Preservation, Rehabilitation, and New Construction Guidelines

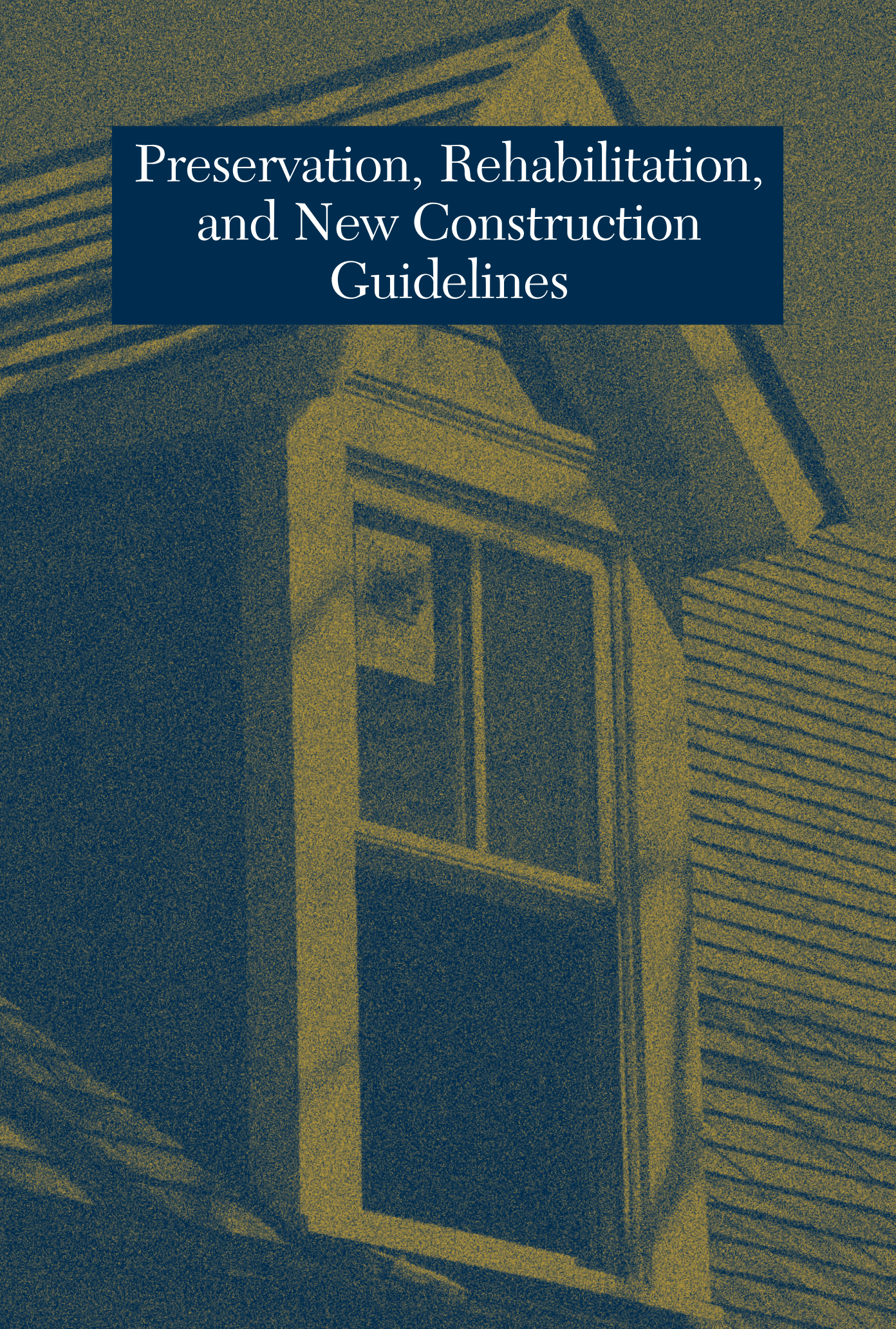

Foundations

Historic Dublin building foundations ranged from rubble stone, which were built of pieces of stone simply picked up and carried to the building site; to cut stone, which was quarried and shaped, usually by hand; to rock-faced concrete block; brick; and poured concrete. Regardless of material, the purpose of each foundation was the same: to carry the weight of the building down into the soil and to spread that weight out so it did not exceed the bearing capacity of the soil.

Builders were careful to set the footings of foundations below the frost line to help ensure that walls would stay plumb and that different parts of a building would not settle at different rates, or that they would not be heaved and cracked by freezing soil.

On some buildings, the foundations rose only slightly above ground level and often were concealed by the building's siding. On others, higher foundations became part of the building's visual character.

As planning goes forward for maintenance or rehabilitation of a building, the following rules of thumb will help the foundation continue to do its job.

Recommendations

1. Watch for areas where a build-up of soil, old plantings, or paving materials may have created a slope that lets rain or meltwater flow toward the foundation rather than away from it. If there is such a condition, re-slope the soil or paving material so there is a positive slope away from the foundation.

2. Be sure that downspouts are either connected into underground drain lines or that they empty onto splashblocks that carry water away from the building. If the building has underground downspout drains, be sure that both the downspouts and the drains are clear and free-flowing. If they leak or are plugged up, they can concentrate water around the foundation to the extent that the soil liquifies and loses its bearing capacity, possibly resulting in settling or cracking of the foundation.

3. Avoid piling mulch, firewood, or other materials against foundation walls, and be sure that vines and plantings don't grow on or too close to the foundation. All of these can cause moisture retention in the foundation wall. A space of at least a foot from plantings or other materials will help provide air circulation to keep the foundation wall dry.

4. Avoid cutting openings in foundation walls to create basement windows or doors. If such openings are necessary, get good advice from an engineer or other professional about how to do this work without weakening the foundation.

5. Avoid painting or stuccoing the exterior of a foundation. Doing so can significantly change the appearance and character of your building, and these treatments can trap moisture behind them, possibly causing deterioration of the foundation material. Previously-painted or -stuccoed foundations, however, should be kept that way, as long as they do not show evidence of moisture retention.

(Photo 44) At 29 South High Street, the foundation is built of roughly-finished local stone. The top course is called the water table. It has a sloping top and it projects from the wall to keep dripping water away from the foundation.

(Photo 45) The house at 167 South High Street has a rock-faced stone foundation with a smooth-finished water table. In this building the high foundation is purposely used as part of the architectural design.

(Photo 46) A rock-faced concrete block foundation supports the house at 53 North Riverview Street. This material was used to simulate the cut stone that was common in earlier buildings. Note the repetitive pattern in the surface of the blocks.

(Photo 47) The house at 63 South High Street has downspouts and splashblocks properly employed to ensure that as little water as possible gets into the foundation.

(Photo 48) Also at 63 South High Street, placement of foundation plantings away from the wall helps ensure adequate air circulation to avoid moisture accumulation in the foundation and lower building wall.

Exterior Materials

Exterior materials on buildings in Historic Dublin include traditional materials such as brick, stone, and wood. The great range in age of the buildings in the district has resulted in an equally great range in building materials.

Most of the older buildings in the district have retained their original exterior materials. In some cases, original wood siding has been replaced with compatible new wood siding that has faithfully duplicated the appearance of the original. There is relatively little use of inappropriate replacement materials such as vinyl or aluminum siding. Older wood siding is found most commonly as beveled siding, but it appears in other forms such as shiplap, shingle, and board-and-batten. At 63 South Riverview Street, historic wood siding was finished to look like cut stone blocks.

Brick and stone are the most common types of masonry in Historic Dublin, and there are some historically-stuccoed surfaces as well. These buildings, like those of frame construction, have retained their exterior materials largely intact, and they generally have avoided damage from abrasive cleaning or improper tuckpointing.

Newer buildings (generally built after World War II) reflect the designs and materials of their time. Concrete block, stucco, and various types of wood and other siding have been widely used, and generally these buildings fit into the streetscape very well in terms of the color, texture, and detail of their exterior materials.

(Photo 49) The building at 18 South High Street combines two types of masonry construction: random ashlar stone on the first floor and brick on the second.

(Photo 50) Shaped shingles and flush shiplap siding are two types of wood siding at 75 South High Street. They give the building wall a distinctive texture.

(Photo 51) Unique in Historic Dublin, the house at 63 South Riverview Street has horizontal wood siding scored to resemble stone blocks. This was a common technique in early architecture (George Washington's Mount Vernon has the same treatment), with sand often added to the paint to impart a stone-like texture.

(Drawing 1)

Traditional Wood Siding Types

BEVELED SIDING

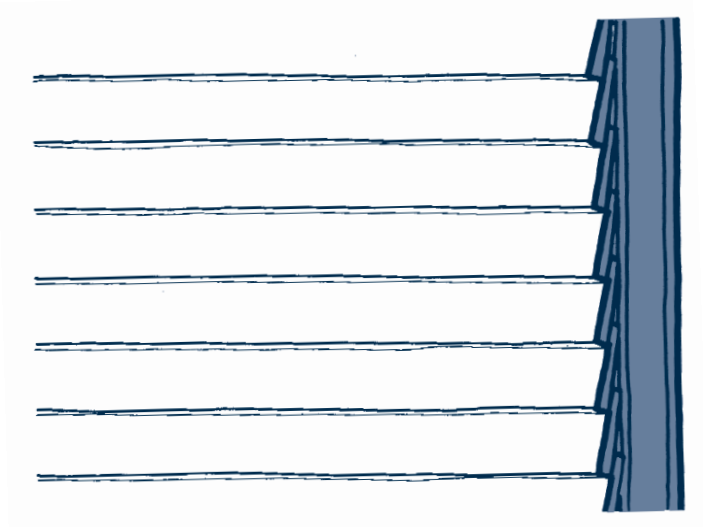

SHIPLAP (DROP) SIDING

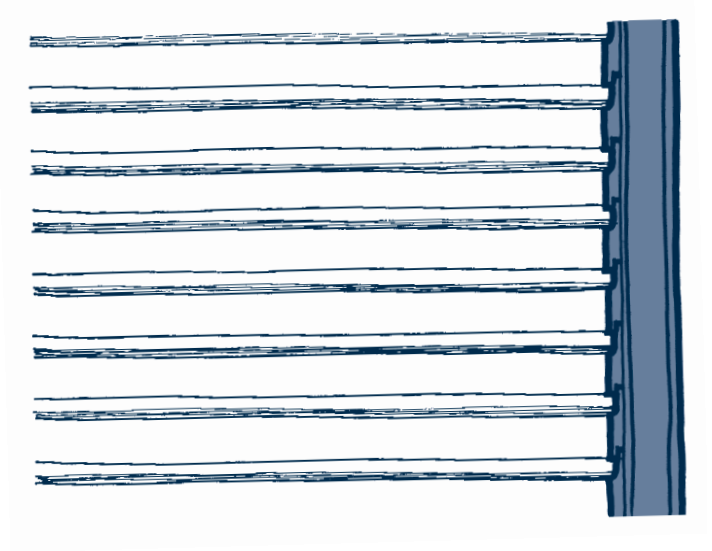

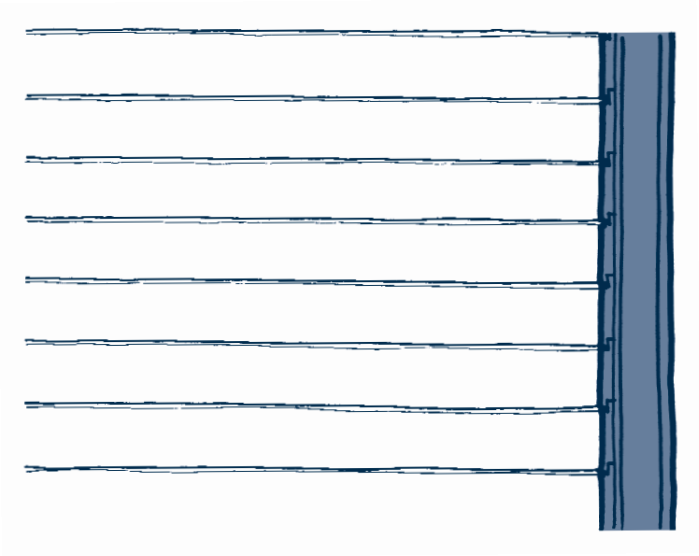

FLUSH SHIPLAP SIDING

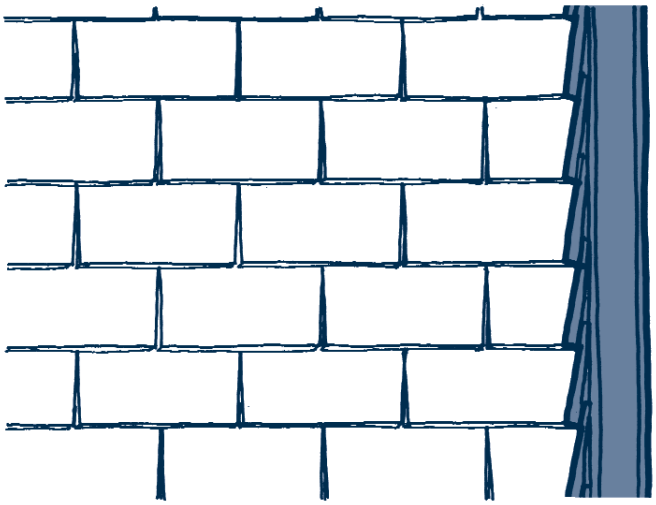

SHINGLES

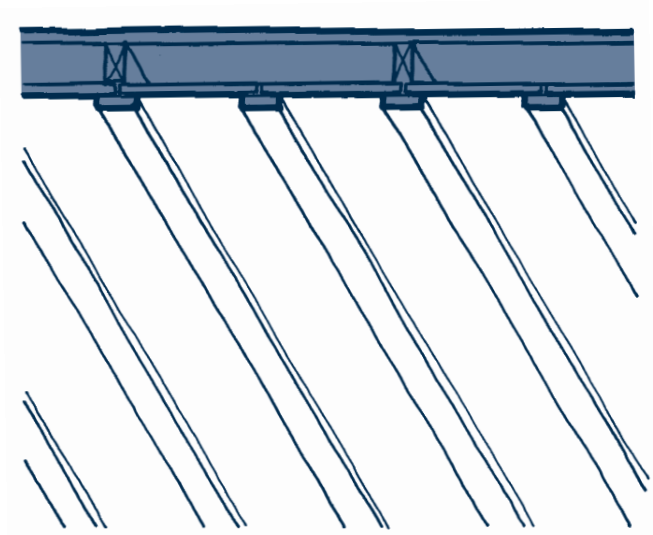

BOARD-AND-BATTEN SIDING

Recommendations

Wood Siding

1. Existing historic wood siding should be retained and repaired as required. Whether in the form of beveled siding, shingles, board-and-batten, or plain flush siding, these traditional types of wood siding give Historic Dublin buildings a texture and level of detail that is an important part of the district's character. Most such siding is painted to weatherproof the siding, and painted surfaces should be kept well-painted.

2. If paint consistently blisters or peels off wood siding, look for sources of moisture such as leaking gutters or downspouts; leaking supply or drain pipes on the interior; wall insulation with a faulty or non-existent vapor barrier; or ground moisture rising into the siding. Any such conditions should be corrected and the siding allowed to dry out before painting again.

3. It is the policy of the Architectural Review Board that, when siding is used on a building, wood is the only approved siding material. Repairs to damaged existing siding should be done with new wood that exactly matches the appearance of the existing. Historic wood siding should never be covered over, nor should it be removed and replaced with another material such as vinyl or aluminum siding. Doing so is inappropriate because it significantly alters one of the most important character-defining features of a frame building, its exterior surface.

4. Only wood siding should be used on new buildings, additions to existing buildings, or new garages and outbuildings. The siding should be used in one of its traditional forms: shingle, board-and-batten, shiplap, or beveled siding.

(Photo 52) In addition to new horizontal siding, the building at 56 North High Street has two types of shaped shingles, another technique for giving a building a unique look and texture.

(Photo 53)
At 182 South High Street, new construction with wood shingles is consistent with the traditional kinds of wood siding used in Historic Dublin.

(Photo 54)
The recently-built rear wing at 6 South High Street has an exterior of horizontal wood siding. Though a modern material, it fits well into the character of Historic Dublin.

(Drawing 2)

WOOD SIDING REPAIR TECHNIQUES

STEP 1

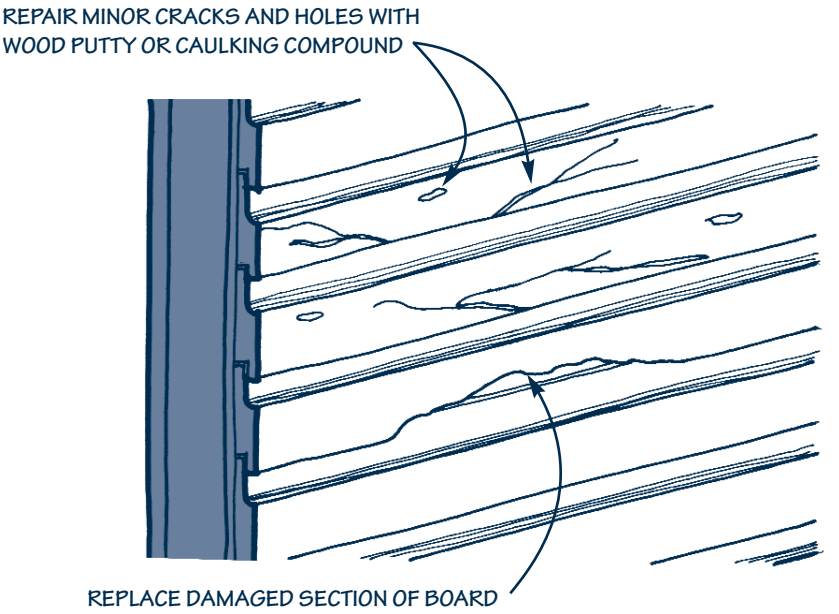

STEP 2

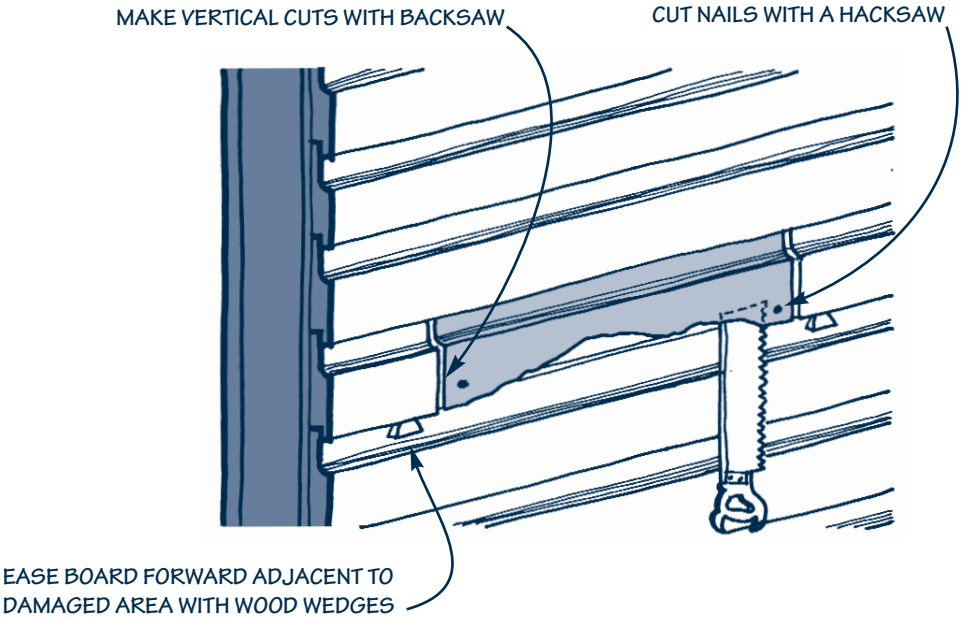

STEP 3

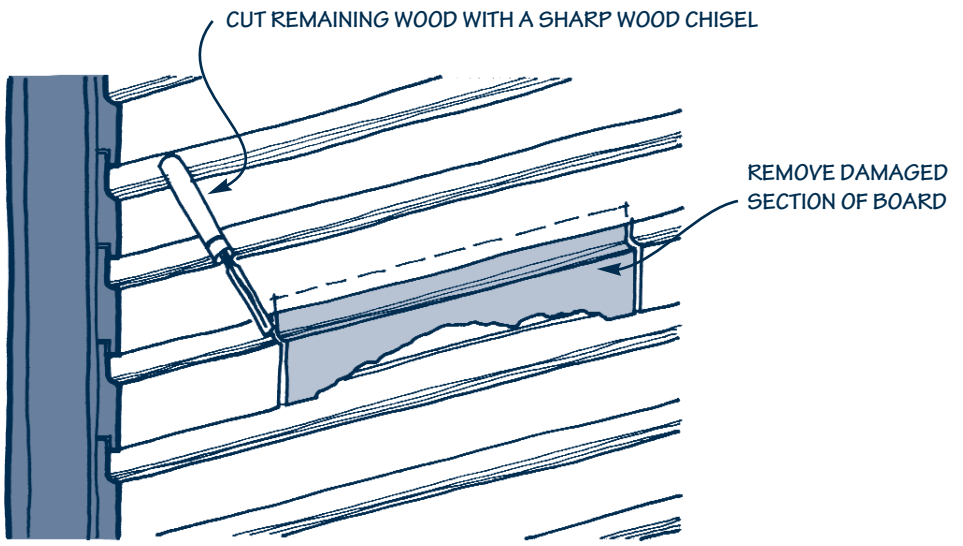

STEP 4

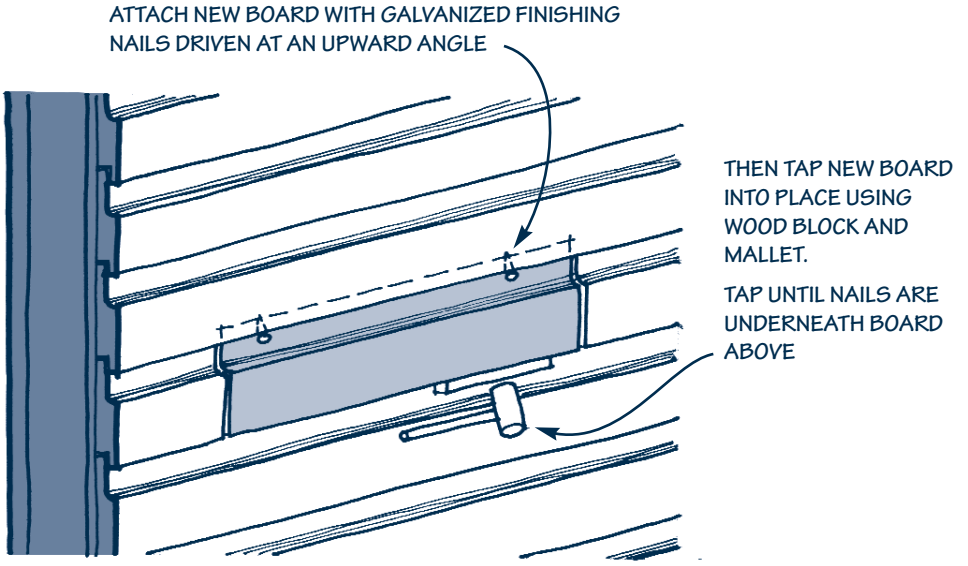

STEP 5

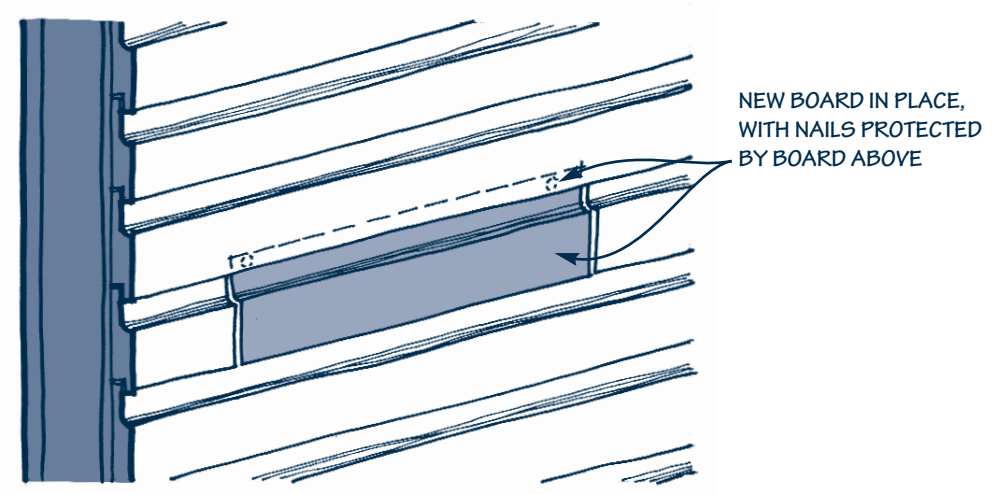

Recommendations

Masonry

1. Historic brick and stone should not be cleaned unless it can be shown that the soil on the masonry surface is actually causing damage or moisture retention. A darkened, weathered appearance is a natural consequence of aging, and money spent on masonry cleaning can usually be better used elsewhere.
2. If the decision is made to clean a masonry building, use the gentlest effective means. Hand-scrubbing with a natural bristle brush and plain water may be effective. There are also gentle detergents that can do the job if plain water does not. For more stubborn dirt, chemical cleaners can be helpful, but they (or any other cleaning method) should be tested in an inconspicuous area before cleaning proceeds. Regardless of cleaning method, avoid any application or wash pressures over 300 pounds per square inch, to avoid abrasive damage to the masonry. Whatever cleaning method is chosen, have it tested and the work done by a competent contractor with experience in testing and cleaning for historic buildings.
3. Avoid sealers such as silicone, or any treatment intended to "waterproof" the masonry. The absorption and evaporation of moisture during varying weather conditions is natural for a masonry wall, and waterproofing treatments can interfere with this process and cause moisture to get trapped inside a wall.
4. Masonry which has been painted in the past should remain painted, since removal of paint can be difficult and damaging. However, walls that have not been painted in the past should remain unpainted.
5. Pointing of masonry should be done in a way that duplicates the color, texture, joint tooling, and physical composition of the building's historic pointing. Avoid high-cement mortar (more than about 1/2 part of cement, by volume), since it can create a rigid framework that can cause cracking and spalling of the soft brick and limestone typical of Historic Dublin. Some prepared mortars have about a 1:1 ratio of cement and lime, but this generally creates too hard a mortar for older masonry and should be avoided.
6. The re-pointing mortar should consist, by volume, of one part lime, three to five parts sand, and as little Portland cement as is needed to make a durable mortar – but no more than 1/2 part, as noted above. This should create a sufficiently "soft" mortar for typical Historic Dublin masonry. Tooling or finishing of mortar joints should match the original tooling as closely as possible. Be especially careful that historically recessed mortar joints remain recessed, and that flush joints are truly flush, without excess mortar smeared on the surfaces of the bricks or stone.
7. Historically, stuccoed surfaces should remain stuccoed. Removal of stucco usually is not recommended, since it is difficult to do so without damaging the underlying masonry. In addition, masonry walls, especially brick, often were chipped and gouged to enable the stucco to adhere, and removal of stucco reveals this damage. Application of stucco is not appropriate for a wall which has not been previously stuccoed, since this significantly alters the character of the wall.

(Drawing 3)

MASONRY RE-POINTING

PROPER RE-POINTING TECHNIQUE

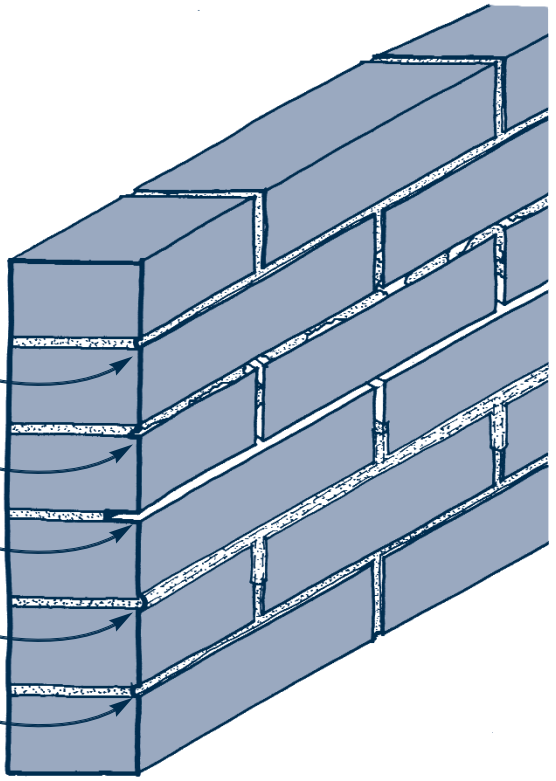

IMPROPER RE-POINTING TECHNIQUES

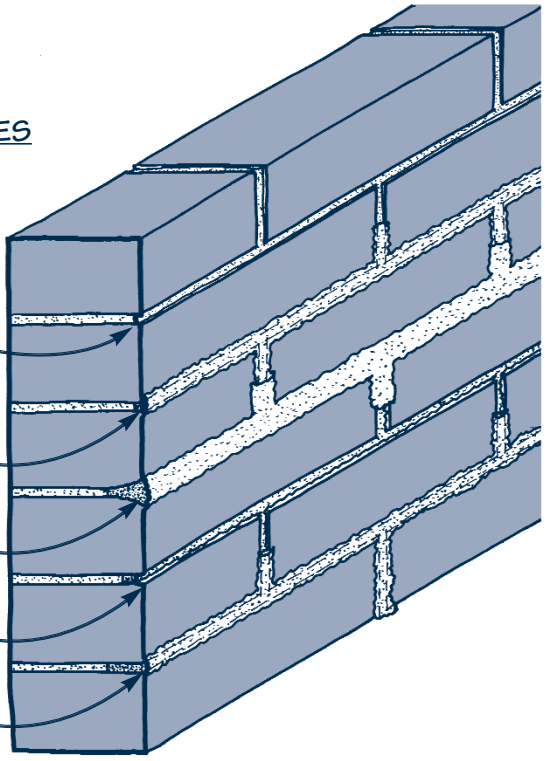

Recommendations

Contemporary Materials

1. Contemporary materials should be used only in traditional ways in Historic Dublin. Wood, for example, should be employed in traditional forms of wood siding such as beveled siding, board-and-batten, and wood shingles. Avoid incompatible contemporary types of wood siding such as rough-sawn, diagonal, plywood panel siding, or other clearly modern types. Also avoid contemporary materials that simulate but are not the same as traditional materials; these include various products intended to look like wood siding, shingles, or other traditional materials.

2. Similarly, use traditional forms of masonry, even though most masonry walls today are veneer on block or frame walls and are not traditional bearing walls. Of the various contemporary masonry materials, brick tends to have the most appropriate appearance for building walls; stone tends to be most appropriate for foundations, and sometimes for chimneys. Stuccoed surfaces sometimes were used historically on flat walls, but this was a fairly rare treatment and should generally be avoided today unless repair is being done on, or an addition is being made to, a historically-stuccoed wall. Foundations should not be coated with any stucco materials or treatments, nor should stucco or a similar material be used to simulate stone foundation walls.

3. Consider preparing samples of new exterior materials prior to selecting them for a building. This will provide an opportunity to verify that they achieve the desired effect and that they are compatible with the area's historic materials.

Commercial Building Storefronts

Most commercial buildings in Historic Dublin were built in residential forms, and true commercial buildings are not very numerous. Some do exist, however, and they are an important part of the streetscape.

Commercial buildings had some common characteristics, most notably their storefronts. From about the mid-19th century until well into the 20th, commercial storefronts took a fairly consistent form that included a bulkhead, or low wall, at street level, with display windows above it. These windows evolved along with glass-making technology, changing from multi-paned designs earlier in the 19th century to single large pieces of plate glass later. The purpose of storefront windows was both to display goods and to admit natural light to the interior. In the typical late 19th or early 20th century storefront, a transom was placed above the display windows. A transom is an additional narrow window with the purpose of admitting even more natural light. Toward the middle of the 20th century, storefront designs often eliminated either the bulkhead or the transom or both, resulting in a storefront that was

almost entirely a display window. Most storefronts from this period had much plainer designs than earlier ones, employing simple rectangular window and door openings in flat walls, without much, if any, decoration or trim.

Doorways on commercial storefronts from any period were sometimes centered but could also be off-center; and they could be flush or recessed. Commercial building doors usually had glazing in the upper half, or sometimes the whole door was glazed.

Recommendations

1. Retain historic storefront materials such as bulkheads, display windows, transoms, and trim. If these elements are damaged or deteriorated, they should be duplicated in replacement materials as close to the originals as possible.
2. Avoid removing or downsizing storefront display windows. These are important streetscape elements that provide a visual connection between the street and the interiors of buildings; removal or downsizing these windows creates a "blank wall" that adversely affects the streetscape's character. If a business does not need display windows and desires a level of privacy, blinds, drapes, or screens should be considered. These can do the job without requiring permanent changes to storefront windows.
3. Avoid applying trim or ornamentation that a commercial storefront would not have originally had. In general, older storefronts had more details and trim than more recent ones, and this difference in design should be respected. Similarly, "theme" restorations such as Colonial or Bavarian should be avoided, since they impose a character the storefront never had.
4. Avoid materials such as diagonal wood siding, all-brick storefronts, vinyl or aluminum siding, mansards, and fixed metal canopies. These would not have been used historically on commercial buildings. See the guidelines for awnings if these are being considered for a storefront.

(Photo 55) One of the few traditional commercial storefronts in Historic Dublin is at 32 South High Street. Each display window has a transom, as does the entrance door. Beveled siding is used below the display windows instead of a paneled bulkhead.

(Photo 56) This new commercial storefront at 50 South High Street was designed in a traditional pattern: a recessed entry, large display windows, and a paneled bulkhead below the display windows.

(Photo 57) At 35 South High Street, a small auxiliary structure was added to the original house to accommodate a commercial use. As was typical for commercial structures, the addition was placed at the edge of the sidewalk.

Commercial Use of Residential Buildings

Historic Dublin is unusual because such a large percentage of its buildings are residential in form but are used for commercial purposes. Some of these buildings were originally built for commercial uses such as taverns, while others are recent conversions of former houses. In much of Historic Dublin, the district has retained a residential and small-town scale and character because the commercial conversions have not resulted in major changes to residential structures.

It is likely that some buildings still in residential use could be converted to commercial uses in the future; or that owners of residential buildings currently in commercial uses will want to make improvements to their buildings. If either of these should happen, it is important that the buildings' residential character be retained, since this character is such an important part of what makes Historic Dublin visually attractive and desirable as a place to live and work.

Recommendations

1. Avoid alterations to windows and doors on residential buildings used for commercial purposes. Retain existing residential-scale windows and doors. Historic Dublin has many examples of residential-style windows that have been successfully used as commercial display windows.
2. Be sure that commercial signage is in scale with a building and that it uses a design and materials compatible with the building's design. Refer to the sign

guidelines for further suggestions, and the appendix for the Historic Dublin Sign Guidelines.

3. Use signs as the primary means of indicating that a building has a commercial use. Avoid using incompatible colors (see the color guidelines) or applied materials to draw attention to the commercial use.
4. Any additions to buildings to accommodate growing businesses should respect the character and scale of the original building. Refer to the guidelines on additions for a discussion of design considerations.
5. Think carefully about the location and size of mechanical systems. Rooftop equipment and ventilation hoods should be located as unobtrusively as possible. Where feasible, try to locate such equipment somewhere else on the site instead of on the building.

(Photos 58 and 59) Biddie's Coach House at 76 South High Street and Donato's Pizza at 6 South High Street are residential-form buildings adapted to commercial uses. In both cases, the commercial conversions required minimal alteration, and the residential character of each building still is readily apparent.

(Photo 60, above) This original window at 76 South High Street is residential in design and proportion, but it serves well as a display window for the commercial use in the building.

Doors and Entrances

Because they were built over a long period of time, Historic Dublin's buildings have many different kinds of doors and entrances. They include deeply recessed paneled doors, without glazing but with simple transoms, found in some of the earliest houses; ornate paneled and glazed doors from the late 19th and early 20th centuries, often with full sidelights and transoms; simple glazed or unglazed wood doors and plain entrances in early 20th century vernacular houses; and solid or hollow-core wood doors typical of mid-20th century Ranch houses.

Doors and entrances often are major architectural elements because they are a focal point in the design of a building – the point at which one enters and leaves. Some architectural styles, such as the Federal style, treat doors and entrances very plainly, with little or no ornamentation or anything else to draw attention. Other styles, especially later in the Victorian period, drew attention to doors and entrances through use of carved and paneled wood doors; sidelights and transoms, sometimes with frosted or colored glass; and entrance ornamentation such as columns, pilasters, brackets, and other elements. This focus of attention on doors and entrances continued through the Colonial Revival style period in the early 20th century. From that point on, however, doors and entrances became much more simple in both residential and commercial buildings. In the period after World War II, doors commonly had little or no glazing, and entrances were little more than unornamented rectangular openings.

(Photo 61, left) By the late 19th century, glazing in entrance doors had become common. In addition doors themselves were much more ornate than in the past and had become design elements in themselves. The tight dimensions of this entrance at 22 North High Street made it impossible to use sidelights, but there is just enough room for a narrow transom above the door.

(Photo 62, right) This entrance dates from around the middle of the 19th century and is typical of that period. The entire entrance is more heavily ornamented and is much more prominent than earlier ones. The door still is without glazing; it is flanked by sidelights and surmounted by a transom. The wood storm door is an early 20th century element that blends well with the earlier components.

Whatever the era of a building, the original design intent of both primary and secondary doors and entrances should be respected.

Recommendations

1. Avoid removing historic doors or entrance elements. Major alteration of original doors and entrances should not be made, since such work can significantly change a building's character. This is true for both primary and secondary entrances. Deteriorated or damaged elements should be replaced with new ones that match the originals as closely as possible.
2. If interior alterations make an existing entrance redundant, do not remove the door and entrance. This could cause a major change in a building's character. A more appropriate approach is to leave the door and entrance intact on the exterior while covering it over with drywall or other material on the interior.
3. Avoid treatments that attempt to "dress up" a door or entrance or give it a character it never had. Applied ornamentation, window glazing using stained or patterned glass or creating a multi-paned effect, and salvaged older doors of inappropriate design all can change the character of a building.
4. Retain any surviving historic storm doors; these typically were made of wood and had one or two areas of glazing which sometimes could be removed and replaced with screens during the summer. Such doors usually are either original to a building or were designed to be compatible with the building's architecture. When installing new storm doors, select ones of simple design and made of wood, if possible. The most appropriate design is one with a full-height glass section that permits viewing the main door. Avoid storm doors with decorative features such as scalloped window edges, strap hinges, or "crossbuck" designs. Choose a color compatible with historically appropriate colors already on the building.

(Photo 63) The house at 109 South Riverview Street has a traditional early 19th century entrance and door. There is a small transom without sidelights; the six-panel door has no glazing; and the entrance trim is paneled and is deeply recessed to accommodate the thickness of the brick wall.

(Drawing 4)

APPROPRIATE DOOR STYLES

WOOD PANEL DOORS

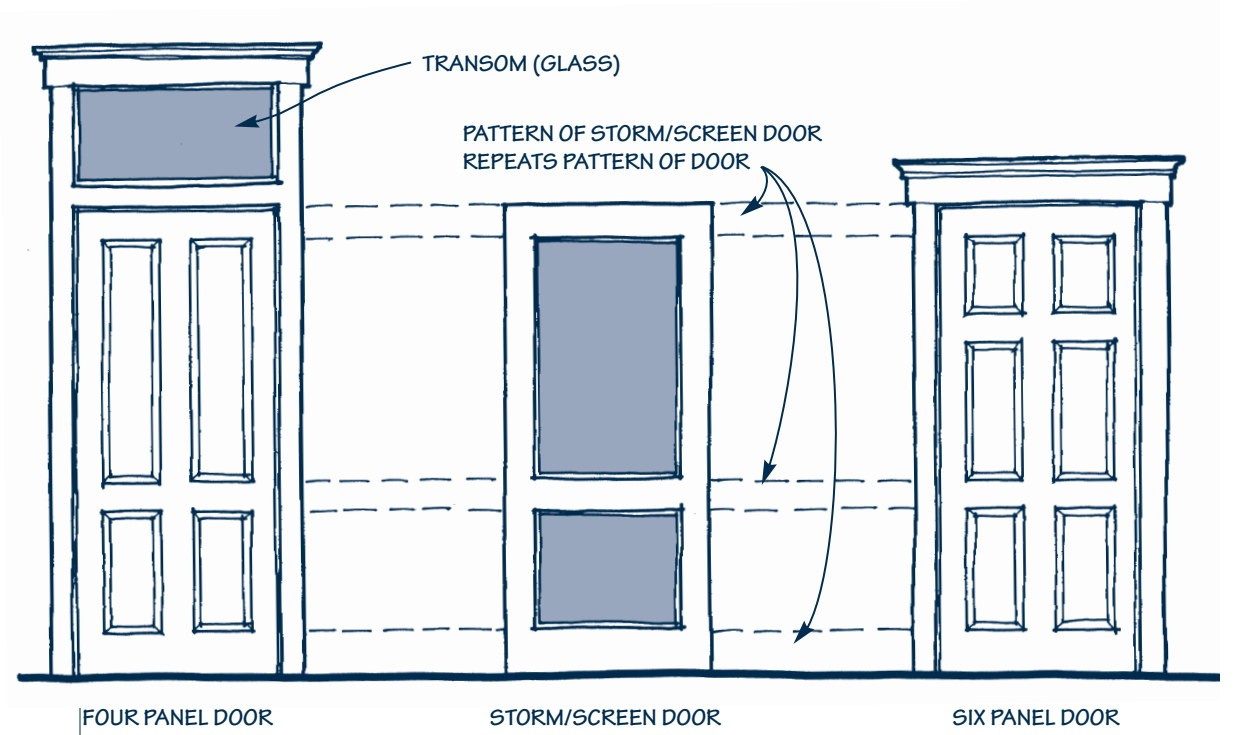

CRAFTSMAN STYLE DOOR

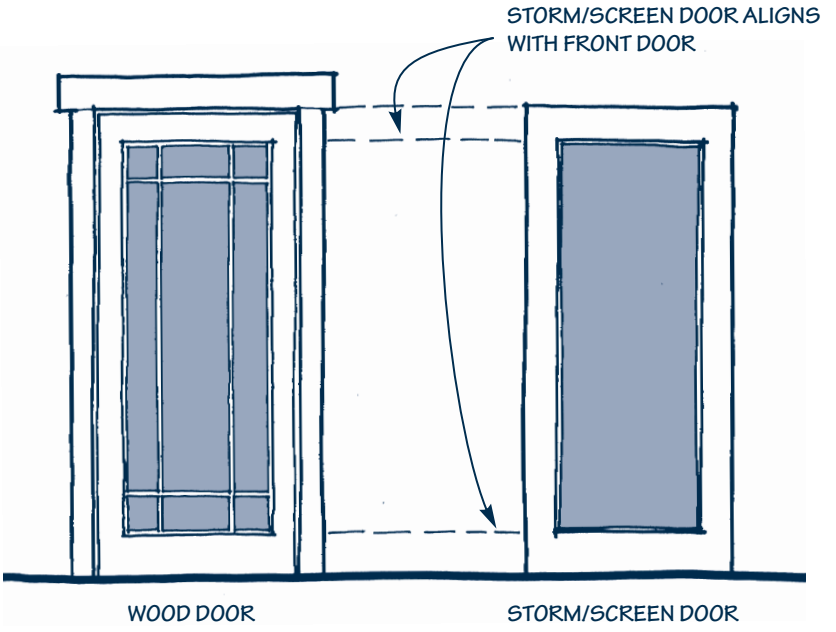

GLASS DOORS

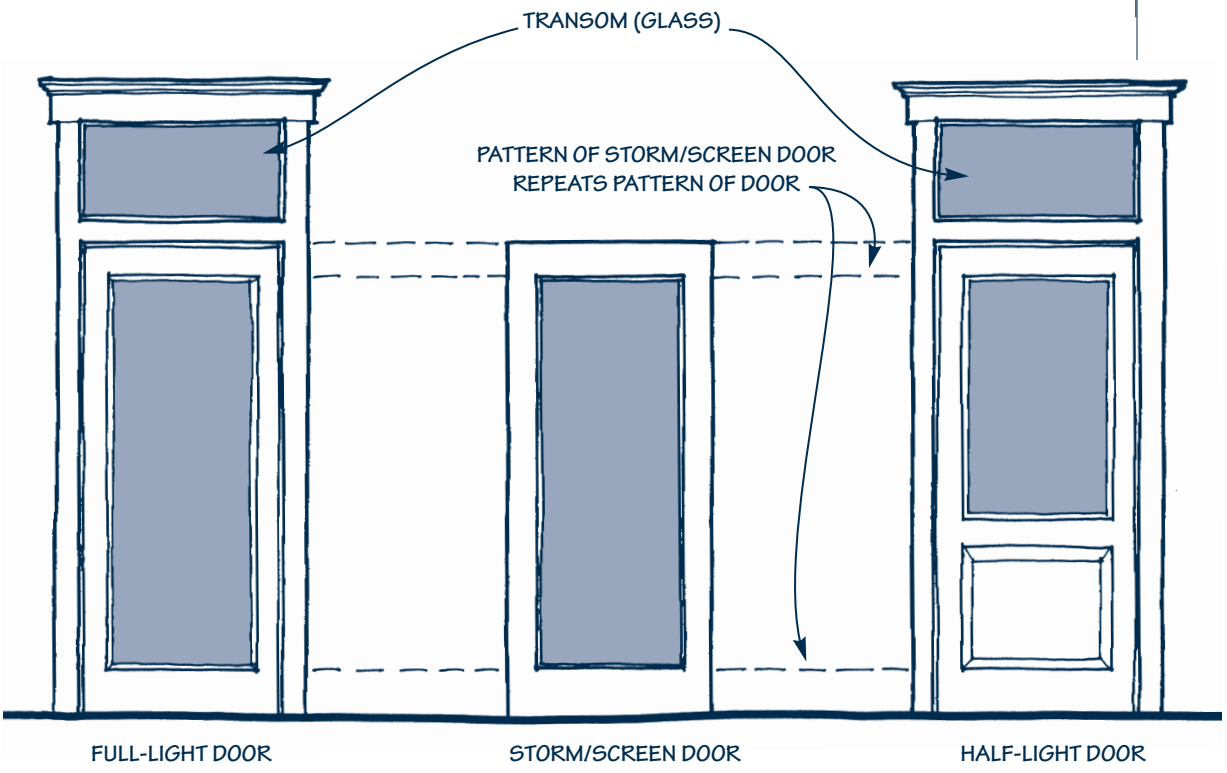
TRANSOM (GLASS)
PATTERN OF STORM/SCREEN DOOR
REPEATS PATTERN OF DOOR
FULL-LIGHT DOOR
STORM/SCREEN DOOR
HALF-LIGHT DOOR

Porches

Porches were important features on many Historic Dublin houses. They did not become common architectural elements until about the mid-19th century, and since then they have played both ornamental and practical roles.

Some porches were very simple, consisting of just a stoop and a handrail at the front entrance, sometimes with a roof or canopy and sometimes not. These could date from any period and in Historic Dublin can be found on some of the oldest and some of the most recent houses.

From the mid-19th century until well into the 20th, porches often were major architectural elements that could be considerably more ornamented and decorative than the house itself. Lathe-turned and saw-cut columns, panels, brackets and other elements became common on many porches.

In the 20th century, from about 1915 on, porches generally were simplified and more integrated into the design of the house. In this period, simple square or tapered columns became common, as did simple paneled handrails or handrails with balusters and rails. It was common to find such porches built onto older houses that either did not have porches originally or where original porches had been removed and replaced.

In some cases, 20th century porches were recessed under the slope of the roof or into the mass of the house, thus making the porch much more an integral part of the house's design rather than an added-on feature. This form of porch was particularly common on Bungalow and Craftsman style houses.

Recommendations

1. Retain original porch elements as much as possible; try to duplicate them in kind if they are damaged, deteriorated, or missing. Avoid removing original elements such as turned columns, decorative elements, or tongue-and-groove ceilings. Wrought or cast iron supports should not be used to replace original porch columns unless such iron elements were part of the original design; the same is true for wrought iron railings.
2. Because many porches project out from the wall of a house and are very exposed to the weather, watch for signs of deterioration due to moisture: streaking or staining; mildew or dry rot; and moss growth or peeling paint. Be sure there are no gaps or leaks in the flashing at the point where the porch roof abuts the house wall; and watch for overflowing gutters or leaking downspouts that might spill water onto porch elements or into the porch's foundation.
3. Avoid enclosing porches to create permanent interior space. This alters the open character a porch is intended to have and effectively moves the building wall forward from its original plane. Such work also often results in loss of or damage to decorative porch elements which are an important part of a house's architectural character. See the guidelines on additions when adding space to a building.

4. If a porch is to be added where one is missing or where there has not been a porch in the past, use a simple, contemporary design. Observe the characteristics of original porches on similar buildings – height, materials, roof slope, width – and use these to develop a design. Avoid ornamentation such as spindles and scrollwork unless they were traditionally used on the porches of similar buildings.

(Photo 64) The ornamental porches on the building at 75 South High Street are important design elements. The porch design, here visible on the rear wing porch, includes shaped columns and scrollcut ornamentation. Porches like this became common from the mid-19th century on.

(Photo 65) Modest late 19th century houses with little decorative treatment often had ornamental porches that added a focal point and imparted a sense of distinction. This home at 55 South Riverview Street is a good example. It has only small amounts of scrollcut trim but sports lathe-turned columns and spindles. It is important to retain features such as porches as part of a building's character.

(Photo 66) Early 20th century porches generally were simpler in design than those of the late 19th century, but they still were important design elements that added character and visual interest to the houses they adorned. The porch at 45 North High Street is an example; the house is very unassuming but has a strong presence along the streetscape because of its front porch.

Windows

Windows are important elements in a building's design, and different architectural styles have placed varying emphasis on them. This variation can be seen in Historic Dublin, where there is great variety in windows because of the great range of age in the district's architecture.

Window design in part reflected changes in glass-making technology (see the section on storefront windows). Houses in the Federal style, for example, used multi-paned windows in designs such as 6-over-6 or 9-over-9 because glassmakers at the time (before 1850) could make only small pieces of glass suitable for window use. As the technology of glass evolved, large panes could be made, so later styles such as the Italianate and Queen Anne styles (from the 1850s to the end of the 19th century) employed windows with 1-over-1 or 2-over-2 design. Late in the 19th century, large single panes became available, and these often were used in Queen Anne style houses. Early 20th century styles often had a multi-paned upper sash and a single-pane lower, and styles such as the Colonial Revival went back to traditional multiple panes in both sash. Virtually all of these traditional windows were double-hung: two separate window sash sliding in parallel tracks. The upper sash was placed outside of the lower sash, and they overlapped at the meeting rail, which provided a weather seal.

Sometimes older buildings received new window sash, usually because the originals had deteriorated beyond repair. The new window sash usually were designed to fit into existing frames. For this reason, Federal style houses, for example, could occasionally be found with 1-over-1 or 2-over-2 sash, or early Italianate houses might be updated with 1-over-1 sash, replacing original 2-over-2 or 4-over-4 windows.

Ornamentation or trim around the windows varied with style, too, but usually was left in place during window replacement. Victorian-era buildings, from about the 1850s until the turn of the 20th century, usually had the most ornate window trim, which took the form of carved stone lintels and sills; stone, cast iron, or sheet metal hoodmolds; and sometimes full window frames of wood, stone, or sheet metal, which projected from the face of the building. Much simpler and less ornamented trim was used before the Victorian period and in the early 20th century.

Recommendations

1. Retain and repair existing original or older windows. Because they are so numerous and so highly visible, the windows are a major part of a building's character. Keeping them is one of the most important ways to protect that character. Even non-original windows may be of sufficient age and design quality to warrant their retention. Repair should be in kind, duplicating the material and design of the original pieces. The historic glass that survives in many old sash is an important element in a building's character. Retain historic glass and protect it carefully when windows are being repaired.

2. If windows are extensively deteriorated, replacement may be justified. Only the deteriorated windows should be replaced; avoid removing any that are still repairable. Replacement windows should duplicate the appearance of the originals as closely as possible in number of panes, dimensions of sash members, and profile of sash members and muntins. Use the same material, usually wood, as was used in the original windows; avoid vinyl- and aluminum-clad wood replacement windows. The new windows should simulate the operating characteristics of the originals. If the originals, for example, were double-hung, the new windows should look the same, even if only the lower sash opens.

3. Use real through-the-glass muntins, not sandwiched, applied, or snap-in artificial muntins.

4. Avoid enlarging or downsizing window openings to accommodate stock replacement window sizes. Window manufacturers are more numerous and more skilled than in the past and should be able to make windows to fit the openings.

5. To increase energy efficiency of existing windows, consider interior or exterior storm windows. These should be either a single pane or, if they have an upper and a lower pane, the division between the two should be at the meeting rails of the original windows. Some windows may already have historic storm sash, and these should be repaired and retained.

6. If window sash no longer contain historic glass, consider re-glazing existing sash with insulated glass units. This is not possible in every case, but often the sash frame and muntins are thick enough to accommodate insulated glass, which can be as thin as 3/8 of an inch. Use only clear glass.

7. For new buildings or new additions to existing buildings, use wood windows, especially when they are located close to a sidewalk or other public way. In less conspicuous locations, wood windows clad in vinyl or aluminum are acceptable, but all-aluminum or all-vinyl windows are not.

(Photo 67) Window sash often were shaped to fit the opening in the wall, as in this example at 29 South High Street. The two-over-two window has an arched upper sash and a rectangular lower one.

(Photo 68) This simple historic window is at 76 South High Street and is an excellent example of mid-to-late 19th century window design. The distinct offset between the upper and lower two-over-two sash indicates that the sash are double-hung – each can slide up and down in its own track.

(Photo 69) Windows are extremely important components of a building's design. In the building at 54 South High Street, the windows are especially important because of the building's modest scale and its location right at the edge of the sidewalk. This six-over-two double-hung sash window is a hybrid of earlier and later 19th century window types.

(Photo 70) As the 20th century progressed, window-makers moved away from traditional designs and tried new approaches. This corner window, located on a postwar house on Franklin Street, is a modern wrap-around design. It also has vertically hinged panels that open for ventilation, an ancient window design known as a casement

(Photo 71) This window, in a dormer at 182 South High Street, is a good example of an appropriate new window. It has true muntins, it employs traditional 19th century proportions, and it has operable sash of appropriate profile and thickness.

(Photo 72) Traditional wood storm windows usually were designed for compatibility with the buildings on which they were installed. This example at 63 South High Street is a good illustration. Note how it fits snugly in the opening, and how the cross piece of the storm window falls at the meeting rails of the upper and lower sash of the window.

(Drawing 5)

DOUBLE-GLAZING AN OLD WOOD WINDOW

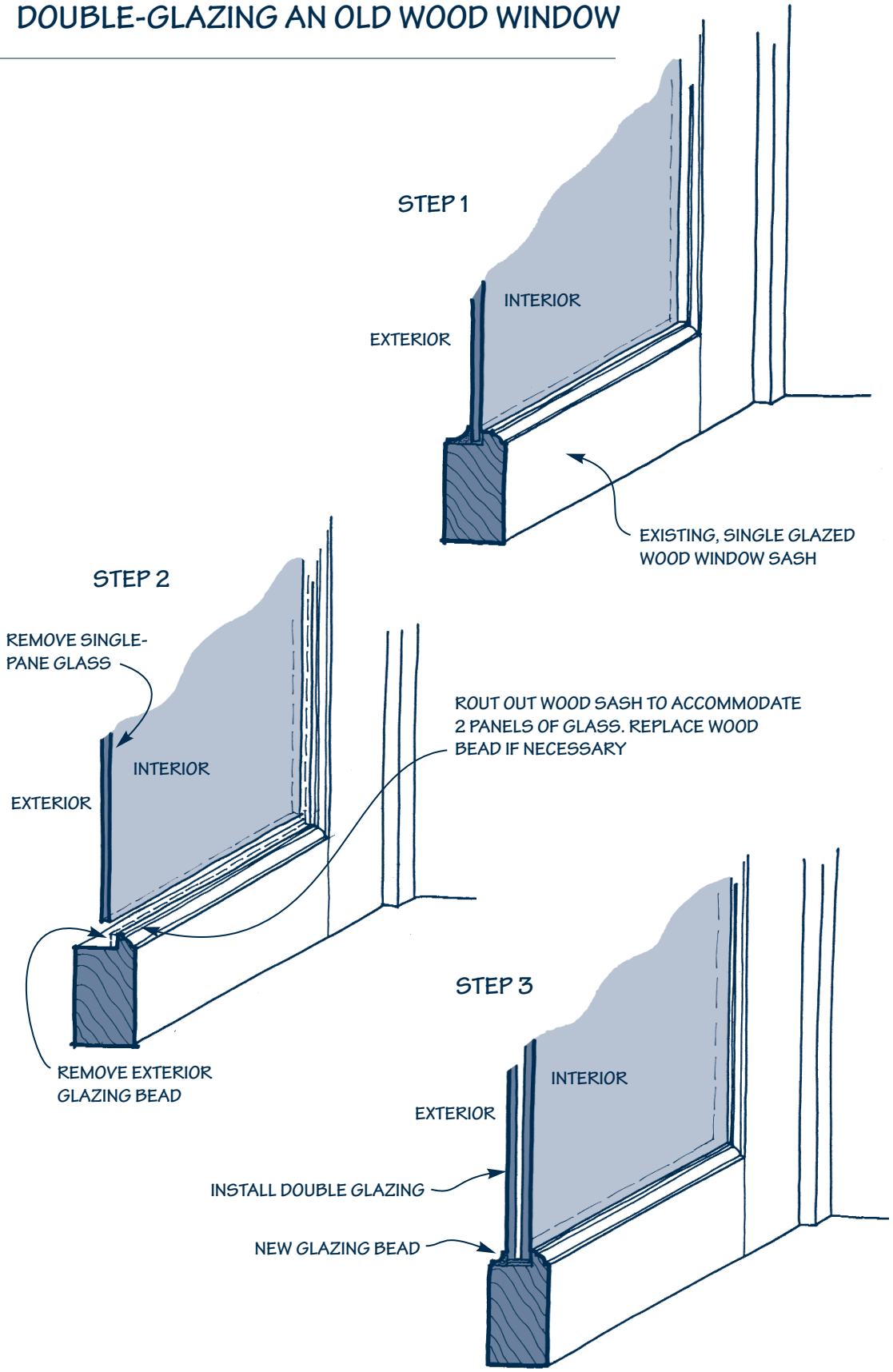

(Drawing 6)

WOOD WINDOW RENOVATION

REPAIRABLE WOOD WINDOW

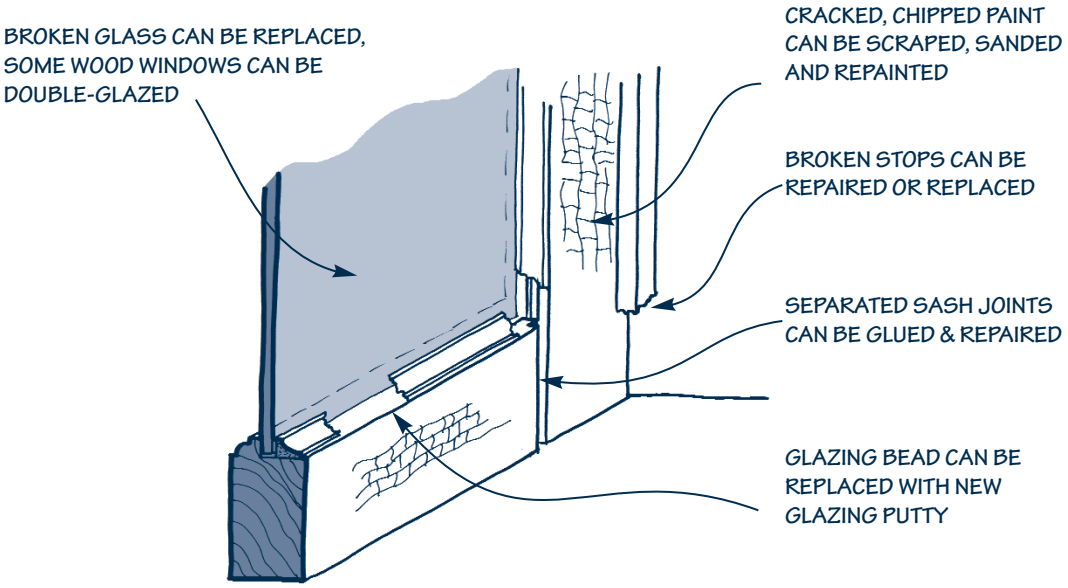

WOOD WINDOW BEYOND REPAIR

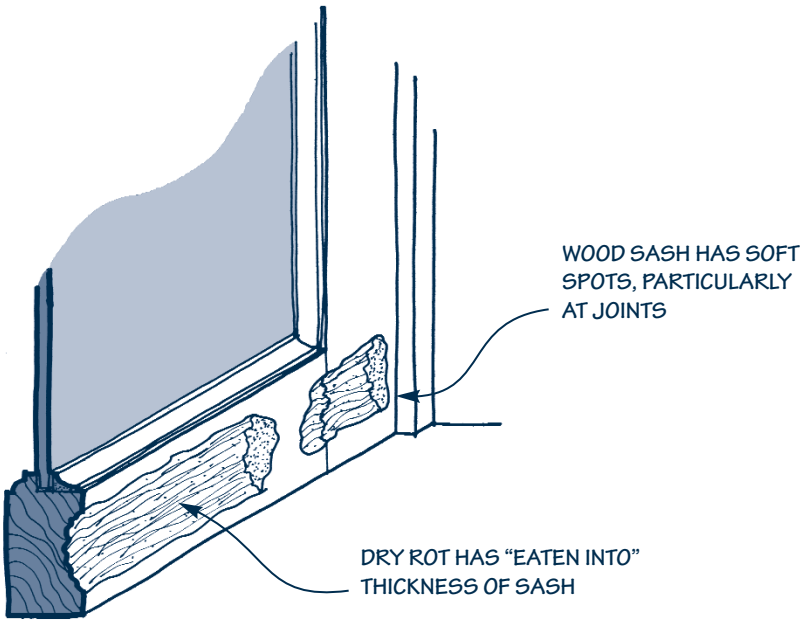

(Drawing 7)

COMPONENTS OF A TRADITIONAL DOUBLE-HUNG WINDOW

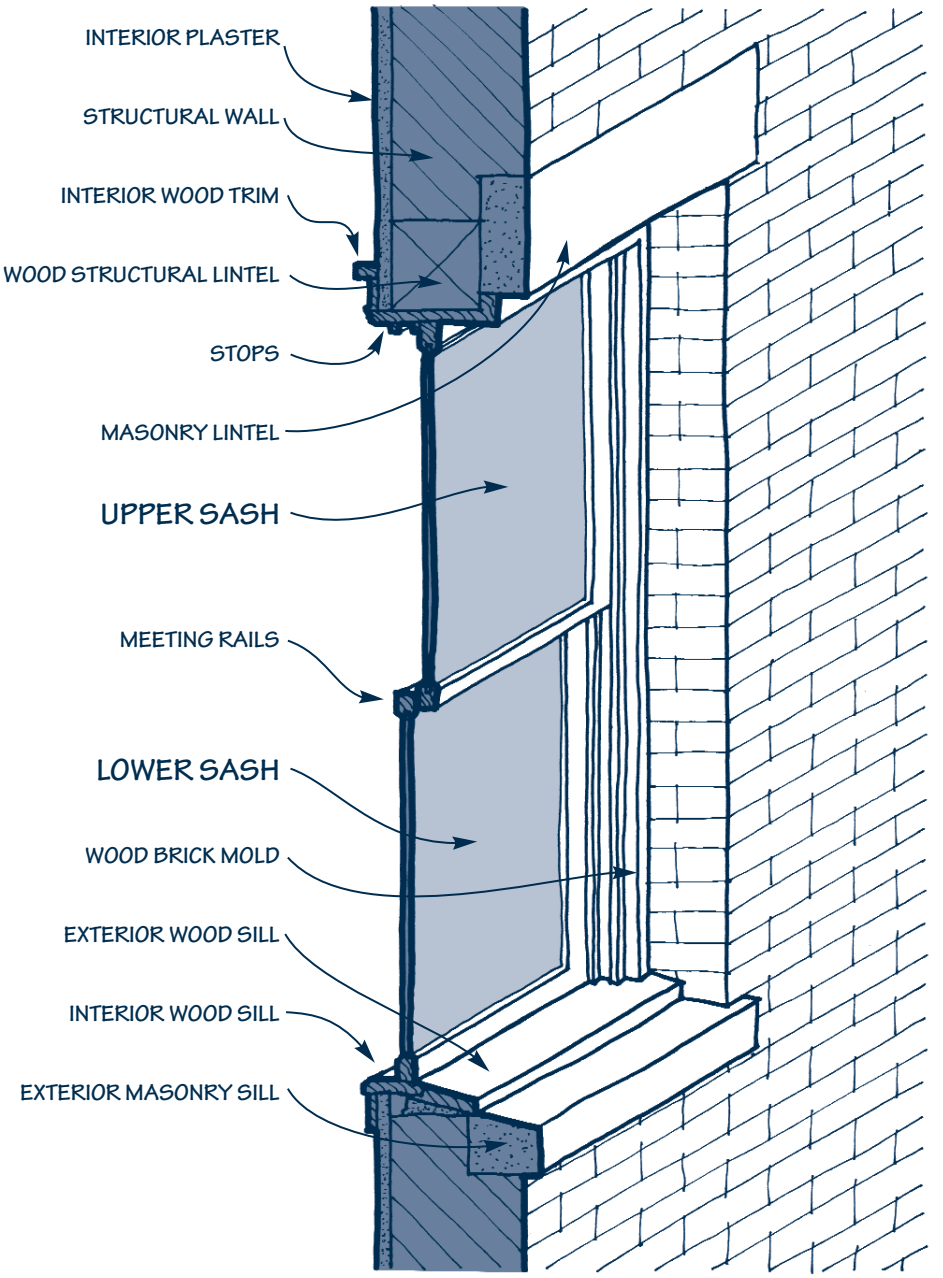

Canopies and Awnings

Awnings traditionally were used for two purposes: at window openings on houses to keep down the interior heat in the summer; and on commercial storefronts to provide both shade and weather protection for the storefront and for people walking along the sidewalk. Upper floor windows on commercial buildings, too, often used awnings for shade. Awnings typically were made of canvas or similar heavy fabric and were mounted on metal pipe frames. Both residential and commercial storefront awnings usually could be rolled up or retracted.

Canopies were attached to buildings to provide similar protection from sun and weather, but they were permanent and were fixed in place (awnings often were removed entirely during cold weather, especially on houses). Some canopies were original elements, particularly on houses, where they sometimes were used to shelter an open stoop.

Recommendations

1. For residential or commercial buildings in Historic Dublin, fabric awnings are an appropriate treatment, but they should have a matte rather than a glossy surface. Avoid fixed, permanent canopies unless it can be shown through research that a building had one in the past and that the canopy design was compatible with the original character of the building and the district.

2. Each window or door should have its own awning, rather than a single full-width awning covering an entire facade.

(Photo 73) The building at 22 North High Street has a good example of an appropriate contemporary awning. Note how it provides shade while concealing as little of the window as possible, and how it is sized to fit only the window opening.

3. Use a traditional flat, sloping awning. Avoid rounded or "bullnose" awnings, except at round-headed window openings, where the rounded awning shape is appropriate.

4. Awning color is important. Manufacturers can provide durable, long-lasting fabric for awnings in a wide range of colors. Make awning color(s) compatible with historically appropriate colors used on the building, but avoid overly ornate patterns and too many colors. A simple pattern using no more than two colors is usually the most appropriate.

(Photo 74) The contemporary storefront at 52 South High Street is shaded by a commercial-style awning of appropriate shape, size, and scale. It covers the entrance and display windows but not the entire building facade.

(Photo 75) Arched awnings are a traditional shape appropriate for side or rear entrances, as in this example on South High Street. For entrances along the sidewalk, however, only flat, sloping awnings should be used.

Roofs, Gutters, and Downspouts

The roof, gutters, and downspouts are an integrated system designed to collect and remove water from a building as quickly as possible. In addition to this practical purpose, these elements are highly visible and thus are important components of a building's visual character.

Historic Dublin roof materials vary, but standing seam metal and asphalt shingle roofs are most common. Standing seam metal roofs are extremely durable and have been in use in Ohio since before the Civil War. Some metal roofs in Historic Dublin probably are replacements of earlier materials such as wood shingles or even slate, but standing seam roofs have a long tradition in the district. Asphalt shingles, and those of similar materials such as fiberglass, usually are a modern replacement of an earlier material, except on more recent buildings, where they may be original. Patterned slate is a common roofing type in Ohio from the mid-19th century on, but it is rare in Historic Dublin. Wood shingle roofs were a common early type of roof, but because of fairly rapid deterioration most were replaced long ago. Examples in Historic Dublin are of fairly recent date.

Most Historic Dublin buildings have gutters to catch water as it flows off the edge of the roof. Gutters typically appear in two designs: half-round, where the gutter forms a semi-circular trough suspended on straps or wires that run under the roofing material; or "ogee" gutters with a flat back and an-S-curve front profile, usually attached by long nails to a vertical fascia board below the edge of the roof. Gutters usually are made of either painted galvanized metal or aluminum with a factory-applied paint finish.

Downspouts are usually round or rectangular in cross-section and drain directly out of the bottoms of the gutters. They usually are attached to the wall of the building, and at ground level they drain either into underground drain lines or onto splash-blocks which direct the water away from the building.

Dormers and skylights are common building elements that create interruptions in the roof surface. When properly built and maintained, these elements are usually problem-free. They can, however, catch leaves and branches and create a debris pile that retains moisture, and they require flashing to provide a moisture seal where they penetrate the roof. Flashing, which usually is made of sheet metal, is part of the roof at dormers and skylights and also at chimneys. It extends from the vertical wall of the projecting element down to and under the roofing material to provide a waterproof seal. Valleys, where different roof angles meet, usually are lined with flashing under the roofing material.

All parts of this water removal system must be in good condition or they cannot do their job. Get in the habit of inspecting the various parts on a regular basis. It is not necessary to climb a ladder – a look at them from the ground or the attic, especially when it is actually raining, can provide some quick clues about possible problems. Water should drain quickly from the roof; there should be no open joints or loose pieces in any flashing; all the water should be collected by the gutters; and the water should drain out of the gutters through the downspouts.

Recommendations

1. Watch for possible roof problems. Are there any bulges or dips in the roof? Older roofs often have some of these simply from age, but such areas can cause open joints in metal roofing or can lift shingles to the extent that water gets in; they bear special watching. Interior stains around chimneys, dormers, and skylights usually indicate a flashing problem.

2. Repair and retain existing traditional roofs such as standing seam metal or patterned slate. These have a long history of use in Historic Dublin and are an important part of the district's character. New standing seam roofing materials are available, and they do a good job of matching the design and character of old roofs. Traditionally, metal roofs were painted to avoid rust, with red and black the most common colors, although green also was used.

3. In re-roofing a building that currently has asphalt shingles, keeping it simple is usually the best choice. Avoid staggered-butt or other shingle patterns that try to create an older look. A medium gray color generally is appropriate for asphalt shingles on an older building. For newer buildings originally roofed with asphalt shingles, use medium gray replacements unless the original color is known.

(Photo 76) The standing seam metal roof at 83 South Riverview Street is typical of numerous similar roofs in Historic Dublin. This type of roof has a long history on all kinds of buildings.

(Photo 77) Though less common than other roof materials in Historic Dublin, original patterned slate can still be found. It adds measurably to the character of a building and to the visual quality of the historic district. This example is at 35 South High Street.

4. Keep an eye on the gutters, too. Are they catching the water pouring off the roof, or is water overshooting the gutters or dripping down behind them? Are the gutters overflowing at any point? This could be caused by accumulated plant debris, or by a sag or low spot where the gutter supports have failed. Have the gutters twisted or bent due to a heavy load of snow or ice?
5. Watch for signs of peeling paint, stains, or moss growth near downspouts. This could indicate an obstructed downspout where water leaks out through a joint, or one with an open seam due to freezing of accumulated debris inside.
6. If the downspouts don't drain into underground lines or onto a splashblock, be sure there is an extra "elbow" at the outlet, directed away from the building's foundation. This will help prevent moisture from soaking down into the foundation or up into exterior wall materials.
7. When replacing gutters or downspouts, duplicate the existing as closely as possible. If a building does not have gutters and downspouts and is to have them installed, choose a design and color compatible with the design and color of the building.

(Photo 78) Although repair and retention of historic roof materials is strongly preferred for historic buildings, asphalt shingles are appropriate for new construction. When historic roofs are beyond repair, asphalt and similar shingles can be suitable replacements, as on this house at 106 South High Street.

(Photo 79) The building at 167 South High Street has an intact traditional system for catching and removing water: a pitched roof in good repair; gutters along all the eaves; and downspouts to carry the water from the gutters. Gutters and downspouts must be carefully sized to handle the amount of water the roof collects. In addition, downspout elbows such as the one shown, which is necessary so the downspout can be attached to the building wall, can fill with leaves and debris and should be watched for trouble.

(Drawing 8)

GUTTER TYPES

HALF-ROUND GUTTER

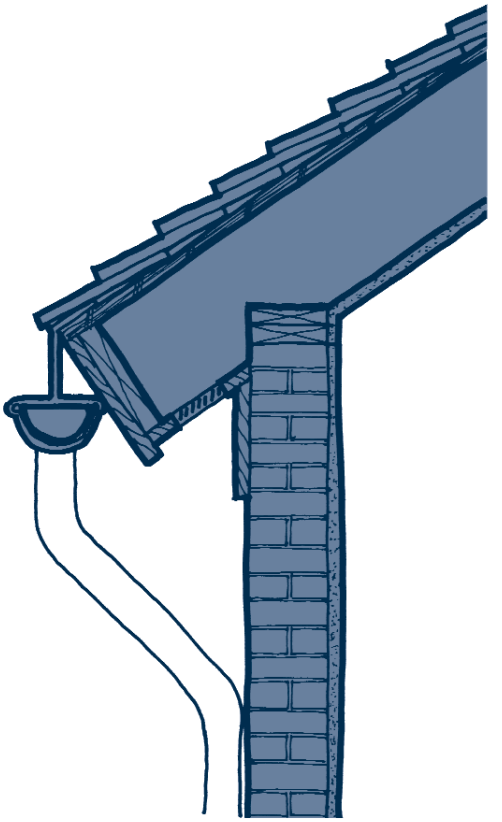

OGEE GUTTER

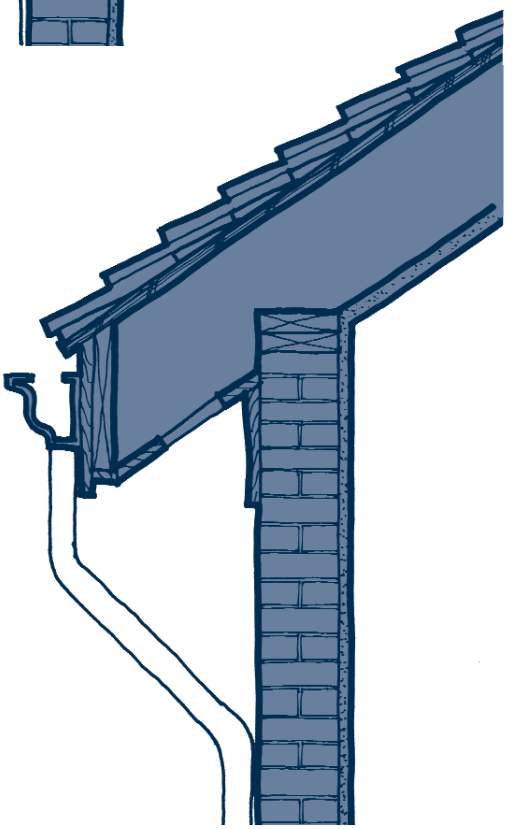

Outbuildings

Outbuildings in Historic Dublin include garages, sheds, and barns. Traditionally used for storage and other secondary functions, they have long been important elements of the alleys and the rear ends of lots in the district. Varying in age from quite old to fairly recent, Historic Dublin's outbuildings contribute to the area's character as part of the streetscape. Care of existing outbuildings and construction of new ones are important considerations.

Outbuildings traditionally were of frame construction and modest in scale. Sometimes they were designed with architectural features similar to those on the houses they accompanied, but more often they were independent structures with their own designs. Common exterior materials included wood shingles, beveled siding, and board-and-batten or flush siding.

The barns in Historic Dublin are rare reminders of the community's rural heritage and are worthy of special efforts to ensure that they and their open settings are preserved.

(Photo 80) Historic Dublin's outbuildings vary widely in size and function. This example, located at 37 North Riverview Street, was built to house vehicles. Note its lean-to rear wing and standing seam metal roof.

(Photo 81) Behind 181 South High Street is this unusual outbuilding, probably built as a chicken coop. Its exposed rafters, double-pitch roof, and numerous windows give it a strong character.

Recommendations

1. Make every effort to retain and repair original outbuildings such as garages, sheds, outhouses, and barns. These structures add variety and character to Historic Dublin, and their loss would affect the district's character.

2. When outbuildings need repair or replacement of deteriorated elements, use new materials that match the old as closely as possible. Avoid modern materials that are incompatible with the original designs of these structures.

3. Newly-constructed outbuildings should use design cues from older nearby structures. This means using forms, massing, roof shape, roof pitch and height, materials, window and door types, and detailing similar to those found on nearby historic or traditional outbuildings. The goal should be to create a new building compatible in appearance with those already in the district.

New Construction

Successful design of new buildings in an existing context requires a lot of creativity, and the most successful designs are contemporary in character. However, they take important design cues from what exists around them.

Historic Dublin's unique character has already been noted; it is a blend of buildings, spaces, landscaping, street patterns, and other elements that has grown over time and is not duplicated anywhere else. New buildings in the district should be designed to fit into this strong existing context. The most appropriate designs for new buildings take account of the context and make an effort to respect it and fit in visually. This should not be interpreted to mean that new buildings should try to look old or should assume a historic character they never had. It also does not mean that there is no room for contemporary design or creativity. Historic Dublin has several buildings of recent date that are integrated successfully into the character of the district.

The following standards can help guide the process of design for new construction, but it is important to remember that each project is different. The Architectural Review Board is required to review all new construction proposals in Historic Dublin for compatibility with the existing historic setting. All applicants for new construction approval should be prepared to show that they have taken account of the New Construction Standards during the design process.

(Drawing 9)

NEW CONSTRUCTION

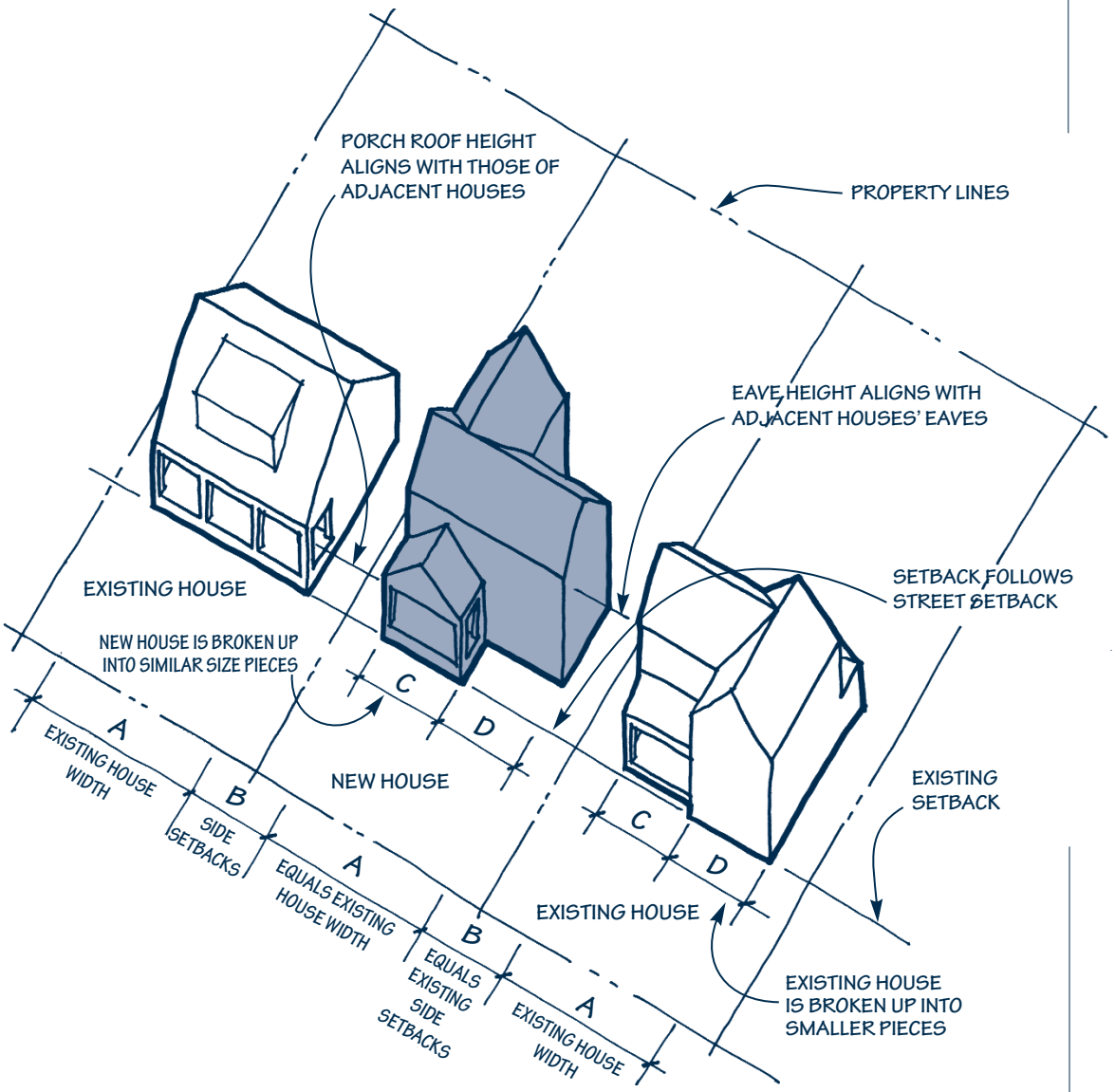

New Construction Standards

1. **Placement and orientation on the lot:** Historic Dublin buildings typically are free-standing but closely spaced along the street. Some buildings along the east side of South High Street have shared or abutting walls typical of more traditional downtown commercial areas, but the free-standing structures are more common. Appropriate placement and orientation for a new structure will vary with location, but the design should resemble the placement and orientation of adjacent structures. The design should also follow the same setback as other buildings, which also varies with location.

2. **Scale and proportion:** Scale refers to the size of a building in relation to that of a person. Historic Dublin is distinctive in part because of its unusually intimate scale: nearly every building has a small, pedestrian scale that is inviting to people. Proportion is the relationship between a building facade's width and its height, and it has an impact upon the building's sense of scale – a building with strongly vertical proportions will impart a different feel from one with a lower profile. Any new construction should be designed with a sense of scale appropriate to that of Historic Dublin, with proportions carefully controlled. The most appropriate approach is to study existing buildings in the district and to try to achieve similar proportions and sense of scale. This may, for example, require designing a building in a series of smaller masses rather than a single large form.

3. **Height:** Buildings in Historic Dublin do not exceed two stories in height at the street grade, and many are only a single story. In designing a new building, observe typical nearby building heights; try to use a similar height, but in any case don't exceed two stories.

4. **Materials, textures, and colors:** New buildings should use traditional Historic Dublin materials (see the guidelines on exterior materials) such as wood, brick, and stone. This will help ensure that new buildings have an appearance and a visual texture compatible with what already exists. Color, too, should be selected according to traditional color use (see the guidelines on color) and also should be compatible with the color(s) of the new building's materials.

5. **Massing, form, and roof shapes:** Massing refers to how the basic shapes of buildings fit together. Most Historic Dublin buildings have fairly simple massing, generally plain rectangular shapes used either singly or as intersecting blocks. Some buildings from the later Victorian period have more complex massing consisting of multiple overlapping blocks. Appropriate new building designs should use massing similar to that in adjacent and nearby buildings. Form grows out of massing and refers to the kinds of massing typical of various architectural styles or building types. Federal style buildings, for example, are almost always rectangular in form, while gabled ell structures have an L shape. Form can be affected by later additions. As with massing, new buildings should employ forms typical of Historic Dublin and appropriate to the building site. Roof shapes in Historic Dublin are primarily in a gabled form, with an equal slope to either side of a central ridge. Cross gables, intersecting gables, and shed roofs provide variety, and

there are some examples of a modified gable known as a hipped roof. New building designs should employ roof shapes such as these.

6. **Rhythm of openings:** In any architectural style or building type, door and window openings have certain patterns. The spacing of these openings in a building wall is known as rhythm. Note that both symmetrical and asymmetrical buildings can have similar rhythms of openings. Historic Dublin has a variety of rhythms due to the age range of its architecture. Designs for new buildings should employ rhythms of openings similar to those in adjacent and nearby buildings.

7. **Window-to-Wall Ratio:** This refers to the amount of window surface in relation to the amount of wall surface in the facade of a building. It varies with a building's age, style, construction type, and use. For example, Federal style stone houses have a low window-to-wall ratio because stone construction requires massive walls with small openings, and window glass was relatively scarce and expensive in the Federal period.

   In the later Victorian period, by contrast, frame construction and readily-available large panes of glass meant that buildings could have a much higher window-to-wall ratio.

   Commercial buildings, because they typically had large display windows, usually had the highest window-to-wall ratio of any building type or style. In planning new construction in Historic Dublin, it is important to observe typical window-to-wall ratios for the form, style, or type of building being planned.

Additions

If permitted by the Zoning Code and by lot size and shape, a building addition can provide needed extra space for a home or business. Because an addition can have a significant impact upon the character and appearance of an existing building and upon the Historic District, the design must be developed carefully and should take account of the following considerations.

Recommendations

1. Materials should be traditional ones used in Historic Dublin for building additions. The new materials do not have to match those in the original building – a frame addition with beveled siding is appropriate for a brick building, for example. Avoid materials that are not typically from the mid-19th to the early 20th century, such as concrete block, rough-sawn siding, or logs. Brick, stucco, and beveled siding or board-and-batten all might be appropriate, depending upon the material in the original building. Although stone was a historic building material, it typically was not used for additions and should be avoided.

2. An addition should be subordinate to the original building. It should be obvious which is the original building and which is the addition. The most common way to do this is to keep the addition smaller in scale – its height and roofline should be below those of the original building, and the windows should be somewhat smaller than the original building's windows.

3. An addition should be located toward the rear of the original building, keeping the appearance of the original as unchanged as possible. If space needs or lot conditions require that the addition be placed farther forward, keep the facade of the addition set back from the original facade. Provide a break or reveal between the original building and the addition so it is apparent that they are two separate structures.

4. Avoid trying to duplicate the original building's architecture and design in the addition. The addition should take its major design cues – form, massing, roof shape, window proportions and spacing, door types, and level and kind of ornamentation – from the original building, but it should be a simplified contemporary structure. Consider simplification of or slight variations from design elements in the original building. This will help avoid the creation of a false "historic" look for the addition.

5. Roofline additions such as dormers, skylights, or penthouses should be avoided in Historic Dublin. The close spacing and modest scale of most of the buildings can mean that these kinds of additions result in so much change that a building's character is adversely affected. If such additions are essential, try to place them toward the rear or along a rear slope where visibility is minimal. Skylights should be flat and low in profile.

(Photo 82) The rear wing at 76 South High Street is a good illustration of how additions should be designed. The wing is placed along the rear elevation; it is built of traditional materials; and it is clearly secondary to the main structure.

(Drawing 10)

RECOMMENDED ADDITIONS

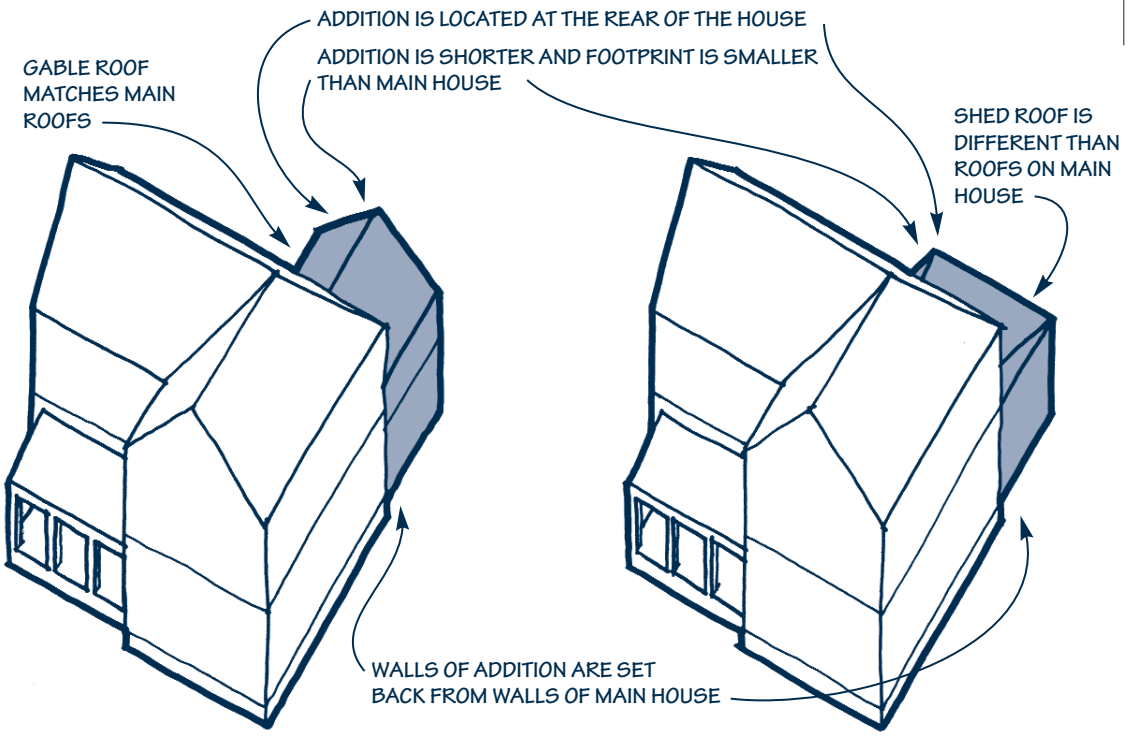

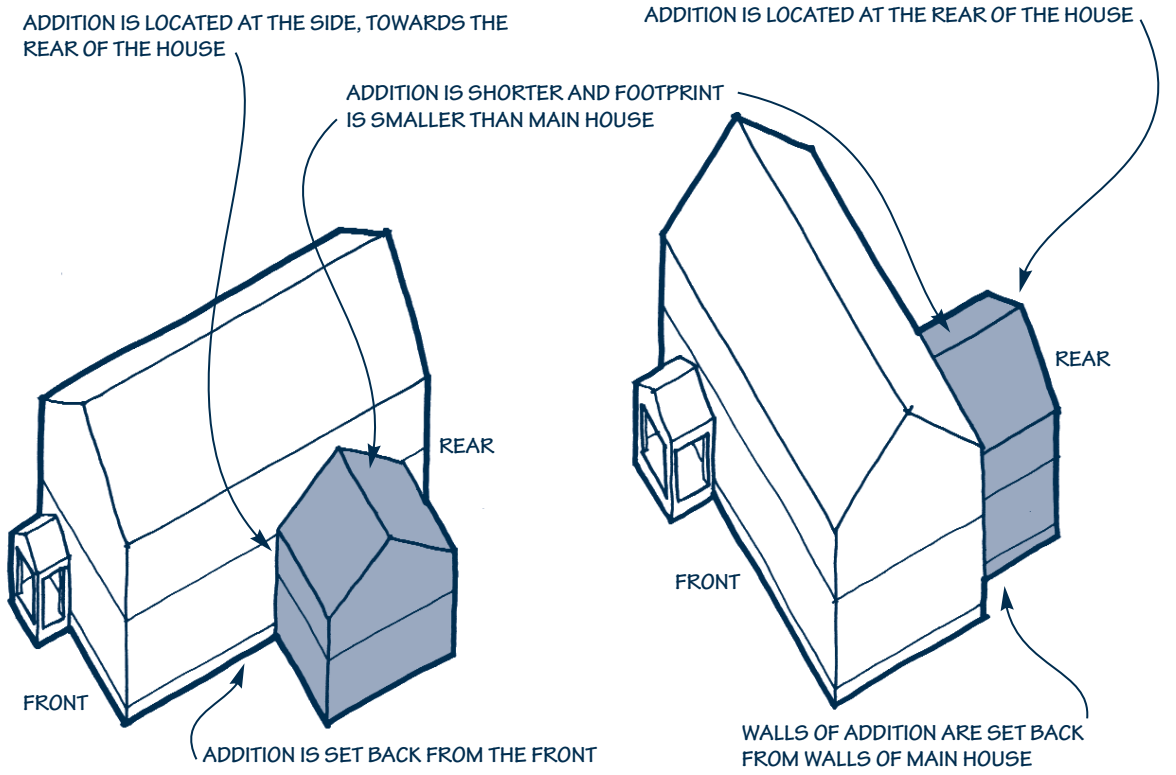

Site Considerations

While the architecture is of prime importance in a historic district such as Historic Dublin, building sites and how they are treated are also play a significant role. Among the reasons Historic Dublin is such a pleasant area and has so much character are its well-maintained tree canopy and its excellent landscaping. These work together with other site elements such as natural landforms, street furniture, traditional stone walls, and open lawn areas to create the district's sense of high quality.

Recommendations

1. **Landscaping and gardens:** The City of Dublin has a Landscape Code covering landscaping for properties used for commercial purposes. Refer to this code before planning any commercial site landscaping. Also, think of landscaping as an important part of a building's site. A small amount of landscaping can have a positive impact, as is easy to see currently in Historic Dublin. A small, well-executed and -maintained landscaping area sometimes can have a much greater impact than a large one and is the more appropriate choice for the relatively small lots and open areas of Historic Dublin. Plant materials should be traditional species found in the mid-19th to the early 20th centuries. See the appendix for some suggestions.

2. **Fences and walls:** The City of Dublin also has a Fence Code, which should be reviewed before any planning for fence construction goes forward. Fences and walls were traditionally used as boundary markers and for security or privacy and are appropriate for Historic Dublin, as long as they are done in designs and materials appropriate for the district. Consider using traditional fence and wall types. These might include low stone walls in the traditional, distinctive Dublin design; low picket fences, iron fences or, in back yard areas, board fences with straight or "dog-eared" top edges, and even rows of trees and shrubs. Avoid non-traditional materials such as concrete or "cyclone" fencing and avoid non-traditional wood fencing designs like basket-weave, shadow-box, or stockade fences. Always use paint or an opaque stain on wood fencing, rather than leaving it natural. If pressure-treated lumber is used for structural elements, wait six months to one year before painting or staining. Avoid fences that are more than four feet high for side and rear yards.

3. **Parking:** Close spacing of buildings and lack of land in the heart of Historic Dublin mean that parking lots cannot be easily created. In areas of the district where conditions will permit creation of parking, though, consider placing parking at the rear of the site, or as far back along the side as possible. Avoid putting parking or curb cuts in front of a building at the sidewalk. Try to reach parking from a side street or an alley rather than from the main street, and be sure that businesses identify the availability of public parking. The Zoning Code requires the screening of parking with landscaping such as a low hedge; check the Code for specific requirements.

4. **Decks and patios:** Decks and patios should be limited to the rear of buildings in Historic Dublin. Decks should be built of wood and kept low to the ground and covered with either paint or an opaque stain to match the color of the building or its trim. Patios may be constructed of concrete or brick.

5. **Sidewalks and street furniture:** Historic Dublin has a pleasant system of sidewalks made of both brick and poured concrete, and well-designed items of street furniture such as benches, waste receptacles, planters, and street lights. Lack of space has dictated fairly narrow sidewalks, but this makes them compatible with the scale of the buildings. The task facing Historic Dublin is not so much planning for more of these elements as it is caring for what already exists and being sure that any replacements of existing elements are at least as compatible as the originals. Sidewalks should not be widened, and the current range of street furniture should be retained to the greatest extent possible. Few, if any, additional items should be added to the streetscape, because doing so could soon result in too many elements and too "busy" a look and feel, which is not appropriate. Outdoor displays fall in this category, too. They should be temporary in nature and appropriate in size and design. To ensure that outdoor displays meet requirements, check with the Planning Division of the City of Dublin, refer to the Zoning Code, and refer to the signage guidelines on page 84.

(Photo 83) A careful combination of site elements – sidewalks, stone walls, lawn areas, and plantings – has created an inviting and attractive environment in Historic Dublin.

(Photo 84) Low stone retaining walls can accommodate the grade changes found in Historic Dublin. This example at 35 South High Street has created elevated planting beds on either side of the entrance walk.

(Photo 85) A snake fence, traditionally used in rural areas, is reminiscent of Dublin's agricultural past. It is at the south end of the historic district at Waterford and South High.

(Photos 86 and 87) The commercial property at 94 North High Street and the Columbus Metropolitan Library branch across the street both have made effective use of landscaping to screen large parking lots. Deep setbacks and vegetative screening are very effective.

(Photo 88) The color, pattern, and texture of the brick sidewalks in Historic Dublin add significantly to the character of the historic district.

(Photo 89) Historic elements of street furniture like this dated hitching post should be retained as part of Historic Dublin's streetscape.

(Photo 90) Traditional fence types, such as this wrought iron example at 91 South High Street, are appropriate for Historic Dublin. This fence is of recent date but is compatible with the district in its materials, size, placement, and design.

(Photo 91) Simple elements of street furniture, such as this bench at 58 South High Street, make Historic Dublin a pleasant and inviting place for pedestrians.

Access for People with Disabilities

The Americans with Disabilities Act (ADA) is a civil rights act meant, in part, to ensure that disabled people enjoy, as much as possible, the same access to buildings as people without disabilities. Both existing buildings and new structures are required to comply with ADA by removing architectural barriers to disabled people. Titles II and III of the act address physical accessibility requirements of publicly-owned facilities (such as schools or a city hall) and privately-owned facilities which are open to the public (such as stores, restaurants and some offices).

Title V, Section 4.1.7 of the act specifically addresses "Accessible Buildings: Historic Preservation." It provides some flexibility in meeting accessibility requirements where such requirements would threaten or destroy the historic significance of the building in question.

Provisions of ADA apply even if an existing building is not undergoing a complete rehabilitation. The need to comply with ADA already exists and is not triggered by a decision to rehabilitate. If in doubt about the applicability of ADA, or about the historic preservation provisions, contact a qualified architect with ADA compliance experience.

Recommendations

1. Ramps or lifts sometimes are needed to provide the disabled access to a building, and these facilities can have a significant visual impact on the building. The location, design, and materials of such facilities are important. Whenever possible, these elements should be located at side entrances to minimize impact on the main facade. The design of ramps and handrails should be simple and contemporary and should not try to mimic any existing handrails. Materials should be the same as or similar to those used in the building itself. Avoid non-traditional materials such as unpainted treated wood. Also avoid solid masonry walls, which can make a ramp much more visually prominent than it needs to be. Consider using a ramp of earth rather than one of wood or metal; it is sometimes easier to integrate an earth ramp into the site's landscaping.

2. If providing access to a building's front entrance is only a matter of overcoming a few inches' difference between sidewalk and entrance, consider re-doing a portion of the sidewalk so that it is sloped upward to overcome the height difference. In such a case, a handrail may not even be necessary.

3. Many materials and designs are available to help make a building accessible. For ramps, concrete usually provides the smoothest and most durable surface. Wood ramps can also be used but may require good design and more maintenance to avoid deterioration. Metal or wood railings both will work well, though wood handrails need regular maintenance so they do not weather and produce splin-

ters. Designs must, of course, comply with ADA standards, but should also be kept as simple and unobtrusive as possible.

4. Consider use of a lift rather than a ramp, in some cases. Experience has shown that when the height to be overcome exceeds about three to three-and-a-half feet, ramps and lifts tend to cost about the same. A lift can be especially useful when space for a ramp is limited, or when the visual impact of a ramp would be too great.

(Photo 92) This crosswalk has a lowered curb and a band of brick pavers with projections that serve as tactile warning devices. Modest steps such as this can make Historic Dublin more accessible for those with disabilities.

(Photo 93) This ramp at 53 North High Street illustrates how accessibility can be provided even on a primary elevation. The vegetative screening and modest handrail result in minimal impact on the building's character.

(Drawing 11)

ACCESSIBILITY

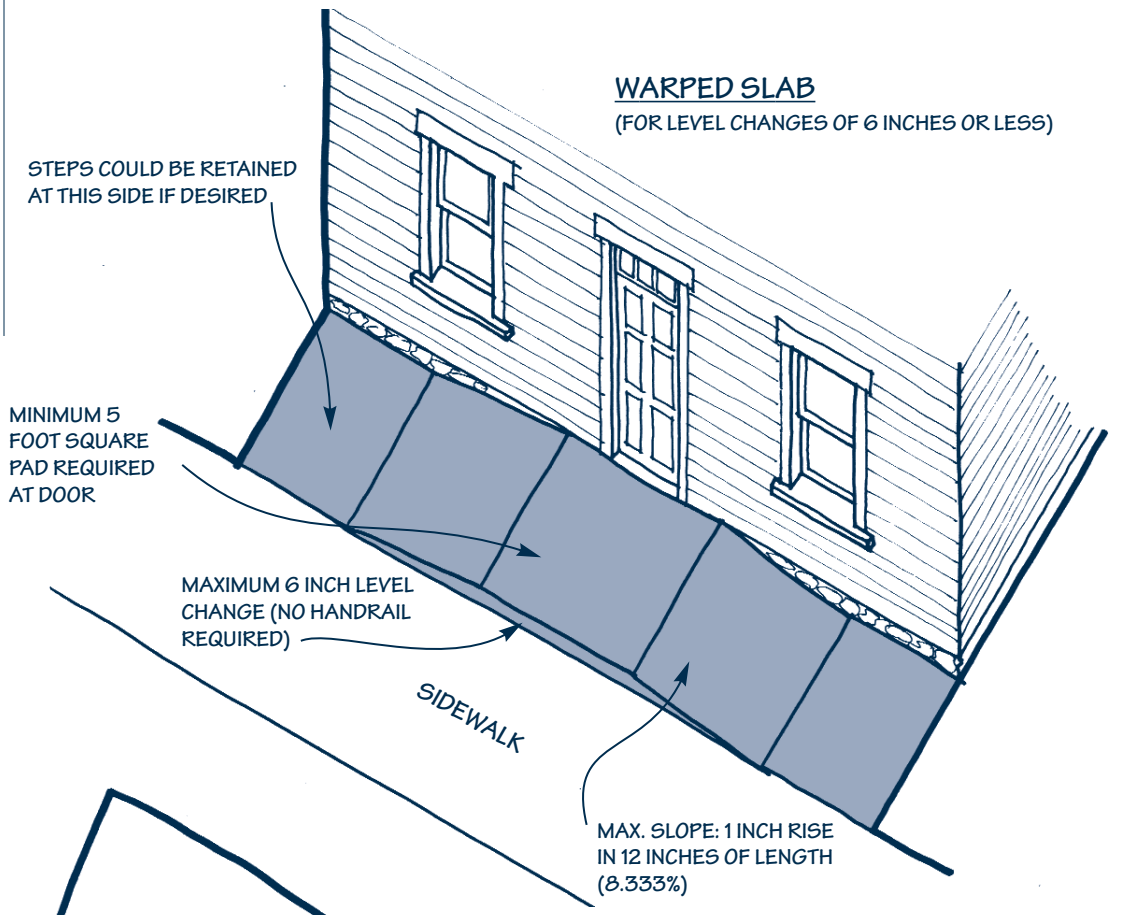

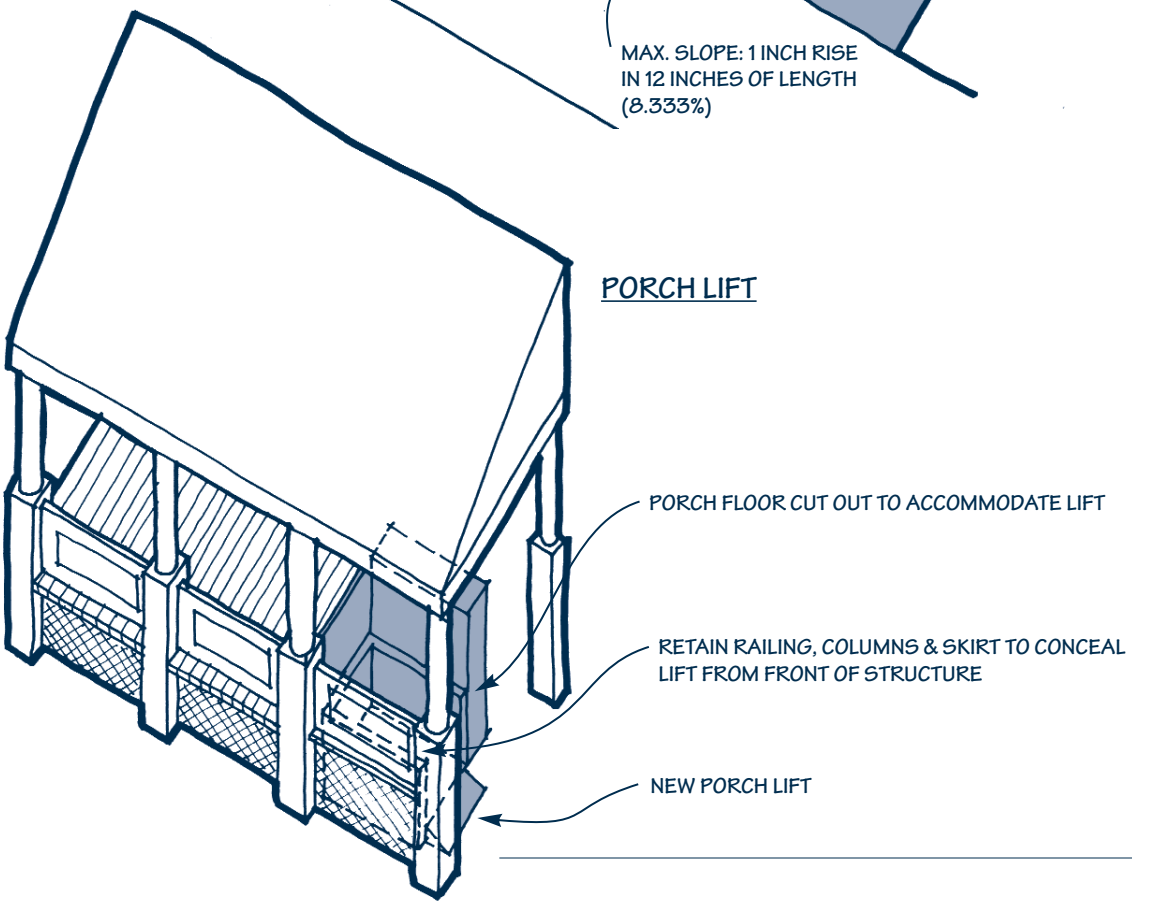

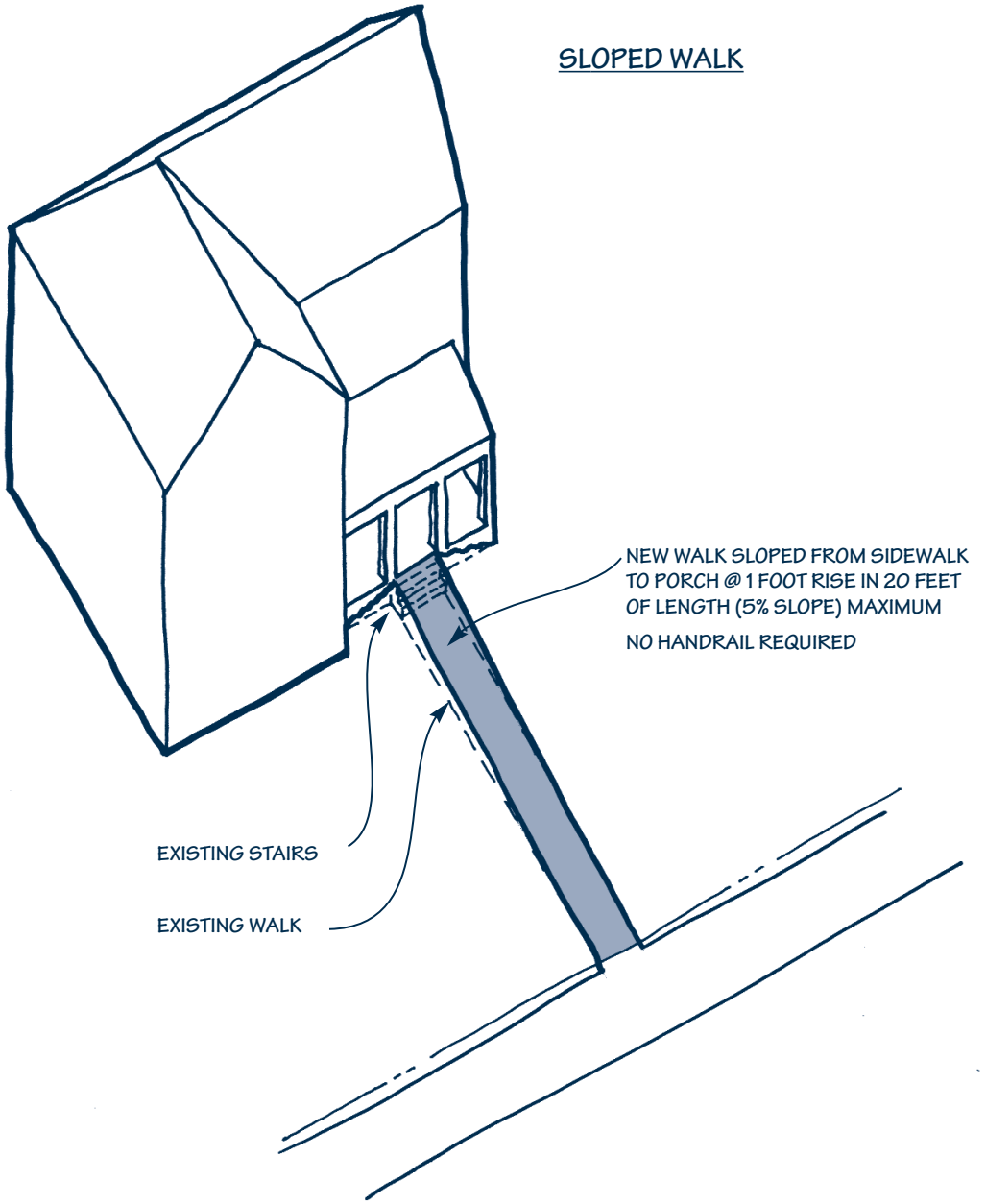
SLOPED WALK
NEW WALK SLOPED FROM SIDEWALK TO PORCH @ 1 FOOT RISE IN 20 FEET OF LENGTH (5% SLOPE) MAXIMUM
NO HANDRAIL REQUIRED
EXISTING STAIRS
EXISTING WALK

Signage

Because Historic Dublin is a fairly small area of modest scale and closely-spaced buildings, commercial signage can have a significant impact upon the district's character. The quality of designs and materials in commercial signage are of prime importance. The City of Dublin's Sign Code governs such signage, and signs are also addressed in Section 153.183 of the ordinance establishing the Architectural Review Board. In addition, see the Historic Dublin Sign Guidelines in the appendix for specific requirements. The discussion and recommendations below will help guide signage design.

Historic Dublin, which developed over a long period from the early 19th century on, generally did not have signage typical of a traditional downtown commercial district. The district had, for example, few commercial structures with large display windows or signboard areas above the windows, so large signboards or signs painted on glass were relatively uncommon. More typical were wall or projecting signs, small in scale, usually painted directly on the building or on wooden signboards that could be attached to the building. These could be mounted flush on the building wall, but they also could be suspended out over the sidewalk, perpendicular to the building.

Signage of this type persisted into the early 20th century, when electric lights broadened the visibility of signs: they could be seen after dark, and lights drew attention to signs that might otherwise be overlooked.

In many signs developed from the 1940s through today, the lighting and the sign are indistinguishable. Plastics have permitted great flexibility, with the result that many commercial signs have grown ever larger in competition with adjacent signs, and interior-lighted signs have become the most common type. Fortunately such signs have never significantly taken hold in Historic Dublin, and the great majority of the district's signs are of traditional early- and mid-19th century design – wall signs, window signs, and some post signs. Barber poles are among the most modern – not to mention most recognizable – signs in Historic Dublin.

Signage of a size, scale, and design compatible with Historic Dublin's character is critical to maintaining the district's high visual quality. When considering replacement of existing or installation of new signage, look closely at some of the well-done signs in the district. The key to successful signage is to encourage diversity and creativity while maintaining visual harmony through careful use of sign design, materials, size, color, and placement. As signs change with changes in building use, there is an opportunity to evaluate existing signage for modification. Appropriate signage takes its cues from the historic character of the buildings and the streets but still effectively communicates the image and the message of the particular business.

The following types of permanent signs, and methods of employing them, are appropriate for Historic Dublin:

a. **Wall signs:** These are among the oldest type of signage, usually made of wood as separate panels and mounted flush against the building wall. This type remains popular today and is appropriate for Historic Dublin. The best signs usually are the simplest, ones which avoid ornate ornamentation and lettering.

(Photos 94 and 95) These projecting signs are modest in scale and have materials and designs appropriate to the buildings on which they are mounted. For both pedestrians and motorists, this type of sign provides excellent business identification.

b. **Projecting signs:** Traditionally used in a pedestrian environment such as Historic Dublin, projecting signs are intended to make it easy for people on the sidewalk to find a business. Usually mounted perpendicular to the building wall, these signs generally consist of a mounting bracket and a signboard which hangs from the bracket. For best visibility, projecting signs should be hung above head height, but not more than eight or nine feet above the sidewalk. The signs and supporting brackets should be simple in design and should avoid ornate details and lettering.

c. **Window signs:** Another still-popular early form of signage, the window sign is applied directly to glass, usually as individual letters. The sign is applied on the inside, to protect it from weathering and damage. The most popular window signs are painted on or applied as decals; opaque wood signboards or other types of signs that obscure the window are not appropriate. Window signs usually are done in light colors – white and gold are typical – in order to have enough contrast to stand out against the glass.

d. **Awning signs:** These are painted directly onto the fabric awnings that shelter many storefronts, on the hanging valance at the awning's edge. This type of sign works best when done in a single light color – usually white – that stands out against the color of the awning fabric, and when designs and lettering are kept simple and plain.

e. **Sandwich board signs:** Usually hinged at the top, these self-supporting two-panel signs are placed on the sidewalk to draw attention to a business. Most sandwich board signs are painted wood; some are made in a "chalkboard" design that permits changing of sign text. These signs, and the merchandise displays that often accompany them, should be temporary in nature, should be used during business hours only, should not impede traffic, and should be as small as possible. Confer with the Planning Division of the City of Dublin before placing any sandwich board signs or merchandise displays.

Recommendations

1. Good quality designs with simple graphics and simple messages are encouraged. Although common geometric forms, such as a rectangle, square, circle or oval, are encouraged, other signage shapes may also be appropriate. Letter sizes and styles should be easily readable. Use of one letter size and one type style is best. Avoid painting signs directly on building walls.

2. Choose sign materials that complement the architectural character of the district. Wood can be painted or carved; metal can be shaped, painted or polished; and canvas can be used for awnings. Wood signs should be painted; natural wood in signs should be avoided as it was not traditionally used and would not be appropriate to the area's architectural character. Plastic is also discouraged as a signage material as it is incompatible with historic building materials.

3. New signage should always be pedestrian in scale. This means that the signage relates more to the sidewalk than it does to the street and is intended for viewing by people who are walking rather than driving.

4. Temporary signs are sometimes necessary to announce sales or special events. Such signs must receive a permit from the City of Dublin's Division of Planning before installation. The signs should be kept small, time on display should be limited, and signs must be placed so they do not block the view of drivers on the street.

5. Colors for signs on or associated with historic buildings should be chosen for compatibility with the age, architecture and colors of the buildings. Signs should be readily visible but should avoid incompatible colors such as "hot pink" or "dayglow." All "fluorescent" colors are prohibited. Accent colors or corporate identity colors or logos can be used with restraint, but such colors should not dominate a sign, and logos should be kept as small and unobtrusive as possible. The color scheme on a sign should be simple, with a maximum of three colors on a single sign.

6. If signs are to be illuminated, lighting should be provided externally. Modern internally-lit signs are not appropriate for Historic Dublin. Lighting for signs should be of a traditional type such as shaded "gooseneck" fixtures or similar simple, plain incandescent or fluorescent lights that shine only on the sign.

7. In addition to conforming to the Historic Dublin Sign Guidelines, signs should be proportionate to the size of the building where they are installed. They should not appear to dominate smaller structures, and doors and windows should not be obscured by signs. The street address and the building name, if any, should be included on signs.

(Photo 96) This hanging sign is placed parallel to the street and sidewalk and is an appropriate way of identifying businesses, especially those in buildings with porches. Use of such signs avoids having to mount signs on building walls or in windows. Note how the ornate sign is profiled to fit the historic ornamentation of the porch.

(Photo 97) For buildings set back from the sidewalk, an appropriate type of projecting sign is a small post sign mounted in the yard. Such a sign is traditional and is easy to build and maintain, and it brings the business identification out to the sidewalk's edge where it is easily noticed.

Building Color

Because they are such a major design element, the colors of a building – whether the natural colors of building materials or applied colors of paint or stain – are an important consideration with impact upon the building's overall character. Though the choice of colors is largely a matter of personal preference, some colors are more appropriate than others, depending upon a building's age, style, and setting. In Historic Dublin, the Architectural Review Board has adopted a policy of flexibility that gives building and business owners considerable freedom in color selection. The ARB seeks to avoid use of colors inappropriate for the architecture of Historic Dublin and provides a series of color palettes to assist applicants in choosing appropriate colors for buildings. Historic Dublin today has a wide range of colors, all of which work well together in the context of the varied designs and ages of the district's architecture.

Historically, color use varied with the time period. Early- and mid-19th century buildings often were painted white, but fairly bright colors such as red, blue, yellow, dark green and even orange were used, sometimes as body colors for buildings and sometimes as trim. After about 1860, typical colors included greens, reds, oranges, browns, and olives that were fairly dark and rich. The body color was usually lighter, with trim painted in darker compatible colors; sometimes the opposite was true. Color patterns were simple, usually with only two different colors used on a building.

In the years between about 1880 and 1900, when architectural designs became more complex and included more ornamental elements, the use of color followed suit. Three colors combined on a single building became more common, and there was a re-introduction of lighter colors such as pale yellow or light green that had seen less use during the 1870-1880 period; when combined with darker colors, this created a more varied visual effect that complemented the generally more complex building designs. Blues and greys saw some use as trim colors but generally were not used as body colors.

After about 1900, architectural design entered a period of reaction to the heavy, ornate compositions of the late 19th century; architects sought simpler, plainer designs and turned to the classical forms and ornamentation of the past. In the Colonial Revival and other styles of this period, colors tended to be lighter and cooler, including creams, yellows, grays, and white.

In many cases in Historic Dublin the colors of unpainted brick or stone walls are the base colors, and trim colors should be selected to be compatible with them. In general, on buildings with dark red brick walls, darker trim colors such as maroon or dark green are appropriate, while for lighter tan or buff-colored brick, and for stone of similar color, consider yellow, cream, or white trim colors. On more recent buildings of concrete block or other materials, follow these same rules of thumb, depending on the basic wall material color.

Recommendations

1. Consider choosing colors based on research into a building's original paint colors. Using scrapers, sandpaper, and paint remover, chip or scrape down through paint layers to expose earlier colors. Always observe safety precautions such as wearing safety eyewear and protection from paint remover fumes; it may be preferable to have a qualified contractor do this work. Once historic paint layers are exposed, match current color chips to them to make a color selection. If original colors can't be discovered or are unacceptable, then consider alternate colors chosen according to the time-period guidelines above. The ARB strongly encourages that paint colors be selected from one of the many historical color palettes various paint companies have developed. These are available at most paint stores.

2. Paint only surfaces that have been painted before. Stone surfaces were seldom painted originally; brick surfaces sometimes were but usually were not. Poor weather resistance or damage to a wall were the usual reasons for painting brick, though sometimes it was just to change the building's look. In general, do not paint brick, stone, or concrete that has not been painted before. If it has been painted, consider re-painting rather than removing the old paint, because this can be difficult, expensive, and it can damage the masonry.

3. Avoid using too many colors on a building. Late 19th century buildings should have a maximum of three different colors (the body color and two trim colors); those from earlier and later periods should have no more than two. Consider using light and dark shades of the same color when choosing body and trim colors.

Demolition Considerations

Because it is an irreversible act, full or partial demolition of any structure in Historic Dublin must be carefully considered, both by building owners and the Architectural Review Board, before any decision is made.

A decision on whether demolition is appropriate has to consider several factors:

- Is the proposed demolition full or partial?
- What is the age of the structure being demolished?
- What is the level of integrity of the structure being demolished?
- What is the impact of the demolition on the character of the Historic District?
- What are the plans for the site following demolition?
- Is the proposed replacement structure's design appropriate for the character of Historic Dublin? Does it follow the design guidelines?

In cases where an applicant applies for ARB approval to demolish a structure within Historic Dublin, the ARB may grant the demolition if at least two of the following conditions prevail:

a. The structure contains no features of architectural and historic significance to the character of the district.

b. There exists no reasonable economic use for the structure as it exists or as it might be restored, and there exists no feasible and prudent alternative to demolition.

c. Deterioration has progressed to the point where it is not economically feasible to restore the structure.

Demolition by neglect is not allowed. The City of Dublin has a property maintenance code, and failure to comply with the code will not create a justification for demolition. Property owners can be cited for failure to maintain a building in accordance with the code.

Remember that both ARB approval and a demolition permit are needed before demolition can proceed.

Recommendations

1. In general, demolition of buildings built prior to World War II should be avoided. These tend to be the buildings that contribute the most to the district's character. Note, however, that it may be desirable to keep a newer building from being demolished, depending on what is proposed to replace it.

2. Applicants for demolition should be prepared to explain and to document the financial and technical reasons why it is not feasible to accomplish their goals while retaining the existing building.

3. Because of age or design, some building additions may have achieved significance in their own right and may be nearly as important as an original building. Removal of such elements might adversely affect the building's character, and this should be taken into account when demolition is proposed.

4. Demolition to create parking lots should be avoided. Loss of buildings would permanently alter the character of the entire district.

5. Demolition to combine lots for larger developments should also be avoided. A hallmark of Historic Dublin is its small-scale buildings on closely-spaced sites. Assembly of land for large lots and construction of large buildings, especially involving demolition of existing structures, is not appropriate.

6. When full or partial demolition of an existing structure is proposed, the applicant should be prepared to present detailed plans for the replacement building. Demolition may not proceed until the Architectural Review Board is satisfied that the proposed new structure conforms to the design guidelines and is appropriate for the character of the Historic District.

7. Even after demolition begins, if it becomes apparent that a building is of special character (such as a previously unknown log building), call the City of Dublin, Division of Planning as soon as possible. A demolition is approved based on the assumptions in an application and a change in facts such as this constitutes a reason to reconsider approval of the demolition.