City of Dublin

Case # _____-_____

APPLICATION FOR **DEVELOPMENT**

PLEASE CHECK THE TYPE OF REVIEW

- ☐ West Innovation Districts (Zoning Code Sections 153.037 - 153.043)
- ☑ Bridge Street Corridor Districts (Zoning Code Sections 153.057- 153.066)
- ☐ Wireless Communication Facility (Chapter 99)

PLEASE CHECK THE APPLICATION TYPE

- ☐ Basic Plan Review
- ☐ Development Plan Review
- ☑ Minor Project
- ☐ Site Plan Review
- ☐ Waiver Review
- ☐ Open Space Fee-in-Lieu
- ☐ City Council Appeal
- ☐ Master Sign Plan
- ☐ Parking Plan
- ☐ Administrative Departure

Wireless Applications

- ☐ New Tower
- ☐ Alternative Structure
- ☐ Co-Location
- ☐ Temporary

The following applications require review and decision by the **Planning and Zoning Commission, Board of Zoning Appeals**, or **Architectural Review Board**, but may be submitted concurrently with another application.

Check any that apply:

- ☐ Conditional Use
- ☐ Rezoning
- ☐ Administrative Appeal
- ☐ Project involving modifications to property within the Architectural Review District
- ☐ Other:_____

SUBMISSION REQUIREMENTS

- ☑ **Fee** (refer to the approved fees list)
- ☑ **Electronic Copies** of all application materials (PDF, JPEG, Word, etc. as appropriate)
- ☑ **Submission Requirements** for each type of application (refer to checklists)
- ☐ **Legal Description and/or Property Survey** for the subject property

I. PROPERTY INFORMATION:

Provide information to identify properties and the proposed development. Attach additional sheets if necessary.

Property Address(es): 6400 - 6550 RIVERSIDE DRIVE	
Tax ID/Parcel Number(s): 273-008243, 273-008831, 273-008832, 273-008833, 273-008834, 273-008838,	Parcel Size(s) in Acres: Approx. 11.1 acres total
Existing Land Use/Development: Commercial/Retail Center	Zoning District: BSC Commercial

☐ Check this box if any **Administrative Departures** are requested and attach an Administrative Departure request form.

☐ Check this box if any **Waivers** are requested as part of the application for development and attach a Waiver Request form.

II. PROPERTY OWNER INFORMATION:

Indicate the person(s) or organization(s) who own the property proposed for development. Attach additional pages if there are multiple property owners.

Name (Individual or Organization): 6490 RIVERSIDE DRIVE, LLC	
Mailing Address: 2135 DANA AVENUE, SUITE 200 CINCINNATI, OH 45207	
Daytime Telephone: 513-563-7555	Fax:
Email or Alternate Contact Information:	

FOR OFFICE USE ONLY: DIRECTOR'S ACCEPTANCE

Date of Acceptance:	Next Decision Due Date:
Final Date of Decision:	Determination:
Director's (or Designee's) Signature:	

III. APPLICANT(S): Indicate person(s) submitting the application if different than the property owner(s).

Name: (Individual or Organization)	
Mailing Address:	
Daytime Telephone:	Fax:
Email or Alternate Contact Information:	

IV. AUTHORIZED REPRESENTATIVE(S): Indicate the person(s) authorized to represent the property owner and/or applicants.

Name: (Individual or Organization) ANDREAS LARISCH, TRIAD ARCHITECTS	
Mailing Address: 936 EASTWIND DRIVE, STE 202, COLUMBUS OH 43081	
Daytime Telephone: 614-942-1050	Fax: 614-942-1059
Email or Alternate Contact Information: alarisch@triadarchitects.com	

V. AUTHORIZATION FOR OWNER'S APPLICANT(S)/REPRESENTATIVE(S): Complete if applicable.

I, CHRIS DOBROZSI, the **owner**, hereby authorize Andreas Larisch of TRIAD Architects to act as a **representative(s)** in all matters pertaining to the processing and approval of this application, including modifying the application. I agree to be bound by all representations and agreements made by the designated representative.

Signature of Current Property Owner: Chris Dobrozsi	Date: 9.5.12

☐ Check this box if the original Authorization for Owner's Applican(s)/Representative(s) is attached as a separate document.

VI. AUTHORIZATION TO VISIT THE PROPERTY: Site visits to the property by City representatives are essential to process this application. The Owner/Applicant, as noted below, hereby authorizes City representatives to enter, photograph and post a notice on the property described in this application. This is optional, but recommended.

I, ANDREAS LARISCH, the **owner** or **authorized representative**, hereby authorize City representatives to enter, photograph and/or post a notice on the property described in this application.

Signature of Owner or Authorized Representative:	Date: 9.25.2012

VII. APPLICANT'S AFFIDAVIT: This section must be completed and notarized.

I, ANDREAS LARISCH, the **owner** or **authorized representative**, have read and understand the contents of this application. The information contained in this application, attached exhibits and other information submitted, is complete and in all respects true and correct, to the best of my knowledge and belief.

Signature of Current Property Owner or Authorized Representative:	Date: 9.25.2012

☐ Check this box if the Applicant's Affidavit and Acknowledgement is attached as a separate document.

Subscribed and sworn to before me this 25th day of September, 20 12

State of OHIO

County of Franklin

Rena Harper

{Notary Public Seal}

NOTARIAL SEAL
RENA S. HARPER
NOTARY PUBLIC, STATE OF OHIO
FRANKLIN COUNTY

TRIAD ARCHITECTS
where design begins with people

September 25, 2012

City of Dublin – Building Standards
5800 Shier Rings Road
Dublin, Ohio 43016

RE: Bridge Pointe Retail Center Improvements
6400 – 6550 Riverside Drive

Dear Sir or Madam:

Regarding the City of Dublin – Minor Project Review Checklist, the Project Description is as follows:

Exterior façade renovations to an existing retail center originally built in 1982/83. All street and parking lot-facing facades are to receive an updated material and color palette. All rear elevations will be repainted. Along with the façade modifications, additional dumpster enclosures will be constructed, and existing enclosures will be repaired and repainted.

Sincerely,

Andreas Larisch, Assoc. AIA

936 Eastwind Drive, Suite 202, Columbus, OH 43081 T 614 942 1050 F 614 942 1059 www.triadarchitects.com

City of Dublin

MINOR PROJECT REVIEW CHECKLIST

MINOR PROJECT OVERVIEW

The purpose of the Minor Project Review is to provide an efficient review process for smaller projects that do not have significant community effects. The Minor Project Review is necessary to ensure that applications meet the requirements of Chapter 153 of the Dublin Code of Ordinances.

PLEASE CHECK THE MINOR PROJECT TYPE

Refer to Zoning Code Section 153.066(G):

- ☐ Single-family detached building
- ☐ Multiple-family/single-family attached buildings (eight dwelling units or fewer)
- ☐ Non-residential structures 10,000 square feet or less
- ☐ Principal structure additions of less than 10,000 square feet or 25%, whichever is less
- ☐ Exterior modifications involving not more than 25% of the total façade area of the structure
- ☐ Signs, landscaping, parking, and other site improvements without a principal structure
- ☑ Accessory structures and uses
- ☑ Modifications to an Existing Structure
- ☐ Master Sign Plan
- ☐ Parking Plan

I. GENERAL APPLICATION REQUIREMENTS

☑	Completed original **application form** and **fee**
☑	**Project Description** (generally outline the project) See attached.
☐	General **description of conformance** to the Bridge Street Corridor Vision Report, Zoning Code Sections 153.057 - 153.065, and any approved Development Plans and/or Site Plans, where applicable
☐	**List of proposed Site Plan Waivers and/or Administrative Departures** (if known). If applicable, attach a **Site Plan Waiver** or **Administrative Departure Request Form**.

II. MINOR PROJECT PLAN:

All plans shall be labeled and include the name of the development, developer, plan scale, plan date, date(s) of revisions, location key map, and north arrow on each page. 10 scaled, folded, and collated copies (11x17 and/or 22x34 as appropriate) shall be submitted including the following information. If Planning and Zoning Commission or Architectural Review Board review is required, additional copies of materials may be requested. **Plans shall include the following information, unless otherwise waived by the Director for items determined to be unnecessary to the application.**

General Site Plan Elements	
☑	Existing conditions and site features drawn to scale, including rights-of-way, vehicular and pedestrian access points, all known easements, utilities, buildings and structures, pavement, topographical features, vegetation, bodies of water, and any other relevant existing site features
☑	Proposed site plan, including project area and dimensions, area of approved Development Plan and/or Site Plan with which the project is associated, and proposed vehicular and pedestrian lot and block access configurations

Site Development	
A. Use	**No change of use proposed** ☑
i	List the proposed uses (refer to §153.059), number of dwelling units, and square footage of each use. Identify whether any use specific standards apply (refer to §153.059(C)).
B. Open Space	**No open spaces proposed/required** ☑
i	Required open space computation and method(s) of provision identified on the plans (refer to §153.064)
ii	Open Space Types proposed (refer to §153.064(F))
iii	Request for fee-in-lieu application Yes ☐ No ☐ If yes, attach an **Open Space Fee in Lieu Request** form
iv	For each Open Space Type, identify the total acreage and dimensions (refer to §153.064(G)(1)(a)); percentage perimeter of each Open Space Type along buildings and rights-of-way; percentage of impervious and semi-pervious surfaces; and any plans for proposed improvements, including structures, water features, site amenities, etc. Provide specification sheets for all pre-fabricated site amenities, and elevations and material specifications for all other site improvements.
C. Parking and Loading	**No changes to parking/loading proposed** ☑
i	Required parking computation (vehicular and bicycle) based on the proposed mix of uses (refer to § 153.065(B))
ii	Parking location and layout, including all on-site, off-site, on-street and accessible vehicular spaces, and all bicycle parking
iii	Required loading space computation (refer to § 153.065(B)(7)) and location and layout of all loading facilities
iv	Parking plan proposed Yes ☐ No ☐ If yes, provide a description and demonstration of all proposed Adjustments to Required Vehicle Parking (refer to § 153.065(B)(2)(b)), including a Demonstration of Parking Need, and evidence of any shared parking arrangements or agreements

II. MINOR PROJECT PLAN, CONTINUED

Site Development, Continued	
D. Landscaping and Tree Preservation	**No changes to existing landscaping proposed** ☐
i	Tree survey, including location, sizes, and types of existing trees 6 inches or greater in diameter, measured at 3½ feet off the ground, and the general location of all other existing plant materials, with an identification of materials to be removed and materials to be preserved, including any landmark trees identified on the property
ii	Tree preservation plan (refer to §153.065(D)(9))
iii	Landscape plan, including calculations showing required landscaping, and location and type of all proposed shrubs, trees, and other live plant material (refer to §153.065(D)). Indicate the proposed perimeter landscape buffering, if applicable (refer to §153.065(D)(4)), proposed surface parking and circulation area landscape treatments (refer to §153.065(D)(5)), Required Building Zone treatment (refer to §153.065(D)(6)), and all building foundation landscaping (refer to §153.065(D)(7)). Indicate any landscape areas specifically dedicated for stormwater management purposes.
iv	Planting list for proposed landscape materials with caliper size or height of material, method of installation, dates of plant installation, botanical and common names, and quantity
v	Landscape maintenance plan and schedule including contact information of the party responsible for maintenance
vi	Street trees (refer to §153.065(D)(3)), including type, locations, and method of installation
E. Signs	**No signs proposed** ☐
i	Number of proposed signs and proposed locations, including any potential ground signs or building-mounted signs. Provide elevations indicating all proposed and/or potential building-mounted signs and any other proposed signs (refer to §153.066(H))
ii	Sign design and lighting, including dimensions for all sign copy, logos, and secondary text and/or images, colors, and material specifications
iii	Master sign plan proposed Yes ☐ No ☐ If yes, include, at a minimum, all proposed locations, types, number, heights, and sizes of signs, indicated on scaled plans and/or building elevation drawings, proposed materials, colors, types of illumination, and fabrication details (refer to §153.065(H)(2)(c)6). Include a statement addressing the Master Sign Plan criteria, and identify any proposed departures from the sign regulations of §153.065(H)
F. Site Management	**No site modifications proposed** ☐
☑	Dumpster location(s), including elevations and construction details, and waste removal plan including frequency and type of removal
☑	Proposed fences, walls, and screening methods, including types, materials, and locations (refer to §153.065(E))
iii	Site lighting plan (refer to §153.065(F)), including locations of all site, building, and pedestrian lighting, and pole and light fixture specification sheets

Access and Circulation	Not Applicable ☑
i	Proposed driveways (show all driveways and intersections within 250 feet of the site) and all vehicular circulation areas. Include sight visibility triangle measurements and curb radii for all driveways and parking lot islands.
ii	Traffic regulatory signs and pavement markings
iii	Designation of fire lanes
iv	Location, width and materials for proposed sidewalks and non-motorized paths within the site, rights of way, or easements

Grading and Utilities	Not Applicable ☑
i	Site grading plan, including locations of existing drainage courses, floodplains, streams, and wetlands with elevations, and method of mitigation or protection
ii	Stormwater drainage and management consistent with the requirements of Chapter 53 of the Dublin City Codes
iii	Location(s) of sanitary sewers, existing and proposed
iv	Location(s) and size(s) of existing and proposed water mains, well sites, water service and fire hydrants
v	Location(s) of above and below ground gas, electric and telephone lines, existing and proposed (refer to §153.065(G))
vi	Location(s) of transformers and utility boxes

II. MINOR PROJECT PLAN, CONTINUED

Building Types and Architecture	Not Applicable ☐
☐ i	List and identify on the plans the building type(s) proposed (refer to §153.062). For each building type, complete and attach an **Individual Building Type Requirement Table**.
☑	The proposal involves an Existing Structure (refer to §153.062(B)(2)) Yes ☑ No ☐ If yes, provide the original gross floor area of the Existing Structure, any proposed expansions to the Existing Structure (percentage and square footage), and/or a description of any proposed exterior architectural modifications (including percentage of modifications to the original building façades)
☐ iii	Roof plans (refer to §153.062(D)), including slopes of pitched roofs and parapet height where applicable
☑	Building sections indicating story height (refer to §153.062(N)(2))
☑	Building façade elevations for all sides, dimensioned and drawn at an appropriate scale. Include all proposed vents, gutters, downspouts, air conditioning units, and utility elements.
☑	Building materials and colors labeled on all building elevations, including material specifications (refer to §153.062(E)). Identify the percentage of each type of material on each elevation, and the percentage used on the overall building.
☐ vii	Conceptual building floor plans
☐ viii	Provision of architectural details and material specification sheets (as appropriate), including building entrance design, mid-building pedestrianways, windows, shutters, awnings, canopies, balconies, porches, stoops, chimneys, vehicular canopies, etc. (refer to §153.062 for general building type requirements)
☐ ix	Terminal vista treatments (if applicable) (refer to §153.062(J))
☐ x	Method of meeting building variety requirements (if applicable) (refer to §153.062(K))

III. MINOR PROJECT REVIEW CRITERIA:

The Administrative Review Team shall review the application for a Minor Project and approve, deny, or approve with conditions, based on the criteria of §153.066(F)(5) applicable to Site Plan Reviews. The decision on the Minor Project shall be provided not more than 14 days from the filing of the Minor Project Review application, unless otherwise agreed to in writing by the City and the applicant.

Review Criteria for Minor Projects (Site Plans)	
(a)	The Site Plan shall be substantially similar to the approved Basic Plan;
(b)	If a Development Plan has been approved that includes the property, the application is consistent with the Development Plan;
(c)	The application meets all applicable requirements of §153.059 and §§153.062 through 153.065 except as may be authorized by Administrative Departure(s) pursuant to §153.066(H);
(d)	The internal circulation system and driveways provide safe and efficient access for residents, occupants, visitors, emergency vehicles, bicycles, and pedestrians;
(e)	The relationship of buildings and structures to each other and to other facilities provides for the coordination and integration of the development within the surrounding area and the larger community and maintains the image of Dublin as a high quality community;
(f)	The application is consistent with the requirements for types, distribution, and suitability of open space in §153.064 and the site design incorporates natural features and site topography to the maximum extent practicable;
(g)	The scale and design of the proposed development allows the adequate provision of services currently furnished by or that may be required by the City or other public agency including, but not limited to, fire and police protection, public water and sanitary sewage services, recreational activities, traffic control, waste management, and administrative services;
(h)	Stormwater management systems and facilities will not cause alterations that could increase flooding or water pollution on or off the site, and removal of surface waters will not adversely affect neighboring properties;
(i)	If the development is to be implemented in phases, each phase is able to be considered independently, without the need for further phased improvements; and
(j)	The application demonstrates consistency with the BSC Vision Report, Community Plan and other related policy documents adopted by the City.

BRIDGE POINTE RETAIL CENTER IMPROVEMENTS

6400 - 6550 RIVERSIDE DRIVE
DUBLIN, OHIO 43017

FOR

6490 RIVERSIDE DR., LLC.
2135 DANA AVENUE, SUITE 200
CINCINNATI, OHIO 45207

ARCHITECTS:
TRIAD ARCHITECTS
936 EASTWIND DRIVE, SUITE 202
COLUMBUS, OHIO 43081
PHONE (614) 942-1050 FAX (614) 942-1059

STRUCTURAL ENGINEERS:
STEVEN SCHAEFER ASSOCIATES, INC.
815 GRANDVIEW AVENUE, SUITE 250
COLUMBUS, OHIO 43215
PHONE (614) 428-4400 FAX (614) 428-4500

CONTRACTOR:
EQUITY, INC.
445 HUTCHINSON AVENUE, SUITE 800
COLUMBUS, OHIO 43235
PHONE (614) 802-2900 FAX (614) 802-2901

REDEVELOPMENT BY:
NEYER PROPERTIES
2135 DANA AVENUE, SUITE 200
CINCINNATI, OHIO 45207
PHONE (513) 563-7555 FAX (513) 563-4288

COMMISSION NO.: 1205

DATE: SEPTEMBER 25, 2012 - PERMIT SET

VICINITY MAP

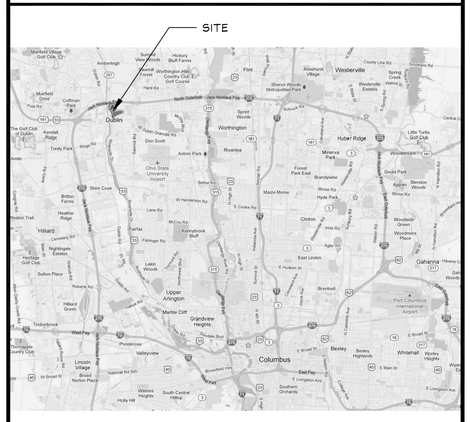

LOCATION MAP

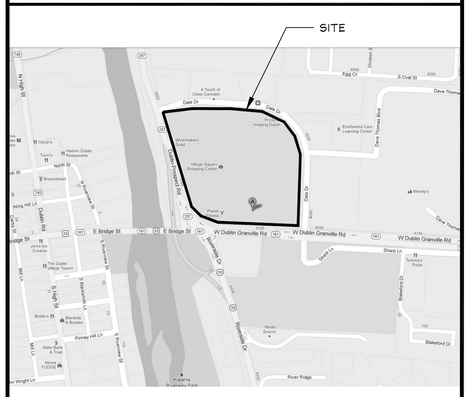

SHEET INDEX

Sheet Number	Sheet Title
A0.1	TITLE SHEET AND GENERAL INFORMATION
A0.2	GENERAL NOTES, CODE DATA, AND TYPICAL INFORMATION
A0.3	SPECIFICATIONS
A0.4	SPECIFICATIONS
A0.5	SPECIFICATIONS
A0.6	SPECIFICATIONS
A0.7	SPECIFICATIONS
A0.8	SPECIFICATIONS
A0.9	SPECIFICATIONS
A0.10	SPECIFICATIONS & EXTERIOR FINISH SCHEDULE
AS1.0	OVERALL SITE PLAN
AS1.1	SITE DETAILS
AS1.2	SITE DETAILS
A2.0	ELEVATIONS
A2.1	ELEVATIONS
A2.2	ELEVATIONS AND ELEVATION DATA
A3.0	SECTIONS
A3.1	SECTIONS
A5.0	DETAILS
A5.1	DETAILS
S2.0	PLANS
S3.0	SECTIONS
S4.0	GENERAL NOTES

BRIDGE POINTE
RETAIL CENTER
IMPROVEMENTS

NEYER PROPERTIES

6400 - 6550 Riverside Drive
Dublin, Ohio 43017

COMMISSION NUMBER: 1205

TRIAD ARCHITECTS
936 Eastwind Drive, Suite 202
Columbus, Ohio 43081
Phone: (614) 942-1050
Fax: (614) 942-1059
main@triadarchitects.com

DATE:
9/25/2012 - PERMIT SET

SEAL:
STATE OF OHIO
BRENT T. FOLEY
14892
REGISTERED ARCHITECT

BRENT T. FOLEY, LIC. 14892
EXP: DEC 31, 2012

TITLE SHEET AND
GENERAL INFORMATION

DRAWN BY: AML
CHECKED BY: BTF/ZP

A0.1

P:\Pro-12\1205-Equity Bridge Pointe\100-Cad\20 Current Drawings\1205-A0.1-TitleSheet.dwg, 9/25/2012 10:27:52 AM

CODE DATA

BUILDING CODE DATA

APPLICABLE CODE: 2011 OHIO BUILDING CODE (OBC)

DESCRIPTION: RETAIL

AREA:
RETAIL: - APPROX. 70,798 S.F.

CONSTRUCTION TYPE: II-B

USE GROUP: ASSEMLBY A-2, MERCANTILE

1. SAFETY GLAZING SHALL BE PROVIDED IN SPECIFIC HAZARDOUS LOCATION PER OBC SECTION 2406.4
   A. GLASS IN ALL EXIT DOORS AND GLAZED PANELS ADJACENT TO AND WITHIN 12 INCHES OF DOORS SHALL BE GLAZED WITH TEMPERED LAMINATED OR WIRE GLASS AS SET FORTH IN FEDERAL STANDARDS.
   B. GLAZING IN FIXED PANELS HAVING A GLAZED AREA IN EXCESS OF 9 SQUARE FEET WITH THE LOWEST EDGE LESS THAN 18 INCHES ABOVE THE FINISH FLOOR LEVEL AND A WALKING SURFACE WITHIN 36 INCHES OF SUCH GLAZING.
2. FIRE STOPPING SHALL BE INSTALLED AT ALL SPACES PER OBC SECTION 717.
3. SHOULD TENANT AREA BE PROVIDED WITH OPEN AREAS FOR SYSTEMS FURNITURE (OR EQUIVALENT), THE INSTALLER SHALL ALLOW FOR AISLE ACCESSWAYS IN ACCORDANCE TO OBC SECTION 1005, 1014 AND 1017.2.

ADA NOTES

THE INTENT OF THESE DOCUMENTS IS TO COMPLY WITH THE CURRENT EDITION OF THE AMERICANS WITH DISABILITIES ACT ACCESSIBILITY GUIDELINES (ADAAG) AND THE 2011 OHIO BUILDING CODE (OBC) CHAPTER 11 "ACCESSIBILITY TO BUILDINGS AND FACILITIES" WHEREVER POSSIBLE. THE CONTRACTOR SHALL INCORPORATE INTO THE WORK, BUT IS NOT LIMITED TO, THE FOLLOWING ITEMS:

1. HARDWARE: ALL NEW AND EXISTING LOCKSETS SHALL BE LEVER-OPERATED AND BE MOUNTED NO HIGHER THAN 48" ABOVE FINISHED FLOOR. MANUFACTURER, STYLE, AND FINISH TO MATCH EXISTING BUILDING STANDARD, EXCEPT WHERE NOTED OTHERWISE. ADAAG 4.13.9.
2. DOORS WITH CLOSERS SHALL HAVE A SWEEP PERIOD SO THAT FROM AN OPEN POSITION OF 70 DEGREES, THE DOOR WILL TAKE AT LEAST THREE (3) SECONDS TO MOVE TO A POINT 3" FROM THE LATCH, MEASURED TO THE LEADING EDGE OF THE DOOR. ADAAG 4.13.10.
3. DOOR OPENING FORCE SHALL BE PER ADAAG 4.13.11:
   A. FIRE DOOR, MINIMUM ALLOWED BY CODE.
   B. EXTERIOR HINGED DOORS, 8.5 POUNDS.
   C. INTERIOR HINGED DOORS, 5.0 POUNDS.
   D. SLIDING DOORS, 5.0 POUNDS.
4. THRESHOLDS AT DOORWAYS SHALL NOT EXCEED 1/4" IN HEIGHT FOR EXTERIOR SLIDING DOORS OR 1/2" FOR OTHER TYPES OF DOORS. RAISED THRESHOLDS AND FLOOR LEVEL CHANGES AT ACCESSIBLE DOORWAYS SHALL BE BEVELED WITH A SLOPE NO GREATER THAN 1:2. ADAAG 4.13.8.
5. ALARMS: WHERE ANY NEW OR EXISTING ALARMS ARE ENCOUNTERED, THEY SHALL COMPLY WITH ADAAG 4.28 FOR BOTH AUDIBLE AND VISUAL REQUIREMENTS.
6. ALL ELECTRICAL DEVICES INCLUDING SWITCHES, OUTLETS, ETC. ARE TO BE INSTALLED AT A MAXIMUM HEIGHT OF 48" AND A MINIMUM HEIGHT OF 15" ABOVE FINISH FLOOR PER ADAAG 4.27.3.

GENERAL NOTES

1. THE ARCHITECT'S RESPONSIBILITY IS LIMITED TO THE ITEM'S SHOWN ON THE ARCHITECTURAL DRAWINGS. OBTAIN ARCHITECT'S SPECIFIC APPROVAL PRIOR TO DEVIATING FROM THE DRAWINGS. FOLLOW THE BEST TRADE PRACTICES AND ENGINEERING FOR THE ITEMS NOT SPECIFICALLY DETAILED AND INDICATED.
2. THESE DOCUMENTS ARE NOT TO BE SCALED. WRITTEN DIMENSIONS GOVERN. CONTACT THE ARCHITECT IMMEDIATELY SHOULD A CONFLICT OCCUR.
3. IT IS THE CONTRACTOR'S SOLE RESPONSIBILITY TO FOLLOW ALL APPLICABLE SAFETY CODES AND REGULATIONS DURING ALL PHASES OF CONSTRUCTION.
4. PROVIDE ADEQUATE TEMPORARY SUPPORT FOR WORK BEING CUT AND PATCHED TO PREVENT FAILURE. DO NOT ENDANGER OTHER WORK. PROVIDE ADEQUATE PROTECTION OF OTHER WORK DURING CUTTING AND PATCHING TO PREVENT DAMAGE. CUT WORK BY METHODS LEAST LIKELY TO DAMAGE WORK TO BE RETAINED AND WORK ADJOINING.
5. ALL DIMENSIONS SHALL BE VERIFIED AT THE JOB BY THE GENERAL TRADES CONTRACTOR AND EACH SUB-CONTRACTOR. THE ARCHITECT MUST BE NOTIFIED OF ANY DISCREPANCIES BEFORE PROCEEDING WITH THE WORK.
6. DIMENSIONS ARE TO FACE OF MASONRY OR TO FINISH FACE OF WALL UNLESS NOTED.
7. ALL CONNECTIONS ARE TO DEVELOP THE FULL STRENGTH OF THE FRAMING MEMBERS UNLESS OTHERWISE APPROVED.
8. PROVIDE LINTELS OF ADEQUATE SIZE FOR ANY OPENINGS NOT SPECIFICALLY INDICATED, FOR DUCTWORK, PIPES, LOUVERS, GRILLS, DAMPERS, ETC..
9. DO NOT CUT AND PATCH WORK WHICH WILL IMPAIR THE STRUCTURES LOAD CARRYING CAPACITY OR REDUCE THE LOAD/DEFLECTION RATIO.
10. SIZE AND LOCATION OF ALL FLOOR, WALL OR ROOF OPENINGS TO BE VERIFIED WITH TRADE AFFECTED BEFORE PROCEEDING WITH WORK.
11. THE GENERAL CONTRACTOR SHALL COMPLY WITH ALL BUILDING CODE REQUIREMENTS OF THE LOCAL GOVERNING AUTHORITY, AND SHALL OBTAIN AND PAY FOR ALL REQUIRED PERMITS, FEES, AND INSPECTIONS, WITH THE EXCEPTION OF FEES REQUIRED FOR THE PLUMBING, H.V.A.C., AND ELECTRICAL PORTIONS OF THE WORK, WHICH ARE THE RESPONSIBILITY OF THE RESPECTIVE SUBCONTRACTORS.
12. ALL WORK SHALL CONFORM TO THE CURRENT EDITIONS OF STATE AND LOCAL CODES, AND ANY OTHER REGULATING AGENCIES WHICH HAVE THE AUTHORITY OVER ANY PORTION OF THE WORK.
13. CONTRACTOR TO FIELD VERIFY ALL EXISTING CONDITIONS AT PROJECT LOCATION PRIOR TO SUBMISSION OF BID. NOTIFY THE OWNER OF ANY CONDITIONS WHICH WOULD REQUIRE DEVIATION FROM THE CONSTRUCTION DRAWINGS.
14. SHOULD THERE BE DISCREPANCIES OR OMISSIONS IN THE SPECIFICATIONS OR DRAWINGS, OR DOUBT AS TO THEIR MEANING OR INTENT, THE OWNER SHALL BE NOTIFIED FOR CLARIFICATION BEFORE PROCEEDING WITH THE WORK. IF THE CONTRACTOR DOES NOT OBTAIN SUCH CLARIFICATION, HE SHALL REPAIR OR REPLACE ANY SUCH WORK INSTALLED WITHOUT ADDITIONAL COST TO THE OWNER.
15. THE GENERAL TRADES CONTRACTOR SHALL BE RESPONSIBLE FOR THE COORDINATION OF ALL TRADES TO ENSURE COMPLIANCE WITH THE CONTRACT DOCUMENTS AND TO PROVIDE A COMPLETE AND PROPER JOB.
16. ALL EQUIPMENT AND FURNITURE IS TO BE FURNISHED AND INSTALLED BY THE TENANT(S). THE CONTRACTOR SHALL COORDINATE INSTALLATION WITH THE OWNER.
17. WHERE DISSIMILAR METALS WILL COME INTO CONTACT WITH EACH OTHER AND WHERE TREATED LUMBER WILL COME INTO CONTACT WITH METAL SURFACES, PROVIDE ISOLATION/ PROTECTION AGAINST GALVANIC ACTION (ELECTROLYSIS).
18. WHERE ALUMINUM SURFACES WILL COME INTO CONTACT WITH MORTAR AND GROUT, PROVIDE ISOLATION/PREVENTION AGAINST METAL DETERIORATION.
19. PAINT ALL UNFINISHED MATERIALS EXPOSED TO VIEW UNLESS NOTED OTHERWISE.
20. COORDINATE ALL EXISTING MATERIAL DEMOLITION WITH NEW WORK. PATCH ADJACENT FINISHES TO MATCH EXISTING.

ABBREVIATIONS

A.B.	ANCHOR BOLT
A.P.	ACCESS PANEL
ACOUS	ACOUSTICAL
A.F.F.	ABOVE FINISH FLOOR
ADJ	ADJACENT
AGGR	AGGREGATE
A.C.	AIR CONDITIONING
ALT	ALTERNATE
AL	ALUMINUM
L	ANGLE
APPD	APPROVED
APPROX	APPROXIMATE
ARCH	ARCHITECTURAL
A.D.	AREA DRAIN
ASPH	ASPHALT
@	AT
BRG	BEARING
BM	BEAM
BITUM	BITUMINOUS
BLK	BLOCK
BLKG	BLOCKING
BD	BOARD
BOT	BOTTOM
BLDG	BUILDING
C.B.	CATCH BASIN/FIELD DRAIN
C.J.	CONTROL JOINT
CLKG	CAULKING
CLG	CEILING
CEM	CEMENT
C.O.	CLEAN OUT
CTR	CENTER
℄	CENTER LINE
CLR	CLEAR
COL	COLUMN
CONC	CONCRETE
CONN	CONNECTION
CONST	CONSTRUCTION
CONTR	CONTRACT or CONTRACTOR
CRS	COURSE
DEMO	DEMOLITION or DEMOLISH
DET	DETAIL
DIA	DIAMETER
DIM	DIMENSION
DR	DOOR
D.O.	DOOR OPENING
DBL	DOUBLE
DWG	DRAWING
D.F.	DRINKING FOUNTAIN
E	EAST
EA	EACH
ELEC	ELECTRICAL
EWC	ELECTRIC WATER COOLER
EP	ELECTRICAL PANELBOARD
EL	ELEVATION
ELV	ELEVATOR
EMER	EMERGENCY
EQ	EQUAL
EQPT	EQUIPMENT
EXIST	EXISTING
EXP	EXPANSION
E.J.	EXPANSION JOINT
EXPO	EXPOSED
EXT	EXTERIOR
F.O.C.	FACE OF CONCRETE
F.O.F.	FACE OF FINISH
F.O.S.	FACE OF STUD
FIN	FINISH
F.A.	FIRE ALARM
F.E.	FIRE EXTINGUISHER
F.E.C.	FIRE EXTINGUISHER CABINET
FPRF	FIREPROOF
FLG	FLASHING
F.B.	FLAT BAR
FL	FLOOR
F.D.	FLOOR DRAIN
FLUOR	FLUORESCENT
FT	FOOT or FEET
FTG	FOOTING
FDN	FOUNDATION
FRM	FRAME
FRMG	FRAMING
F.S.	FULL SIZE
FSW	FIRE SEPARATION WALL
FURR	FURRING
GA	GAUGE
GALV	GALVANIZED
G.T.C.	GEN. TRADES CONTRACTOR
GEN	GENERAL
GL	GLASS or GLAZING
GD	GRADE or GRADING
GND	GROUND
GYP	GYPSUM
HDW	HARDWARE
HDR	HEADER
HTG	HEATING
HVAC	HEATING, VENTILATING, AIR CONDITIONING
HGT	HEIGHT
H.C.	HOLLOW CORE
H.M.	HOLLOW METAL
HR	HOUR
INCL	INCLUDE
I.D.	INSIDE DIAMENTER
INS	INSULATE or INSULATION
INT	INTERIOR
JT.	JOINT
L.L.V.	LONG LEG VERTICAL
L.H.	LEFT HAND
LGTH	LENGTH
LTL	LINTEL
MFR	MANUFACTURER
MAS	MASONRY
M.O.	MASONRY OPENING
MAX	MAXIMUM
MECH	MECHANICAL
MEMB	MEMBRANE
MTL	METAL
MIN	MINIMUM
MISC	MISCELLANEOUS
MTD	MOUNTED
MUL	MULLION
NOM	NOMINAL
N	NORTH
N.I.C.	NOT IN CONTRACT
N.T.S.	NOT TO SCALE
NO or #	NUMBER
O.C.	ON CENTER
OPNG	OPENING
OPP	OPPOSITE OR OPPOSITE HAND
O.D.	OUTSIDE DIAMETER
OA	OVERALL
O/O	OUT TO OUT
PR	PAIR
PNL	PANEL
PL	PLATE
PLYWD	PLYWOOD
PT	POINT
P.S.I.	POUNDS PER SQUARE INCH
P.C.	PRECAST CONCRETE or PORTLAND CEMENT
R	RADIUS
REF	REFERENCE
REINF	REINFORCED
REQD	REQUIRED
RES	RESILIENT
R.A.	RETURN AIR
R.H.	RIGHT HAND
R.O.W.	RIGHT OF WAY
R	RISER
R.D.	ROOF DRAIN
RM	ROOM
R.O.	ROUGH OPENING
SECT	SECTION
SCHED	SCHEDULE
SHTG	SHEATHING
SHT	SHEET
SG	SAFETY GLASS
SH	SHELL
SIM	SIMILAR
S.C.	SOLID CORE
S	SOUTH
S.F.	SQUARE FEET OR FOOT
SPEC	SPECIFICATIONS
SQ	SQUARE
S.S.	STAINLESS STEEL
STD	STANDARD
STL	STEEL
STRL	STRUCTURAL
SYM	SYMMETRICAL
	TREAD
TEL	TELEPHONE
THK	THICK
T.C.	TOP OF CURB
T.P.	TOP OF PAVEMENT
T.W.	TOP OF WALL
T & G	TOUNGE AND GROOVE
TYP	TYPICAL
UNF	UNFINISHED
U.N.O.	UNLESS NOTED OTHERWISE
V.B.	VAPOR BARRIER
VCT	VINYL COMPOSITE TILE
VERT	VERTICAL
WP	WATERPROOF
WT	WEIGHT
W	WEST
WTD	WIDTH
W/	WITH
W/O	WITHOUT
WD	WOOD

MATERIALS LEGEND

- EARTH
- COMPACTED GRANULAR FILL
- INSULATION (BATT, LOOSE, OR FRICTION)
- CONCRETE
- CONCRETE MASONRY UNITS
- STEEL
- RIGID INSULATION
- LUMBER (ROUGH)
- LUMBER (FINISHED)
- STONE
- BRICK
- DRYWALL OR PLASTER
- PLYWOOD
- OTHERS AS NOTED DETAILS

NOTE:
MATERIAL SYMBOLS ARE OFFICE STANDARDS & ARE NOT ALL NECESSARILY INCLUDED.

DRAWING SYMBOLS

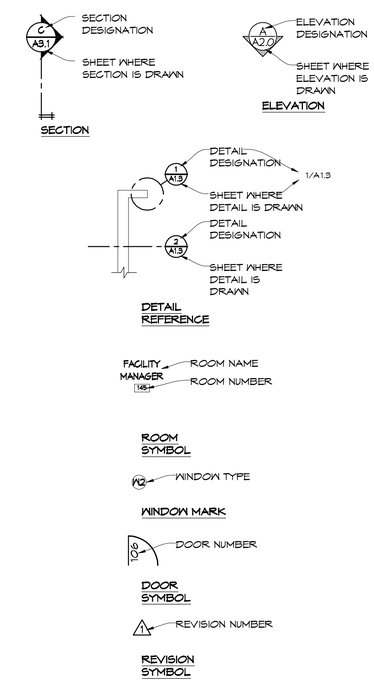

BRIDGE POINTE
RETAIL CENTER
IMPROVEMENTS

NEYER PROPERTIES

6400 - 6550 Riverside Drive
Dublin, Ohio 43017

COMMISSION NUMBER: 1205

TRIAD ARCHITECTS
936 Eastwind Drive, Suite 202
Columbus, Ohio 43081
Phone: (614) 942-1050
Fax: (614) 942-1059
main@triadarchitects.com

DATE:
9/25/2012 - PERMIT SET

SEAL:
STATE OF OHIO
BRENT T. FOLEY
14892
REGISTERED ARCHITECT

BRENT T. FOLEY, LIC. 14892
EXP: DEC 31, 2012

GENERAL NOTES, CODE DATA, AND TYPICAL INFORMATION

DRAWN BY: AML
CHECKED BY: BTF/ZP

A0.2

P:\Pro-12\1205-Equity Bridge Pointe\100-Cad\20 Current Drawings\1205-A0.2-CODE DATA.dwg, 9/25/2012 10:27:58 AM

SECTION 017329 - CUTTING AND PATCHING

PART 1 - GENERAL

1.1 RELATED DOCUMENTS

A. Drawings and general provisions of the Contract, including General and Supplementary Conditions and other Specification Sections, apply to this Section.

1.2 SUMMARY

A. This Section includes procedural requirements for cutting and patching.

B. Related Sections include the following:

1. Division 02 Section "Selective Structure Demolition" for demolition of selected portions of the building.
2. Divisions 02 through 49 Sections for specific requirements and limitations applicable to cutting and patching individual parts of the Work.

1.3 DEFINITIONS

A. Cutting: Removal of in-place construction necessary to permit installation or performance of other Work.

B. Patching: Fitting and repair work required to restore surfaces to original conditions after installation of other Work.

1.4 QUALITY ASSURANCE

A. Structural Elements: Do not cut and patch structural elements in a manner that could change their load-carrying capacity or load-deflection ratio.

B. Operational Elements: Do not cut and patch operating elements and related components in a manner that results in reducing their capacity to perform as intended or that results in increased maintenance or decreased operational life or safety. Operating elements include but are not limited to the following:

1. Primary operational systems and equipment.
2. Air or smoke barriers.
3. Fire-suppression systems.
4. Mechanical systems piping and ducts.
5. Control systems.
6. Communication systems.
7. Conveying systems.
8. Electrical wiring systems.
9. Operating systems of special construction in Division 13 Sections.

C. Miscellaneous Elements: Do not cut and patch miscellaneous elements or related components in a manner that could change their load-carrying capacity, that results in reducing their capacity to perform as intended, or that results in increased maintenance or decreased operational life or safety. Miscellaneous elements include but are not limited to the following:

1. Water, moisture, or vapor barriers.
2. Membranes and flashings.
3. Exterior curtain-wall construction.
4. Equipment supports.
5. Piping, ductwork, vessels, and equipment.
6. Noise- and vibration-control elements and systems.

D. Visual Requirements: Do not cut and patch construction in a manner that results in visual evidence of cutting and patching. Do not cut and patch construction exposed on the exterior or in occupied spaces in a manner that would, in Architect's opinion, reduce the building's aesthetic qualities. Remove and replace construction that has been cut and patched in a visually unsatisfactory manner.

E. Cutting and Patching Conference: Before proceeding, meet at Project site with parties involved in cutting and patching, including mechanical and electrical trades. Review areas of potential interference and conflict. Coordinate procedures and resolve potential conflicts before proceeding.

PART 2 - PRODUCTS

2.1 MATERIALS

A. General: Comply with requirements specified in other Sections.

B. In-Place Materials: Use materials identical to in-place materials. For exposed surfaces, use materials that visually match in-place adjacent surfaces to the fullest extent possible.

1. If identical materials are unavailable or cannot be used, use materials that, when installed, will match the visual and functional performance of in-place materials.

PART 3 - EXECUTION

3.1 EXAMINATION

A. Examine surfaces to be cut and patched and conditions under which cutting and patching are to be performed.

1. Compatibility: Before patching, verify compatibility with and suitability of substrates, including compatibility with in-place finishes or primers.
2. Proceed with installation only after unsafe or unsatisfactory conditions have been corrected.

3.2 PREPARATION

A. Temporary Support: Provide temporary support of Work to be cut.

B. Protection: Protect in-place construction during cutting and patching to prevent damage. Provide protection from adverse weather conditions for portions of Project that might be exposed during cutting and patching operations.

C. Adjoining Areas: Avoid interference with use of adjoining areas or interruption of free passage to adjoining areas.

D. Existing Utility Services and Mechanical/Electrical Systems: Where existing services/systems are required to be removed, relocated, or abandoned, bypass such services/systems before cutting to minimize interruption to occupied areas.

3.3 PERFORMANCE

A. General: Employ skilled workers to perform cutting and patching. Proceed with cutting and patching at the earliest feasible time, and complete without delay.

1. Cut in-place construction to provide for installation of other components or performance of other construction, and subsequently patch as required to restore surfaces to their original condition.

B. Cutting: Cut in-place construction by sawing, drilling, breaking, chipping, grinding, and similar operations, including excavation, using methods least likely to damage elements retained or adjoining construction. If possible, review proposed procedures with original Installer; comply with original Installer's written recommendations.

1. In general, use hand or small power tools designed for sawing and grinding, not hammering and chopping. Cut holes and slots as small as possible, neatly to size required, and with minimum disturbance of adjacent surfaces. Temporarily cover openings when not in use.
2. Finished Surfaces: Cut or drill from the exposed or finished side into concealed surfaces.
3. Concrete and/or Masonry: Cut using a cutting machine, such as an abrasive saw or a diamond-core drill.
4. Excavating and Backfilling: Comply with requirements in applicable Division 31 Sections where required by cutting and patching operations.
5. Mechanical and Electrical Services: Cut off pipe or conduit in walls or partitions to be removed. Cap, valve, or plug and seal remaining portion of pipe or conduit to prevent entrance of moisture or other foreign matter after cutting.
6. Proceed with patching after construction operations requiring cutting are complete.

C. Patching: Patch construction by filling, repairing, refinishing, closing up, and similar operations following performance of other Work. Patch with durable seams that are as invisible as possible. Provide materials and comply with installation requirements specified in other Sections.

1. Inspection: Where feasible, test and inspect patched areas after completion to demonstrate integrity of installation.
2. Exposed Finishes: Restore exposed finishes of patched areas and extend finish restoration into retained adjoining construction in a manner that will eliminate evidence of patching and refinishing.
   a. Clean piping, conduit, and similar features before applying paint or other finishing materials.
   b. Restore damaged pipe covering to its original condition.
3. Floors and Walls: Where walls or partitions that are removed extend one finished area into another, patch and repair floor and wall surfaces in the new space. Provide an even surface of uniform finish, color, texture, and appearance. Remove in-place floor and wall coverings and replace with new materials, if necessary, to achieve uniform color and appearance.
   a. Where patching occurs in a painted surface, apply primer and intermediate paint coats over the patch and apply final paint coat over entire unbroken surface containing the patch. Provide additional coats until patch blends with adjacent surfaces.
4. Ceilings: Patch, repair, or rehang in-place ceilings as necessary to provide an even-plane surface of uniform appearance.
   a. Where patching occurs in a painted surface, apply primer and intermediate paint coats over the patch and apply final paint coat over entire unbroken surface containing the patch. Provide additional coats until patch blends with adjacent surfaces.
   b. Where patching occurs in a textured surface, apply texture over entire unbroken surface containing the patch so the patch blends with adjacent surfaces.
5. Where patching occurs in an acoustical panel ceiling, match size, color and texture of existing ceiling. Provide suspension system as required.
5. Exterior Building Enclosure: Patch components in a manner that restores enclosure to a weathertight condition.
6. Site Improvements: Where site improvements are removed patch to match existing adjacent surfaces.
   a. Where patching occurs in paving, match existing paving including surface marking (striping) and joint patterns.
      1) Where patching occurs in asphalt, replace with new materials to achieve uniform color and appearance.
      2) Where patching occurs in concrete, remove concrete back to nearest joint (control or isolation) and replace with new materials to achieve uniform color and appearance.

D. Cleaning: Clean areas and spaces where cutting and patching are performed. Completely remove paint, mortar, oils, putty, and similar materials.

END OF SECTION 017329

SECTION 024119 - SELECTIVE STRUCTURE DEMOLITION

PART 1 - GENERAL

1.1 RELATED DOCUMENTS

A. Drawings and general provisions of the Contract, including General and Supplementary Conditions and other Specification Sections, apply to this Section.

1.2 SUMMARY

A. This Section includes the following:

1. Demolition and removal of selected portions of building or structure.
2. Demolition and removal of selected site elements.
3. Salvage of existing items to be reused or recycled.

B. Related Sections include the following:

1. Division 01 Section "Cutting and Patching" for cutting and patching procedures.

1.3 DEFINITIONS

A. Remove: Detach items from existing construction and legally dispose of them off-site, unless indicated to be removed and salvaged or removed and reinstalled.

B. Remove and Salvage: Detach items from existing construction and deliver them to Owner ready for reuse.

C. Remove and Reinstall: Detach items from existing construction, prepare them for reuse, and reinstall them where indicated.

D. Existing to Remain: Existing items of construction that are not to be removed and that are not otherwise indicated to be removed, removed and salvaged, or removed and reinstalled.

1.4 MATERIALS OWNERSHIP

A. Historic items, relics, and similar objects including, but not limited to, cornerstones and their contents, commemorative plaques and tablets, antiques, and other items of interest or value to Owner that may be encountered during selective demolition remain Owner's property. Carefully remove and salvage each item or object in a manner to prevent damage and deliver promptly to Owner.

1.5 QUALITY ASSURANCE

A. Demolition Firm Qualifications: An experienced firm that has specialized in demolition work similar in material and extent to that indicated for this Project.

B. Refrigerant Recovery Technician Qualifications: Certified by an EPA-approved certification program.

C. Regulatory Requirements: Comply with governing EPA notification regulations before beginning selective demolition. Comply with hauling and disposal regulations of authorities having jurisdiction.

D. Standards: Comply with ANSI A10.6 and NFPA 241.

E. Predemolition Conference: Conduct conference at Project site. Review methods and procedures related to selective demolition including, but not limited to, the following:

1. Inspect and discuss condition of construction to be selectively demolished.
2. Review structural load limitations of existing structure.
3. Review and finalize selective demolition schedule and verify availability of materials, demolition personnel, equipment, and facilities needed to make progress and avoid delays.
4. Review requirements of work performed by other trades that rely on substrates exposed by selective demolition operations.
5. Review areas where existing construction is to remain and requires protection.

1.6 PROJECT CONDITIONS

A. Owner may occupy portions of building immediately adjacent to selective demolition area. Conduct selective demolition so Owner's operations will not be disrupted.

B. Conditions existing at time of inspection for bidding purpose will be maintained by Owner as far as practical.

C. Notify Architect of discrepancies between existing conditions and Drawings before proceeding with selective demolition.

D. Hazardous Materials: Hazardous materials are present in construction to be selectively demolished. A report on the presence of hazardous materials is on file for review and use. Examine report to become aware of locations where hazardous materials are present.

1. Hazardous material remediation design and abatement is the responsibility of the Contractor.

E. Storage or sale of removed items or materials on-site is not permitted.

F. Utility Service: Maintain existing utilities indicated to remain in service and protect them against damage during selective demolition operations.

1. Maintain fire-protection facilities in service during selective demolition operations.

PART 2 - PRODUCTS (Not Used)

PART 3 - EXECUTION

3.1 EXAMINATION

A. Verify that utilities have been disconnected and capped.

B. Survey existing conditions and correlate with requirements indicated to determine extent of selective demolition required.

C. Inventory and record the condition of items to be removed and reinstalled and items to be removed and salvaged.

D. When unanticipated mechanical, electrical, or structural elements that conflict with intended function or design are encountered, investigate and measure the nature and extent of conflict. Promptly submit a written report to Architect.

E. Engage a professional engineer to survey condition of building to determine whether removing any element might result in structural deficiency or unplanned collapse of any portion of structure or adjacent structures during selective demolition operations.

F. Survey of Existing Conditions: Record existing conditions by use of preconstruction photographs and/or preconstruction videotapes.

1. Before selective demolition or removal of existing building elements that will be reproduced or duplicated in final Work, make permanent record of measurements, materials, and construction details required to make exact reproduction.

G. Perform surveys as the Work progresses to detect hazards resulting from selective demolition activities.

3.2 UTILITY SERVICES AND MECHANICAL/ELECTRICAL SYSTEMS

A. Existing Services/Systems: Maintain services/systems indicated to remain and protect them against damage during selective demolition operations.

B. Service/System Requirements: Locate, identify, disconnect, and seal or cap off indicated utility services and mechanical/electrical systems serving areas to be selectively demolished.

1. Arrange to shut off indicated utilities with utility companies.
2. If services/systems are required to be removed, relocated, or abandoned, before proceeding with selective demolition provide temporary services/systems that bypass area of selective demolition and that maintain continuity of services/systems to other parts of building.
3. Cut off pipe or conduit in walls or partitions to be removed. Cap, valve, or plug and seal remaining portion of pipe or conduit after bypassing.
   a. Where entire wall is to be removed, existing services/systems may be removed with removal of the wall.

3.3 PREPARATION

A. Site Access and Temporary Controls: Conduct selective demolition and debris-removal operations to ensure minimum interference with roads, streets, walks, walkways, and other adjacent occupied and used facilities.

1. Comply with requirements of the authorities having jurisdiction.

B. Temporary Facilities: Provide temporary barricades and other protection required to prevent injury to people and damage to adjacent buildings and facilities to remain.

1. Provide protection to ensure safe passage of people around selective demolition area and to and from occupied portions of building.
2. Provide temporary weather protection, during interval between selective demolition of existing construction on exterior surfaces and new construction, to prevent water leakage and damage to structure and interior areas.
3. Protect walls, ceilings, floors, and other existing finish work that are to remain or that are exposed during selective demolition operations.
4. Cover and protect furniture, furnishings, and equipment that have not been removed.

C. Temporary Shoring: Provide and maintain shoring, bracing, and structural supports as required to preserve stability and prevent movement, settlement, or collapse of construction and finishes to remain, and to prevent unexpected or uncontrolled movement or collapse of construction being demolished.

1. Strengthen or add new supports when required during progress of selective demolition.

3.4 SELECTIVE DEMOLITION, GENERAL

A. General: Demolish and remove existing construction only to the extent required by new construction and as indicated. Use methods required to complete the Work within limitations of governing regulations and as follows:

1. Proceed with selective demolition systematically, from higher to lower level. Complete selective demolition operations above each floor or tier before disturbing supporting members on the next lower level.
2. Neatly cut openings and holes plumb, square, and true to dimensions required. Use cutting methods least likely to damage construction to remain or adjoining construction. Use hand tools or small power tools designed for sawing or grinding, not hammering and chopping, to minimize disturbance of adjacent surfaces. Temporarily cover openings to remain.
3. Cut or drill from the exposed or finished side into concealed surfaces to avoid marring existing finished surfaces.
4. Do not use cutting torches until work area is cleared of flammable materials. At concealed spaces, such as duct and pipe interiors, verify condition and contents of hidden space before starting flame-cutting operations. Maintain fire watch and portable fire-suppression devices during flame-cutting operations.
5. Maintain adequate ventilation when using cutting torches.
6. Remove decayed, vermin-infested, or otherwise dangerous or unsuitable materials and promptly dispose of off-site.
7. Remove structural framing members and lower to ground by method suitable to avoid free fall and to prevent ground impact or dust generation.
8. Locate selective demolition equipment and remove debris and materials so as not to impose excessive loads on supporting walls, floors, or framing.
9. Dispose of demolished items and materials promptly.

B. Removed and Salvaged Items:

1. Clean salvaged items.
2. Pack or crate items after cleaning. Identify contents of containers.
3. Store items in a secure area until delivery to Owner.
4. Transport items to Owner's storage area designated by Owner.
5. Protect items from damage during transport and storage.

C. Removed and Reinstalled Items:

1. Clean and repair items to functional condition adequate for intended reuse. Paint equipment to match new equipment.
2. Pack or crate items after cleaning and repairing. Identify contents of containers.
3. Protect items from damage during transport and storage.
4. Reinstall items in locations indicated. Comply with installation requirements for new materials and equipment. Provide connections, supports, and miscellaneous materials necessary to make item functional for use indicated.

D. Existing Items to Remain: Protect construction indicated to remain against damage and soiling during selective demolition. When permitted by Architect, items may be removed to a suitable, protected storage location during selective demolition and reinstalled in their original locations after selective demolition operations are complete.

3.5 SELECTIVE DEMOLITION PROCEDURES FOR SPECIFIC MATERIALS

A. Concrete: Demolish in small sections. Cut concrete to a depth of at least 3/4 inch (19 mm) at junctures with construction to remain, using power-driven saw. Dislodge concrete from reinforcement at perimeter of areas being demolished, cut reinforcement, and then remove remainder of concrete indicated for selective demolition. Neatly trim openings to dimensions indicated.

B. Masonry: Demolish in small sections. Cut masonry at junctures with construction to remain, using power-driven saw, then remove masonry between saw cuts.

C. Concrete Slabs-on-Grade: Saw-cut perimeter of area to be demolished, then break up and remove.

D. Resilient Floor Coverings: Remove floor coverings and adhesive according to recommendations in RFCI-WP and its Addendum.

1. Remove residual adhesive and prepare substrate for new floor coverings by one of the methods recommended by RFCI.

E. Roofing: Remove no more existing roofing than can be covered in one day by new roofing and so that building interior remains watertight and weathertight. Refer to Division 07 Section for new roofing requirements.

1. Remove existing roof membrane, flashings, copings, and roof accessories.
2. Remove existing roofing system down to substrate.

F. Air-Conditioning Equipment: Remove equipment without releasing refrigerants.

3.6 DISPOSAL OF DEMOLISHED MATERIALS

A. General: Except for items or materials indicated to be reused, salvaged, reinstalled, or otherwise indicated to remain Owner's property, remove demolished materials from Project site and legally dispose of them in an EPA-approved landfill.

1. Do not allow demolished materials to accumulate on-site.
2. Remove and transport debris in a manner that will prevent spillage on adjacent surfaces and areas.
3. Remove debris from elevated portions of building by chute, hoist, or other device that will convey debris to grade level in a controlled descent.

B. Burning: Do not burn demolished materials.

C. Disposal: Transport demolished materials off Owner's property and legally dispose of them.

3.7 CLEANING

A. Clean adjacent structures and improvements of dust, dirt, and debris caused by selective demolition operations. Return adjacent areas to condition existing before selective demolition operations began.

END OF SECTION 024119

SECTION 033000 - CAST-IN-PLACE CONCRETE

PART 1 - GENERAL

1.1 RELATED DOCUMENTS

A. Drawings and general provisions of the Contract, including General and Supplementary Conditions and Specification Sections, apply to this Section.

1.2 SUMMARY

A. Section includes cast-in -place concrete, including formwork, reinforcement, concrete materials, mixture design, placement procedures, and finishes, for the following:

1. Footings.
2. Curbs.

1.3 DEFINITIONS

A. Cementitious Materials: Portland cement alone or in combination with one or more of the following: blended hydraulic cement, fly ash and other pozzolans, ground granulated blast-furnace slag, and silica fume; subject to compliance with requirements.

1.4 QUALITY ASSURANCE

A. Manufacturer Qualifications: A firm experienced in manufacturing ready-mixed concrete products and that complies with ASTM C 94/C 94M requirements for production facilities and equipment.

B. Testing Agency Qualifications: An independent agency, acceptable to authorities having jurisdiction, qualified according to ASTM C 1077 and ASTM E 329 for testing indicated.

1. Personnel conducting field tests shall be qualified as ACI Concrete Field Testing Technician, Grade 1, according to ACI CP-1 or an equivalent certification program.
2. Personnel performing laboratory tests shall be ACI-certified Concrete Strength Testing Technician and Concrete Laboratory Testing Technician - Grade I. Testing Agency laboratory supervisor shall be an ACI-certified Concrete Laboratory Testing Technician - Grade II.

C. Source Limitations: Obtain each type or class of cementitious material of the same brand from the same manufacturer's plant, obtain aggregate from single source, and obtain admixtures from single source from single manufacturer.

D. ACI Publications: Comply with the following unless modified by requirements in the Contract Documents:

1. ACI 301, "Specifications for Structural Concrete,"
2. ACI 117, "Specifications for Tolerances for Concrete Construction and Materials."
3. ACI 318, "Building Code Requirements for Structural Concrete."
4. ACI Detailing Manual, 1994 (sp. 66).
5. ACI 347, "Guide to Formwork for Concrete"
6. CRSI "Manual of Standard Practice"
7. ACI 305, "Hot Weather Concreting"
8. ACI 306, "Cold Weather Concreting"

E. Concrete Testing Service: Engage a qualified independent testing agency to perform material evaluation tests and to design concrete mixtures.

PART 2 - PRODUCTS

2.1 FORM MATERIALS

A. Rough-Formed Concrete: Plywood, lumber, metal, or another approved material. Provide lumber dressed on at least two edges and one side for tight fit.

B. Form-Release Agent: Commercially formulated form-release agent that will not bond with, stain, or adversely affect concrete surfaces and will not impair subsequent treatments of concrete surfaces.

C. Form Ties: Factory-fabricated, removable or snap-off metal or glass-fiber-reinforced plastic form ties designed to resist lateral pressure of fresh concrete on forms and to prevent spalling of concrete on removal.

1. Furnish units that will leave no corrodible metal closer than 1-1/2 inch to the plane of exposed concrete surface.
2. Furnish ties that, when removed, will leave holes no larger than 1 inch (25 mm) in diameter in concrete surface.

2.2 STEEL REINFORCEMENT

A. Epoxy-Coated Reinforcing Bars: ASTM A 615/A 615M, Grade 60 (Grade 420) or ASTM A 706/A 706M, deformed bars. ASTM A 775/A 775M or ASTM A 934/A 934M, epoxy coated, with less than 2 percent damaged coating in each 12-inch (300-mm) bar length.

B. Epoxy-Coated Wire: ASTM A 884/A 884M, Class A, Type 1 coated, as-drawn, plain or deformed-steel wire, with less than 2 percent damaged coating in each 12-inch (300-mm) wire length.

2.3 REINFORCEMENT ACCESSORIES

A. Epoxy Repair Coating: Liquid, two-part, epoxy repair coating; compatible with epoxy coating on reinforcement and complying with ASTM A 775/A 775M.

B. Bar Supports: Bolsters, chairs, spacers, and other devices for spacing, supporting, and fastening reinforcing bars and welded wire reinforcement in place. Manufacture bar supports from steel wire, plastic, or precast concrete according to CRSI's "Manual of Standard Practice," of greater compressive strength than concrete and as follows:

2.4 CONCRETE MATERIALS

A. Cementitious Material: Use the following cementitious materials, of the same type, brand, and source, throughout Project:

1. Portland Cement: ASTM C 150, Type I
   a. Fly Ash: ASTM C 618, Class F

B. Normal-Weight Aggregates: ASTM C 33, Class 3S coarse aggregate or better, graded. Provide aggregates from a single source with documented service record data of at least 10 years' satisfactory service in similar applications and service conditions using similar aggregates and cementitious materials.

1. Coarse-Aggregate Size: No. 57

C. Water: ASTM C 94/C 94M and potable.

2.5 ADMIXTURES

A. Air-Entraining Admixture: ASTM C 260.

B. Chemical Admixtures: Provide admixtures certified by manufacturer to be compatible with other admixtures and that will not contribute water-soluble chloride ions exceeding those permitted in hardened concrete. Do not use calcium chloride or admixtures containing calcium chloride.

1. Water-Reducing Admixture: ASTM C 494/C 494M, Type A.
2. Retarding Admixture: ASTM C 494/C 494M, Type B.
3. Water-Reducing and Retarding Admixture: ASTM C 494/C 494M, Type D.
4. High-Range, Water-Reducing Admixture: ASTM C 494/C 494M, Type F.
5. High-Range, Water-Reducing and Retarding Admixture: ASTM C 494/C 494M, Type G.

2.6 CURING MATERIALS

A. Absorptive Cover: AASHTO M 182, Class 2, burlap cloth made from jute or kenaf, weighing approximately 9 oz./sq. yd. (305 g/sq. m) when dry.

B. Moisture-Retaining Cover: ASTM C 171, polyethylene film or white burlap-polyethylene sheet.

C. Water: Potable.

D. Clear Curing Compound: ASTM C 309, Type 1, Class B, nondissipating. Moisture loss not to exceed 0.39 kg/sq m. in 72 hours.

2.7 RELATED MATERIALS

A. Bonding Agent: ASTM C 1059/C 1059M, Type II, non-redispersible, acrylic emulsion or styrene butadiene.

2.8 CONCRETE MIXTURES, GENERAL

A. Prepare design mixtures for each type and strength of concrete, proportioned on the basis of laboratory trial mixture or field test data, or both, according to ACI 301.

1. Use a qualified independent testing agency for preparing and reporting proposed mixture designs based on laboratory trial mixtures.

B. Cementitious Materials: Use fly ash as needed to reduce the total amount of portland cement, which would otherwise be used, by not less than 40 percent. Limit percentage, by weight, of cementitious materials other than portland cement in concrete as follows:

1. Fly Ash: 15 percent.

C. Admixtures: Use admixtures according to manufacturer's written instructions.

1. Use water-reducing or high-range water-reducing or plasticizing admixture in concrete, as required, for placement and workability.
2. Use water-reducing and retarding admixture when required by high temperatures, low humidity, or other adverse placement conditions.

2.9 CONCRETE MIXTURES FOR BUILDING ELEMENTS

A. Footings: Proportion normal-weight concrete mixture as follows:

1. Minimum Compressive Strength: 3500 psi at 28 days.
2. Slump Limit: 4 inches (100 mm) plus or minus 1 inch (25 mm). if no high range admixture is used. If high range admixture is used slump limit to be 2 inches prior to addition of high range admixture; maximum slump after addition of high range admixture is to be 8 inches.

B. Curbs: Proportion mixtures to provide normal-weight concrete with the following properties:

1. Compressive Strength: 5000 psi at 28 days.
2. Maximum Water-Cementitious Materials Ratio at Point of Placement: 0.40..
3. Slump Limit: 4 inches (100 mm), plus or minus 1 inch (25 mm). If high range admixture is used slump limit to be 2 inches prior to addition of high range admixture; maximum slump after addition of high range admixture to be 8 inches.

2.10 FABRICATING REINFORCEMENT

A. Fabricate steel reinforcement according to CRSI's "Manual of Standard Practice."

2.11 CONCRETE MIXING

A. Ready-Mixed Concrete: Measure, batch, mix, and deliver concrete according to ASTM C 94/C 94M and ASTM C 1116/C 1116M, and furnish batch ticket information.

1. When air temperature is between 85 and 90 deg F (30 and 32 deg C), reduce mixing and delivery time from 1-1/2 hours to 75 minutes; when air temperature is above 90 deg F (32 deg C), reduce mixing and delivery time to 60 minutes.

PART 3 - EXECUTION

3.1 FORMWORK

A. Design, erect, shore, brace, and maintain formwork, according to ACI 301, to support vertical, lateral, static, and dynamic loads, and construction loads that might be applied, until structure can support such loads.

B. Construct formwork so concrete members and structures are of size, shape, alignment, elevation, and position indicated, within tolerance limits of ACI 117.

C. Limit concrete surface irregularities, designated by ACI 347 as abrupt or gradual, as follows:

1. Class D, 1 inch (25 mm) for rough-formed finished surfaces.

D. Construct forms tight enough to prevent loss of concrete mortar.

E. Fabricate forms for easy removal without hammering or prying against concrete surfaces. Provide crush or wrecking plates where stripping may damage cast concrete surfaces. Provide top forms for inclined surfaces steeper than 1.5 horizontal to 1 vertical.

1. Install keyways, reglets, recesses, and the like, for easy removal.
2. Do not use rust-stained steel form-facing material.

F. Chamfer exterior corners and edges of permanently exposed concrete.

G. Clean forms and adjacent surfaces to receive concrete. Remove chips, wood, sawdust, dirt, and other debris just before placing concrete.

H. Retighten forms and bracing before placing concrete, as required, to prevent mortar leaks and maintain proper alignment.

I. Coat contact surfaces of forms with form-release agent, according to manufacturer's written instructions, before placing reinforcement.

J. Footings may be cast against earth cuts when soil conditions permit.

3.2 EMBEDDED ITEMS

A. Place and secure anchorage devices and other embedded items required for adjoining work that is attached to or supported by cast-in-place concrete. Use setting drawings, templates, diagrams, instructions, and directions furnished with items to be embedded.

3.3 REMOVING AND REUSING FORMS

A. General: Formwork for sides of beams, walls, columns, and similar parts of the Work that does not support weight of concrete may be removed after cumulatively curing at not less than 50 deg F (10 deg C) for 24 hours after placing concrete. Concrete has to be hard enough to not be damaged by form-removal operations and curing and protection operations need to be maintained.

1. Remove forms only if shores have been arranged to permit removal of forms without loosening or disturbing shores.

B. Clean and repair surfaces of forms to be reused in the Work. Split, frayed, delaminated, or otherwise damaged form-facing material will not be acceptable for exposed surfaces. Apply new form-release agent.

C. When forms are reused, clean surfaces, remove fins and laitance, and tighten to close joints. Align and secure joints to avoid offsets. Do not use patched forms for exposed concrete surfaces unless approved by Architect.

3.4 STEEL REINFORCEMENT

A. General: Comply with CRSI's "Manual of Standard Practice" for placing reinforcement.

B. Clean reinforcement of loose rust and mill scale, earth, ice, and other foreign materials that would reduce bond to concrete.

C. Accurately position, support, and secure reinforcement against displacement. Locate and support reinforcement with bar supports to maintain minimum concrete cover. Do not tack weld crossing reinforcing bars.

D. Set wire ties with ends directed into concrete, not toward exposed concrete surfaces.

E. Epoxy-Coated Reinforcement: Repair cut and damaged epoxy coatings with epoxy repair coating according to ASTM D 3963/D 3963M. Use epoxy-coated steel wire ties to fasten epoxy-coated steel reinforcement.

3.5 CONCRETE PLACEMENT

A. Before placing concrete, verify that installation of formwork, reinforcement, and embedded items is complete and that required inspections have been performed.

B. Do not add water to concrete during delivery, at Project site, or during placement unless approved by Testing Agency.

C. Deposit concrete continuously in one layer or in horizontal layers of such thickness that no new concrete will be placed on concrete that has hardened enough to cause seams or planes of weakness. If a section cannot be placed continuously, provide construction joints as indicated. Deposit concrete to avoid segregation.

1. Deposit concrete in horizontal layers of depth to not exceed formwork design pressures and in a manner to avoid inclined construction joints.
2. Consolidate placed concrete with mechanical vibrating equipment according to ACI 301.
3. Do not use vibrators to transport concrete inside forms. Insert and withdraw vibrators vertically at uniformly spaced locations to rapidly penetrate placed layer and at least 6 inches (150 mm) into preceding layer. Do not insert vibrators into lower layers of concrete that have begun to lose plasticity. At each insertion, limit duration of vibration to time necessary to consolidate concrete and complete embedment of reinforcement and other embedded items without causing mixture constituents to segregate.

D. Cold-Weather Placement: Comply with ACI 306.1 and as follows. Protect concrete work from physical damage or reduced strength that could be caused by frost, freezing actions, or low temperatures.

1. When average high and low temperature is expected to fall below 40 deg F (4.4 deg C) for three successive days, maintain delivered concrete mixture temperature within the temperature range required by ACI 301.
2. Do not use frozen materials or materials containing ice or snow. Do not place concrete on frozen subgrade or on subgrade containing frozen materials.
3. Do not use calcium chloride, salt, or other materials containing antifreeze agents or chemical accelerators unless otherwise specified and approved in mixture designs.

E. Hot-Weather Placement: Comply with ACI 301 and as follows:

1. Maintain concrete temperature below 90 deg F (32 deg C) at time of placement. Chilled mixing water or chopped ice may be used to control temperature, provided water equivalent of ice is calculated to total amount of mixing water. Using liquid nitrogen to cool concrete is Contractor's option.
2. Fog-spray forms, steel reinforcement, and subgrade just before placing concrete. Keep subgrade uniformly moist without standing water, soft spots, or dry areas.

3.6 CONCRETE PROTECTING AND CURING

A. General: Protect freshly placed concrete from premature drying and excessive cold or hot temperatures. Comply with ACI 306.1 for cold-weather protection and ACI 301 for hot-weather protection during curing.

B. Evaporation Retarder: Apply evaporation retarder to unformed concrete surfaces if hot, dry, or windy conditions cause moisture loss approaching 0.2 lb/sq. ft. x h (1 kg/sq. m x h) before and during finishing operations. Apply according to manufacturer's written instructions after placing, screeding, and bull floating or darbying concrete, but before float finishing.

C. Formed Surfaces: Cure formed concrete surfaces. If forms remain during curing period, moist cure after loosening forms. If removing forms before end of curing period, continue curing for the remainder of the curing period.

D. Unformed Surfaces: Begin curing immediately after finishing concrete. Cure unformed surfaces, including floors and slabs, concrete floor toppings, and other surfaces.

E. Cure concrete according to ACI 308.1, by one or a combination of the following methods:

1. Moisture Curing: Keep surfaces continuously moist for not less than seven days with the following materials:
   a. Water.
   b. Continuous water-fog spray.
   c. Absorptive cover, water saturated, and kept continuously wet. Cover concrete surfaces and edges with 12-inch (300-mm) lap over adjacent absorptive covers.
2. Curing Compound: Apply uniformly in continuous operation by power spray or roller according to manufacturer's written instructions. Recoat areas subjected to heavy rainfall within three hours after initial application. Maintain continuity of coating and repair damage during curing period.

3.7 CONCRETE REPAIRS

A. Defective Concrete: Remove and replace defective concrete.

3.8 FIELD QUALITY CONTROL

A. Testing and Inspecting: Engage a qualified testing and inspecting agency to perform tests and inspections and to submit reports.

B. Inspections:

1. Steel reinforcement placement.
2. Verification of use of required design mixture.
3. Concrete placement, including conveying and depositing.
4. Curing procedures and maintenance of curing temperature.
5. Verification of concrete strength before removal of shores and forms from beams and slabs.

(CONTINUED NEXT SHEET)

BRIDGE POINTE RETAIL CENTER IMPROVEMENTS

NEYER PROPERTIES

6400 - 6550 Riverside Drive
Dublin, Ohio 43017

COMMISSION NUMBER: 1205

TRIAD ARCHITECTS
936 Eastwind Drive, Suite 202
Columbus, Ohio 43081
Phone: (614) 942-1050
Fax: (614) 942-1059
main@triadarchitects.com

DATE:
9/25/2012 - PERMIT SET

SEAL:
STATE OF OHIO
BRENT T. FOLEY
14892
REGISTERED ARCHITECT

BRENT T. FOLEY, LIC. 14892
EXP: DEC 31, 2012

SPECIFICATIONS

DRAWN BY: AML
CHECKED BY: BTF/ZP

A0.3

P:\Pro-12\1205-Equity Bridge Pointe\100-Cad\20 Current Drawings\1205-Bridge Pointe-Sheet Specifications.dwg, 9/25/2012 10:28:08 AM

(033000 - CAST-IN-PLACE CONCRETE - CONTINUED FROM PREVIOUS SHEET)

C. Concrete Tests: Testing of composite samples of fresh concrete obtained according to ASTM C 172 shall be performed according to the following requirements:

1. Testing Frequency: Obtain at least one composite sample for each 100 cu. yd. (76 cu. m) or fraction thereof of each concrete mixture placed each day.
   a. When frequency of testing will provide fewer than five compressive-strength tests for each concrete mixture, testing shall be conducted from at least five randomly selected batches or from each batch if fewer than five are used.
2. Slump: ASTM C 143/C 143M; one test at point of placement for each composite sample, but not less than one test for each day's pour of each concrete mixture. Perform additional tests when concrete consistency appears to change.
3. Concrete Temperature: ASTM C 1064/C 1064M; one test hourly when air temperature is 40 deg F (4.4 deg C) and below and when 80 deg F (27 deg C) and above, and one test for each composite sample.
4. Compression Test Specimens: ASTM C 31/C 31M.
   a. Cast and laboratory cure two sets of two standard cylinder specimens for each composite sample.
5. Compressive-Strength Tests: ASTM C 39/C 39M; test one set of two laboratory-cured specimens at 7 days and one set of two specimens at 28 days.
   a. Test one set of two field-cured specimens at 7 days and one set of two specimens at 28 days.
   b. A compressive-strength test shall be the average compressive strength from a set of two specimens obtained from same composite sample and tested at age indicated.
6. When strength of field-cured cylinders is less than 85 percent of companion laboratory-cured cylinders, Contractor shall evaluate operations and provide corrective procedures for protecting and curing in-place concrete.
7. Strength of each concrete mixture will be satisfactory if every average of any three consecutive compressive-strength tests equals or exceeds specified compressive strength and no compressive-strength test value falls below specified compressive strength by more than 500 psi (3.4 MPa).
8. Test results shall be reported in writing to Architect, concrete manufacturer, and Contractor within 48 hours of testing. Reports of compressive-strength tests shall contain Project identification name and number, date of concrete placement, name of concrete testing and inspecting agency, location of concrete batch in Work, design compressive strength at 28 days, concrete mixture proportions and materials, compressive breaking strength, and type of break for both 7- and 28-day tests.
9. Nondestructive Testing: Impact hammer, sonoscope, or other nondestructive device may be permitted by Architect but will not be used as sole basis for approval or rejection of concrete.
10. Additional Tests: Testing and inspecting agency shall make additional tests of concrete when test results indicate that slump, air entrainment, compressive strengths, or other requirements have not been met, as directed by Architect. Testing and inspecting agency may conduct tests to determine adequacy of concrete by cored cylinders complying with ASTM C 42/C 42M or by other methods as directed by Architect.
11. Additional testing and inspecting, at Contractor's expense, will be performed to determine compliance of replaced or additional work with specified requirements.
12. Correct deficiencies in the Work that test reports and inspections indicate do not comply with the Contract Documents.

END OF SECTION 033000

SECTION 042000 - UNIT MASONRY

PART 1 - GENERAL

1.1 RELATED DOCUMENTS

D. Drawings and general provisions of the Contract, including General and Supplementary Conditions and Specification Sections, apply to this Section.

1.2 SUMMARY

A. Section Includes:
1. Concrete masonry units.
2. Face brick.
3. Mortar and grout.
4. Steel reinforcing bars.
5. Masonry joint reinforcement.
6. Ties and anchors.
7. Embedded flashing.
8. Miscellaneous masonry accessories.

1.3 DEFINITIONS

A. CMU(s): Concrete masonry unit(s).

B. Reinforced Masonry: Masonry containing reinforcing steel in grouted cells.

1.4 PERFORMANCE REQUIREMENTS

A. Provide structural unit masonry that develops indicated net-area compressive strengths at 28 days.
1. Determine net-area compressive strength of masonry from average net-area compressive strengths of masonry units and mortar types (unit-strength method) according to Tables 1 and 2 in ACI 530.1/ASCE 6/TMS 602.

1.5 PRECONSTRUCTION TESTING

A. Preconstruction Testing Service: Engage a qualified independent testing agency to perform preconstruction testing indicated below. Retesting of materials that fail to comply with specified requirements shall be done at Contractor's expense.
1. Clay Masonry Unit Test: For each type of unit required, according to ASTM C 67 for compressive strength.
2. Concrete Masonry Unit Test: For each type of unit required, according to ASTM C 140 for compressive strength.
3. Mortar Test (Property Specification): For each mix required, according to ASTM C 780 for compressive strength.
4. Grout Test (Compressive Strength): For each mix required, according to ASTM C 1019.

1.6 SUBMITTALS (NOT USED)

1.7 QUALITY ASSURANCE

A. Testing Agency Qualifications: Qualified according to ASTM C 1093 for testing indicated.

B. Source Limitations for Masonry Units: Obtain exposed masonry units of a uniform texture and color, or a uniform blend within the ranges accepted for these characteristics, from single source from single manufacturer for each product required.

C. Source Limitations for Mortar Materials: Obtain mortar ingredients of a uniform quality, including color for exposed masonry, from single manufacturer for each cementitious component and from single source or producer for each aggregate.

D. Masonry Standard: Comply with ACI 530.1/ASCE 6/TMS 602 unless modified by requirements in the Contract Documents.

1.8 DELIVERY, STORAGE, AND HANDLING

A. Store masonry units on elevated platforms in a dry location. If units are not stored in an enclosed location, cover tops and sides of stacks with waterproof sheeting, securely tied. If units become wet, do not install until they are dry.

B. Store cementitious materials on elevated platforms, under cover, and in a dry location. Do not use cementitious materials that have become damp.

C. Store aggregates where grading and other required characteristics can be maintained and contamination avoided.

D. Deliver preblended, dry mortar mix in moisture-resistant containers designed for use with dispensing silos. Store preblended, dry mortar mix in delivery containers on elevated platforms, under cover, and in a dry location or in covered weatherproof dispensing silos.

E. Store masonry accessories, including metal items, to prevent corrosion and accumulation of dirt and oil.

1.9 PROJECT CONDITIONS

A. Protection of Masonry: During construction, cover tops of walls, projections, and sills with waterproof sheeting at end of each day's work. Cover partially completed masonry when construction is not in progress. Maintain protection until construction has progressed to a point where water cannot freely enter the wall.
1. Extend cover a minimum of 24 inches (600 mm) down both sides of walls and hold cover securely in place.
2. Where one wythe of multiwythe masonry walls is completed in advance of other wythes, secure cover a minimum of 24 inches (600 mm) down face next to unconstructed wythe and hold cover in place.

B. Stain Prevention: Prevent grout, mortar, and soil from staining the face of masonry to be left exposed or painted. Immediately remove grout, mortar, and soil that come in contact with such masonry.
1. Protect base of walls from rain-splashed mud and from mortar splatter by spreading coverings on ground and over wall surface.
2. Protect sills, ledges, and projections from mortar droppings.
3. Protect surfaces of window and door frames, as well as similar products with painted and integral finishes, from mortar droppings.
4. Turn scaffold boards near the wall on edge at the end of each day to prevent rain from splashing mortar and dirt onto completed masonry.

C. Cold-Weather Requirements: Do not use frozen materials or materials mixed or coated with ice or frost. Do not build on frozen substrates. Remove and replace unit masonry damaged by frost or by freezing conditions. Comply with cold-weather construction requirements contained in ACI 530.1/ASCE 6/TMS 602.
1. Cold-Weather Cleaning: Use liquid cleaning methods only when air temperature is 40 deg F (4 deg C) and higher and will remain so until masonry has dried, but not less than seven days after completing cleaning.

D. Hot-Weather Requirements: Comply with hot-weather construction requirements contained in ACI 530.1/ASCE 6/TMS 602.

PART 2 - PRODUCTS

2.1 MASONRY UNITS, GENERAL

A. Defective Units: Referenced masonry unit standards may allow a certain percentage of units to contain chips, cracks, or other defects exceeding limits stated in the standard. Do not use units where such defects will be exposed in the completed Work.

2.2 CONCRETE MASONRY UNITS

A. Shapes: Provide shapes indicated and as follows, with exposed surfaces matching exposed faces of adjacent units unless otherwise indicated.
1. Provide special shapes for lintels, corners, jambs, sashes, movement joints, headers, bonding, and other special conditions.
2. Provide bullnose units for outside corners unless otherwise indicated.

B. Integral Water Repellent: Provide units made with integral water repellent for portions of walls located below grade.
1. Integral Water Repellent: Liquid polymeric, integral water-repellent admixture that does not reduce flexural bond strength. Units made with integral water repellent, when tested according to ASTM E 514 as a wall assembly made with mortar containing integral water-repellent manufacturer's mortar additive, with test period extended to 24 hours, shall show no visible water or leaks on the back of test specimen.

C. CMUs: ASTM C 90.
1. Unit Compressive Strength: Provide units with minimum average net-area compressive strength as indicated.
2. Density Classification: Normal weight.
3. Size (Width): Manufactured to dimensions 3/8 inch less than nominal dimensions.

2.3 BRICK

A. General: Provide shapes indicated and as follows, with exposed surfaces matching finish and color of exposed faces of adjacent units:
1. For ends of sills and caps and for similar applications that would otherwise expose unfinished brick surfaces, provide units without cores or frogs and with exposed surfaces finished.
2. Provide special shapes for applications where stretcher units cannot accommodate special conditions, including those at corners, movement joints, bond beams, sashes, and lintels.
3. Provide special shapes for applications requiring brick of size, form, color, and texture on exposed surfaces that cannot be produced by sawing.
4. Provide special shapes for applications where shapes produced by sawing would result in sawed surfaces being exposed to view.

B. Face Brick: Facing brick complying with ASTM C 216.
1. Grade: SW.
2. Type: FBX or FBS.
3. Unit Compressive Strength: Provide units with minimum average net-area compressive strength of 3350 psi (23.10 MPa).
4. Initial Rate of Absorption: Less than 30 g/30 sq. in. (30 g/194 sq. cm) per minute when tested per ASTM C 67.
5. Efflorescence: Provide brick that has been tested according to ASTM C 67 and is rated "not effloresced."
6. Size (Actual Dimensions): 3-1/2 inches (89 mm) wide by 2-1/4 inches (57 mm) high by 7-1/2 inches (190 mm) long or 3-5/8 inches (92 mm) wide by 2-1/4 inches (57 mm) high by 7-5/8 inches (194 mm) long.
7. Application: Use where brick is exposed unless otherwise indicated.
8. Color and Texture: As indicated.

2.4 MORTAR AND GROUT MATERIALS

A. Portland Cement: ASTM C 150, Type I, except Type III may be used for cold-weather construction. Provide natural color or white cement as required to produce mortar color indicated.

B. Hydrated Lime: ASTM C 207, Type S.

C. Portland Cement-Lime Mix: Packaged blend of portland cement and hydrated lime containing no other ingredients.

D. Masonry Cement: ASTM C 91.

E. Mortar Cement: ASTM C 1329.

F. Mortar Pigments: Natural and synthetic iron oxides and chromium oxides, compounded for use in mortar mixes and complying with ASTM C 979. Use only pigments with a record of satisfactory performance in masonry mortar.

G. Colored Cement Product: Packaged blend made from portland cement and hydrated lime, masonry cement or mortar cement and mortar pigments, all complying with specified requirements, and containing no other ingredients.
1. Formulate blend as required to produce color indicated or, if not indicated, as selected from manufacturer's full range standard and custom.
2. Pigments shall not exceed 10 percent of portland cement by weight.
3. Pigments shall not exceed 5 percent of masonry cement or mortar cement by weight.

I. Aggregate for Mortar: ASTM C 144.
1. For mortar that is exposed to view, use washed aggregate consisting of natural sand or crushed stone.
2. For joints less than 1/4 inch (6 mm) thick, use aggregate graded with 100 percent passing the No. 16 (1.18-mm) sieve.
3. White-Mortar Aggregates: Natural white sand or crushed white stone.
4. Colored-Mortar Aggregates: Natural sand or crushed stone of color necessary to produce required mortar color.

J. Aggregate for Grout: ASTM C 404.

K. Cold-Weather Admixture: Nonchloride, noncorrosive, accelerating admixture complying with ASTM C 494/C 494M, Type C, and recommended by manufacturer for use in masonry mortar of composition indicated.

L. Water-Repellent Admixture: Liquid water-repellent mortar admixture intended for use with CMUs containing integral water repellent by same manufacturer.

M. Water: Potable.

2.5 REINFORCEMENT

A. Uncoated Steel Reinforcing Bars: ASTM A 615/A 615M or ASTM A 996/A 996M, Grade 60 (Grade 420).

B. Masonry Joint Reinforcement, General: ASTM A 951/A 951M.
1. Interior Walls: Stainless steel.
2. Exterior Walls: Stainless steel.
3. Wire Size for Side Rods: 0.187-inch (4.76-mm) diameter.
4. Wire Size for Cross Rods: 0.187-inch (4.76-mm) diameter.
5. Wire Size for Veneer Ties: 0.187-inch (4.76-mm) diameter.
6. Spacing of Cross Rods, Tabs, and Cross Ties: Not more than 16 inches (407 mm) o.c.
7. Provide in lengths of not less than 10 feet (3 m), with prefabricated corner and tee units.

C. Masonry Joint Reinforcement for Single-Wythe Masonry: Ladder type with single pair of side rods.

2.6 TIES AND ANCHORS

A. Materials: Provide ties and anchors specified in this article that are made from materials that comply with the following unless otherwise indicated.
1. Stainless-Steel Wire: ASTM A 580/A 580M, Type 316.
2. Stainless-Steel Sheet: ASTM A 666, Type 316.
3. Steel Plates, Shapes, and Bars: ASTM A 36/A 36M.
4. Stainless-Steel Bars: ASTM A 276 or ASTM a 666, Type 304.

B. Wire Ties, General: Unless otherwise indicated, size wire ties to extend at least halfway through veneer but with at least 5/8-inch (16-mm) cover on outside face. Outer ends of wires are bent 90 degrees and extend 2 inches (50 mm) parallel to face of veneer.

C. Individual Wire Ties: Rectangular units with closed ends and not less than 4 inches (100 mm) wide.
1. Wire: Fabricate from 1/4-inch- (6.35-mm-) diameter, stainless-steel wire.

D. Adjustable Anchors for Connecting to Structure: Provide anchors that allow vertical or horizontal adjustment but resist tension and compression forces perpendicular to plane of wall.

E. Adjustable Masonry-Veneer Anchors:
1. General: Provide anchors that allow vertical adjustment but resist tension and compression forces perpendicular to plane of wall, for attachment over sheathing to wood or metal studs, and as follows:
   a. Structural Performance Characteristics: Capable of withstanding a 100-lbf (445-N) load in both tension and compression without deforming or developing play in excess of 0.05 inch (1.3 mm).
2. Contractor's Option: Unless otherwise indicated, provide any of the following types of anchors:
   a. Anchor Section: Rib-stiffened, sheet metal plate with screw holes top and bottom, 2-3/4 inches (70 mm) wide by 3 inches (76 mm) high; with projecting tabs having slotted holes for inserting vertical legs of wire tie specially formed to fit anchor section.
   b. Anchor Section: Sheet metal plate, 1-1/4 inches (32 mm) wide by 9 inches (229 mm) long, with screw holes top and bottom and with raised rib-stiffened strap, 5/8 inch (16 mm) wide by 5-1/2 inches (140 mm) long, stamped into center to provide a slot between strap and plate for inserting wire tie.
   c. Anchor Section: Gasketed sheet metal plate, 1-1/4 inches (32 mm) wide by 6 inches (152 mm) long, with screw holes top and bottom; top and bottom ends bent to form pronged legs of length to match thickness of insulation or sheathing; and raised rib-stiffened strap, 5/8 inch (16 mm) wide by 6 inches (152 mm) long, stamped into center to provide a slot between strap and plate for inserting wire tie. Provide anchor manufacturer's standard, self-adhering, modified bituminous gaskets manufactured to fit behind anchor plate and extend beyond pronged legs.
   d. Fabricate sheet metal anchor sections and other sheet metal parts from [0.109-inch- (2.78-mm-) thick, stainless-steel sheet.
   e. Wire Ties: Triangular-, rectangular-, or T-shaped wire ties fabricated from 0.25-inch- (6.35-mm-) diameter, stainless-steel wire.

2.7 MISCELLANEOUS ANCHORS

F. Anchor Bolts: Headed or L-shaped steel bolts complying with ASTM A 307, Grade A (ASTM F 568M, Property Class 4.6); with ASTM A 563 (ASTM A 563M) hex nuts and, where indicated, flat washers; hot-dip galvanized to comply with ASTM A 153/A 153M, Class C; of dimensions indicated.

2.8 EMBEDDED FLASHING MATERIALS

A. Metal Flashing: Provide metal flashing complying with SMACNA's "Architectural Sheet Metal Manual" and as follows:
1. Stainless Steel: ASTM A 240/A 240M, Type 304, 0.016 inch (0.40 mm) thick.
2. Metal Drip Edge: Fabricate from stainless steel. Extend at least 3 inches (76 mm) into wall and 1/2 inch (13 mm) out from wall, with outer edge bent down 30 degrees and hemmed an coped.
   a. Basis-of-design Product: Subject to compliance with requirements provide DP-Drip Plate by Hohmann & Barnard, Inc. with optional Foam-Tite Seal and Flash-Adhere Adhesive Strip or a comparable product.

B. Flexible Flashing: Use one of the following unless otherwise indicated:
1. Copper-Laminated Flashing: 7-oz./sq. ft. (2-kg/sq. m) copper sheet bonded between 2 layers of glass-fiber cloth. Use only where flashing is fully concealed in masonry.
   a. Products: Subject to compliance with requirements, provide one of the following:
      1) Advanced Building Products Inc.; Copper Sealtite 2000.
      2) Dayton Superior Corporation, Dur-O-Wal Division; Copper Fabric Thru-Wall Flashing.
      3) Hohmann & Barnard, Inc.; H & B C-Fab Flashing.
      4) Phoenix Building Products; Type FCC-Fabric Covered Copper.
      5) Sandell Manufacturing Co., Inc.; Copper Fabric Flashing.
      6) York Manufacturing, Inc.; Multi-Flash 500.
2. Rubberized-Asphalt Flashing: Composite flashing product consisting of a pliable, adhesive rubberized-asphalt compound, bonded to a high-density, cross-laminated polyethylene film to produce an overall thickness of not less than 0.040 inch (1.02 mm).
   a. Products: Subject to compliance with requirements, provide one of the following:
      1) Advanced Building Products Inc.; Peel-N-Seal.
      2) Carlisle Coatings & Waterproofing; CCW-705-TWF Thru-Wall Flashing.
      3) Dayton Superior Corporation, Dur-O-Wal Division; Dur-O-Barrier Thru-Wall Flashing.
      4) Fiberweb, Clark Hammerbeam Corp.; Aquaflash 500.
      5) Grace Construction Products, W. R. Grace & Co. - Conn.; Perm-A-Barrier Wall Flashing.
      6) Heckmann Building Products Inc.; No. 82 Rubberized-Asphalt Thru-Wall Flashing.
      7) Hohmann & Barnard, Inc.; Textroflash.
      8) W. R. Meadows, Inc.; Air-Shield Thru-Wall Flashing.
      9) Polyguard Products, Inc.; Polyguard 400.
      10) Sandell Manufacturing Co., Inc.; Sando-Seal.
      11) Williams Products, Inc.; Everlastic MF-40.
   b. Accessories: Provide preformed corners, end dams, other special shapes, and seaming materials produced by flashing manufacturer.
3. Elastomeric Thermoplastic Flashing: Composite flashing product consisting of a polyester-reinforced ethylene interpolymer alloy.
   a. Products: Subject to compliance with requirements, provide one of the following:
      1) DuPont; Thru-Wall Flashing.
      2) Hohmann & Barnard, Inc.; Flex-Flash.
      3) Hyload, Inc.; Hyload Cloaked Flashing System.
   b. Self-Adhesive Sheet: Elastomeric thermoplastic flashing, 0.025 inch (0.64 mm) thick, with a 0.015-inch- (0.38-mm-) thick coating of adhesive.
   c. Accessories: Provide preformed corners, end dams, other special shapes, and seaming materials produced by flashing manufacturer.
4. EPDM Flashing: Sheet flashing product made from ethylene-propylene-diene terpolymer, complying with ASTM D 4637, 0.040 inch (1.0 mm) thick.
   a. Products: Subject to compliance with requirements, provide one of the following:
      1) Carlisle Coatings & Waterproofing; Pre-Kleened EPDM Thru-Wall Flashing.
      2) Firestone Specialty Products; FlashGuard.
      3) Heckmann Building Products Inc.; No. 81 EPDM Thru-Wall Flashing.
      4) Hohmann & Barnard, Inc.; Epra-Max EPDM Thru-Wall Flashing.
      5) Sandell Manufacturing Co., Inc.; EPDM Flashing.

C. Solder and Sealants for Sheet Metal Flashings:
1. Solder for Stainless Steel: ASTM B 32, Grade Sn60, with acid flux of type recommended by stainless-steel sheet manufacturer.
2. Solder for Copper: ASTM B 32, Grade Sn50, 50 percent tin and 50 percent lead.
3. Elastomeric Sealant: ASTM C 920, chemically curing silicone sealant; of type, grade, class, and use classifications required to seal joints in sheet metal flashing and trim and remain watertight.

D. Adhesives, Primers, and Seam Tapes for Flashings: Flashing manufacturer's standard products or products recommended by flashing manufacturer for bonding flashing sheets to each other and to substrates.

2.9 MISCELLANEOUS MASONRY ACCESSORIES

A. Compressible Filler: Premolded filler strips complying with ASTM D 1056, Grade 2A1; compressible up to 35 percent; of width and thickness indicated; formulated from neoprene, urethane or PVC.

B. Preformed Control-Joint Gaskets: Made from styrene-butadiene-rubber compound, complying with ASTM D 2000, Designation M2AA-805 or PVC, complying with ASTM D 2287, Type PVC-65406 and designed to fit standard sash block and to maintain lateral stability in masonry wall; size and configuration as indicated.

C. Bond-Breaker Strips: Asphalt-saturated, organic roofing felt complying with ASTM D 226, Type I (No. 15 asphalt felt).

D. Weep/Vent Products: Use one of the following unless otherwise indicated:
1. Cellular Plastic Weep/Vent: One-piece, flexible extrusion made from UV-resistant polypropylene copolymer, full height and width of head joint and depth 1/8 inch (3 mm) less than depth of outer wythe, in color selected from manufacturer's standard.
   a. Products: Subject to compliance with requirements, provide one of the following:
      1) Advanced Building Products Inc.; Mortar Maze weep vent.
      2) Blok-Lok Limited; Cell-Vent.
      3) Dayton Superior Corporation, Dur-O-Wal Division; Cell Vents.
      4) Heckmann Building Products Inc.; No. 85 Cell Vent.
      5) Hohmann & Barnard, Inc.; Quadro-Vent.
      6) Wire-Bond; Cell Vent.

E. Cavity Drainage Material: Free-draining mesh, made from polymer strands that will not degrade within the wall cavity.
1. Products: Subject to compliance with requirements, provide one of the following:
   a. Dayton Superior Corporation, Dur-O-Wal Division; DA 1008 Mortar Net
   b. Mortar Net USA, Ltd.; Mortar Net.
2. Provide the following configuration:
   a. Strips, full-depth of cavity and 10 inches (250 mm) high, with dovetail shaped notches 7 inches (175 mm) deep that prevent clogging with mortar droppings.

F. Reinforcing Bar Positioners: Wire units designed to fit into mortar bed joints spanning masonry unit cells and hold reinforcing bars in center of cells. Units are formed from 0.148-inch (3.77-mm) steel wire, hot-dip galvanized after fabrication. Provide units designed for number of bars indicated.
1. Products: Subject to compliance with requirements, provide one of the following:
   a. Dayton Superior Corporation, Dur-O-Wal Division; D/A 810, D/A 812 or D/A 817.
   b. Heckmann Building Products Inc.; No. 376 Rebar Positioner.
   c. Hohmann & Barnard, Inc.; #RB or #RB-Twin Rebar Positioner.
   d. Wire-Bond; O-Ring or Double O-Ring Rebar Positioner.

2.10 MORTAR AND GROUT MIXES

A. General: Do not use admixtures, including pigments, air-entraining agents, accelerators, retarders, water-repellent agents, antifreeze compounds, or other admixtures, unless otherwise indicated.
1. Do not use calcium chloride in mortar or grout.
2. Use portland cement-lime, masonry cement or mortar cement mortar unless otherwise indicated.
3. For exterior masonry, use portland cement-lime, masonry cement or mortar cement mortar.
4. For reinforced masonry, use portland cement-lime, masonry cement or mortar cement mortar.
5. Add cold-weather admixture (if used) at same rate for all mortar that will be exposed to view, regardless of weather conditions, to ensure that mortar color is consistent.

B. Preblended, Dry Mortar Mix: Furnish dry mortar ingredients in form of a preblended mix. Measure quantities by weight to ensure accurate proportions, and thoroughly blend ingredients before delivering to Project site.

C. Mortar for Unit Masonry: Comply with ASTM C 270, and BIA Technical Note 8A Property Specification. Provide the following types of mortar for applications stated unless another type is indicated or needed to provide required compressive strength of masonry.
1. For masonry below grade or in contact with earth, use Type S.
2. For reinforced masonry, use Type S.
3. For exterior, above-grade, non-load-bearing walls and parapet walls; for interior load-bearing walls; for interior non-load-bearing partitions; and for other applications where another type is not indicated, use Type N.
4. For exterior, above-grade, load-bearing walls, use Type S.

D. Pigmented Mortar: Use colored cement product or select and proportion pigments with other ingredients to produce color required. Do not add pigments to colored cement products.
1. Pigments shall not exceed 10 percent of portland cement by weight.
2. Pigments shall not exceed 5 percent of masonry cement or mortar cement by weight.

E. Colored-Aggregate Mortar: Produce required mortar color by using colored aggregates and natural color or white cement as necessary to produce required mortar color.

F. Grout for Unit Masonry: Comply with ASTM C 476.
1. Use grout of type indicated or, if not otherwise indicated, of type (fine or coarse) that will comply with Table 1.15.1 in ACI 530.1/ASCE 6/TMS 602 for dimensions of grout spaces and pour height.
2. Proportion grout in accordance with ASTM C 476, paragraph 4.2.2 for specified 28-day compressive strength indicated, but not less than 2500 psi (17.5 MPa).
3. Provide grout with a slump of 8 to 11 inches (203 to 279 mm) as measured according to ASTM C 143/C 143M.

PART 3 - EXECUTION

3.1 EXAMINATION

A. Examine conditions, with Installer present, for compliance with requirements for installation tolerances and other conditions affecting performance of the Work.
1. For the record, prepare written report, endorsed by Installer, listing conditions detrimental to performance of work.
2. Verify that foundations are within tolerances specified.
3. Verify that reinforcing dowels are properly placed.

B. Before installation, examine rough-in and built-in construction for piping systems to verify actual locations of piping connections.

C. Proceed with installation only after unsatisfactory conditions have been corrected.

3.2 INSTALLATION, GENERAL

A. Thickness: Build cavity and composite walls and other masonry construction to full thickness shown. Build single-wythe walls to actual widths of masonry units, using units of widths indicated.

B. Build chases and recesses to accommodate items specified in this and other Sections.

C. Leave openings for equipment to be installed before completing masonry. After installing equipment, complete masonry to match the construction immediately adjacent to opening.

D. Use full-size units without cutting if possible. If cutting is required to provide a continuous pattern or to fit adjoining construction, cut units with motor-driven saws; provide clean, sharp, unchipped edges. Allow units to dry before laying unless wetting of units is specified. Install cut units with cut surfaces and, where possible, cut edges concealed.

E. Select and arrange units for exposed unit masonry to produce a uniform blend of colors and textures.
1. Mix units from several pallets or cubes as they are placed.

F. Matching Existing Masonry: Match coursing, and bonding, of existing masonry.

G. Wetting of Brick: Wet brick before laying if initial rate of absorption exceeds 30 g/30 sq. in. (30 g/194 sq. cm) per minute when tested per ASTM C 67. Allow units to absorb water so they are damp but not wet at time of laying.

3.3 TOLERANCES

A. Dimensions and Locations of Elements:
1. For dimensions in cross section or elevation do not vary by more than plus 1/2 inch (12 mm) or minus 1/4 inch (6 mm).
2. For location of elements in plan do not vary from that indicated by more than plus or minus 1/2 inch (12 mm).
3. For location of elements in elevation do not vary from that indicated by more than plus or minus 1/4 inch (6 mm) in a story height or 1/2 inch (12 mm) total.

B. Lines and Levels:
1. For bed joints and top surfaces of bearing walls do not vary from level by more than 1/4 inch in 10 feet (6 mm in 3 m), or 1/2 inch (12 mm) maximum.
2. For conspicuous horizontal lines, such as lintels, sills, parapets, and reveals, do not vary from level by more than 1/8 inch in 10 feet (3 mm in 3 m), 1/4 inch in 20 feet (6 mm in 6 m), or 1/2 inch (12 mm) maximum.
3. For vertical lines and surfaces do not vary from plumb by more than 1/4 inch in 10 feet (6 mm in 3 m), 3/8 inch in 20 feet (9 mm in 6 m), or 1/2 inch (12 mm) maximum.
4. For conspicuous vertical lines, such as external corners, door jambs, reveals, and expansion and control joints, do not vary from plumb by more than 1/8 inch in 10 feet (3 mm in 3 m), 1/4 inch in 20 feet (6 mm in 6 m), or 1/2 inch (12 mm) maximum.
5. For lines and surfaces do not vary from straight by more than 1/4 inch in 10 feet (6 mm in 3 m), 3/8 inch in 20 feet (9 mm in 6 m), or 1/2 inch (12 mm) maximum.
6. For vertical alignment of exposed head joints, do not vary from plumb by more than 1/4 inch in 10 feet (6 mm in 3 m), or 1/2 inch (12 mm) maximum.

C. Joints:
1. For bed joints, do not vary from thickness indicated by more than plus or minus 1/8 inch (3 mm), with a maximum thickness limited to 1/2 inch (12 mm).
2. For exposed bed joints, do not vary from bed-joint thickness of adjacent courses by more than 1/8 inch (3 mm).
3. For head and collar joints, do not vary from thickness indicated by more than plus 3/8 inch (9 mm) or minus 1/4 inch (6 mm).
4. For exposed head joints, do not vary from thickness indicated by more than plus or minus 1/8 inch (3 mm). Do not vary from adjacent bed-joint and head-joint thicknesses by more than 1/8 inch (3 mm).
5. For exposed bed joints and head joints of stacked bond, do not vary from a straight line by more than 1/16 inch (1.5 mm) from one masonry unit to the next.

3.4 LAYING MASONRY WALLS

A. Lay out walls in advance for accurate spacing of surface bond patterns with uniform joint thicknesses and for accurate location of openings, movement-type joints, returns, and offsets. Avoid using less-than-half-size units, particularly at corners, jambs, and, where possible, at other locations.

B. Bond Pattern for Exposed Masonry: Unless otherwise indicated, lay exposed masonry in running bond; do not use units with less than nominal 4-inch (100-mm) horizontal face dimensions at corners or jambs.

C. Lay concealed masonry with all units in a wythe in running bond or bonded by lapping not less than 4-inches (100-mm). Bond and interlock each course of each wythe at corners. Do not use units with less than nominal 4-inch (100-mm) horizontal face dimensions at corners or jambs.

D. Stopping and Resuming Work: Stop work by racking back units in each course from those in course below; do not tooth. When resuming work, clean masonry surfaces that are to receive mortar, remove loose masonry units and mortar, and wet brick if required before laying fresh masonry.

E. Built-in Work: As construction progresses, build in items specified in this and other Sections. Fill in solidly with masonry around built-in items.

F. Fill space between steel frames and masonry solidly with mortar unless otherwise indicated.

G. Where built-in items are to be embedded in cores of hollow masonry units, place a layer of metal lath, wire mesh, or plastic mesh in the joint below and rod mortar or grout into core.

H. Fill cores in hollow CMUs with grout 24 inches (600 mm) under bearing plates, beams, lintels, posts, and similar items unless otherwise indicated.

I. Build non-load-bearing interior partitions full height of story to underside of solid floor or roof structure above unless otherwise indicated.

3.5 MORTAR BEDDING AND JOINTING

A. Lay hollow CMUs as follows:
1. With face shells fully bedded in mortar and with head joints of depth equal to bed joints.
2. With webs fully bedded in mortar in all courses of piers, columns, and pilasters.
3. With webs fully bedded in mortar in grouted masonry, including starting course on footings.
4. With entire units, including areas under cells, fully bedded in mortar at starting course on footings where cells are not grouted.

B. Lay solid masonry units with completely filled bed and head joints; butter ends with sufficient mortar to fill head joints and shove into place. Do not deeply furrow bed joints or slush head joints.

C. Tool exposed joints slightly concave when thumbprint hard, using a jointer larger than joint thickness unless otherwise indicated.

D. Cut joints flush for masonry walls to receive plaster or other direct-applied finishes (other than paint) unless otherwise indicated.

3.6 CAVITY WALLS

A. Bond wythes of cavity walls together using the following methods:
1. Individual Metal Ties: Provide ties as shown installed in horizontal joints, but not less than one metal tie for 1.77 sq. ft. (0.16 sq. m) of wall area spaced not to exceed 16 inches (406 mm) o.c. horizontally and 16 inches (406 mm) o.c. vertically. Stagger ties in alternate courses. Provide additional ties within 12 inches (305 mm) of openings and space not more than 36 inches (915 mm) apart around perimeter of openings. At intersecting and abutting walls, provide ties at no more than 24 inches (610 mm) o.c. vertically.
2. Masonry Veneer Anchors: Comply with requirements for anchoring masonry veneers.

B. Keep cavities clean of mortar droppings and other materials during construction. Bevel beds away from cavity, to minimize mortar protrusions into cavity. Do not attempt to trowel or remove mortar fins protruding into cavity.

3.7 MASONRY JOINT REINFORCEMENT

A. General: Install entire length of longitudinal side rods in mortar with a minimum cover of 5/8 inch (16 mm) on exterior side of walls, 1/2 inch (13 mm) elsewhere. Lap reinforcement a minimum of 6 inches (150 mm).
1. Space reinforcement not more than 16 inches (406 mm) o.c., unless noted otherwise.
2. Space reinforcement not more than 8 inches (203 mm) o.c. in foundation walls and parapet walls., unless noted otherwise.
3. Provide reinforcement not more than 8 inches (203 mm) above and below wall openings and extending 12 inches (305 mm) beyond openings in addition to continuous reinforcement., unless noted otherwise.

B. Interrupt joint reinforcement at control and expansion joints unless otherwise indicated.

C. Provide continuity at wall intersections by using prefabricated T-shaped units.

D. Provide continuity at corners by using prefabricated L-shaped units.

E. Cut and bend reinforcing units as directed by manufacturer for continuity at corners, returns, offsets, column fireproofing, pipe enclosures, and other special conditions.

3.8 ANCHORING MASONRY VENEERS

A. Anchor masonry veneers to wall framing with adjustable masonry-veneer anchors to comply with the following requirements:
1. Fasten screw-attached anchors through sheathing to wall framing with metal fasteners of type indicated. Use two fasteners unless anchor design only uses one fastener.
2. Insert slip-in anchors in metal studs as sheathing is installed. Provide one anchor at each stud in each horizontal joint between sheathing boards.
3. Embed tie sections in masonry joints. Provide not less than 1 and 1/2 inches (50 mm) of air space between back of masonry veneer and face of sheathing.
4. Locate anchor sections to allow maximum vertical differential movement of ties up and down.
5. Space anchors as indicated, but not more than 16 inches (406 mm) o.c. vertically and 24 inches (610 mm) o.c. horizontally with not less than 1 anchor for each 2.67 sq. ft. (0.25 sq. m) of wall area. Install additional anchors within 12 inches (305 mm) of openings and at intervals, not exceeding 36 inches (914 mm), around perimeter.

3.9 CONTROL AND EXPANSION JOINTS

A. General: Install control and expansion joint materials in unit masonry as masonry progresses. Do not allow materials to span control and expansion joints without provision to allow for in-plane wall or partition movement.

B. Form control joints in concrete masonry as follows:
1. Install interlocking units designed for control joints. Install bond-breaker strips at joint. Keep head joints free and clear of mortar or rake out joint for application of sealant.

C. Form expansion joints in brick as follows:
1. Form open joint full depth of brick wythe and of width indicated, but not less than 1/2 inch (13 mm) for installation of sealant and backer rod specified in Division 07 Section "Joint Sealants."

D. Provide horizontal, pressure-relieving joints by either leaving an air space or inserting a compressible filler of width required for installing sealant and backer rod specified in Division 07 Section "Joint Sealants," but not less than 3/8 inch (10 mm).
1. Locate horizontal, pressure-relieving joints beneath shelf angles supporting masonry.

3.10 (Not Used)

3.11 FLASHING, WEEP HOLES, CAVITY DRAINAGE, AND VENTS

A. General: Install embedded flashing and weep holes in masonry at shelf angles, lintels, ledges, other obstructions to downward flow of water in wall, and where indicated. Install vents at shelf angles, ledges, and other obstructions to upward flow of air in cavities, and where indicated.

B. Install flashing as follows unless otherwise indicated:
1. Prepare masonry surfaces so they are smooth and free from projections that could puncture flashing. Where flashing is within mortar joint, place through-wall flashing on sloping bed of mortar and cover with mortar. Before covering with mortar, seal penetrations in flashing with adhesive, sealant, or tape as recommended by flashing manufacturer.
2. At cavity walls, extend flashing through outer wythe across air space and up face of interior wythe as indicated; terminate with termination bar. Attach termination bar as recommended by manufacturer and provide joint sealant along top edge.
3. At lintels and shelf angles, extend flashing into masonry at each end as indicated. At heads and sills, extend flashing at ends and turn up to form end dams as indicated.
4. Install metal drip edges by interlocking hemmed edges to form hooked seam. Seal seam with elastomeric sealant complying with requirements in Division 07 Section "Joint Sealants" for application indicated.
5. Install metal drip edges and embedded counterflashings beneath flexible flashing at exterior face of wall. Stop flexible flashing 1/2 inch (13 mm) back from outside face of wall and adhere flexible flashing to top.

C. Install reglets and nailers for flashing and other related construction where they are shown to be built into masonry.

D. Install weep holes in head joints in exterior wythes of first course of masonry immediately above embedded flashing and as follows:
1. Use specified weep/vent products to form weep holes.
2. Space weep holes 24 inches (600 mm) o.c. unless otherwise indicated.

E. Place cavity drainage material in cavities to comply with configuration requirements for cavity drainage material in "Miscellaneous Masonry Accessories" Article.

F. Install vents in head joints in exterior wythes at spacing indicated. Use specified weep/vent products to form vents.

3.12 REINFORCED UNIT MASONRY INSTALLATION

A. Temporary Formwork and Shores: Construct formwork and shores as needed to support reinforced masonry elements during construction.
1. Construct formwork to provide shape, line, and dimensions of completed masonry as indicated. Make forms sufficiently tight to prevent leakage of mortar and grout. Brace, tie, and support forms to maintain position and shape during construction and curing of reinforced masonry.
2. Do not remove forms and shores until reinforced masonry members have hardened sufficiently to carry their own weight and other loads that may be placed on them during construction.

B. Placing Reinforcement: Comply with requirements in ACI 530.1/ASCE 6/TMS 602.

(CONTINUED NEXT SHEET)

BRIDGE POINTE RETAIL CENTER IMPROVEMENTS

NEYER PROPERTIES

6400 - 6550 Riverside Drive
Dublin, Ohio 43017

COMMISSION NUMBER: 1205

TRIAD ARCHITECTS
936 Eastwind Drive, Suite 202
Columbus, Ohio 43081
Phone: (614) 942-1050
Fax: (614) 942-1059
main@triadarchitects.com

DATE: 9/25/2012 - PERMIT SET

SEAL: STATE OF OHIO BRENT T. FOLEY 14892 REGISTERED ARCHITECT

BRENT T. FOLEY, LIC. 14892
EXP: DEC 31, 2012

SPECIFICATIONS

DRAWN BY: AML
CHECKED BY: BTF/ZP

A0.4

P:\Pro-12\1205-Equity Bridge Pointe\100-Cad\20 Current Drawings\1205-Bridge Pointe-Sheet Specifications.dwg, 9/25/2012 10:28:11 AM

(042000 UNIT MASONRY - CONTINUED FROM PREVIOUS SHEET)

C. Grouting: Do not place grout until entire height of masonry to be grouted has attained enough strength to resist grout pressure.

1. Comply with requirements in ACI 530.1/ASCE 6/TMS 602 for cleanouts and for grout placement, including minimum grout space and maximum pour height.

2. Limit height of vertical grout pours to not more than 60 inches (1520 mm).

3.13 FIELD QUALITY CONTROL

A. Testing and Inspecting: Engage special inspectors to perform tests and inspections and prepare reports. Allow inspectors access to scaffolding and work areas, as needed to perform tests and inspections. Retesting of materials that fail to comply with specified requirements shall be done at Contractor's expense.

B. Inspections: Level 1 special inspections according to the "International Building Code."

1. Begin masonry construction only after inspectors have verified proportions of site-prepared mortar.

2. Place grout only after inspectors have verified compliance of grout spaces and of grades, sizes, and locations of reinforcement.

3. Place grout only after inspectors have verified proportions of site-prepared grout.

C. Testing Prior to Construction: One set of tests.

D. Testing Frequency: One set of tests for each 5000 sq. ft. (464 sq. m) of wall area or portion thereof.

E. Clay Masonry Unit Test: For each type of unit provided, according to ASTM C 67 for compressive strength.

F. Concrete Masonry Unit Test: For each type of unit provided, according to ASTM C 140 for compressive strength.

G. Mortar Aggregate Ratio Test (Proportion Specification): For each mix provided, according to ASTM C 780.

H. Mortar Test (Property Specification): For each mix provided, according to ASTM C 780. Test mortar for mortar air content and compressive strength.

I. Grout Test (Compressive Strength): For each mix provided, according to ASTM C 1019.

J. Water Testing:

1. Water test all cavities to verify all water is draining to the exterior through the weeps before continuing with exterior wythe and before capping wall.

2. Perform test in presence of testing agent.

3. Do not proceed more than the three courses above flashing without testing and observation, by testing agent.

4. Hold water hose with standard water pressure, forcing water into the cavity so water can be observed coming out adjacent weeps for a period of at least 5 minutes. Continue down the wall to the next weep and continue until the entire length of flashing is tested.

5. Where water is observed inside the building or outside the building away from the weeps, masonry units shall be removed and flashing re-inspected and repaired.

6. Retest repaired areas after repairs have been completed.

7. Testing agent to prepare reports, interpreting and documenting test results.

3.14 REPAIRING, POINTING, AND CLEANING

A. Remove and replace masonry units that are loose, chipped, broken, stained, or otherwise damaged or that do not match adjoining units. Install new units to match adjoining units; install in fresh mortar, pointed to eliminate evidence of replacement.

B. Pointing: During the tooling of joints, enlarge voids and holes, except weep holes, and completely fill with mortar. Point up joints, including corners, openings, and adjacent construction, to provide a neat, uniform appearance. Prepare joints for sealant application, where indicated.

C. In-Progress Cleaning: Clean unit masonry as work progresses by dry brushing to remove mortar fins and smears before tooling joints.

D. Final Cleaning: After mortar is thoroughly set and cured, clean exposed masonry as follows:

1. Remove large mortar particles by hand with wooden paddles and nonmetallic scrape hoes or chisels.

2. Clean brick by bucket-and-brush hand-cleaning method described in BIA Technical Notes 20.

3. Clean concrete masonry by cleaning method indicated in NCMA TEK 8-2A applicable to type of stain on exposed surfaces.

3.15 MASONRY WASTE DISPOSAL

A. Salvageable Materials: Unless otherwise indicated, excess masonry materials are Contractor's property. At completion of unit masonry work, remove from Project site.

END OF SECTION 042000

SECTION 042516 - THIN BRICK PANEL SYSTEM

PART 1 - GENERAL

1.1 RELATED DOCUMENTS

A. Drawings and general provisions of the Contract, including General and Supplementary Conditions and Division 01 Specification Sections, apply to this Section.

1.2 SUMMARY

A. Section Includes:

1. Thin brick.

2. Thin stone.

3. Mortar and grout.

4. Fasteners.

5. Embedded flashing.

6. Weepholes/Vents.

7. Cleaning.

8. Miscellaneous masonry accessories.

1.3 QUALITY ASSURANCE

A. Source Limitations for Masonry Units: Obtain exposed masonry units of a uniform texture and color, or a uniform blend within the ranges accepted for these characteristics, from single source from single manufacturer for each product required.

B. Source Limitations for Mortar Materials: Obtain mortar ingredients of a uniform quality, including color for exposed masonry, from single manufacturer for each cementitious component and from single source or producer for each aggregate.

C. Masonry Standard: Comply with ACI 530.1/ASCE 6/TMS 602 unless modified by requirements in the Contract Documents.

D. Sample Panels: Build sample panels to verify selections made under sample submittals and to demonstrate aesthetic effects.

1. Build sample panel for walls to receive thin-brick panel system as shown on drawings.

a. Use panel as standard of comparison for all masonry work built of same material.

b. Where thin brick masonry is to match unit masonry, erect panel adjacent and parallel to unit masonry surface.

c. Clean one-half of exposed faces of panels with masonry cleaner indicated.

d. Protect approved sample panels from the elements with weather-resistant membrane.

e. Approval of sample panels is for color, texture, and blending of masonry units; relationship of mortar and sealant colors to masonry unit colors; tooling of joints; aesthetic qualities of workmanship; and other material and construction qualities.

f. Do not start work until Owner has accepted sample panel.

g. Do not destroy or move panel until work is completed and accepted by Owner.

1.4 DELIVERY, STORAGE, AND HANDLING

A. Store materials on elevated platforms in a dry location. If materials are not stored in an enclosed location, cover tops and sides of stacks with waterproof sheeting, securely tied. If materials become wet, do not install until they are dry.

B. Deliver materials in manufacturer's unopened containers, identified with name, brand, type, and grade.

C. Store products in manufacturer's unopened packaging until ready for installation.

D. Store thin-brick panels and accessories off the ground to prevent contamination by mud, dust or other materials likely to cause staining or other defects.

E. Deliver preblended, dry mortar mix in moisture-resistant containers designed for use with dispensing silos. Store preblended, dry mortar mix in delivery containers on elevated platforms, under cover, and in a dry location or in covered weatherproof dispensing silos.

F. Mastic and mortar additive are to be stored above 32° Fahrenheit and below 86° Fahrenheit temperatures.

G. Store masonry accessories, including metal items, to prevent corrosion and accumulation of dirt and oil.

H. Store and dispose of solvent-based materials, and materials used with solvent-based materials, in accordance with requirements of local authorities having jurisdiction.

1.5 PROJECT CONDITIONS

A. Comply with requirements of referenced standards and recommendations of material manufacturers for environmental conditions before, during, and after installation.

B. Protection of Work:

1. Maintain environmental conditions (temperature, humidity, and ventilation) within limits recommended by manufacturer for optimum results. Do not install products under environmental conditions outside manufacturer's absolute limits.

C. Stain Prevention:

1. Prevent mortar and adhesive from staining the face of masonry to be left exposed or painted.

2. Immediately remove mortar that comes in contact with masonry.

3. To avoid smearing of adhesive on the face of masonry, allow adhesive on face of installed masonry to set before trying to remove.

4. Protect all sills, ledges and projections from droppings of adhesive or mortar.

5. Protect the wall from rain-splashed mud and mortar splatter.

6. Protect surfaces of window and door frames, as well as similar products with painted and integral finishes, from mortar droppings.

7. Turn scaffold boards closest to the wall on edge when work is not in progress to prevent rain from splashing mortar and dirt onto masonry.

D. Cold-Weather Requirements:

1. Do not use frozen materials or materials mixed or coated with ice or frost.

2. Do not build on frozen substrates.

3. Remove and replace unit masonry damaged by frost or by freezing conditions.

4. Comply with cold-weather construction requirements contained in TMS 602/ACI 530.1/ASCE 6.

5. Comply with adhesive manufacturer's application and temperature requirements

E. Hot-Weather Requirements:

1. Comply with hot-weather construction requirements contained in ACI 530.1/ASCE 6/TMS 602.

2. Protect mortar from uneven and excessive evaporation.

a. The face of the installed thin brick may be dampened with water prior mortar installation to reduce the absorption of moisture from the mortar joint and increase bond.

b. Veneer may be fogged with water to allow the mortar enough time to set. Apply only enough moisture to consistently dampen the wall without allowing water to run down the face.

3. Comply with adhesive manufacturer's application and temperature requirements.

PART 2 - PRODUCTS

2.1 METAL MASONRY SUPPORT PANELS, GENERAL

A. Metal Masonry Support Panel intended for the interior or exterior structural mechanical support of thin veneer on concrete, masonry, metal or frame construction. Structural grade 33 (.018) steel with G90 galvanized thermal set coating and stucco embossed texture with angled support ties.

2.2 METAL MASONRY SUPPORT PANELS

A. Basis-of-Design Product:

1. All Metal Panels for Thin Brick Support specified and shown on drawings shall be “Elite Thin Tech™ Panel” as manufactured by the Glen-Gery Corporation.

2. Flat Panels: 16-square foot (1.44 m2) masonry support panels for flat wall areas 48-inch (1,219.2 mm) x 48-inch (1,219.2 mm) nominal (see below), shall have support spacing as follows (actual dimensions listed):

a. 2-5/8 inch (66.675 mm) for Modular, standard, Norman, and other 2-1/4" (57.2mm) high units. Elite panel size: 48" (1,219.2 mm) x 47-1/4" (1,200.15 mm).

2.3 MASONRY UNITS

A. Defective Units: Referenced masonry unit standards may allow a certain percentage of units to contain chips, cracks, or other defects exceeding limits stated in the standard. Do not use units where such defects will be exposed in the completed work.

B. General: Provide shapes indicated and as follows, with exposed surfaces matching finish and color of exposed faces of adjacent units.

1. Provide special shapes for applications where flats (stretcher units) cannot accommodate special conditions, including those at corners, movement joints, bond beams, sashes, sheff angles and lintels. Mitered units shall not be used at standard corners.

2. Provide special shapes for applications requiring brick of size, form, color, and texture on exposed surfaces that cannot be produced by sawing.

3. Provide special shapes for applications where shapes produced by sawing would result in sawed surfaces being exposed to view.

C. Thin Brick:

1. Products: Subject to compliance with requirements, provide the following:

a. Glen-Gery Corporation; Thin Brick.

b. Color: As indicated on Exterior Finish Schedule.

2. Grade: ASTM C 1088, Grade Exterior

3. Type: TBS.

4. Size (height, length - actual dimensions):

a. Modular Size: 2-1/4 inches (57.2 mm) high by 7-5/8 inches (193.7 mm) long.

5. Thickness: ½ inch (13mm).

6. Application: Use where brick is exposed unless otherwise indicated.

D. Thin Stone:

1. Products: Subject to compliance with requirements, provide the following:

a. Glen-Gery Corporation; Thin Tech Cast Stone

2. Color: As indicated on Exterior Finish Schedule.

2.4 MORTAR

A. Mortar for thin brick:

1. Mortar shall conform to ASTM C 270 Standard Specification for Mortar for Unit Masonry under the guidelines provided in BIA Technical Notes #8 Series.

a. Type: N

2. Color: As indicated on Exterior Finish Schedule.

B. Mortar for thin stone units:

1. Comply with masonry unit manufacturer's mortar requirements. Mortar shall conform to ASTM C 270 Standard Specification for Mortar for Unit Masonry.

2. Color: As indicated on Exterior Finish Schedule.

C. Cold Weather Additives (including accelerators) shall not be used in thin brick mortar mix.

2.5 EMBEDDED FLASHING MATERIALS

A. Metal Flashing:

1. Glen-Gery Thin Tech™ Starter Angle pre-bent in 10 ft. (304.8 cm) lengths:

a. Galvanized sheet steel: ASTM A653 0.024 inch (0.61) (26 gauge), minimum ASTM A925 G-60 coating.

b. Stainless Steel: ASTM A 240/A 240M, Type 304, 0.019 inch (0.45mm) (24 gauge).

2.6 WEEPHOLES/VENTS

A. Glen-Gery Thin Tech™ air vent: Impact resistant polypropylene copolymer, Density 2000 grams/sq meter.

B. Size: 3/8- in. (10mm) x 1/2 in. (13 mm) x 4 ft. (122 cm).

2.7 FASTENERS

A. Provide corrosion resistant fasteners for support tie ledge panel in accordance with manufacturer's instructions, and compatible with substrate construction.

1. Screw fasteners shall be a minimum #6, minimum 0.138 inch (3.5 mm) shank diameter or #8, minimum 0.164 inch (4.2 mm) shank diameter with a wafer, pancake or bugle head and corrosion resistance provided by zinc plating or stainless steel with a minimum protection of 800 hrs when tested according to ASTM B 117.

2. Fasteners Length:

a. Steel studs, girts or purlins: Self tapping/self drilling fasteners shall penetrate a minimum 1/4" (6.4 mm), or not less than three exposed threads behind the stud flange, girt or purlin.

2.8 ADHESIVE

A. Adhesive for thin clay brick or thin stone:

1. High-strength mastics must exceed ASTM D3498 and ASTM C557 specifications with less than 70 grams of VOC per liter with a shear value between the thin veneer and the panel greater than 100 PSI (10.5 kg/cm2).

2.9 SHEATHING

A. Sheathing shall be one of the following as deemed suitable for specific project conditions:

1. Exterior grade gypsum sheathing or glass fiber mat-faced sheathing or cement board, not less than 1/2-inch (12.7 mm) in thickness.

2.10 WEATHER BARRIER

A. Provide weather barriers as recommended by manufacturer.

B. Weather barriers shall provide a minimum protection equal to No.15 asphalt felt, complying with ASTM D 226 for Type 1 felt or other approved materials.

2.11 MASONRY CLEANERS

A. Proprietary Acidic Cleaner: Manufacturer's standard-strength cleaner designed for removing mortar/grout stains, efflorescence, and other new construction stains from new masonry without discoloring or damaging masonry surfaces. Use product expressly approved for intended use by cleaner manufacturer and manufacturer of masonry units being cleaned.

1. Manufacturers: Subject to compliance with requirements, available manufacturers offering products that may be incorporated into the Work include, but are not limited to, the following:

a. Diedrich Technologies, Inc.

b. EaCo Chem, Inc.

c. ProSoCo, Inc.

2. Verify with thin brick manufacturer cleaning solution and procedures are compatible with thin brick and mortar specified.

PART 3 - EXECUTION

3.1 EXAMINATION

A. Examine conditions, with Installer present, for compliance with requirements for installation tolerances and other conditions affecting performance of the Work.

B. Do not begin installation until substrates and foundations as well as rough-in and built-in construction have been properly prepared.

1. Walls must be structurally sound and the substrate system designed with a wall deflection not greater than L/360.

a. Maximum wall frame spacing for stud walls = 609.6 mm (24") O.C.

b. Maximum wall frame spacing for girts = 762 mm (30") O.C.

c. Minimum 0.043 inch (18-gauge; 1.09 mm) studs for exterior walls.

C. Verify substrate including, concrete, masonry or framing as well as sheathings and weather barrier are properly installed.

D. Verify walls are plumb and corners are braced to specifications.

E. Substrate must be flat, within 1/8- inch (3.2 mm) within any 4-foot (1.2 m) square area with no planar irregularities greater than 1/4" per 10 linear feet.

F. Proceed with installation only after unsatisfactory conditions have been corrected.

3.2 PREPARATION

A. Clean surfaces thoroughly prior to installation. All surfaces must be free of water, snow, dirt, mud, oil and other foreign materials prior to application.

B. Prepare surfaces using the methods recommended by the manufacturer for achieving the best result for the substrate under the project conditions.

C. Trim or flash in place per manufacturer's details and/or BIA Technical Note 7A on flashing of Brick Walls.

3.3 INSTALLATION, GENERAL

A. Install materials in accordance with manufacturer's instructions.

B. Select and arrange exposed masonry units to produce a uniform blend of color and texture.

1. Mix units from several pallets or cubes as they are placed.

C. Comply with tolerances in TMS 602/ACI 530.1/ASCE 6.

3.4 SUPPORT TIE LEDGE PANEL

A. Install in accordance with manufacturer's written instructions as applicable to each type of substrate required.

B. Trim, starter angle and flashing shall be installed prior to panel installation.

C. Walls shall be constructed of structurally sound masonry, wood, or steel studs, with an approved building sheathing and weather resistant barriers as required.

D. Panels shall be clean, free of dirt, oil or any other foreign contaminant.

E. Lay out panels in advance for accurate spacing of tabs to allow installation of full height masonry units at top and bottom of walls, openings, etc. when possible.

F. Attach panels flat to the substrate in true and level rows with support ties aligned and level to each other at flat sections as well as corners.

G. Stagger metal panel joints over sheathing joints.

H. Do not allow panels to bridge movement joints in substrate.

I. Install full-size uncut panels when possible. When cutting is required to provide staggered panel joints or to fit specific application, cut panels to provide clean, unbent edges.

J. Install panels to ensure a 1/16" - 1/8" gap between the sides of the panels and butt panels vertically, always leaving a gap at movement joints locations equal to the thickness of the joint.

K. Stop panel 1/4" to 3/8" from inside corners, openings and other materials to allow for movement.

L. Fastener Installation: Mechanically attach metal panels with a minimum of one fastener per square foot (900 cm2) increasing spacing along the top and bottom of the wall and around openings. Attach fasteners to the framing through the sheathing.

1. Horizontal fastener spacing shall not exceed 24 inches; vertical fastener spacing shall not exceed 16 inches.

2. Provide additional anchors around the perimeter of walls as well as openings larger than 24 inches (406 mm) in either dimension, as well as building corners not utilizing corner panels as follows:

a. Install fasteners a minimum of 3 per square foot (900 cm2).

1) At the top and bottom of the walls, fasteners shall be spaced a maximum of 12 inches (305 mm) horizontally and within the height of a single row or course of masonry.

2) At vertical wall ends of wall and openings, fasteners shall be spaced a maximum of 8 inches vertically within 4 inches of the end of the panel.

3.5 THIN VENEERS

A. Lay out walls in advance for accurate spacing of surface bond patterns with uniform joint thicknesses and for accurate location of openings, movement-type joints, returns, and offsets.

1. Avoid using less-than-half-size units, particularly at corners, jambs, and, where possible, at other locations.

2. Ensure unfinished or cut faces are not exposed to view upon completion.

B. Select and arrange units for exposed unit masonry to produce a uniform blend of color and texture.

C. Bond Pattern: Unless otherwise indicated, lay masonry in running bond unless otherwise indicated.

D. Back face of thin brick must be dry and clean; free of dirt, oil or any other foreign contaminant.

E. Leave a uniform 3/8 - 1/2-inch (9.5 - 12.7 mm) gap at openings to allow for movement joint installation.

F. Adhere individual units to panel using specified adhesive placed on the back of the units in two 1/2 - 3/4-inch dabs or vertical strips 3/8-inch wide. For corner brick apply one dap on head and one dab at each end of the long leg.

1. Do not apply adhesive in a manner that would create horizontal strips of adhesive that may prevent moisture from draining down the wall.

2. Do not use excessive adhesive as this will cause thin brick to tilt away from wall prior to adhesive set.

G. Thin veneers shall be applied within 5 to 10 minutes after adhesive has been applied and before film begins to form on the adhesive.

H. Space thin brick to ensure that the head joints do not exceed 5/8-inch (16 mm) or fall below 1/4-inch (6.4 mm).

I. When adjustment is necessary to be made after adhesive begins to harden, remove hardened adhesive and replace with fresh adhesive.

J. Keep areas intended to receive sealant clean of thin brick, adhesive and other materials during construction.

K. Do not allow masonry units to bridge movement joints in substrate.

3.6 MORTAR INSTALLATION AND JOINTING

A. After adhesive has set a minimum of 12 hours, completely fill head and bed joints between adhered veneer intended to receive mortar.

B. Do not fill joints to receive weep/air vent:

1. Above starter angles.

2. At top of wall.

C. Keep weep holes free of mortar every 24 inches immediately above starter angles and flashings.

D. Tool exposed joints when thumbprint hard to joint profile listed below:

1. Joint Profile: Tool mortar joints to a concave appearance.

E. Flush cut all joints not tooled.

F. When pointing, completely remove mortar, and refill solidly with pointing mortar, and tool joints.

3.7 FLASHING

A. Install embedded flashing and weep holes in thin brick wall panel assemblies at the base of the wall, above openings, above horizontal movement joints and other obstructions to downward flow of water in wall, and where indicated.

B. Before covering with wall panel or mortar, seal penetrations in flashing with adhesive, sealant, or tape as recommended by flashing manufacturer.

C. Carry flashing vertically as detailed, but not less than 3 inches (76 mm) above horizontal plane.

D. Lap flashing a minimum of 3 inches (76 mm).

E. Seal all flashing laps with compatible lap cement.

F. Extend head and sill flashings not less than 6 inches (150 mm) beyond edges of openings; seal with mastic.

G. Project starter angle from face of wall approximately 1/4-inch (6 mm) to form a drip.

3.8 WEEPHOLES/VENTS

A. Install specified air vent where the panel meets the starter angle or flashing, and at top of wall; unless otherwise indicated.

B. Weepholes (in areas where vents are not installed or specified): Install weepholes to drain moisture from the wall by omitting mortar/sealant a maximum of 24 inches (610 mm) on center horizontally for units 12" (305 mm) or less in length and a maximum of 32" (813 mm) on center for larger units, in the joint between the flashing and thin brick above or in the lower third of the head joints immediately above the starter angles and flashings, including the base of the wall, at horizontal expansion joints and above all openings.

C. Keep vents and weepholes free of mortar.

3.9 CONTROL AND EXPANSION JOINTS

A. Locate joints in accordance with manufacturer's instructions.

1. Vertical joints must not exceed 16-feet (488 cm) on center in walls without openings; including joint within 4 ft. (122 cm) of the corner.

B. Keep clean of all mortar, adhesive and debris.

C. Provide vertical and horizontal pressure-relieving joints where indicated by installing sealant, and inserting a compressible filler when required, as specified in Division 07 Section “Joint Sealants,” but not less than 3/8-inch (10 mm). Backer rod may not be required and is dependent upon depth of joint.

D. Install joints between thin brick wall assemblies and other materials including around windows and doors.

E. Install joints at changes in substrate and where movement joints occur in substrate.

3.10 REPAIRING, POINTING, AND CLEANING

A. Remove and replace masonry units that are loose, chipped, broken, stained, or otherwise damaged or that do not match adjoining units. Install new units to match adjoining units; install in fresh adhesive, pointed to eliminate evidence of replacement.

B. In-Progress Cleaning: Clean unit masonry as work progresses by dry brushing to remove adhesive as well as mortar fins and smears before tooling joints.

C. Final Cleaning: After mortar is thoroughly set and cured, clean exposed masonry as follows:

1. Cut out all defective mortar joints and holes in exposed masonry and provide new mortar.

2. Clean thin brick in accordance with manufacturer's written instructions.

3. Protect adjacent stone and nonmasonry surfaces from contact with cleaner by covering them with liquid strippable masking agent or polyethylene film and waterproof masking tape.

4. All cleaning practices and product used shall be in accordance with cleaning products manufacturer's written instructions.

END OF SECTION 042113

SECTION 047200 - CAST STONE MASONRY

PART 1 - GENERAL

1.1 RELATED DOCUMENTS

D. Drawings and general provisions of the Contract, including General and Supplementary Conditions and Specification Sections, apply to this Section.

1.2 SUMMARY

A. Section Includes:

1. Cast stone units and trim including the following:.

a. Coping.

b. Wall caps.

c. Water tables.

B. Related Sections:

2. Division 04 Section "Unit Masonry" for installing cast stone units in unit masonry.

1.3 QUALITY ASSURANCE

A. Manufacturer Qualifications: A qualified manufacturer of cast stone units similar to those indicated for this Project, that has sufficient production capacity to manufacture required units, and is a plant certified by the Cast Stone Institute .

B. Source Limitations for Cast Stone: Obtain cast stone units through single source from single manufacturer.

C. Source Limitations for Mortar Materials: Obtain mortar ingredients of a uniform quality, including color, from one manufacturer for each cementitious component and from one source or producer for each aggregate.

1.4 DELIVERY, STORAGE, AND HANDLING

A. Coordinate delivery of cast stone with unit masonry work to avoid delaying the Work and to minimize the need for on-site storage.

B. Pack, handle, and ship cast stone units in suitable packs or pallets.

1. Lift with wide-belt slings; do not use wire rope or ropes that might cause staining. Move cast stone units, if required, using dollies with wood supports.

2. Store cast stone units on wood skids or pallets with nonstaining, waterproof covers, securely tied. Arrange to distribute weight evenly and to prevent damage to units. Ventilate under covers to prevent condensation.

C. Store cementitious materials on elevated platforms, under cover, and in a dry location. Do not use cementitious materials that have become damp.

D. Store mortar aggregates where grading and other required characteristics can be maintained and contamination can be avoided.

1.5 PROJECT CONDITIONS

A. Cold-Weather Requirements: Do not use frozen materials or materials mixed or coated with ice or frost. Do not build on frozen substrates. Comply with cold-weather construction requirements in ACI 530.1/ASCE 6/TMS 602.

1. Cold-Weather Cleaning: Use liquid cleaning methods only when air temperature is 40 deg F (4 deg C) and above and will remain so until cast stone has dried, but no fewer than seven days after completing cleaning.

B. Hot-Weather Requirements: Comply with hot-weather construction requirements in ACI 530.1/ASCE 6/TMS 602.

PART 2 - PRODUCTS

2.1 CAST STONE MATERIALS

A. General: Comply with ASTM C 1364 and the following:

B. Portland Cement: ASTM C 150, Type I or Type III, containing not more than 0.60 percent total alkali when tested according to ASTM C 114. Provide natural color or white cement as required to produce cast stone color indicated.

C. Coarse Aggregates: Granite, quartz, or limestone complying with ASTM C 33; gradation and colors as needed to produce required cast stone textures and colors.

D. Fine Aggregates: Natural sand or crushed stone complying with ASTM C 33, gradation and colors as needed to produce required cast stone textures and colors.

E. Color Pigment: ASTM C 979, synthetic mineral-oxide pigments or colored water-reducing admixtures; color stable, free of carbon black, nonfading, and resistant to lime and other alkalis.

F. Admixtures: Use only admixtures specified or approved in writing by Architect.

1. Do not use admixtures that contain more than 0.1 percent water-soluble chloride ions by mass of cementitious materials. Do not use admixtures containing calcium chloride.

2. Use only admixtures that are certified by manufacturer to be compatible with cement and other admixtures used.

3. Air-Entraining Admixture: ASTM C 260. Add to mixes for units exposed to the exterior at manufacturer's prescribed rate to result in an air content of 4 to 6 percent, except do not add to zero-slump concrete mixes.

4. Water-Reducing Admixture: ASTM C 494/C 494M, Type A.

5. Water-Reducing, Retarding Admixture: ASTM C 494/C 494M, Type D.

6. Water-Reducing, Accelerating Admixture: ASTM C 494/C 494M, Type E.

G. Reinforcement: Deformed steel bars complying with ASTM A 615/A 615M, Grade 60 (Grade 420). Use galvanized or epoxy-coated reinforcement when covered with less than 1-1/2 inches (38 mm) of cast stone material.

1. Epoxy Coating: ASTM A 775/A 775M.

2. Galvanized Coating: ASTM A 767/A 767M.

H. Embedded Anchors and Other Inserts: Fabricated from stainless steel complying with ASTM A 240/A 240M, ASTM A 276, or ASTM A 666, Type 304.

2.2 CAST STONE UNITS

A. Provide cast stone units complying with ASTM C 1364 using either the vibrant dry tamp or wet-cast method.

1. Provide units that are resistant to freezing and thawing as determined by laboratory testing according to ASTM C 666/C 666M, Procedure A, as modified by ASTM C 1364.

B. Fabricate units with sharp arris and accurately reproduced details, with indicated texture on all exposed surfaces unless otherwise indicated.

1. Slope exposed horizontal surfaces 1:12 to drain unless otherwise indicated.

2. Provide drips on projecting elements unless otherwise indicated.

C. Fabrication Tolerances:

1. Variation in Cross Section: Do not vary from indicated dimensions by more than 1/8 inch (3 mm).

2. Variation in Length: Do not vary from indicated dimensions by more than 1/360 of the length of unit or 1/8 inch (3 mm), whichever is greater, but in no case by more than 1/4 inch (6 mm).

3. Warp, Bow, and Twist: Not to exceed 1/360 of the length of unit or 1/8 inch (3 mm), whichever is greater.

4. Location of Grooves, False Joints, Holes, Anchorages, and Similar Features: Do not vary from indicated position by more than 1/8 inch (3 mm) on formed surfaces of units and 3/8 inch (10 mm) on unformed surfaces.

D. Cure units as follows:

1. Cure units in enclosed moist curing room at 95 to 100 percent relative humidity and temperature of 100 deg F (38 deg C) for 12 hours or 70 deg F (21 deg C) for 16 hours.

2. Keep units damp and continue curing to comply with one of the following:

a. No fewer than five days at mean daily temperature of 70 deg F (21 deg C) or above.

b. No fewer than six days at mean daily temperature of 60 deg F (16 deg C) or above.

c. No fewer than seven days at mean daily temperature of 50 deg F (10 deg C) or above.

d. No fewer than eight days at mean daily temperature of 45 deg F (7 deg C) or above.

E. Acid etch units after curing to remove cement film from surfaces to be exposed to view.

F. Colors and Textures: As indicated.

2.3 MORTAR MATERIALS

A. Provide mortar materials that comply with Division 04 Section "Unit Masonry."

a. Match existing.

2.4 ACCESSORIES

A. Anchors: Type and size indicated, fabricated from Type 304 stainless steel complying with ASTM A 240/A 240M, ASTM A 276, or ASTM A 666.

B. Dowels: 1/2-inch- (12-mm-) diameter, round bars, fabricated from Type 304 stainless steel complying with ASTM A 240/A 240M, ASTM A 276, or ASTM A 666.

2.5 MORTAR MIXES

A. Comply with requirements in Division 04 Section "Unit Masonry" for mortar mixes.

PART 3 - EXECUTION

3.1 EXAMINATION

A. Examine substrates and conditions, with Installer present, for compliance with requirements for installation tolerances and other conditions affecting performance of work.

B. Proceed with installation only after unsatisfactory conditions have been corrected.

3.2 SETTING CAST STONE IN MORTAR

A. Install cast stone units to comply with requirements in Division 04 Section "Unit Masonry."

3.3 SETTING ANCHORED CAST STONE WITH SEALANT-FILLED JOINTS

A. Set cast stone as indicated on Drawings. Set units accurately in locations indicated with edges and faces aligned according to established relationships and indicated tolerances.

1. Install anchors, supports, fasteners, and other attachments indicated or necessary to secure units in place.

2. Shim and adjust anchors, supports, and accessories to set cast stone in locations indicated with uniform joints.

B. Keep cavities open where unfilled space is indicated between back of cast stone units and backup wall; do not fill cavities with mortar or grout.

C. Fill anchor holes with sealant.

1. Where dowel holes occur at pressure-relieving joints, provide compressible material at ends of dowels.

D. Set cast stone supported on clip or continuous angles on resilient setting shims. Use material of thickness required to maintain uniform joint widths. Hold shims back from face of cast stone a distance at least equal to width of joint.

E. Keep joints free of mortar and other rigid materials. Remove temporary shims and spacers from joints after anchors and supports are secured in place and cast stone units are anchored. Do not begin sealant installation until temporary shims and spacers are removed.

1. Form open joint of width indicated, but not less than 3/8 inch (10 mm).

F. Prime cast stone surfaces to receive sealant and install compressible backer rod in joints before applying sealant unless otherwise indicated.

G. Prepare and apply sealant of type and at locations indicated to comply with applicable requirements in Division 07 Section "Joint Sealants."

3.4 INSTALLATION TOLERANCES

A. Variation from Plumb: Do not exceed 1/8 inch in 10 feet (3 mm in 3 m), 1/4 inch in 20 feet (6 mm in 6 m), or 1/2 inch (12 mm) maximum.

B. Variation from Level: Do not exceed 1/8 inch in 10 feet (3 mm in 3 m), 1/4 inch in 20 feet (6 mm in 6 m), or 1/2 inch (12 mm) maximum.

C. Variation in Joint Width: Do not vary joint thickness more than 1/8 inch in 36 inches (3 mm in 900 mm) or one-fourth of nominal joint width, whichever is less.

D. Variation in Plane between Adjacent Surfaces (Lipping): Do not vary from flush alignment with adjacent units or adjacent surfaces indicated to be flush with units by more than 1/16 inch (1.5 mm), except where variation is due to warpage of units within tolerances specified.

3.5 ADJUSTING AND CLEANING

A. Remove and replace stained and otherwise damaged units and units not matching approved Samples. Cast stone may be repaired if methods and results are approved by Architect.

B. Replace units in a manner that results in cast stone matching approved Samples, complying with other requirements, and showing no evidence of replacement.

C. In-Progress Cleaning: comply with requirements in Division 04 Section "Unit Masonry".

D. Final Cleaning: comply with requirements in Division 04 Section "Unit Masonry":

END OF SECTION 047200

SECTION 061000 - ROUGH CARPENTRY

PART 1 - GENERAL

1.1 RELATED DOCUMENTS

A. Drawings and general provisions of the Contract, including General and Supplementary Conditions and Specification Sections, apply to this Section.

1.2 SUMMARY

A. This Section includes the following:

1. Wood blocking and nailers.

1.3 DEFINITIONS

A. Exposed Framing: Framing not concealed by other construction.

B. Dimension Lumber: Lumber of 2 inches nominal (38 mm actual) or greater but less than 5 inches nominal (114 mm actual) in least dimension.

C. Lumber grading agencies, and the abbreviations used to reference them, include the following:

1. NeLMA: Northeastern Lumber Manufacturers' Association.

2. NLGA: National Lumber Grades Authority.

3. RIS: Redwood Inspection Service.

4. SPIB: The Southern Pine Inspection Bureau.

5. WCLIB: West Coast Lumber Inspection Bureau.

6. WWPA: Western Wood Products Association.

1.4 QUALITY ASSURANCE

A. Source Limitations for Engineered Wood Products: Obtain each type of engineered wood product through one source from a single manufacturer.

1.5 DELIVERY, STORAGE, AND HANDLING

A. Stack lumber flat with spacers between each bundle to provide air circulation. Provide for air circulation around stacks and under coverings.

(CONTINUED NEXT SHEET)

BRIDGE POINTE RETAIL CENTER IMPROVEMENTS

NEYER PROPERTIES

6400 - 6550 Riverside Drive
Dublin, Ohio 43017

COMMISSION NUMBER: 1205

TRIAD ARCHITECTS
936 Eastwind Drive, Suite 202
Columbus, Ohio 43081
Phone: (614) 942-1050
Fax: (614) 942-1059
main@triadarchitects.com

DATE:
9/25/2012 - PERMIT SET

SEAL:
STATE OF OHIO
BRENT T. FOLEY
14892
REGISTERED ARCHITECT

BRENT T. FOLEY, LIC. 14892
EXP: DEC 31, 2012

SPECIFICATIONS

DRAWN BY: AML
CHECKED BY: BTF/ZP

A0.5

P:\Pro-12\1205-Equity Bridge Pointe\100-Cad\20 Current Drawings\1205-Bridge Pointe-Sheet Specifications.dwg, 9/25/2012 10:28:14 AM

(061000 - ROUGH CARPENTRY - CONTINUED FROM PREVIOUS SHEET)

PART 2 - PRODUCTS

2.1 WOOD PRODUCTS, GENERAL

A. Lumber: DOC PS 20 and applicable rules of grading agencies indicated. If no grading agency is indicated, provide lumber that complies with the applicable rules of any rules-writing agency certified by the ALSC Board of Review. Provide lumber graded by an agency certified by the ALSC Board of Review to inspect and grade lumber under the rules indicated.
   1. Factory mark each piece of lumber with grade stamp of grading agency.
   2. Where nominal sizes are indicated, provide actual sizes required by DOC PS 20 for moisture content specified. Where actual sizes are indicated, they are minimum dressed sizes for dry lumber.
   3. Provide dressed lumber, S4S, unless otherwise indicated.

2.2 WOOD-PRESERVATIVE-TREATED LUMBER

A. Preservative Treatment by Pressure Process: AWPA C2.
   1. Preservative Chemicals: Acceptable to authorities having jurisdiction and containing no arsenic or chromium.
B. Kiln-dry lumber after treatment to a maximum moisture content of 19 percent. Do not use material that is warped or does not comply with requirements for untreated material.
C. Mark lumber with treatment quality mark of an inspection agency approved by the ALSC Board of Review.
D. Application: Treat all items.

2.3 (Not Used)

2.4 MISCELLANEOUS LUMBER

A. General: Provide miscellaneous lumber indicated and lumber for support or attachment of other construction, including the following:
   1. Blocking.
   2. Nailers.
B. For items of dimension lumber size, provide Construction or No. 2grade lumber with 19 percent maximum moisture content of any species.
C. For concealed boards, provide lumber with 19 percent maximum moisture content and any of the following species and grades:
   1. Mixed southern pine, No. 2 grade; SPIB.
   2. Hem-fir or hem-fir (north), Construction or 2 Common grade; NLGA, WCLIB, or WWPA.
   3. Spruce-pine-fir (south) or spruce-pine-fir, Construction or 2 Common grade; NeLMA, NLGA, WCLIB, or WWPA.
D. For blocking not used for attachment of other construction, Utility, Stud, or No. 3 grade lumber of any species may be used provided that it is cut and selected to eliminate defects that will interfere with its attachment and purpose.
E. For blocking and nailers used for attachment of other construction, select and cut lumber to eliminate knots and other defects that will interfere with attachment of other work.

2.5 (Not Used)

2.6 FASTENERS

A. General: Provide fasteners of size and type indicated that comply with requirements specified in this Article for material and manufacture.
   1. Where rough carpentry is exposed to weather, in ground contact, pressure-preservative treated, or in area of high relative humidity, provide fasteners of Type 304 stainless steel.
B. Nails, Brads, and Staples: ASTM F 1667.
C. Power-Driven Fasteners: NES NER-272.
D. Wood Screws: ASME B18.6.1.
E. Lag Bolts: ASME B18.2.1 (ASME B18.2.3.8M).
F. Bolts: Steel bolts complying with ASTM A 307, Grade A (ASTM F 568M, Property Class 4.6); with ASTM A 563 (ASTM A 563M) hex nuts and, where indicated, flat washers.
G. Expansion Anchors: Anchor bolt and sleeve assembly of material indicated below with capability to sustain, without failure, a load equal to 6 times the load imposed when installed in unit masonry assemblies and equal to 4 times the load imposed when installed in concrete as determined by testing per ASTM E 488 conducted by a qualified independent testing and inspecting agency.
   1. Material: Stainless steel with bolts and nuts complying with ASTM F 593 and ASTM F 594, Alloy Group 1 or 2 (ASTM F 738M and ASTM F 836M, Grade A1 or A4).

2.7 METAL FRAMING ANCHORS

A. Allowable Design Loads: Provide products with allowable design loads, as published by manufacturer, that meet or exceed those indicatedof products of manufacturers listed. Manufacturer's published values shall be determined from empirical data or by rational engineering analysis and demonstrated by comprehensive testing performed by a qualified independent testing agency.
B. Stainless-Steel Sheet: ASTM A 666, Type 304 or 316.

2.8 MISCELLANEOUS MATERIALS

A. Sill-Sealer Gaskets: Closed-cell neoprene foam, 1/4 inch (6.4 mm) thick, selected from manufacturer's standard widths to suit width of sill members indicated.
B. Adhesives for Gluing Furring to Concrete or Masonry: Formulation complying with ASTM D 3498 that is approved for use indicated by adhesive manufacturer.

PART 3 - EXECUTION

3.1 INSTALLATION, GENERAL

A. Set rough carpentry to required levels and lines, with members plumb, true to line, cut, and fitted. Fit rough carpentry to other construction; scribe and cope as needed for accurate fit. Locate furring, nailers, blocking, and similar supports to comply with requirements for attaching other construction.
B. Framing Standard: Comply with AF&PA's "Details for Conventional Wood Frame Construction," unless otherwise indicated.
C. Metal Framing Anchors: Install metal framing to comply with manufacturer's written instructions.
D. Do not splice structural members between supports, unless otherwise indicated.
E. Provide blocking and framing as indicated and as required to support facing materials, fixtures, specialty items, and trim.
   1. Provide metal clips for fastening gypsum board or lath at corners and intersections where framing or blocking does not provide a surface for fastening edges of panels. Space clips not more than 16 inches (406 mm) o.c.
F. Provide fire blocking in furred spaces, stud spaces, and other concealed cavities as indicated and as follows:
   1. Fire block furred spaces of walls, at each floor level, at ceiling, and at not more than 96 inches (2438 mm) o.c. with solid wood blocking or noncombustible materials accurately fitted to close furred spaces.
   2. Fire block concealed spaces of wood-framed walls and partitions at each floor level, at ceiling line of top story, and at not more than 96 inches (2438 mm) o.c. Where fire blocking is not inherent in framing system used, provide closely fitted solid wood blocks of same width as framing members and 2-inch nominal- (38-mm actual-) thickness.
   3. Fire block concealed spaces behind combustible cornices and exterior trim at not more than 20 feet (6 m) o.c.
G. Sort and select lumber so that natural characteristics will not interfere with installation or with fastening other materials to lumber. Do not use materials with defects that interfere with function of member or pieces that are too small to use with minimum number of joints or optimum joint arrangement.
H. Comply with AWPA M4 for applying field treatment to cut surfaces of preservative-treated lumber.
   1. Use copper naphthenate for items not continuously protected from liquid water.
I. Securely attach rough carpentry work to substrate by anchoring and fastening as indicated, complying with the following:
   1. NES NER-272 for power-driven fasteners.
   2. Table 2304.9.1, "Fastening Schedule," in ICC's International Building Code.
J. Use common wire nails, unless otherwise indicated. Select fasteners of size that will not fully penetrate members where opposite side will be exposed to view or will receive finish materials. Make tight connections between members. Install fasteners without splitting wood; do not countersink nail heads, unless otherwise indicated.

3.2 WOOD BLOCKING, AND NAILER INSTALLATION

A. Install where indicated and where required for screeding or attaching other work. Form to shapes indicated and cut as required for true line and level of attached work. Coordinate locations with other work involved.
B. Attach items to substrates to support applied loading. Recess bolts and nuts flush with surfaces, unless otherwise indicated.

3.3 PROTECTION

C. Protect rough carpentry from weather. If, despite protection, rough carpentry becomes wet, apply EPA-registered borate treatment. Apply borate solution by spraying to comply with EPA-registered label.

END OF SECTION 061000

SECTION 072419 - WATER-DRAINAGE EXTERIOR INSULATION AND FINISH SYSTEM (EIFS)

PART 1 - GENERAL

1.1 RELATED DOCUMENTS

A. Drawings and general provisions of the Contract, including General and Supplementary Conditions and Specification Sections, apply to this Section.

1.2 SUMMARY

A. Section includes water-drainage exterior insulation and finish system (EIFS) applied over water-resistive coating over water-resistant sheathing paper over sheathing.
B. Related Sections:
   1. Section 079200 "Joint Sealants" for sealing joints in EIFS with elastomeric joint sealants.

1.3 SYSTEM DESCRIPTION

A. Class PB EIFS: A non-load-bearing, exterior wall cladding system that consists of an insulation board attached adhesively, mechanically, or both to the substrate; an integrally reinforced base coat; and a textured protective finish coat.
B. Water-Drainage EIFS: EIFS with a means that allows water entering into an EIFS assembly to drain to the exterior.

1.4 PERFORMANCE REQUIREMENTS

A. EIFS Performance: Comply with the following:
   1. Bond Integrity: Free from bond failure within EIFS components or between system and supporting wall construction, resulting from exposure to fire, wind loads, weather, or other in-service conditions.
   2. Weathertightness: Resistant to water penetration from exterior into water-drainage EIFS and assemblies behind it or through them into interior of building that results in deterioration of thermal-insulating effectiveness or other degradation of EIFS and assemblies behind it, including substrates, supporting wall construction, and interior finish, and including a means that allows water entering into an EIFS assembly to drain to the exterior.
B. Class PB EIFS: Provide EIFS having physical properties and structural performance that comply with the following:
   1. Abrasion Resistance: Sample consisting of 1-inch- (25.4-mm-) thick EIFS mounted on 1/2-inch- (12.7-mm-) thick gypsum board; cured for a minimum of 28 days; and showing no cracking, checking, or loss of film integrity after exposure to 528 quarts (500 L) of sand when tested per ASTM D 968, Method A.
   2. Absorption-Freeze Resistance: No visible deleterious effects and negligible weight loss after 60 cycles per EIMA 101.01.
   3. Accelerated Weathering: Five samples per ICC-ES AC235 showing no cracking, checking, crazing, erosion, rusting, blistering, peeling, delamination, or other characteristics that might affect performance as a wall cladding after testing for 2000 hours when viewed under 5 times magnification per ASTM G 153, ASTM G 154 or ASTM G 155.
   4. Freeze-Thaw: No surface changes, cracking, checking, crazing, erosion, rusting, blistering, peeling, or delamination, or indications of delamination between components when viewed under 5 times magnification after 60 cycles per EIMA 101.01 and 10 cycles per ICC-ES AC235.
   5. Mildew Resistance of Finish Coat: Sample applied to 2-by-2-inch (50.8-by-50.8-mm) clean glass substrate, cured for 28 days, and showing no growth when tested per ASTM D 3273 and evaluated according to ASTM D 3274.
   6. Tensile Adhesion: No failure in the EIFS, adhesive, base coat, or finish coat when tested per EIMA 101.03 and ICC-ES AC235.
   7. Water Penetration: Sample consisting of 1-inch- (25.4-mm-) thick EIFS mounted on 1/2-inch- (12.7-mm-) thick gypsum board, cured for 28 days, and showing no water penetration into the plane of the base coat to expanded polystyrene board interface of the test specimen after 15 minutes at 6.24 lbf/sq. ft. (299 Pa) of air pressure difference or 20 percent of positive design wind pressure, whichever is greater, across the specimen during a test period when tested per EIMA 101.02.
   8. Water Resistance: Three samples, each consisting of 1-inch- (25.4-mm-) thick EIFS mounted on 1/2-inch- (12.7-mm-) thick gypsum board, cured for 28 days; and showing no cracking, checking, crazing, erosion, rusting, blistering, peeling, or delamination after testing for 14 days per ASTM D 2247.
   9. Impact Resistance: Sample consisting of 1-inch- (25.4-mm-) thick EIFS when constructed, conditioned, and tested per EIMA 101.86; and meeting or exceeding the following:
      a. High Impact Resistance: 90 to 150 inch-lb (10.2 to 17 J).
   10. Drainage: According to ICC-ES AC24 and ICC-ES AC235.
   11. Structural Performance Testing: EIFS assembly and components shall comply with ICC-ES AC235 when tested per ASTM E 330.

1.5 QUALITY ASSURANCE

A. Installer Qualifications: An installer who is certified in writing by EIFS manufacturer as qualified to install manufacturer's system using trained workers.
B. Source Limitations: Obtain EIFS from single source from single EIFS manufacturer and from sources approved by EIFS manufacturer as compatible with system components.
C. Fire-Test-Response Characteristics: Provide EIFS and system components with the following fire-test-response characteristics as determined by testing identical EIFS and system components per test method indicated below by UL or another testing and inspecting agency acceptable to authorities having jurisdiction. Identify products with appropriate markings of applicable testing agency.
   1. Full-Scale Multistory Fire Test: Tested mockup, representative of completed multistory wall assembly of which EIFS is a part, complies with UBC Standard 26-4 for test method and required fire-test-response characteristics of exterior non-load-bearing wall panel assemblies containing foam-plastic insulation.
   2. Full-Scale Diversified Fire Test: Tested mockup, representative of completed multistory wall assembly of which EIFS is a part, showing no significant contribution to vertical or horizontal flame spread per ASTM E 108 modified for testing vertical walls.
   3. Intermediate-Scale Multistory Fire Test: Tested mockup, representative of completed multistory wall assembly of which EIFS is a part, complies with NFPA 285 and UBC Standard 26-9 for test method and required fire-test-response characteristics of exterior non-load-bearing wall panel assemblies containing foam-plastic insulation.
   4. Radiant Heat Exposure: No ignition of EIFS when tested according to NFPA 268.
   5. Potential Heat: Acceptable level when tested according to NFPA 259.
   6. Surface-Burning Characteristics: Provide insulation board, adhesives, base coats, and finish coats with flame-spread index of 25 or less and smoke-developed index of 450 or less, per ASTM E 84 and UBC Standard 8-1.

1.6 DELIVERY, STORAGE, AND HANDLING

A. Deliver materials in original, unopened packages with manufacturers' labels intact and clearly identifying products.
B. Store materials inside and under cover; keep them dry and protected from weather, direct sunlight, surface contamination, aging, corrosion, damaging temperatures, construction traffic, and other causes.
   1. Stack insulation board flat and off the ground.
   2. Protect plastic insulation against ignition at all times. Do not deliver plastic insulating materials to Project site before installation time.
   3. Complete installation and concealment of plastic materials as rapidly as possible in each area of construction.

1.7 PROJECT CONDITIONS

A. Weather Limitations: Maintain ambient temperatures above 40 deg F (4.4 deg C) for a minimum of 24 hours before, during, and after adhesives or coatings are applied. Do not apply EIFS adhesives or coatings during rainfall. Proceed with installation only when existing and forecasted weather conditions and ambient outdoor air, humidity, and substrate temperatures permit EIFS to be applied, dried, and cured according to manufacturers' written instructions and warranty requirements.

1.8 COORDINATION

A. Coordinate installation of EIFS with related Work specified in other Sections to ensure that wall assemblies, including sheathing, weather-resistant sheathing paper, flashing, trim, joint sealants, windows, and doors, are protected against damage from the effects of weather, age, corrosion, moisture, and other causes. Do not allow water to penetrate behind flashing and drainage plane that is behind water-drainage EIFS.

PART 2 - PRODUCTS

2.1 MATERIALS

A. Compatibility: Provide water-resistive barrier, adhesive, fasteners, board insulation, reinforcing meshes, base- and finish-coat systems, sealants, and accessories that are compatible with one another and with substrates and approved for use by EIFS manufacturer for Project.
B. Sheet-Applied Water-Resistive Barrier: EIFS manufacturer's recommended product and accessories for use as water/weather-resistive barriers, compatible with substrate, and complying with physical and performance criteria of ICC-ES AC209 and ICC-ES AC212.
   1. Sheathing Joint Compound and Tape: Type recommended by EIFS manufacturer for sealing joints between and penetrations through sheathing.
C. Primer/Sealer: EIFS manufacturer's standard substrate conditioner designed to seal substrates from moisture penetration and to improve the bond between substrate of type indicated and adhesive used for application of insulation.
D. Flexible-Membrane Flashing: Cold-applied, fully self-adhering, self-healing, rubberized-asphalt and polyethylene-film composite sheet or tape and primer; EIFS manufacturer's standard or product recommended in writing by EIFS manufacturer.
E. Spacers: Closed-cell polyethylene or Woven or fused, self-furring, PVC mesh lath furring strips; EIFS manufacturer's standard or product recommended in writing by EIFS manufacturer with manufacturer's standard corrosion-resistant mechanical fasteners suitable for intended substrate.
F. Insulation Adhesive: EIFS manufacturer's standard formulation designed for indicated use; compatible with substrate and complying with one of the following:
   1. Job-mixed formulation of portland cement complying with ASTM C 150, Type I, and polymer-based adhesive specified for base coat.
   2. Factory-blended dry formulation of portland cement, dry polymer admixture, and fillers specified for base coat.
   3. Factory-mixed noncementitious formulation designed for adhesive attachment of insulation to substrates of type indicated, as recommended by EIFS manufacturer.
H. Molded, Rigid Cellular Polystyrene Board Insulation: Comply with ASTM C 578, Type I; EIFS manufacturer's requirements; and EIMA's "EIMA Guideline Specification for Expanded Polystyrene (EPS) Insulation Board" for most stringent requirements for material performance nd qualities of insulation, including dimensions and permissible variations, and the following:
   1. Aging: Before cutting and shipping, age insulation in block form by air drying for not less than six weeks or by another method approved by EIMA that produces equivalent results.
   2. Flame-Spread and Smoke-Developed Indexes: 25 and 450 or less, respectively, per ASTM E 84.
   3. Dimensions: Provide insulation boards not more than 24 by 48 inches (610 by 1219 mm) and in thickness indicated but not more than 4 inches (102 mm) thick or less than thickness allowed by ASTM C 1397.
   4. Channeled Board Insulation: EIFS manufacturer's standard factory-fabricated profile with linear, vertical drainage channels, slots, or waves on the back side of board.
   5. Board Insulation Closure Blocks: EIFS manufacturer's standard density, size, and configuration.
   6. Foam Shapes: Provide with profiles and dimensions indicated on Drawings.
I. Reinforcing Mesh: Balanced, alkali-resistant, open-weave, glass-fiber mesh treated for compatibility with other EIFS materials, made from continuous multiend strands with retained mesh tensile strength of not less than 120 lbf/in. (21 dN/cm) per ASTM E 2098 and EIMA 105.01; complying with ASTM D 578 and as required to meet performance criteria indicated.
J. Base-Coat Materials: EIFS manufacturer's standard mixture complying with one of the following requirements:
   1. Job-mixed formulation of portland cement complying with ASTM C 150, Type I, white or natural color; and manufacturer's standard polymer-emulsion adhesive designed for use with portland cement.
   2. Job-combined formulation of manufacturer's standard polymer-emulsion adhesive and manufacturer's standard dry mix containing portland cement.
   3. Factory-blended dry formulation of portland cement, dry polymer admixture, and inert fillers to which only water is added at Project site.
   4. Factory-mixed noncementitious formulation of polymer-emulsion adhesive and inert fillers that is ready to use without adding other materials.
K. Waterproof Adhesive/Base-Coat Materials: EIFS manufacturer's standard waterproof formulation and complying with one of the following:
   1. Job-mixed formulation of portland cement complying with ASTM C 150, Type I, white or natural color; and manufacturer's standard polymer-emulsion adhesive designed for use with portland cement.
   2. Job-combined formulation of manufacturer's standard polymer-emulsion adhesive and manufacturer's standard dry mix containing portland cement.
L. Primer: EIFS manufacturer's standard factory-mixed, elastomeric-polymer primer for preparing base-coat surface for application of finish coat.
M. Finish-Coat Materials: EIFS manufacturer's standard acrylic-based coating, standard acrylic-based coating with enhanced mildew resistance or siliconized acrylic-based coating complying with the following:
   1. Factory-mixed formulation of polymer-emulsion binder, colorfast mineral pigments, sound stone particles, and fillers.
   2. Sealer: Manufacturer's waterproof, clear acrylic-based sealer for protecting finish coat.
   3. Colors: As indicated.
N. Water: Potable.
O. Mechanical Fasteners: EIFS manufacturer's standard corrosion-resistant fasteners consisting of thermal cap, standard washer and shaft attachments, and fastener indicated below; selected for properties of pullout, tensile, and shear strength required to resist design loads of application indicated; capable of pulling fastener head below surface of insulation board; and of the following description:
   1. For attachment to steel studs from 0.033 to 0.112 inch (0.84 to 2.84 mm) in thickness, provide steel drill screws complying with ASTM C 954.
   2. For attachment to light-gage steel framing members not less than 0.0179 inch (0.45 mm) in thickness, provide steel drill screws complying with ASTM C 1002.
   3. For attachment to wood framing members and plywood sheathing, provide steel drill screws complying with ASTM C 1002, Type W.
   4. For attachment to masonry and concrete substrates, provide sheathing dowel in form of a plastic wing-tipped fastener with thermal cap, sized to fit insulation thickness indicated and to penetrate substrate to depth required to secure anchorage.
   5. For attachment, provide manufacturer's standard fasteners suitable for substrate.
P. Trim Accessories: Type as designated or required to suit conditions indicated and to comply with EIFS manufacturer's written instructions; manufactured from UV-stabilized PVC; and complying with ASTM D 1784, manufacturer's standard Cell Class for use intended, and ASTM C 1063.
   1. Casing Bead: Prefabricated, one-piece type for attachment behind insulation, of depth required to suit thickness of coating and insulation, with face leg perforated for bonding to coating and back leg.
   2. Drip Screed/Track: Prefabricated, one-piece type for attachment behind insulation with face leg extended to form a drip, of depth required to suit thickness of coating and insulation, with face leg perforated for bonding to coating and back leg.
   3. Weep Screed/Track: Prefabricated, one-piece type for attachment behind insulation with perforated face leg extended to form a drip and weep holes in track bottom, of depth required to suit thickness of coating and insulation, with face leg perforated for bonding to coating and back leg; designed to drain incidental moisture that gets into wall construction to the exterior at terminations of EIFS with drainage.
   4. Expansion Joint: Prefabricated, one-piece V profile; designed to relieve stress of movement.
   5. Parapet Cap Flashing: Type for both flashing and covering parapet top with design complying with ASTM C 1397.

2.2 ELASTOMERIC SEALANTS

A. Elastomeric Sealant Products: Provide EIFS manufacturer's listed and recommended chemically curing, elastomeric sealant that is compatible with joint fillers, joint substrates, and other related materials, and complies with requirements for products and testing indicated in ASTM C 1481 and with requirements in Section 079200 "Joint Sealants" for products corresponding to description indicated below:
   1. Single-component, nonsag, neutral-curing silicone sealant.
B. Sealant Color: Match adjacent materials.

2.3 MIXING

A. General: Comply with EIFS manufacturer's requirements for combining and mixing materials. Do not introduce admixtures, water, or other materials except as recommended by EIFS manufacturer. Mix materials in clean containers. Use materials within time period specified by EIFS manufacturer or discard.

PART 3 - EXECUTION

3.1 EXAMINATION

Coordinate Work of this Section with requirements for erection tolerances, etc., that must be included in other related Sections.

A. Examine substrates, areas, and conditions, with Installer present, for compliance with requirements for installation tolerances and other conditions affecting performance of EIFS.
B. Examine roof edges, wall framing, flashings, openings, substrates, and junctures at other construction for suitable conditions where EIFS will be installed.
C. Proceed with installation only after unsatisfactory conditions have been corrected.
   1. Begin coating application only after surfaces are dry.
   2. Application of coating indicates acceptance of surfaces and conditions.

3.2 PREPARATION

A. Protect contiguous work from moisture deterioration and soiling caused by application of EIFS. Provide temporary covering and other protection needed to prevent spattering of exterior finish coats on other work.
B. Protect EIFS, substrates, and wall construction behind them from inclement weather during installation. Prevent penetration of moisture behind drainage plane of EIFS and deterioration of substrates.
C. Prepare and clean substrates to comply with EIFS manufacturer's written instructions to obtain optimum bond between substrate and adhesive for insulation.

3.3 EIFS INSTALLATION, GENERAL

A. Comply with EIFS manufacturer's written instructions for installation of EIFS as applicable to each type of substrate indicated.

3.4 SUBSTRATE PROTECTION APPLICATION

A. Primer/Sealer: Apply over sheathings substrates to protect substrates from degradation and where required by EIFS manufacturer for improving adhesion of insulation to substrate.
B. Sheet-Applied Water-Resistive Barrier: Apply over substrates to protect substrates from degradation and to provide water-/weather-resistive barrier.
   1. Tape and seal joints, exposed edges, terminations, and inside and outside corners of sheathing unless otherwise indicated by EIFS manufacturer's written instructions.
C. Flexible-Membrane Flashing: Install over weather-resistive barrier, applied and lapped to shed water; seal at openings, penetrations, terminations, and where indicated by EIFS manufacturer's written instructions to protect wall assembly from degradation. Prime substrates, if required, and install flashing to comply with EIFS manufacturer's written instructions and details.

3.5 TRIM INSTALLATION

A. Trim: Apply trim accessories at perimeter of EIFS, at expansion joints and elsewhere as indicated, according to EIFS manufacturer's written instructions. Coordinate with installation of insulation.
   1. Weep Screed/Track: Use at bottom termination edges, at window and door heads, and at floor line expansion joints of water-drainage EIFS unless otherwise indicated.
   2. Expansion Joint: Use where recommended by manufacturer.
   3. Casing Bead: Use at other locations.
   4. Parapet Cap Flashing: Use where indicated recommended by manufacturer.

3.6 INSULATION INSTALLATION

A. Board Insulation: Adhesively and/or mechanically attach insulation to substrate in compliance with ASTM C 1397, EIFS manufacturer's written instructions, and the following:
   1. Apply adhesive to insulation by notched-trowel method in a manner that results in coating the entire surface of sheathing with adhesive once insulation is adhered to sheathing unless EIFS manufacturer's written instructions specify using primer/sealer with ribbon-and-dab method. Apply adhesive to a thickness of not less than 1/4 inch (6.4 mm) for factory mixed and not less than 3/8 inch (9.6 mm) for field mixed, measured from surface of insulation before placement.
   2. Apply adhesive to insulation by notched-trowel method in a manner that results in coating the entire surface of drainage mat with adhesive once insulation is adhered to drainage mat.
   3. Apply adhesive to ridges on back of insulation by notched-trowel method in a manner that results in full adhesive contact over the entire surface of ridges, leaving channels free of adhesive once insulation is adhered to substrate.
   4. Press and slide insulation into place. Apply pressure over the entire surface of insulation to accomplish uniform contact, high initial grab, and overall level surface.
   5. Allow adhered insulation to remain undisturbed for period recommended by EIFS manufacturer, but not less than 24 hours, before installing mechanical fasteners, beginning rasping and sanding insulation, or applying base coat and reinforcing mesh.
   6. Mechanically attach insulation to substrate by method complying with EIFS manufacturer's written instructions. Install top surface of fastener heads flush with plane of insulation. Install fasteners into or through substrates with the following minimum penetration:
      a. Steel Framing: 5/16 inch (8 mm).
      b. Wood Framing: 1 inch (25 mm).
      c. Concrete and Masonry: 1 inch (25 mm).
   7. Apply insulation over drainage mat and dry substrates in courses with long edges of boards oriented horizontally.
   8. Begin first course of insulation from a level base line and work upward.
   9. Stagger vertical joints of insulation boards in successive courses to produce running bond pattern. Locate joints so no piece of insulation is less than 12 inches (300 mm) wide or 6 inches (150 mm) high. Offset joints not less than 6 inches (150 mm) from corners of window and door openings and not less than 4 inches (100 mm) from aesthetic reveals.
      a. Adhesive Attachment: Offset joints of insulation not less than 6 inches (150 mm) from horizontal and 4 inches (100 mm) from vertical joints in sheathing.
      b. Mechanical Attachment: Offset joints of insulation from horizontal joints in sheathing.
   10. Place insulation with adhesive strips and channels, slots, or waves aligned in the vertical position for drainage. Align drainage channels, slots, or waves with channels, slots, or waves in insulation boards above and below.
   11. Interlock ends at internal and external corners.
   12. Abut insulation tightly at joints within and between each course to produce flush, continuously even surfaces without gaps or raised edges between boards. If gaps greater than 1/16 inch (1.6 mm) occur, fill with insulation cut to fit gaps exactly; insert insulation without using adhesive or other material.
   13. Cut insulation to fit openings, corners, and projections precisely and to produce edges and shapes complying with details indicated.
   14. Rasp or sand flush entire surface of insulation to remove irregularities projecting more than 1/16 inch (1.6 mm) from surface of insulation and to remove yellowed areas due to sun exposure; do not create depressions deeper than 1/16 inch (1.6 mm).
   15. Cut aesthetic reveals in outside face of insulation with high-speed router and bit configured to produce grooves, rabbets, and other features that comply with profiles and locations indicated. Do not reduce insulation thickness at aesthetic reveals to less than 3/4 inch (19 mm).
   16. Install foam shapes and attach to sheathing and structure.
   17. Interrupt insulation for expansion joints where indicated.
   18. Install insulation closure blocks using ribbon-and-dab method to create air zones where indicated.
   19. Form joints for sealant application by leaving gaps between adjoining insulation edges and between insulation edges and dissimilar adjoining surfaces. Make gaps wide enough to produce joint widths indicated after encapsulating joint substrates with base coat and reinforcing mesh.
   20. Form joints for sealant application with back-to-back casing beads for joints within EIFS and with perimeter casing beads at dissimilar adjoining surfaces. Make gaps between casing beads and between perimeter casing beads and adjoining surfaces of width indicated.
   21. After installing insulation and before applying field-applied reinforcing mesh, fully wrap board edges. Cover edges of board and extend encapsulating mesh not less than 2-1/2 inches (64 mm) over front and back face unless otherwise indicated on Drawings.
   22. Treat exposed edges of insulation as follows:
      a. Except for edges forming substrates of sealant joints, encapsulate with base coat, reinforcing mesh, and finish coat.
      b. Encapsulate edges forming substrates of sealant joints within EIFS or between EIFS and other work with base coat and reinforcing mesh.
      c. At edges trimmed by accessories, extend base coat, reinforcing mesh, and finish coat over face leg of accessories.
   23. Coordinate installation of flashing and insulation to produce wall assembly that does not allow water to penetrate behind flashing and water-/weather-resistive barrier.
B. Expansion Joints: Install where required by EIFS manufacturer, and as follows:
   1. At expansion joints in substrates behind EIFS.
   2. Where EIFS adjoin dissimilar substrates, materials, and construction, including other EIFS.
   3. At floor lines in multilevel wood-framed construction.
   4. Where wall height or building shape changes.
   5. Where EIFS manufacturer requires joints in long continuous elevations.

3.7 BASE-COAT INSTALLATION

A. Base Coat: Apply to exposed surfaces of insulation and foam shapes in minimum thickness recommended in writing by EIFS manufacturer, but not less than 1/16-inch (1.6-mm) dry-coat thickness.
B. Reinforcing Mesh: Embed type indicated below in wet base coat to produce wrinkle-free installation with mesh continuous at corners and overlapped not less than 2-1/2 inches (64 mm) or otherwise treated at joints to comply with ASTM C 1397 and EIFS manufacturer's written instructions. Do not lap reinforcing mesh within 8 inches (204 mm) of corners. Completely embed mesh, applying additional base-coat material if necessary, so reinforcing-mesh color and pattern are not visible.
C. Double-Layer Reinforcing Mesh Application: As required to comply with performance criteria indicated, apply second base coat and second layer of standard or intermediate-impact reinforcing mesh, overlapped not less than 2-1/2 inches (64 mm) or otherwise treated to comply with ASTM C 1397 and EIFS manufacturer's written instructions in same manner as first application. Do not apply until first base coat has cured.
D. Additional Reinforcing Mesh: Apply strip reinforcing mesh around openings extending 4 inches (100 mm) beyond perimeter. Apply additional 9-by-12-inch (230-by-300-mm) strip reinforcing mesh diagonally at corners of openings (re-entrant corners). Apply 8-inch- (200-mm-) wide strip reinforcing mesh at both inside and outside corners unless base layer of mesh is lapped not less than 4 inches (100 mm) on each side of corners.
   1. At aesthetic reveals, apply strip reinforcing mesh not less than 8 inches (200 mm) wide.
   2. Embed strip reinforcing mesh in base coat before applying first layer of reinforcing mesh.
E. Foam Shapes: Fully embed reinforcing mesh in base coat.
F. Double Base-Coat Application: As required to comply with performance criteria indicated, apply second base coat in same manner and thickness as first application except without reinforcing mesh. Do not apply until first base coat has cured.

3.9 FINISH-COAT INSTALLATION

A. Primer: Apply over dry base coat according to EIFS manufacturer's written instructions.
B. Finish Coat: Apply over dry primed base coat, maintaining a wet edge at all times for uniform appearance, in thickness required by EIFS manufacturer to produce a uniform finish of color and texture matching approved sample and free of cold joints, shadow lines, and texture variations.
   1. Texture: As indicated.
   2. Embed aggregate in finish coat according to EIFS manufacturer's written instructions to produce a uniform applied-aggregate finish of color and texture matching approved sample.
C. Sealer Coat: Apply over dry finish coat, in number of coats and thickness required by EIFS manufacturer.

3.10 INSTALLATION OF JOINT SEALANTS

A. Prepare joints and apply sealants, of type and at locations indicated, to comply with applicable requirements in Section 079200 "Joint Sealants" and in ASTM C 1481.
   1. Apply joint sealants after base coat has cured but before applying finish coat.
   2. Clean surfaces to receive sealants to comply with indicated requirements and EIFS manufacturer's written instructions.
   3. Apply primer recommended in writing by sealant manufacturer for surfaces to be sealed.
   4. Install sealant backing to control depth and configuration of sealant joint and to prevent sealant from adhering to back of joint.
   5. Apply masking tape to protect areas adjacent to sealant joints. Remove tape immediately after tooling joints, without disturbing joint seal.
   6. Recess sealant sufficiently from surface of EIFS so an additional sealant application, including cylindrical sealant backing, can be installed without protruding beyond EIFS surface.

3.11 FIELD QUALITY CONTROL

A. Special Inspections: Engage a qualified special inspector to perform the following special inspections:
   1. According to ICC-ES AC24 and ICC-ES AC235.
B. Testing Agency: Engage a qualified testing agency to perform tests and inspections.
C. EIFS Tests and Inspections: For the following:
   1. According to ICC-ES AC24 and ICC-ES AC235.
D. Remove and replace EIFS where test results indicate that EIFS do not comply with specified requirements.
E. Prepare test and inspection reports.

3.12 CLEANING AND PROTECTION

A. Remove temporary covering and protection of other work. Promptly remove coating materials from window and door frames and other surfaces outside areas indicated to receive EIFS coatings.

END OF SECTION 072419

SECTION 075000 - MEMBRANE ROOFING

PART 1 - GENERAL

1.1 RELATED DOCUMENTS

A. Drawings and general provisions of the Contract, including General and Supplementary Conditions and Specification Sections, apply to this Section.

1.2 SUMMARY

A. Section Includes:
   1. Membrane roofing system.
   2. Roof insulation.
B. Related Sections:
   1. Division 07 Section "Joint Sealants" for joint sealants, joint fillers, and joint preparation.

1.3 DEFINITIONS

A. Roofing Terminology: See ASTM D 1079 and glossary of NRCA's "The NRCA Roofing and Waterproofing Manual" for definitions of terms related to roofing work in this Section.

1.4 PERFORMANCE REQUIREMENTS

A. General Performance: Installed membrane roofing and base flashings shall withstand specified uplift pressures, thermally induced movement, and exposure to weather without failure due to defective manufacture, fabrication, installation, or other defects in construction. Membrane roofing and base flashings shall remain watertight.
B. Material Compatibility: Provide roofing materials that are compatible with one another under conditions of service and application required, as demonstrated by membrane roofing manufacturer based on testing and field experience.
C. Roofing System Design: Provide membrane roofing system that is identical to systems that have been successfully tested by a qualified testing and inspecting agency to resist uplift pressure calculated according to ASCE/SEI 7.
D. FM Approvals Listing: Provide membrane roofing, base flashings, and component materials that comply with requirements in FM Approvals 4450 and FM Approvals 4470 as part of a membrane roofing system, and that are listed in FM Approvals' "RoofNav" for Class 1 or noncombustible construction, as applicable. Identify materials with FM Approvals' markings.
   1. Fire/Windstorm Classification: Class 1A-120.
   2. Hail Resistance: SH.

1.5 QUALITY ASSURANCE

A. Manufacturer Qualifications: A qualified manufacturer that is UL listed and FM Approvals approved for membrane roofing system identical to that used for this Project.
B. Installer Qualifications: A qualified firm that is approved, authorized, or licensed by membrane roofing system manufacturer to install manufacturer's product and that is eligible to receive manufacturer's special warranty.
C. Source Limitations: Obtain components including roof insulation and fasteners for membrane roofing system from same manufacturer as membrane roofing or approved by membrane roofing manufacturer.
D. Exterior Fire-Test Exposure: ASTM E 108, Class A; for application and roof slopes indicated, as determined by testing identical membrane roofing materials by a qualified testing agency. Materials shall be identified with appropriate markings of applicable testing agency.

1.6 DELIVERY, STORAGE, AND HANDLING

A. Deliver roofing materials to Project site in original containers with seals unbroken and labeled with manufacturer's name, product brand name and type, date of manufacture, approval or listing agency markings, and directions for storing and mixing with other components.
B. Store liquid materials in their original undamaged containers in a clean, dry, protected location and within the temperature range required by roofing system manufacturer. Protect stored liquid material from direct sunlight.
   1. Discard and legally dispose of liquid material that cannot be applied within its stated shelf life.
C. Protect roof insulation materials from physical damage and from deterioration by sunlight, moisture, soiling, and other sources. Store in a dry location. Comply with insulation manufacturer's written instructions for handling, storing, and protecting during installation.
D. Handle and store roofing materials and place equipment in a manner to avoid permanent deflection of deck.

1.7 PROJECT CONDITIONS

A. Weather Limitations: Proceed with installation only when existing and forecasted weather conditions permit roofing system to be installed according to manufacturer's written instructions and warranty requirements.

1.8 WARRANTY

A. Special Warranty: Manufacturer's standard or customized form, without monetary limitation, in which manufacturer agrees to repair or replace components of membrane roofing system that fail in materials or workmanship within specified warranty period.
   1. Special warranty includes membrane roofing, base flashings, roof insulation, fasteners, cover boards, roofing accessories, and other components of membrane roofing system.
   2. Warranty Period: 10 years from date of Substantial Completion.
B. Special Project Warranty: Submit roofing Installer's warranty, on warranty form at end of this Section, signed by Installer, covering Work of this Section, including all components of membrane roofing system such as membrane roofing, base flashing, roof insulation, fasteners, cover boards, substrate boards, vapor retarders, roof pavers, and walkway products, for the following warranty period:
   1. Warranty Period: Two years from date of Substantial Completion.

PART 2 - PRODUCTS

2.1 MEMBRANE ROOFING

A. Membrane:
   1. Thickness: As required to meet performance criteria/warranty specified.

2.2 AUXILIARY MEMBRANE ROOFING MATERIALS

A. General: Auxiliary membrane roofing materials recommended by roofing system manufacturer for intended use and compatible with membrane roofing.
   1. Liquid-type auxiliary materials shall comply with VOC limits of authorities having jurisdiction.

(CONTINUED NEXT SHEET)

BRIDGE POINTE RETAIL CENTER IMPROVEMENTS

NEYER PROPERTIES

6400 - 6550 Riverside Drive
Dublin, Ohio 43017

COMMISSION NUMBER: 1205

TRIAD ARCHITECTS
936 Eastwind Drive, Suite 202
Columbus, Ohio 43081
Phone: (614) 942-1050
Fax: (614) 942-1059
main@triadarchitects.com

DATE:
9/25/2012 - PERMIT SET

SEAL:
STATE OF OHIO
BRENT T. FOLEY
14892
REGISTERED ARCHITECT

BRENT T. FOLEY, LIC. 14892
EXP: DEC 31, 2012

SPECIFICATIONS

DRAWN BY: AML
CHECKED BY: BTF/ZP

A0.6

P:\Pro-12\1205-Equity Bridge Pointe\100-Cad\20 Current Drawings\1205-Bridge Pointe-Sheet Specifications.dwg, 9/25/2012 10:28:16 AM

2. Adhesives and sealants that are not on the exterior side of weather barrier shall comply with the following limits for VOC content when calculated according to 40 CFR 59, Subpart D (EPA Method 24):
   a. Plastic Foam Adhesives: 50 g/L.
   b. Gypsum Board and Panel Adhesives: 50 g/L.
   c. Multipurpose Construction Adhesives: 70 g/L.
   d. Fiberglass Adhesives: 80 g/L.
   e. Contact Adhesive: 80 g/L.
   f. Single-Ply Roof Membrane Sealants: 450 g/L.
   g. Nonmembrane Roof Sealants: 300 g/L.
   h. Sealant Primers for Nonporous Substrates: 250 g/L.
   i. Sealant Primers for Porous Substrates: 775 g/L.
   j. Other Adhesives and Sealants: 250 g/L.

B. Sheet Flashing: Manufacturer's standard, as required to meet performance criteria/warranty specified.

C. Bonding Adhesive: Manufacturer's standard, as required to meet performance criteria/warranty specified.

D. Seaming Material: Manufacturer's standard, as required to meet performance criteria/warranty specified.

E. Lap Sealant: Manufacturer's standard, as required to meet performance criteria/warranty specified.

F. Water Cutoff Mastic: Manufacturer's standard, as required to meet performance criteria/warranty specified.

G. Metal Termination Bars: Manufacturer's standard, predrilled stainless-steel or aluminum bars, approximately 1 by 1/8 inch (25 by 3 mm) thick; with anchors.

H. Fasteners: Factory-coated steel fasteners and metal or plastic plates complying with corrosion-resistance provisions in FM Approvals 4470, designed for fastening membrane to substrate, and acceptable to roofing system manufacturer.

I. Miscellaneous Accessories: Provide pourable sealers, preformed cone and vent sheet flashings, preformed inside and outside corner sheet flashings, reinforced securement strips, T-joint covers, in-seam sealants, termination reglets, cover strips, and other accessories.

2.3 ROOF INSULATION

A. General: Preformed roof insulation boards manufactured or approved by membrane roofing manufacturer, selected from manufacturer's standard sizes suitable for application, of thicknesses indicated, and that produce FM Approvals-approved roof insulation.

B. Expanded Polystyrene Board Insulation: ASTM C 578, Type IX, 1.8-lb/cu. ft. (29-kg/cu. m) minimum density.

C. Polyisocyanurate Board Insulation: ASTM C 1289, Type II, Class 1, Grade 2 or Type II, Class I, Grade 3, felt or glass-fiber mat facer on both major surfaces.

D. Tapered Insulation: Provide factory-tapered insulation boards fabricated to slope of 1/4 inch per 12 inches (1:48) minimum unless otherwise indicated.

E. Provide preformed saddles, crickets, tapered edge strips, and other insulation shapes where indicated for sloping to drain. Fabricate to slopes indicated.

2.4 INSULATION ACCESSORIES

A. General: Furnish roof insulation accessories recommended by insulation manufacturer for intended use and compatibility with membrane roofing.

B. Fasteners: Factory-coated steel fasteners and metal or plastic plates complying with corrosion-resistance provisions in FM Approvals 4470, designed for fastening roof insulation and cover boards to substrate, and acceptable to roofing system manufacturer.

C. Cover Board: ASTM C 1278/C 1278M, cellulosic-fiber reinforced, water-resistant, Type X gypsum substrate, 5/8 inch (16 mm) thick.

2.5 WALKWAYS

A. Flexible Walkways: Factory-formed, nonporous, heavy-duty, solid-rubber, slip-resisting, surface-textured walkway pads or rolls, approximately 3/16 inch (5 mm) thick, and acceptable to membrane roofing system manufacturer.

PART 3 - EXECUTION

3.1 EXAMINATION

A. Examine substrates, areas, and conditions, with Installer present, for compliance with the following requirements and other conditions affecting performance of roofing system:
   1. Verify that roof openings and penetrations are in place and curbs are set and braced and that roof drain bodies are securely clamped in place.
   2. Verify that wood blocking, curbs, and nailers are securely anchored to roof deck at penetrations and terminations and that nailers match thicknesses of insulation.

B. Proceed with installation only after unsatisfactory conditions have been corrected.

3.2 PREPARATION

A. Clean substrate of dust, debris, moisture, and other substances detrimental to roofing installation according to roofing system manufacturer's written instructions. Remove sharp projections.

B. Prevent materials from entering and clogging roof drains and conductors and from spilling or migrating onto surfaces of other construction. Remove roof-drain plugs when no work is taking place or when rain is forecast.

C. Complete terminations and base flashings and provide temporary seals to prevent water from entering completed sections of roofing system at the end of the workday or when rain is forecast. Remove and discard temporary seals before beginning work on adjoining roofing.

3.3 INSULATION INSTALLATION

A. Coordinate installing membrane roofing system components so insulation is not exposed to precipitation or left exposed at the end of the workday.

B. Comply with membrane roofing system and insulation manufacturer's written instructions for installing roof insulation.

C. Install tapered insulation under area of roofing to conform to slopes indicated.

D. Install insulation under area of roofing to achieve required thickness. Where overall insulation thickness is 2.7 inches (68 mm) or greater, install two or more layers with joints of each succeeding layer staggered from joints of previous layer a minimum of 6 inches (150 mm) in each direction.

E. Trim surface of insulation where necessary at roof drains so completed surface is flush and does not restrict flow of water.

F. Install insulation with long joints of insulation in a continuous straight line with end joints staggered between rows, abutting edges and ends between boards. Fill gaps exceeding 1/4 inch (6 mm) with insulation.
   1. Cut and fit insulation within 1/4 inch (6 mm) of nailers, projections, and penetrations.

G. Mechanically Fastened Insulation: Install each layer of insulation and secure to deck using mechanical fasteners specifically designed and sized for fastening specified board-type roof insulation to deck type.
   1. Fasten insulation according to requirements in FM Approvals' "RoofNav" for specified Windstorm Resistance Classification.
   2. Fasten insulation to resist uplift pressure at corners, perimeter, and field of roof.

H. Install cover boards over insulation with long joints in continuous straight lines with end joints staggered between rows. Offset joints of insulation below a minimum of 6 inches (150 mm) in each direction. Loosely butt cover boards together and fasten to roof deck.
   1. Fasten cover boards according to requirements in FM Approvals' "RoofNav" for specified Windstorm Resistance Classification.
   2. Fasten cover boards to resist uplift pressure at corners, perimeter, and field of roof.

3.4 ADHERED MEMBRANE ROOFING INSTALLATION

A. Adhere membrane roofing over area to receive roofing according to membrane roofing system manufacturer's written instructions. Unroll membrane roofing and allow to relax before installing.

B. Start installation of membrane roofing in presence of membrane roofing system manufacturer's technical personnel.

C. Accurately align membrane roofing and maintain uniform side and end laps of minimum dimensions required by manufacturer. Stagger end laps.

D. Bonding Adhesive: Apply to substrate and underside of membrane roofing at rate required by manufacturer and allow to partially dry before installing membrane roofing. Do not apply to splice area of membrane roofing.

E. In addition to adhering, mechanically fasten membrane roofing securely at terminations, penetrations, and perimeters.

F. Apply membrane roofing with side laps shingled with slope of roof deck where possible.

G. Seam Installation: Manufacturer's standard, as required to meet performance criteria/warranty specified.

H. Repair tears, voids, and lapped seams in roofing that does not comply with requirements.

I. Spread sealant or mastic bed over deck drain flange at roof drains and securely seal membrane roofing in place with clamping ring.

J. Install membrane roofing and auxiliary materials to tie in to existing membrane roofing to maintain weather-tightness of transition and to not void warranty for existing membrane roofing system.

3.5 BASE FLASHING INSTALLATION

A. Install sheet flashings and preformed flashing accessories and adhere to substrates according to membrane roofing system manufacturer's written instructions.

B. Apply bonding adhesive to substrate and underside of sheet flashing at required rate and allow to partially dry. Do not apply to seam area of flashing.

C. Flash penetrations and field-formed inside and outside corners with cured or uncured sheet flashing.

D. Clean splice areas, apply splicing cement, and firmly roll side and end laps of overlapping sheets to ensure a watertight seam installation. Apply lap sealant and seal exposed edges of sheet flashing terminations.

E. Terminate and seal top of sheet flashings and mechanically anchor to substrate through termination bars.

3.6 WALKWAY INSTALLATION

A. Flexible Walkways: Install walkway products in locations indicated. Adhere walkway products to substrate with compatible adhesive according to roofing system manufacturer's written instructions.

3.7 FIELD QUALITY CONTROL

A. Testing Agency: Engage a qualified independent testing agency to perform inspections.

B. Final Roof Inspection: Arrange for roofing system manufacturer's technical personnel to inspect roofing installation on completion.

C. Repair or remove and replace components of membrane roofing system where inspections indicate that they do not comply with specified requirements.

D. Additional inspections, at Contractor's expense, will be performed to determine compliance of replaced or additional work with specified requirements.

3.8 PROTECTING AND CLEANING

A. Protect membrane roofing system from damage and wear during remainder of construction period. When remaining construction will not affect or endanger roofing, inspect roofing for deterioration and damage, describing its nature and extent in a written report, with copies to Architect and Owner.

B. Correct deficiencies in or remove membrane roofing system that does not comply with requirements, repair substrates and repair or reinstall membrane roofing system to a condition free of damage and deterioration at time of Substantial Completion and according to warranty requirements.

C. Clean overspray and spillage from adjacent construction using cleaning agents and procedures recommended by manufacturer of affected construction.

END OF SECTION 075000

SECTION 077100 - ROOF SPECIALTIES

PART 1 - GENERAL

1.1 RELATED DOCUMENTS

A. Drawings and general provisions of the Contract, including General and Supplementary Conditions and Specification Sections, apply to this Section.

1.2 SUMMARY

A. Section Includes:
   1. Copings.

B. Related Sections:
   1. Division 06 Section "Rough Carpentry" for wood nailers, curbs, and blocking.
   2. Division 07 Section "Joint Sealants" for field-applied sealants between roof specialties and adjacent materials.

1.3 PERFORMANCE REQUIREMENTS

A. General Performance: Roof specialties shall withstand exposure to weather and resist thermally induced movement without failure, rattling, leaking, or fastener disengagement due to defective manufacture, fabrication, installation, or other defects in construction.

B. FM Approvals' Listing: Manufacture and install copings and roof-edge flashings that are listed in FM Approvals' "RoofNav" and approved for windstorm classification, Class 1-90. Identify materials with FM Approvals' markings.

C. SPRI Wind Design Standard: Manufacture and install copings and roof-edge flashings tested according to SPRI ES-1 and capable of resisting the following design pressures:
   1. Design Pressure: 60 lbs/ft.

D. Thermal Movements: Allow for thermal movements from ambient and surface temperature changes to prevent buckling, opening of joints, hole elongation, overstressing of components, failure of joint sealants, failure of connections, and other detrimental effects. Provide clips that resist rotation and avoid shear stress as a result of thermal movements. Base calculations on surface temperatures of materials due to both solar heat gain and nighttime-sky heat loss.
   1. Temperature Change (Range): 120 deg F (67 deg C), ambient; 180 deg F (100 deg C), material surfaces.

1.4 DELIVERY, STORAGE, AND HANDLING

A. Do not store roof specialties in contact with other materials that might cause staining, denting, or other surface damage. Store roof specialties away from uncured concrete and masonry.

B. Protect strippable protective covering on roof specialties from exposure to sunlight and high humidity, except to extent necessary for the period of roof specialties installation.

1.5 WARRANTY

A. Special Warranty on Painted Finishes: Manufacturer's standard form in which manufacturer agrees to repair finish or replace roof specialties that show evidence of deterioration of factory-applied finishes within specified warranty period.
   1. Fluoropolymer Finish: Deterioration includes, but is not limited to, the following:
      a. Color fading more than 5 Hunter units when tested according to ASTM D 2244.
      b. Chalking in excess of a No. 8 rating when tested according to ASTM D 4214.
      c. Cracking, checking, peeling, or failure of paint to adhere to bare metal.
   2. Finish Warranty Period: 20 years from date of Substantial Completion.

PART 2 - PRODUCTS

2.1 EXPOSED METALS

A. Aluminum Extrusions: ASTM B 221 (ASTM B 221M), alloy and temper recommended by manufacturer for type of use and finish indicated, finished as follows:
   1. Exposed High-Performance Organic Finish: Prepare, pretreat, and apply coating to exposed metal surfaces to comply with coating and resin manufacturers' written instructions.
      a. Two-Coat Fluoropolymer: AAMA 2605. System consisting of primer and fluoropolymer color topcoat containing not less than 70 percent PVDF resin by weight.

B. Zinc-Coated (Galvanized) Steel Sheet: ASTM A 653/A 653M, G90 (Z275) coating designation.
   1. Surface: Embossed finish.
   2. Exposed Coil-Coated Finishes: Prepainted by the coil-coating process to comply with ASTM A 755/A 755M. Prepare, pretreat, and apply coating to exposed metal surfaces to comply with coating and resin manufacturers' written instructions.
      a. Two-Coat Fluoropolymer: AAMA 621. System consisting of primer and fluoropolymer color topcoat containing not less than 70 percent PVDF resin by weight.

2.2 CONCEALED METALS

A. Aluminum Extrusions: ASTM B 221 (ASTM B 221M), alloy and temper recommended by manufacturer for type of use and structural performance indicated, mill finished.

B. Stainless-Steel Sheet: ASTM A 240/A 240M or ASTM A 666, Type 304.

C. Zinc-Coated (Galvanized) Steel Sheet: ASTM A 653/A 653M, G90 (Z275) coating designation.

2.3 UNDERLAYMENT MATERIALS

A. Felt: ASTM D 226, Type II (No. 30), asphalt-saturated organic felt, nonperforated.

B. Self-Adhering, High-Temperature Sheet: Minimum 30 to 40 mils (0.76 to 1.0 mm) thick, consisting of slip-resisting polyethylene-film top surface laminated to layer of butyl or SBS-modified asphalt adhesive, with release-paper backing; cold applied. Provide primer when recommended by underlayment manufacturer.
   1. Thermal Stability: ASTM D 1970; stable after testing at 240 deg F (116 deg C).
   2. Low-Temperature Flexibility: ASTM D 1970; passes after testing at minus 20 deg F (29 deg C).

C. Polyethylene Sheet: 6-mil- (0.15-mm-) thick polyethylene sheet complying with ASTM D 4397.

D. Slip Sheet: Building paper, 3-lb/100 sq. ft. (0.16-kg/sq. m) minimum, rosin sized.

2.4 MISCELLANEOUS MATERIALS

A. General: Provide materials and types of fasteners, protective coatings, sealants, and other miscellaneous items required by manufacturer for a complete installation.

B. Fasteners: Manufacturer's recommended fasteners, suitable for application and designed to meet performance requirements. Furnish the following unless otherwise indicated:
   1. Exposed Penetrating Fasteners: Not permitted.
   2. Fasteners for Aluminum: Aluminum or Series 300 stainless steel.
   3. Fasteners for Zinc-Coated (Galvanized) Steel Sheet: Series 300 stainless steel or hot-dip zinc-coated steel according to ASTM A 153/A 153M or ASTM F 2329.

C. Elastomeric Sealant: ASTM C 920, elastomeric silicone polymer sealant of type, grade, class, and use classifications required by roofing-specialty manufacturer for each application. Refer to Division 07 Section "Joint Sealants" for additional requirements.

D. Butyl Sealant: ASTM C 1311, single-component, solvent-release butyl rubber sealant; polyisobutylene plasticized; heavy bodied for hooked-type expansion joints with limited movement.

E. Bituminous Coating: Cold-applied asphalt emulsion complying with ASTM D 1187.

F. Asphalt Roofing Cement: ASTM D 4586, asbestos free, of consistency required for application.

2.5 COPINGS

A. Copings: Manufactured coping system consisting of formed-metal coping cap in section lengths not exceeding 12 feet (3.6 m) , concealed anchorage, corner units, end cap units, and concealed splice plates with same finish as coping caps.
   1. Coping-Cap Material: Formed or Extruded aluminum, 0.063 inch (1.60 mm) thick .
      a. Finish: Two-coat fluoropolymer.
      b. Color: As indicated.
   2. Corners: Factory mitered and continuously welded .
   3. Coping-Cap Attachment Method: Snap-on , fabricated from coping-cap material.
   4. Snap-on-Coping Anchor Plates: Concealed, galvanized-steel sheet, 12 inches (300 mm) wide, with integral cleats.

2.6 GENERAL FINISH REQUIREMENTS

A. Comply with NAAMM's "Metal Finishes Manual for Architectural and Metal Products" for recommendations for applying and designating finishes.

B. Protect mechanical and painted finishes on exposed surfaces from damage by applying a strippable, temporary protective covering before shipping.

C. Appearance of Finished Work: Noticeable variations in same piece are not acceptable. Variations in appearance of adjoining components are acceptable if they are within the range of approved Samples and are assembled or installed to minimize contrast.

PART 3 - EXECUTION

3.1 EXAMINATION

A. Examine substrates, areas, and conditions, with Installer present, to verify actual locations, dimensions, and other conditions affecting performance of the Work.

B. Examine walls, roof edges, and parapets for suitable conditions for roof specialties.

C. Verify that substrate is sound, dry, smooth, clean, sloped for drainage, and securely anchored.

D. Proceed with installation only after unsatisfactory conditions have been corrected.

3.2 UNDERLAYMENT INSTALLATION

Revise paragraphs below to suit Project or delete if indicated on Drawings.

A. Felt Underlayment: Install with adhesive for temporary anchorage to minimize use of mechanical fasteners under roof specialties. Apply in shingle fashion to shed water, with lapped joints of not less than 2 inches (50 mm).

B. Self-Adhering Sheet Underlayment: Install wrinkle free. Apply primer if required by underlayment manufacturer. Comply with temperature restrictions of underlayment manufacturer for installation; use primer rather than nails for installing underlayment at low temperatures. Apply in shingle fashion to shed water. Overlap edges not less than 3-1/2 inches (90 mm). Roll laps with roller. Cover underlayment within 14 days.

C. Polyethylene Sheet: Install with adhesive for temporary anchorage to minimize use of mechanical fasteners under roof specialties. Apply in shingle fashion to shed water, with lapped and taped joints of not less than 2 inches (50 mm).

D. Slip Sheet: Install with tape or adhesive for temporary anchorage to minimize use of mechanical fasteners under roof specialties. Apply in shingle fashion to shed water, with lapped joints of not less than 2 inches (50 mm).

3.3 INSTALLATION, GENERAL

A. General: Install roof specialties according to manufacturer's written instructions. Anchor roof specialties securely in place, with provisions for thermal and structural movement. Use fasteners, protective coatings, separators, sealants, and other miscellaneous items as required to complete roof-specialty systems.
   1. Install roof specialties level, plumb, true to line and elevation; with limited oil-canning and without warping, jogs in alignment, buckling, or tool marks.
   2. Provide uniform, neat seams with minimum exposure of solder and sealant.
   3. Install roof specialties to fit substrates and to result in watertight performance. Verify shapes and dimensions of surfaces to be covered before manufacture.
   4. Torch cutting of roof specialties is not permitted.
   5. Do not use graphite pencils to mark metal surfaces.

B. Metal Protection: Protect metals against galvanic action by separating dissimilar metals from contact with each other or with corrosive substrates by painting contact surfaces with bituminous coating or by other permanent separation as recommended by manufacturer.
   1. Coat concealed side of aluminum roof specialties with bituminous coating where in contact with wood, ferrous metal, or cementitious construction.
   2. Underlayment: Where installing metal flashing directly on cementitious or wood substrates, install a course of felt underlayment and cover with a slip sheet, self-adhering, high-temperature sheet underlayment or polyethylene sheet.
   3. Bed flanges in thick coat of asphalt roofing cement where required by manufacturers of roof specialties for waterproof performance.

C. Expansion Provisions: Allow for thermal expansion of exposed roof specialties.
   1. Space movement joints at a maximum of 12 feet (3.6 m) with no joints within 18 inches (450 mm) of corners or intersections unless otherwise shown on Drawings.
   2. When ambient temperature at time of installation is between 40 and 70 deg F (4 and 21 deg C), set joint members for 50 percent movement each way. Adjust setting proportionately for installation at higher ambient temperatures.

D. Fastener Sizes: Use fasteners of sizes that will penetrate wood blocking or sheathing not less than 1-1/4 inches (32 mm) for nails and not less than 3/4 inch (19 mm) for wood screws and substrate not less than recommended by fastener manufacturer to achieve maximum pull-out resistance.

E. Seal joints with elastomeric or butyl sealant as required by roofing-specialty manufacturer.

F. Seal joints as required for watertight construction. Place sealant to be completely concealed in joint. Do not install sealants at temperatures below 40 deg F (4 deg C).

3.4 COPING INSTALLATION

A. Install cleats, anchor plates, and other anchoring and attachment accessories and devices with concealed fasteners.

B. Anchor copings to meet performance requirements.
   1. Interlock face and back leg drip edges of snap-on coping cap into cleated anchor plates anchored to substrate at manufacturer's required spacing that meets performance requirements .

3.5 CLEANING AND PROTECTION

A. Clean exposed metal surfaces of substances that interfere with uniform oxidation and weathering.

B. Clean and neutralize flux materials. Clean off excess sealants.

C. Remove temporary protective coverings and strippable films as roof specialties are installed. On completion of installation, clean finished surfaces including removing unused fasteners, metal filings, pop rivet stems, and pieces of flashing. Maintain roof specialties in a clean condition during construction.

D. Replace roof specialties that have been damaged or that cannot be successfully repaired by finish touchup or similar minor repair procedures.

END OF SECTION 077100

SECTION 079200 - JOINT SEALANTS

PART 1 - GENERAL

1.1 RELATED DOCUMENTS

A. Drawings and general provisions of the Contract, including General and Supplementary Conditions and Specification Sections, apply to this Section.

1.2 SUMMARY

A. Section Includes:
   1. Silicone joint sealants.

1.3 PRECONSTRUCTION TESTING

A. Preconstruction Field-Adhesion Testing: Before installing sealants, field test their adhesion to Project joint substrates as follows:
   1. Locate test joints as required to test all applicable substrate types at each building.
   2. Conduct field tests for each application indicated below:
      a. Each kind of sealant and joint substrate indicated.
   3. Notify Architect seven days in advance of dates and times when test joints will be erected.
   4. Arrange for tests to take place with joint-sealant manufacturer's technical representative present.
      a. Test Method: Test joint sealants according to Method A, Field-Applied Sealant Joint Hand Pull Tab, in Appendix X1 in ASTM C 1193.
         1) For joints with dissimilar substrates, verify adhesion to each substrate separately; extend cut along one side, verifying adhesion to opposite side. Repeat procedure for opposite side.
   5. Report whether sealant failed to adhere to joint substrates or tore cohesively. Include data on pull distance used to test each kind of product and joint substrate. For sealants that fail adhesively, retest until satisfactory adhesion is obtained.
   6. Evaluation of Preconstruction Field-Adhesion-Test Results: Sealants not evidencing adhesive failure from testing, in absence of other indications of noncompliance with requirements, will be considered satisfactory. Do not use sealants that fail to adhere to joint substrates during testing.

1.4 QUALITY ASSURANCE

A. Installer Qualifications: Manufacturer's authorized representative who is trained and approved for installation of units required for this Project.

B. Source Limitations: Obtain each kind of joint sealant from single source from single manufacturer.

C. Product Testing: Test joint sealants using a qualified testing agency.
   1. Testing Agency Qualifications: An independent testing agency qualified according to ASTM C 1021 to conduct the testing indicated.
   2. Test according to SWRI's Sealant Validation Program for compliance with requirements specified by reference to ASTM C 920 for adhesion and cohesion under cyclic movement, adhesion-in-peel, and indentation hardness.

1.5 PROJECT CONDITIONS

A. Do not proceed with installation of joint sealants under the following conditions:
   1. When ambient and substrate temperature conditions are outside limits permitted by joint-sealant manufacturer or are below 40 deg F (5 deg C).
   2. When joint substrates are wet.
   3. Where joint widths are less than those allowed by joint-sealant manufacturer for applications indicated.
   4. Where contaminants capable of interfering with adhesion have not yet been removed from joint substrates.

1.6 WARRANTY

A. Special Installer's Warranty: Manufacturer's standard form in which Installer agrees to repair or replace joint sealants that do not comply with performance and other requirements specified in this Section within specified warranty period.
   1. Warranty Period: Three years from date of Substantial Completion.

B. Special Manufacturer's Warranty: Manufacturer's standard form in which joint-sealant manufacturer agrees to furnish joint sealants to repair or replace those that do not comply with performance and other requirements specified in this Section within specified warranty period.
   1. Warranty Period: 20 years from date of Substantial Completion.

C. Special warranties specified in this article exclude deterioration or failure of joint sealants from the following:
   1. Movement of the structure caused by structural settlement or errors attributable to design or construction resulting in stresses on the sealant exceeding sealant manufacturer's written specifications for sealant elongation and compression.
   2. Disintegration of joint substrates from natural causes exceeding design specifications.
   3. Mechanical damage caused by individuals, tools, or other outside agents.
   4. Changes in sealant appearance caused by accumulation of dirt or other atmospheric contaminants.

PART 2 - PRODUCTS

2.1 MATERIALS, GENERAL

A. Compatibility: Provide joint sealants, backings, and other related materials that are compatible with one another and with joint substrates under conditions of service and application, as demonstrated by joint-sealant manufacturer, based on testing and field experience.

B. VOC Content of Interior Sealants: Provide sealants and sealant primers for use inside the weatherproofing system that comply with the following limits for VOC content when calculated according to 40 CFR 59, Part 59, Subpart D (EPA Method 24):
   1. Architectural Sealants: 250 g/L.
   2. Sealant Primers for Nonporous Substrates: 250 g/L.
   3. Sealant Primers for Porous Substrates: 775 g/L.

C. Liquid-Applied Joint Sealants: Comply with ASTM C 920 and other requirements indicated for each liquid-applied joint sealant specified, including those referencing ASTM C 920 classifications for type, grade, class, and uses related to exposure and joint substrates.

D. Stain-Test-Response Characteristics: Where sealants are specified to be nonstaining to porous substrates, provide products that have undergone testing according to ASTM C 1248 and have not stained porous joint substrates indicated for Project.

E. Colors of Exposed Joint Sealants: Match adjacent surfaces.

2.2 SILICONE JOINT SEALANTS

A. Single-Component, Nonsag, Neutral-Curing Silicone Joint Sealant: ASTM C 920, Type S, Grade NS, Class 100/50, for Use NT.

B. Single-Component, Nonsag, Traffic-Grade, Neutral-Curing Silicone Joint Sealant: ASTM C 920, Type S, Grade NS, Class 100/50, for Use T.

2.3 (Not Used)

2.4 JOINT SEALANT BACKING

A. General: Provide sealant backings of material that are nonstaining; are compatible with joint substrates, sealants, primers, and other joint fillers; and are approved for applications indicated by sealant manufacturer based on field experience and laboratory testing.

B. Cylindrical Sealant Backings: ASTM C 1330, Type C (closed-cell material with a surface skin), Type O (open-cell material), Type B (bicellular material with a surface skin) or any of the preceding types, as approved in writing by joint-sealant manufacturer for joint application indicated, and of size and density to control sealant depth and otherwise contribute to producing optimum sealant performance.

C. Bond-Breaker Tape: Polyethylene tape or other plastic tape recommended by sealant manufacturer for preventing sealant from adhering to rigid, inflexible joint-filler materials or joint surfaces at back of joint. Provide self-adhesive tape where applicable.

2.5 MISCELLANEOUS MATERIALS

A. Primer: Material recommended by joint-sealant manufacturer where required for adhesion of sealant to joint substrates indicated, as determined from preconstruction joint-sealant-substrate tests and field tests.

B. Cleaners for Nonporous Surfaces: Chemical cleaners acceptable to manufacturers of sealants and sealant backing materials, free of oily residues or other substances capable of staining or harming joint substrates and adjacent nonporous surfaces in any way, and formulated to promote optimum adhesion of sealants to joint substrates.

C. Masking Tape: Nonstaining, nonabsorbent material compatible with joint sealants and surfaces adjacent to joints.

PART 3 - EXECUTION

3.1 EXAMINATION

A. Examine joints indicated to receive joint sealants, with Installer present, for compliance with requirements for joint configuration, installation tolerances, and other conditions affecting joint-sealant performance.

B. Proceed with installation only after unsatisfactory conditions have been corrected.

3.2 PREPARATION

A. Surface Cleaning of Joints: Clean out joints immediately before installing joint sealants to comply with joint-sealant manufacturer's written instructions and the following requirements:
   1. Remove all foreign material from joint substrates that could interfere with adhesion of joint sealant, including dust, paints (except for permanent, protective coatings tested and approved for sealant adhesion and compatibility by sealant manufacturer), old joint sealants, oil, grease, waterproofing, water repellents, water, surface dirt, and frost.
   2. Clean porous joint substrate surfaces by brushing, grinding, mechanical abrading, or a combination of these methods to produce a clean, sound substrate capable of developing optimum bond with joint sealants. Remove loose particles remaining after cleaning operations above by vacuuming or blowing out joints with oil-free compressed air. Porous joint substrates include the following:
      a. Concrete.
      b. Masonry.
      c. Unglazed surfaces of ceramic tile.
      d. Exterior insulation and finish systems.
   3. Remove laitance and form-release agents from concrete.
   4. Clean nonporous joint substrate surfaces with chemical cleaners or other means that do not stain, harm substrates, or leave residues capable of interfering with adhesion of joint sealants. Nonporous joint substrates include the following:
      a. Metal.
      b. Glass.
      c. Porcelain enamel.
      d. Glazed surfaces of ceramic tile.

B. Joint Priming: Prime joint substrates where recommended by joint-sealant manufacturer or as indicated by preconstruction joint-sealant-substrate tests or prior experience. Apply primer to comply with joint-sealant manufacturer's written instructions. Confine primers to areas of joint-sealant bond; do not allow spillage or migration onto adjoining surfaces.

C. Masking Tape: Use masking tape where required to prevent contact of sealant or primer with adjoining surfaces that otherwise would be permanently stained or damaged by such contact or by cleaning methods required to remove sealant smears. Remove tape immediately after tooling without disturbing joint seal.

3.3 INSTALLATION OF JOINT SEALANTS

A. Joint Sealant Removal and Replacement:
   1. Replace all existing exterior joint sealants.

B. General: Comply with joint-sealant manufacturer's written installation instructions for products and applications indicated, unless more stringent requirements apply.

C. Sealant Installation Standard: Comply with recommendations in ASTM C 1193 for use of joint sealants as applicable to materials, applications, and conditions indicated.

D. Install sealant backings of kind indicated to support sealants during application and at position required to produce cross-sectional shapes and depths of installed sealants relative to joint widths that allow optimum sealant movement capability.
   1. Do not leave gaps between ends of sealant backings.
   2. Do not stretch, twist, puncture, or tear sealant backings.
   3. Remove absorbent sealant backings that have become wet before sealant application and replace them with dry materials.

E. Install bond-breaker tape behind sealants where sealant backings are not used between sealants and backs of joints.

F. Install sealants using proven techniques that comply with the following and at the same time backings are installed:
   1. Place sealants so they directly contact and fully wet joint substrates.
   2. Completely fill recesses in each joint configuration.
   3. Produce uniform, cross-sectional shapes and depths relative to joint widths that allow optimum sealant movement capability.

G. Tooling of Nonsag Sealants: Immediately after sealant application and before skinning or curing begins, tool sealants according to requirements specified in subparagraphs below to form smooth, uniform beads of configuration indicated; to eliminate air pockets; and to ensure contact and adhesion of sealant with sides of joint.
   1. Remove excess sealant from surfaces adjacent to joints.
   2. Use tooling agents that are approved in writing by sealant manufacturer and that do not discolor sealants or adjacent surfaces.
   3. Provide concave joint profile per Figure 8A in ASTM C 1193, unless otherwise indicated.

3.4 FIELD QUALITY CONTROL

A. Field-Adhesion Testing: Field test joint-sealant adhesion to joint substrates as follows:
   1. Extent of Testing: Test completed and cured sealant joints as follows:
      a. Perform 10 tests for the first 1000 feet (300 m) of joint length per building for each kind of sealant and joint substrate.
      b. Perform 1 test for each 1000 feet (300 m) of joint length per building thereafter or 1 test per each floor per elevation.
   2. Test Method: Test joint sealants according to Method A, Field-Applied Sealant Joint Hand Pull Tab, in Appendix X1 in ASTM C 1193.
      a. For joints with dissimilar substrates, verify adhesion to each substrate separately; extend cut along one side, verifying adhesion to opposite side. Repeat procedure for opposite side.
   3. Inspect tested joints and report on the following:
      a. Whether sealants filled joint cavities and are free of voids.
      b. Whether sealant dimensions and configurations comply with specified requirements.
      c. Whether sealants in joints connected to pulled-out portion failed to adhere to joint substrates or tore cohesively. Include data on pull distance used to test each kind of product and joint substrate. Compare these results to determine if adhesion passes sealant manufacturer's field-adhesion hand-pull test criteria.
   4. Record test results in a field-adhesion-test log. Include dates when sealants were installed, names of persons who installed sealants, test dates, test locations, whether joints were primed, adhesion results and percent elongations, sealant fill, sealant configuration, and sealant dimensions.
   5. Repair sealants pulled from test area by applying new sealants following same procedures used originally to seal joints. Ensure that original sealant surfaces are clean and that new sealant contacts original sealant.

B. Evaluation of Field-Adhesion Test Results: Sealants not evidencing adhesive failure from testing or noncompliance with other indicated requirements will be considered satisfactory. Remove sealants that fail to adhere to joint substrates during testing or to comply with other requirements. Retest failed applications until test results prove sealants comply with indicated requirements.

3.5 CLEANING

A. Clean off excess sealant or sealant smears adjacent to joints as the Work progresses by methods and with cleaning materials approved in writing by manufacturers of joint sealants and of products in which joints occur.

3.6 PROTECTION

A. Protect joint sealants during and after curing period from contact with contaminating substances and from damage resulting from construction operations or other causes so sealants are without deterioration or damage at time of Substantial Completion. If, despite such protection, damage or deterioration occurs, cut out and remove damaged or deteriorated joint sealants immediately so installations with repaired areas are indistinguishable from original work.

3.7 JOINT-SEALANT SCHEDULE

A. Joint-Sealant Application: Exterior joints in vertical surfaces and horizontal nontraffic surfaces
   1. Joint Locations:
      a. All exterior joints.
   2. Silicone Joint Sealant: Single component, nonsag, neutral curing, Class 100/50
   3. Joint-Sealant Color: Match adjacent surfaces.

END OF SECTION 079200

SECTION 084113 - ALUMINUM-FRAMED ENTRANCES AND STOREFRONTS

PART 1 - GENERAL

1.1 RELATED DOCUMENTS

A. Drawings and general provisions of the Contract, including General and Supplementary Conditions and Specification Sections, apply to this Section.

1.2 SUMMARY

A. Section Includes:
   1. Exterior and interior storefront framing.
   2. Exterior and interior manual-swing entrance doors.

1.3 DEFINITIONS

A. ADA/ABA Accessibility Guidelines: U.S. Architectural & Transportation Barriers Compliance Board's "Americans with Disability Act (ADA) and Architectural Barriers Act (ABA) Accessibility Guidelines for Buildings and Facilities."

1.4 PERFORMANCE REQUIREMENTS

A. General Performance: Aluminum-framed systems shall withstand the effects of the following performance requirements without exceeding performance criteria or failure due to defective manufacture, fabrication, installation, or other defects in construction:
   1. Movements of supporting structure indicated on Drawings including, but not limited to, story drift and deflection from uniformly distributed and concentrated live loads.
   2. Dimensional tolerances of building frame and other adjacent construction.
   3. Failure includes the following:
      a. Deflection exceeding specified limits.
      b. Thermal stresses transferring to building structure.
      c. Framing members transferring stresses, including those caused by thermal and structural movements to glazing.
      d. Noise or vibration created by wind and by thermal and structural movements.
      e. Loosening or weakening of fasteners, attachments, and other components.
      f. Sealant failure.
      g. Failure of operating units.

B. Delegated Design: Design aluminum-framed systems, including comprehensive engineering analysis by a qualified professional engineer, using performance requirements and design criteria indicated.

C. Structural Loads:
   1. Wind Loads: As required by the Ohio Building Code.

(CONTINUED NEXT SHEET)

BRIDGE POINTE RETAIL CENTER IMPROVEMENTS

NEYER PROPERTIES

6400 - 6550 Riverside Drive
Dublin, Ohio 43017

COMMISSION NUMBER: 1205

TRIAD ARCHITECTS
936 Eastwind Drive, Suite 202
Columbus, Ohio 43081
Phone: (614) 942-1050
Fax: (614) 942-1059
main@triadarchitects.com

DATE:
9/25/2012 - PERMIT SET

SEAL:
STATE OF OHIO
BRENT T. FOLEY
14892
REGISTERED ARCHITECT

BRENT T. FOLEY, LIC. 14892
EXP: DEC 31, 2012

SPECIFICATIONS

DRAWN BY: AML
CHECKED BY: BTF/ZP

A0.7

P:\Pro-12\1205-Equity Bridge Pointe\100-Cad\20 Current Drawings\1205-Bridge Pointe-Sheet Specifications.dwg, 9/25/2012 10:28:18 AM

D. Deflection of Framing Members:

1. Deflection Normal to Wall Plane: Limited to edge of glass in a direction perpendicular to glass plane shall not exceed L/175 of the glass edge length for each individual glazing lite or an amount that restricts edge deflection of individual glazing lites to 3/4 inch (19 mm), whichever is less.

2. Deflection Parallel to Glazing Plane: Limited to amount not exceeding that which reduces glazing bite to less than 75 percent of design dimension and that which reduces edge clearance between framing members and glazing or other fixed components directly below them to less than 1/8 inch (3.2 mm) and clearance between members and operable units directly below them to less than 1/16 inch (1.5 mm).

E. Structural-Test Performance: Provide aluminum-framed systems tested according to ASTM E 330 as follows:

1. When tested at positive and negative wind-load design pressures, systems do not evidence deflection exceeding specified limits.

2. When tested at 150 percent of positive and negative wind-load design pressures, systems, including anchorage, do not evidence material failures, structural distress, and permanent deformation of main framing members exceeding 0.2 percent of span.

3. Test Durations: As required by design wind velocity, but not fewer than 10 seconds.

F. Air Infiltration: Provide aluminum-framed systems with maximum air leakage through fixed glazing and framing areas of 0.06 cfm/sq. ft. (0.03 L/s per sq. m) of fixed wall area when tested according to ASTM E 283 at a minimum static-air-pressure difference of 6.24 lbf/sq. ft. (300 Pa).

G. Water Penetration under Static Pressure: Provide aluminum-framed systems that do not evidence water penetration through fixed glazing and framing areas when tested according to ASTM E 331 at a minimum static-air-pressure difference of 20 percent of positive wind-load design pressure, but not less than 6.24 lbf/sq. ft. (300 Pa).

1. Maximum Water Leakage: No uncontrolled water penetrating aluminum-framed systems or water appearing on systems' normally exposed interior surfaces from sources other than condensation. Water leakage does not include water controlled by flashing and gutters that is drained to exterior and water that cannot damage adjacent materials or finishes.

H. Thermal Movements: Provide aluminum-framed systems that allow for thermal movements resulting from the following maximum change (range) in ambient and surface temperatures. Base engineering calculation on surface temperatures of materials due to both solar heat gain and nighttime-sky heat loss.

1. Temperature Change (Range): 120 deg F (67 deg C), ambient; 180 deg F (100 deg C), material surfaces.

2. Test Performance: No buckling; stress on glass; sealant failure; excess stress on framing, anchors, and fasteners; or reduction of performance when tested according to AAMA 501.5.
   a. High Exterior Ambient-Air Temperature: That which produces an exterior metal-surface temperature of 180 deg F (82 deg C).
   b. Low Exterior Ambient-Air Temperature: 0 deg F (minus 18 deg C).

3. Interior Ambient-Air Temperature: 75 deg F (24 deg C).

I. Condensation Resistance: Provide aluminum-framed systems with fixed glazing and framing areas having condensation-resistance factor (CRF) of not less than 53when tested according to AAMA 1503.

J. Thermal Conductance: Provide aluminum-framed systems with fixed glazing and framing areas having an average U-factor of not more than 0.58 Btu/sq. ft. x h x deg F (3.23 W/sq. m x K) when tested according to AAMA 1503.

1.5 SUBMITTALS - (Not Used)

1.6 QUALITY ASSURANCE

A. Installer Qualifications: Manufacturer's authorized representative who is trained and approved for installation of units required for this Project.

B. Engineering Responsibility: Prepare data for aluminum-framed systems, including Shop Drawings, based on testing and engineering analysis of manufacturer's standard units in systems similar to those indicated for this Project.

C. Product Options: Information on Drawings and in Specifications establishes requirements for systems' aesthetic effects and performance characteristics. Aesthetic effects are indicated by dimensions, arrangements, alignment, and profiles of components and assemblies as they relate to sightlines, to one another, and to adjoining construction. Performance characteristics are indicated by criteria subject to verification by one or more methods including preconstruction testing, field testing, and in-service performance.

1. Do not revise intended aesthetic effects, as judged solely by Architect, except with Architect's approval. If revisions are proposed, submit comprehensive explanatory data to Architect for review.

D. Accessible Entrances: Comply with applicable provisions in the U.S. Architectural & Transportation Barriers Compliance Board's ADA-ABA Accessibility Guidelines .

E. Source Limitations for Aluminum-Framed Systems: Obtain from single source from single manufacturer.

1.7 PROJECT CONDITIONS

A. Field Measurements: Verify actual locations of structural supports for aluminum-framed systems by field measurements before fabrication and indicate measurements on Shop Drawings.

1.8 WARRANTY

A. Special Warranty: Manufacturer's standard form in which manufacturer agrees to repair or replace components of aluminum-framed systems that do not comply with requirements or that fail in materials or workmanship within specified warranty period.

1. Failures include, but are not limited to, the following:
   a. Structural failures including, but not limited to, excessive deflection.
   b. Noise or vibration caused by thermal movements.
   c. Deterioration of metals and other materials beyond normal weathering.
   d. Water leakage through fixed glazing and framing areas.
   e. Failure of operating components.

2. Warranty Period: Two years from date of Substantial Completion.

B. Special Finish Warranty: Manufacturer's standard form in which manufacturer agrees to repair or replace components on which finishes do not comply with requirements or that fail in materials or workmanship within specified warranty period. Warranty does not include normal weathering.

1. Warranty Period: 20 years from date of Substantial Completion.

PART 2 - PRODUCTS

2.1 MANUFACTURERS - (Not Used)

2.2 MATERIALS

A. Aluminum: Alloy and temper recommended by manufacturer for type of use and finish indicated.

1. Sheet and Plate: ASTM B 209 (ASTM B 209M).

2. Extruded Bars, Rods, Profiles, and Tubes: ASTM B 221 (ASTM B 221M).

3. Extruded Structural Pipe and Tubes: ASTM B 429.

4. Structural Profiles: ASTM B 308/B 308M.

5. Welding Rods and Bare Electrodes: AWS A5.10/A5.10M.

B. Steel Reinforcement: Manufacturer's standard zinc-rich, corrosion-resistant primer, complying with SSPC-PS Guide No. 12.00; applied immediately after surface preparation and pretreatment. Select surface preparation methods according to recommendations in SSPC-SP COM and prepare surfaces according to applicable SSPC standard.

1. Structural Shapes, Plates, and Bars: ASTM A 36/A 36M.

2. Cold-Rolled Sheet and Strip: ASTM A 1008/A 1008M.

3. Hot-Rolled Sheet and Strip: ASTM A 1011/A 1011M.

2.3 EXTERIOR FRAMING SYSTEMS

A. Framing Members: Manufacturer's standard extruded-aluminum framing members of thickness required and reinforced as required to support imposed loads.

1. Construction: Thermally broken.

2. Glazing System: Retained mechanically with gaskets on four sides.

3. Glazing Plane: Center.

B. Brackets and Reinforcements: Manufacturer's standard high-strength aluminum with nonstaining, nonferrous shims for aligning system components.

C. Fasteners and Accessories: Manufacturer's standard corrosion-resistant, nonstaining, nonbleeding fasteners and accessories compatible with adjacent materials.

1. Use self-locking devices where fasteners are subject to loosening or turning out from thermal and structural movements, wind loads, or vibration.

2. Reinforce members as required to receive fastener threads.

3. Use exposed fasteners with countersunk Phillips screw heads, finished to match framing system .

D. Concrete and Masonry Inserts: Hot-dip galvanized cast-iron, malleable-iron, or steel inserts, complying with ASTM A 123/A 123M or ASTM A 153/A 153M.

E. Concealed Flashing: Manufacturer's standard corrosion-resistant, nonstaining, nonbleeding flashing compatible with adjacent materials .

F. Framing System Gaskets and Sealants: Manufacturer's standard, recommended by manufacturer for joint type.

1. Provide sealants for use inside of the weatherproofing system that have a VOC content of 250 g/L or less when calculated according to 40 CFR 59, Subpart D (EPA Method 24).

2.4 (Not Used)

2.5 GLAZING SYSTEMS

A. Glazing: As specified in Division 08 Section "Glazing."

B. Glazing Gaskets: Manufacturer's standard compression types; replaceable, molded or extruded, of profile and hardness required to maintain watertight seal.

C. Spacers and Setting Blocks: Manufacturer's standard elastomeric type.

2.6 EXTERIOR ENTRANCE DOOR SYSTEMS

A. Entrance Doors: Manufacturer's standard glazed entrance doors for manual-swing operation.

1. Door Construction: 2- to 2-1/4-inch (50.8- to 57.2-mm) overall thickness, with minimum 0.125-inch-(3.2-mm-) thick, extruded-aluminum tubular rail and stile members. Mechanically fasten corners with reinforcing brackets that are deeply penetrated and fillet welded or that incorporate concealed tie rods.
   a. Thermal Construction: High-performance plastic connectors separate aluminum members exposed to the exterior from members exposed to the interior.

2. Door Design: Wide stile; 5-inch (127-mm) nominal width.

3. Glazing Stops and Gaskets: Beveled or Square , snap-on, extruded-aluminum stops and preformed gaskets.
   a. Provide nonremovable glazing stops on outside of door.

B. Entrance Door Hardware: Manufacturer's standard hardware.

2.7 (Not Used)

2.8 (Not Used)

2.9 ACCESSORY MATERIALS

A. Joint Sealants: For installation at perimeter of aluminum-framed systems, as specified in Division 07 Section "Joint Sealants."

1. Provide sealants for use inside of the weatherproofing system that have a VOC content of 250 g/L or less when calculated according to 40 CFR 59, Subpart D (EPA Method 24).

B. Bituminous Paint: Cold-applied, asphalt-mastic paint complying with SSPC-Paint 12 requirements except containing no asbestos; formulated for 30-mil (0.762-mm) thickness per coat.

2.10 FABRICATION

A. Form or extrude aluminum shapes before finishing.

B. Weld in concealed locations to greatest extent possible to minimize distortion or discoloration of finish. Remove weld spatter and welding oxides from exposed surfaces by descaling or grinding.

C. Framing Members, General: Fabricate components that, when assembled, have the following characteristics:

1. Profiles that are sharp, straight, and free of defects or deformations.

2. Accurately fitted joints with ends coped or mitered.

3. Means to drain water passing joints, condensation within framing members, and moisture migrating within the system to exterior.

4. Physical and thermal isolation of glazing from framing members.

5. Accommodations for thermal and mechanical movements of glazing and framing to maintain required glazing edge clearances.

6. Provisions for field replacement of glazing from interior .

7. Fasteners, anchors, and connection devices that are concealed from view to greatest extent possible.

D. Mechanically Glazed Framing Members: Fabricate for flush glazing without projecting stops.

E. Structural-Sealant-Glazed Framing Members: Include accommodations for using temporary support device to retain glazing in place while structural sealant cures.

F. Storefront Framing: Fabricate components for assembly using head-and-sill-receptor system with shear blocks at intermediate horizontal members .

G. Entrance Door Frames: Reinforce as required to support loads imposed by door operation and for installing entrance door hardware.

1. At exterior doors, provide compression weather stripping at fixed stops.

2. At interior doors, provide silencers at stops to prevent metal-to-metal contact. Install three silencers on strike jamb of single-door frames and two silencers on head of frames for pairs of doors.

H. Entrance Doors: Reinforce doors as required for installing entrance door hardware.

1. At pairs of exterior doors, provide sliding-type weather stripping retained in adjustable strip and mortised into door edge.

2. At exterior doors, provide weather sweeps applied to door bottoms.

I. Entrance Door Hardware Installation: Factory install entrance door hardware to the greatest extent possible. Cut, drill, and tap for factory-installed entrance door hardware before applying finishes.

J. After fabrication, clearly mark components to identify their locations in Project according to Shop Drawings.

2.11 ALUMINUM FINISHES

A. High-Performance Organic Finish: 2-coat fluoropolymer finish complying with AAMA 2605 and containing not less than 70 percent PVDF resin by weight in color coat. Prepare, pretreat, and apply coating to exposed metal surfaces to comply with coating and resin manufacturers' written instructions.

1. Color and Gloss: As selected by Owner from manufacturer's full range of custom and standard options.

PART 3 - EXECUTION

3.1 EXAMINATION

A. Examine areas and conditions, with Installer present, for compliance with requirements for installation tolerances and other conditions affecting performance of the Work.

B. Proceed with installation only after unsatisfactory conditions have been corrected.

3.2 INSTALLATION

A. General:

1. Comply with manufacturer's written instructions.

2. Do not install damaged components.

3. Fit joints to produce hairline joints free of burrs and distortion.

4. Rigidly secure nonmovement joints.

5. Install anchors with separators and isolators to prevent metal corrosion and electrolytic deterioration.

6. Seal joints watertight unless otherwise indicated.

B. Metal Protection:

1. Where aluminum will contact dissimilar metals, protect against galvanic action by painting contact surfaces with primer or applying sealant or tape, or by installing nonconductive spacers as recommended by manufacturer for this purpose.

2. Where aluminum will contact concrete or masonry, protect against corrosion by painting contact surfaces with bituminous paint.

C. Install components to drain water passing joints, condensation occurring within framing members, and moisture migrating within the system to exterior.

D. Set continuous sill members and flashing in full sealant bed as specified in Division 07 Section "Joint Sealants" to produce weathertight installation.

E. Install components plumb and true in alignment with established lines and grades, and without warp or rack.

F. Install glazing as specified in Division 08 Section "Glazing."

G. Entrance Doors: Install doors to produce smooth operation and tight fit at contact points.

1. Exterior Doors: Install to produce weathertight enclosure and tight fit at weather stripping.

2. Field-Installed Entrance Door Hardware: Install surface-mounted entrance door hardware according to entrance door hardware manufacturers' written instructions using concealed fasteners to greatest extent possible.

H. Install perimeter joint sealants as specified in Division 07 Section "Joint Sealants" to produce weathertight installation.

3.3 ERECTION TOLERANCES

A. Install aluminum-framed systems to comply with the following maximum erection tolerances:

1. Location and Plane: Limit variation from true location and plane to 1/8 inch in 12 feet (3 mm in 3.7 m); 1/4 inch (6 mm) over total length.

2. Alignment:
   a. Where surfaces abut in line, limit offset from true alignment to 1/16 inch (1.5 mm).
   b. Where surfaces meet at corners, limit offset from true alignment to 1/32 inch (0.8 mm).

B. Diagonal Measurements: Limit difference between diagonal measurements to 1/8 inch (3 mm).

3.4 ADJUSTING

A. Adjust operating entrance door hardware to function smoothly as recommended by manufacturer.

1. For entrance doors accessible to people with disabilities, adjust closers to provide a 3-second closer sweep period for doors to move from a 70-degree open position to 3 inches (75 mm) from the latch, measured to the leading door edge.

END OF SECTION 084113

SECTION 088000 - GLAZING

PART 1 - GENERAL

1.1 RELATED DOCUMENTS

A. Drawings and general provisions of the Contract, including General and Supplementary Conditions and Specification Sections, apply to this Section.

1.2 SUMMARY

A. Section includes glazing for the following products and applications, including those specified in other Sections where glazing requirements are specified by reference to this Section:

1. Doors.

2. Storefront framing.

1.3 DEFINITIONS

A. Glass Manufacturers: Firms that produce primary glass, fabricated glass, or both, as defined in referenced glazing publications.

B. Glass Thicknesses: Indicated by thickness designations in millimeters according to ASTM C 1036.

C. Interspace: Space between lites of an insulating-glass unit.

1.4 PERFORMANCE REQUIREMENTS

A. General: Installed glazing systems shall withstand normal thermal movement and wind and impact loads (where applicable) without failure, including loss or glass breakage attributable to the following: defective manufacture, fabrication, or installation; failure of sealants or gaskets to remain watertight and airtight; deterioration of glazing materials; or other defects in construction.

B. Thermal Movements: Allow for thermal movements from ambient and surface temperature changes acting on glass framing members and glazing components.

1. Temperature Change: 120 deg F (67 deg C), ambient; 180 deg F (100 deg C), material surfaces.

1.5 SUBMITTALS - (Not Used)

1.6 QUALITY ASSURANCE

A. Manufacturer Qualifications for Insulating-Glass Units with Sputter-Coated, Low-E Coatings: A qualified insulating-glass manufacturer who is approved and certified by coated-glass manufacturer.

B. Installer Qualifications: A qualified installer who employs glass installers for this Project who are certified under the National Glass Association's Certified Glass Installer Program.

C. Source Limitations for Glass: Obtain coated float glass and insulating glass from single source from single manufacturer for each glass type.

D. Source Limitations for Glazing Accessories: Obtain from single source from single manufacturer for each product and installation method.

E. Glazing Publications: Comply with published recommendations of glass product manufacturers and organizations below, unless more stringent requirements are indicated. Refer to these publications for glazing terms not otherwise defined in this Section or in referenced standards.

1. IGMA Publication for Insulating Glass: SIGMA TM-3000, "North American Glazing Guidelines for Sealed Insulating Glass Units for Commercial and Residential Use."

F. Insulating-Glass Certification Program: Permanently marked either on spacers or on at least one component lite of units with appropriate certification label of IGCC.

1.7 DELIVERY, STORAGE, AND HANDLING

A. Protect glazing materials according to manufacturer's written instructions. Prevent damage to glass and glazing materials from condensation, temperature changes, direct exposure to sun, or other causes.

B. Comply with insulating-glass manufacturer's written recommendations for venting and sealing units to avoid hermetic seal ruptures due to altitude change.

1.8 PROJECT CONDITIONS

A. Environmental Limitations: Do not proceed with glazing when ambient and substrate temperature conditions are outside limits permitted by glazing material manufacturers and when glazing channel substrates are wet from rain, frost, condensation, or other causes.

1. Do not install glazing sealants when ambient and substrate temperature conditions are outside limits permitted by sealant manufacturer or below 40 deg F (4.4 deg C).

1.9 WARRANTY

A. Manufacturer's Special Warranty for Coated-Glass Products: Manufacturer's standard form in which coated-glass manufacturer agrees to replace coated-glass units that deteriorate within specified warranty period. Deterioration of coated glass is defined as defects developed from normal use that are not attributed to glass breakage or to maintaining and cleaning coated glass contrary to manufacturer's written instructions. Defects include peeling, cracking, and other indications of deterioration in coating.

1. Warranty Period: 10 years from date of Substantial Completion.

B. Manufacturer's Special Warranty on Insulating Glass: Manufacturer's standard form in which insulating-glass manufacturer agrees to replace insulating-glass units that deteriorate within specified warranty period. Deterioration of insulating glass is defined as failure of hermetic seal under normal use that is not attributed to glass breakage or to maintaining and cleaning insulating glass contrary to manufacturer's written instructions. Evidence of failure is the obstruction of vision by dust, moisture, or film on interior surfaces of glass.

1. Warranty Period: 10 years from date of Substantial Completion.

PART 2 - PRODUCTS

2.1 GLASS PRODUCTS, GENERAL

A. Thickness: Where glass thickness is indicated, it is a minimum. Provide glass lites in thicknesses as needed to comply with requirements indicated.

1. Minimum Glass Thickness for Exterior Lites: Not less than 6.0 mm.

B. Strength: Where float glass is indicated, provide annealed float glass, Kind HS heat-treated float glass, or Kind FT heat-treated float glass as needed to comply with "Performance Requirements" Article. Where heat-strengthened glass is indicated, provide Kind HS heat-treated float glass or Kind FT heat-treated float glass as needed to comply with "Performance Requirements" Article. Where fully tempered glass is indicated, provide Kind FT heat-treated float glass.

C. Thermal and Optical Performance Properties: Provide glass with performance properties specified, as indicated in manufacturer's published test data, based on procedures indicated below:

1. For monolithic-glass lites, properties are based on units with lites 6.0 mm thick .

2. For insulating-glass units, properties are based on units of thickness indicated for overall unit and for each lite.

3. U-Factors: Center-of-glazing values, according to NFRC 100 and based on LBL's WINDOW 5.2 computer program, expressed as Btu/sq. ft. x h x deg F (W/sq. m x K).

4. Solar Heat-Gain Coefficient and Visible Transmittance: Center-of-glazing values, according to NFRC 200 and based on LBL's WINDOW 5.2 computer program.

2.2 GLASS PRODUCTS

A. Float Glass: ASTM C 1036, Type I, Quality-Q3, Class I (clear) unless otherwise indicated.

B. Heat-Treated Float Glass: ASTM C 1048; Type I; Quality-Q3; Class I (clear) unless otherwise indicated; of kind and condition indicated.

1. For uncoated glass, comply with requirements for Condition A.

2. For coated vision glass, comply with requirements for Condition C (other coated glass).

2.3 INSULATING GLASS

A. Insulating-Glass Units: Factory-assembled units consisting of sealed lites of glass separated by a dehydrated interspace, qualified according to ASTM E 2190, and complying with other requirements specified.

1. Sealing System: Dual seal, with manufacturer's standard primary and secondary.

2. Spacer: Manufacturer's standard Nonmetallic Warm Edge spacer material and construction.

3. Desiccant: Manufactures standard.

B. Glass: Comply with applicable requirements in "Glass Products" Article as indicated by designations in "Insulating-Glass Types" Article.

2.4 GLAZING GASKETS

A. Dense Compression Gaskets: Molded or extruded gaskets of profile and hardness required to maintain watertight seal, made from one of the following:

1. Neoprene complying with ASTM C 864.

2. EPDM complying with ASTM C 864.

3. Silicone complying with ASTM C 1115.

4. Thermoplastic polyolefin rubber complying with ASTM C 1115.

B. Soft Compression Gaskets: Extruded or molded, closed-cell, integral-skinned EPDM, silicone or thermoplastic polyolefin rubber gaskets complying with ASTM C 509, Type II, black; of profile and hardness required to maintain watertight seal.

1. Application: Use where soft compression gaskets will be compressed by inserting dense compression gaskets on opposite side of glazing or pressure applied by means of pressure-glazing stops on opposite side of glazing.

C. Lock-Strip Gaskets: Neoprene extrusions in size and shape indicated, fabricated into frames with molded corner units and zipper lock-strips, complying with ASTM C 542, black.

2.5 MISCELLANEOUS GLAZING MATERIALS

A. General: Provide products of material, size, and shape complying with referenced glazing standard, requirements of manufacturers of glass and other glazing materials for application indicated, and with a proven record of compatibility with surfaces contacted in installation.

B. Cleaners, Primers, and Sealers: Types recommended by sealant or gasket manufacturer.

C. Setting Blocks: Elastomeric material with a Shore, Type A durometer hardness of 85, plus or minus 5.

D. Spacers: Elastomeric blocks or continuous extrusions of hardness required by glass manufacturer to maintain glass lites in place for installation indicated.

E. Edge Blocks: Elastomeric material of hardness needed to limit glass lateral movement (side walking).

2.6 FABRICATION OF GLAZING UNITS

A. Fabricate glazing units in sizes required to fit openings indicated for Project, with edge and face clearances, edge and surface conditions, and bite complying with written instructions of product manufacturer and referenced glazing publications, to comply with system performance requirements.

2.7 MONOLITHIC-GLASS TYPES

A. Glass Type: Clear float glass or fully tempered float glass where safety glazing is indicated.

1. Thickness: 6.0 mm.

2. Provide safety glazing labeling.

2.8 INSULATING-GLASS TYPES

A. Glass Type: Low-e-coated, clear insulating glass.

1. Overall Unit Thickness: 1 inch (25 mm).

2. Thickness of Each Glass Lite: 6.0 mm.

3. Outdoor Lite: Float glass or Fully tempered float glass where safety glazing is indicated.

4. Interspace Content: Argon.

5. Indoor Lite: Float glass or Fully tempered float glass where safety glazing is indicated.

6. Low-E Coating: Sputtered on second or third surface.

7. Winter Nighttime U-Factor: .29 maximum.

8. Summer Daytime U-Factor: .29 maximum.

9. Solar Heat Gain Coefficient: .040 maximum.

10. Provide safety glazing labeling.

PART 3 - EXECUTION

3.1 EXAMINATION

A. Examine framing, glazing channels, and stops, with Installer present, for compliance with the following:

1. Manufacturing and installation tolerances, including those for size, squareness and offsets at corners.

2. Presence and functioning of weep systems.

3. Minimum required face and edge clearances.

4. Effective sealing between joints of glass-framing members.

B. Proceed with installation only after unsatisfactory conditions have been corrected.

3.2 PREPARATION

A. Clean glazing channels and other framing members receiving glass immediately before glazing. Remove coatings not firmly bonded to substrates.

B. Examine glazing units to locate exterior and interior surfaces. Label or mark units as needed so that exterior and interior surfaces are readily identifiable. Do not use materials that will leave visible marks in the completed work.

3.3 GLAZING, GENERAL

A. Comply with combined written instructions of manufacturers of glass, sealants, gaskets, and other glazing materials, unless more stringent requirements are indicated, including those in referenced glazing publications.

B. Adjust glazing channel dimensions as required by Project conditions during installation to provide necessary bite on glass, minimum edge and face clearances, and adequate sealant thicknesses, with reasonable tolerances.

C. Protect glass edges from damage during handling and installation. Remove damaged glass from Project site and legally dispose of off Project site. Damaged glass is glass with edge damage or other imperfections that, when installed, could weaken glass and impair performance and appearance.

D. Install setting blocks in sill rabbets, sized and located to comply with referenced glazing publications, unless otherwise required by glass manufacturer. Set blocks in thin course of compatible sealant suitable for heel bead.

E. Do not exceed edge pressures stipulated by glass manufacturers for installing glass lites.

F. Provide spacers for glass lites where length plus width is larger than 50 inches (1270 mm).

1. Locate spacers directly opposite each other on both inside and outside faces of glass. Install correct size and spacing to preserve required face clearances, unless gaskets and glazing tapes are used that have demonstrated ability to maintain required face clearances and to comply with system performance requirements.

2. Provide 1/8-inch (3-mm) minimum bite of spacers on glass and use thickness equal to sealant width. With glazing tape, use thickness slightly less than final compressed thickness of tape.

G. Provide edge blocking where indicated or needed to prevent glass lites from moving sideways in glazing channel, as recommended in writing by glass manufacturer and according to requirements in referenced glazing publications.

H. Set glass lites in each series with uniform pattern, draw, bow, and similar characteristics.

I. Set glass lites with proper orientation so that coatings face exterior or interior as specified.

J. Where wedge-shaped gaskets are driven into one side of channel to pressurize sealant or gasket on opposite side, provide adequate anchorage so gasket cannot walk out when installation is subjected to movement.

K. Square cut wedge-shaped gaskets at corners and install gaskets in a manner recommended by gasket manufacturer to prevent corners from pulling away; seal corner joints and butt joints with sealant recommended by gasket manufacturer.

3.4 GASKET GLAZING (DRY)

A. Cut compression gaskets to lengths recommended by gasket manufacturer to fit openings exactly, with allowance for stretch during installation.

B. Insert soft compression gasket between glass and frame or fixed stop so it is securely in place with joints miter cut and bonded together at corners.

C. Installation with Drive-in Wedge Gaskets: Center glass lites in openings on setting blocks and press firmly against soft compression gasket by inserting dense compression gaskets formed and installed to lock in place against faces of removable stops. Start gasket applications at corners and work toward centers of openings. Compress gaskets to produce a weathertight seal without developing bending stresses in glass. Seal gasket joints with sealant recommended by gasket manufacturer.

D. Installation with Pressure-Glazing Stops: Center glass lites in openings on setting blocks and press firmly against soft compression gasket. Install dense compression gaskets and pressure-glazing stops, applying pressure uniformly to compression gaskets. Compress gaskets to produce a weathertight seal without developing bending stresses in glass. Seal gasket joints with sealant recommended by gasket manufacturer.

E. Install gaskets so they protrude past face of glazing stops.

3.5 LOCK-STRIP GASKET GLAZING

A. Comply with ASTM C 716 and gasket manufacturer's written instructions. Provide supplementary wet seal and weep system unless otherwise indicated.

3.6 CLEANING AND PROTECTION

A. Protect exterior glass from damage immediately after installation by attaching crossed streamers to framing held away from glass. Do not apply markers to glass surface. Remove nonpermanent labels and clean surfaces.

B. Protect glass from contact with contaminating substances resulting from construction operations. If, despite such protection, contaminating substances do come into contact with glass, remove substances immediately as recommended in writing by glass manufacturer.

C. Examine glass surfaces adjacent to or below exterior concrete and other masonry surfaces at frequent intervals during construction, but not less than once a month, for buildup of dirt, scum, alkaline deposits, or stains; remove as recommended in writing by glass manufacturer.

D. Remove and replace glass that is broken, chipped, cracked, or abraded or that is damaged from natural causes, accidents, and vandalism, during construction period.

E. Wash glass on both exposed surfaces in each area of Project not more than four days before date scheduled for inspections that establish date of Substantial Completion. Wash glass as recommended in writing by glass manufacturer.

END OF SECTION 088000

SECTION 099100 - PAINTING

PART 1 - GENERAL

1.1 RELATED DOCUMENTS

A. Drawings and general provisions of the Contract, including General and Supplementary Conditions and Specification Sections, apply to this Section.

1.2 SUMMARY

A. Section includes surface preparation and the application of paint systems on the following substrates:

1. Concrete.

2. Clay masonry.

3. Concrete masonry units (CMU).

4. Steel.

5. Galvanized metal.

6. Aluminum (not anodized or otherwise coated).

7. Wood.

8. Plastic trim fabrications.

9. Gypsum Plaster.

10. Portland cement plaster (stucco).

11. Gypsum board.

B. Section includes surface preparation and the application of paint systems on the following:

1. All exposed, newly installed, unfinished materials/items.

2. Exposed, existing materials/items where designated.
   a. Exposed, existing unfinished materials/items located within an existing surface that is designated for painting.

3. All exposed, existing and/or newly installed materials/items where required by patching due to cutting and/or selective demolition.

1.3 DEFINITIONS

A. Gloss Level 1: Not more than 5 units at 60 degrees and 10 units at 85 degrees, according to ASTM D 523.

B. Gloss Level 3: 10 to 25 units at 60 degrees and 10 to 35 units at 85 degrees, according to ASTM D 523.

C. Gloss Level 4: 20 to 35 units at 60 degrees and not less than 35 units at 85 degrees, according to ASTM D 523.

D. Gloss Level 5: 35 to 70 units at 60 degrees, according to ASTM D 523.

E. Gloss Level 6: 70 to 85 units at 60 degrees, according to ASTM D 523.

F. Gloss Level 7: More than 85 units at 60 degrees, according to ASTM D 523.

1.4 DELIVERY, STORAGE, AND HANDLING

A. Store materials not in use in tightly covered containers in well-ventilated areas with ambient temperatures continuously maintained at not less than 45 deg F (7 deg C).

1. Maintain containers in clean condition, free of foreign materials and residue.

2. Remove rags and waste from storage areas daily.

1.5 FIELD CONDITIONS

A. Apply paints only when temperature of surfaces to be painted and ambient air temperatures are between 50 and 95 deg F (10 and 35 deg C).

B. Do not apply paints in snow, rain, fog, or mist; when relative humidity exceeds 85 percent; at temperatures less than 5 deg F (3 deg C) above the dew point; or to damp or wet surfaces.

PART 2 - PRODUCTS

2.1 PAINT, GENERAL

A. MPI Standards: Provide products that comply with MPI standards indicated and that are listed in its "MPI Approved Products List."

B. Material Compatibility:

1. Provide materials for use within each paint system that are compatible with one another and substrates indicated, under conditions of service and application as demonstrated by manufacturer, based on testing and field experience.

2. For each coat in a paint system, provide products recommended in writing by manufacturers of topcoat for use in paint system and on substrate indicated.

C. VOC Content: Provide materials that comply with VOC limits of authorities having jurisdiction.

D. Colors:

1. As selected by Owner from manufacturer's full range.

2.2 SOURCE QUALITY CONTROL

A. Testing of Paint Materials: Owner reserves the right to invoke the following procedure:

1. Owner will engage the services of a qualified testing agency to sample paint materials. Contractor will be notified in advance and may be present when samples are taken. If paint materials have already been delivered to Project site, samples may be taken at Project site. Samples will be identified, sealed, and certified by testing agency.

2. Testing agency will perform tests for compliance with product requirements.

3. Owner may direct Contractor to stop applying paints if test results show materials being used do not comply with product requirements. Contractor shall remove noncomplying paint materials from Project site, pay for testing, and repaint surfaces painted with rejected materials. Contractor will be required to remove rejected materials from previously painted surfaces if, on repainting with complying materials, the two paints are incompatible.

PART 3 - EXECUTION

3.1 EXAMINATION

A. Examine substrates and conditions, with Applicator present, for compliance with requirements for maximum moisture content and other conditions affecting performance of the Work.

B. Maximum Moisture Content of Substrates: When measured with an electronic moisture meter as follows:

1. Concrete: 12 percent.

2. Masonry (Clay and CMU): 12 percent.

3. Wood: 15 percent.

4. Gypsum Plaster: 12 percent.

5. Portland Cement Plaster: 12 percent.

6. Gypsum Board: 12 percent.

C. Gypsum Plaster Substrates: Verify that plaster is fully cured.

D. Portland Cement Plaster Substrates: Verify that plaster is fully cured.

E. Gypsum Board Substrates: Verify that finishing compound is sanded smooth.

F. Verify suitability of substrates, including surface conditions and compatibility with existing finishes and primers.

G. Proceed with coating application only after unsatisfactory conditions have been corrected.

1. Application of coating indicates acceptance of surfaces and conditions.

3.2 PREPARATION

A. Comply with manufacturer's written instructions and recommendations in "MPI Manual" and "MPI Maintenance Repainting Manual" applicable to substrates and paint systems indicated.

B. Comply with "Columbus Register of Historic Properties Architectural Guidelines for Maintenance Design and New Construction."

C. Remove hardware, covers, plates, signage and similar items already in place that are removable and are not to be painted. If removal is impractical or impossible because of size or weight of item, provide surface-applied protection before surface preparation and painting.

1. After completing painting operations, use workers skilled in the trades involved to reinstall items that were removed. Remove surface-applied protection.

D. Clean substrates of substances that could impair bond of paints, including dust, dirt, oil, grease, and incompatible paints and encapsulants.

1. Remove incompatible primers and reprime substrate with compatible primers or apply tie coat as required to produce paint systems indicated.

(CONTINUED NEXT SHEET)

BRIDGE POINTE RETAIL CENTER IMPROVEMENTS

NEYER PROPERTIES

6400 - 6550 Riverside Drive
Dublin, Ohio 43017

COMMISSION NUMBER: 1205

TRIAD ARCHITECTS
936 Eastwind Drive, Suite 202
Columbus, Ohio 43081
Phone: (614) 942-1050
Fax: (614) 942-1059
main@triadarchitects.com

DATE: 9/25/2012 - PERMIT SET

SEAL: STATE OF OHIO BRENT T. FOLEY 14892 REGISTERED ARCHITECT

BRENT T. FOLEY, LIC. 14892
EXP: DEC 31, 2012

SPECIFICATIONS

DRAWN BY: AML
CHECKED BY: BTF/ZP

A0.8

P:\Pro-12\1205-Equity Bridge Pointe\100-Cad\20 Current Drawings\1205-Bridge Pointe-Sheet Specifications.dwg, 9/25/2012 10:28:21 AM

(099100 PAINTING - CONTINUED FROM PREVIOUS SHEET)

E. Concrete Substrates: Remove release agents, curing compounds, efflorescence, and chalk. Do not paint surfaces if moisture content or alkalinity of surfaces to be painted exceeds that permitted in manufacturer's written instructions.

F. Masonry Substrates: Remove efflorescence and chalk. Do not paint surfaces if moisture content or alkalinity of surfaces or mortar joints exceeds that permitted in manufacturer's written instructions.

G. Steel Substrates: Remove rust, loose mill scale, and shop primer if any. Clean using methods recommended in writing by paint manufacturer but not less than the following:

1. SSPC-SP 3, "Power Tool Cleaning."

H. Shop-Primed Steel Substrates: Clean field welds, bolted connections, and abraded areas of shop paint, and paint exposed areas with the same material as used for shop priming to comply with SSPC-PA 1 for touching up shop-primed surfaces.

I. Galvanized-Metal Substrates: Remove grease and oil residue from galvanized sheet metal by mechanical methods to produce clean, lightly etched surfaces that promote adhesion of subsequently applied paints.

J. Aluminum Substrates: Remove loose surface oxidation.

K. Wood Substrates:

1. Scrape and clean knots. Before applying primer, apply coat of knot sealer recommended in writing by topcoat manufacturer for use in paint system indicated.
2. Sand surfaces that will be exposed to view, and dust off.
3. Prime edges, ends, faces, undersides, and backsides of wood.
4. After priming, fill holes and imperfections in the finish surfaces with putty or plastic wood filler. Sand smooth when dried.

L. Gypsum Plaster, Portland Cement Plaster and Gypsum Board: Repair/fill existing cracks, dents holes or other surface deficiencies prior to painting.

M. Plastic Trim Fabrication Substrates: Remove dust, dirt, and other foreign material that might impair bond of paints to substrates.

3.3 APPLICATION

A. Apply paints according to manufacturer's written instructions and recommendations in "MPI Manual", “MPI Maintenance Repainting Manual” and “Columbus Register of Historic Properties Architectural Guidelines for Maintenance Design and New Construction.”

1. Use applicators and techniques suited for paint and substrate indicated.
2. Paint surfaces behind movable equipment and furniture same as similar exposed surfaces. Before final installation, paint surfaces behind permanently fixed equipment or furniture with prime coat only.
3. Paint front and backsides of access panels, removable or hinged covers, and similar hinged items to match exposed surfaces.
4. Paint surfaces behind movable items same as similar exposed surfaces. Before final installation, paint surfaces behind permanently fixed items with prime coat only.
5. Paint both sides and edges of doors and entire exposed surface of door frames.
6. Paint entire exposed surface of existing previously painted window frames and sashes.
7. Do not paint over labels of independent testing agencies or equipment name, identification, performance rating, or nomenclature plates.
8. Primers specified in painting schedules may be omitted on items that are factory primed or factory finished if acceptable to topcoat manufacturers.

B. Tint undercoats same color as topcoat, but tint each undercoat a lighter shade to facilitate identification of each coat if multiple coats of same material are to be applied. Provide sufficient difference in shade of undercoats to distinguish each separate coat.
C. If undercoats or other conditions show through topcoat, apply additional coats until cured film has a uniform paint finish, color, and appearance.
D. Apply paints to produce surface films without cloudiness, spotting, holidays, laps, brush marks, roller tracking, runs, sags, ropiness, or other surface imperfections. Cut in sharp lines and color breaks.
E. Painting Fire Suppression, Plumbing, HVAC, Electrical, Communication, and Electronic Safety and Security Work:

1. Paint the following work where exposed to view:
   a. Equipment, including panelboards and switch gear.
   b. Uninsulated metal piping.
   c. Uninsulated plastic piping.
   d. Pipe hangers and supports.
   e. Metal conduit.
   f. Plastic conduit.
   g. Tanks that do not have factory-applied final finishes.
   h. Duct, equipment, and pipe insulation having paintable jacket material.
   i. Other items as directed by Architect.
2. Paint portions of internal surfaces of metal ducts, without liner, behind air inlets and outlets that are visible from occupied spaces.

3.4 FIELD QUALITY CONTROL

A. Dry Film Thickness Testing: Owner may engage the services of a qualified testing and inspecting agency to inspect and test paint for dry film thickness.

1. Contractor shall touch up and restore painted surfaces damaged by testing.
2. If test results show that dry film thickness of applied paint does not comply with paint manufacturer's written recommendations, Contractor shall pay for testing and apply additional coats as needed to provide dry film thickness that complies with paint manufacturer's written recommendations.

3.5 CLEANING AND PROTECTION

A. At end of each workday, remove rubbish, empty cans, rags, and other discarded materials from Project site.
B. After completing paint application, clean spattered surfaces. Remove spattered paints by washing, scraping, or other methods. Do not scratch or damage adjacent finished surfaces.
C. Protect work of other trades against damage from paint application. Correct damage to work of other trades by cleaning, repairing, replacing, and refinishing, as approved by Architect, and leave in an undamaged condition.
D. At completion of construction activities of other trades, touch up and restore damaged or defaced painted surfaces.

3.6 EXTERIOR PAINTING SCHEDULE

A. Concrete Substrates, Nontraffic Surfaces:

1. Latex System:
   a. Prime Coat: Latex, exterior, matching topcoat.
   b. Intermediate Coat: Latex, exterior, matching topcoat.
   c. Topcoat: Latex, exterior (Gloss Level to match existing paint). MPI # 10, 11, 15 or 119.

B. Cementitious Composition Board

1. Latex System:
   a. Prime Coat: Latex, exterior, matching topcoat.
   b. Intermediate Coat: Latex, exterior, matching topcoat.
   c. Topcoat: Latex, exterior (Gloss Level to match existing paint). MPI # 10, 11, 15 or 119.

C. Clay-Masonry Substrates:

1. Latex System:
   a. Prime Coat: Latex, exterior, matching topcoat.
   b. Intermediate Coat: Latex, exterior, matching topcoat.
   c. Topcoat: Latex, exterior (Gloss Level to match existing paint). MPI # 10, 11, 15 or 119.

D. CMU Substrates:

1. Latex System:
   a. Prime Coat: Block filler, latex, interior/exterior, MPI #4.
   b. Intermediate Coat: Latex, exterior, matching topcoat.
   c. Topcoat: Latex, exterior flat (Gloss Level to match existing paint). MPI # 10, 11, 15 or 119.

E. Steel Substrates:

1. Pigmented Polyurethane over Epoxy Zinc-Rich and High Build Epoxy Sytem:
   a. Prime Coat: Epoxy Zinc-Rich, MPI #20.
   b. First Intermediate Coat: High Build Epoxy, MPI #108.
   c. Second Intermediate Coat: Pigmented Polyurethane matching topcoat.
   d. Topcoat: Pigmented Polyurethane, gloss (Gloss Level 6), MPI #72.

F. Galvanized-Metal Substrates:

1. Pigmented Polyurethane over Epoxy Primer System:
   a. Prime Coat: Epoxy Primer, MPI #101.
   b. Intermediate Coat: Pigmented Polyurethane, matching topcoat.
   c. Topcoat: Pigmented Polyurethane gloss (Gloss Level 6), MPI #72.

G. Aluminum Substrates:

1. Latex System:
   a. Prime Coat: Primer, quick dry, for aluminum, MPI #95.
   b. Intermediate Coat: Latex, exterior, matching topcoat.
   c. Topcoat: Latex, exterior flat (Gloss Level to match existing paint), MPI #10, 11, 15 or 119.

H. Wood Substrates: Including wood trim, architectural woodwork, doors, windows, wood siding, wood-based panel products, exposed joists, exposed beams, wood shingles and shakes (excluding roofs).

1. Latex System:
   a. Prime Coat: Primer, latex for exterior wood, MPI #6.
   b. Intermediate Coat: Latex, exterior, matching topcoat.
   c. Topcoat: Latex, exterior flat (Gloss Level to match existing paint), MPI #10, 11, 15 or 119.

I. Plastic Trim Fabrication Substrates:

1. Latex System:
   a. Prime Coat: Primer, bonding, water based, MPI #17.
   b. Intermediate Coat: Latex, exterior, matching topcoat.
   c. Topcoat: Latex, exterior flat (Gloss Level to match existing paint), MPI #10, 11, 15 or 119.

J. Portland Cement Plaster Substrates:

1. Latex System:
   a. Prime Coat: Latex, exterior, matching topcoat.
   b. Intermediate Coat: Latex, exterior, matching topcoat.
   c. Topcoat: Latex, exterior flat (Gloss Level to match existing paint), MPI #10, 11, 15 or 119.

K. Exterior Gypsum Board Substrates:

1. Latex System:
   a. Prime Coat: Latex, exterior, matching topcoat.
   b. Intermediate Coat: Latex, exterior, matching topcoat.

Topcoat: Latex, exterior flat (Gloss Level to match existing paint), MPI #10, 11, 15 or 119

3.7 INTERIOR PAINTING SCHEDULE

A. Concrete Substrates, Nontraffic Surfaces:

1. Institutional Low-Odor/VOC Latex System:
   a. Prime Coat: Primer sealer, interior, institutional low odor/VOC, MPI #149.
   b. Intermediate Coat: Latex, interior, institutional low odor/VOC, matching topcoat.
   c. Topcoat: Latex, interior, institutional low odor/VOC, semi-gloss (Gloss Level 5), MPI #147.

B. Clay-Masonry Substrates:

1. Institutional Low-Odor/VOC Latex System:
   a. Prime Coat: Primer sealer, interior, institutional low odor/VOC, MPI #149.
   b. Intermediate Coat: Latex, interior, institutional low odor/VOC, matching topcoat.
   c. Topcoat: Latex, interior, institutional low odor/VOC, semi-gloss (Gloss Level 5), MPI #147.

C. CMU Substrates:

1. Institutional Low-Odor/VOC Latex System:
   a. Block Filler: Block filler, latex, interior/exterior, MPI #4.
   b. Intermediate Coat: Latex, interior, institutional low odor/VOC, matching topcoat.
   c. Topcoat: Latex, interior, institutional low odor/VOC, semi-gloss (Gloss Level 5), MPI #147.
2. Epoxy (Tile like for Wet Environments) System:
   a. Block Filler: Epoxy Block Filler, MPI #116.
   b. Intermediate Coat: Epoxy, matching topcoat.
   c. Topcoat: Epoxy, MPI #77.
   d. Surfaces: Showers.

D. Cementitious Wood Fiber Deck (Tectum) Substrate

1. Water-Based Dry-Fall System:
   a. Prime: Dry fall, latex, flat, MPI #118.
   b. Topcoat: Dry fall, latex, flat, MPI #118.

E. Steel Substrates:

1. Water-Based Dry-Fall System:
   a. Prime Coat: Primer, alkyd, anti-corrosive, for metal, MPI #79 or primer, alkyd, quick dry, for metal, MPI #76.
   b. Prime Coat: Shop primer specified in Division 05 Section where substrate is specified.
   c. Topcoat: Dry fall, latex, flat, MPI #118.
2. Institutional Low-Odor/VOC Latex System:
   a. Prime Coat: Primer, rust-inhibitive, water based MPI #107.
   b. Intermediate Coat: Latex, interior, institutional low odor/VOC, matching topcoat.
   c. Topcoat: Latex, interior, institutional low odor/VOC, flat (Gloss Level 1), MPI #143.
      1) Surfaces: Where there is Exposed Structure in lieu of a finish ceiling-At Contractor's Option in lieu of Water Based Dry Fall System.
   d. Topcoat: Latex, interior, institutional low odor/VOC, semi-gloss (Gloss Level 5), MPI #147.
3. Pigmented Polyurethane over Inorganic Zinc and Epoxy
   a. Prime Coat: Inorganic Zinc Primer, MPI 19
   b. Intermediate Coat: High Build Epoxy, MPI 108
   c. Top Coat: Pigmented Polyurethane, gloss (Gloss Level 6), MPI 72.
      1) Surfaces: Railings only.

F. Galvanized-Metal Substrates:

1. Water-Based Dry-Fall System:
   a. Prime Coat: Dry fall, water based, for galvanized steel, flat (Gloss Level 1), MPI #133.
   b. Topcoat: Dry fall, water based, for galvanized steel, flat (Gloss Level 1), MPI #133.
2. Institutional Low-Odor/VOC Latex System:
   a. Prime Coat: Primer, galvanized, water based, MPI #134.
   b. Intermediate Coat: Latex, interior, institutional low odor/VOC, matching topcoat.
   c. Topcoat: Latex, interior, institutional low odor/VOC, flat (Gloss Level 1), MPI #143.
      1) Surfaces: Where there is Exposed Structure in lieu of a finish ceiling-At Contractor's Option in lieu of Water Based Dry Fall System.
   d. Topcoat: Latex, interior, institutional low odor/VOC, semi-gloss (Gloss Level 5), MPI #147.
3. Pigmented Polyurethane System:
   a. Prime Coat: Primer, epoxy, as recommended in writing by topcoat manufacturer.
   b. Intermediate Coat: Polyurethane, two-component, pigmented, gloss (Gloss Level 6), MPI #72.
   c. Topcoat: Polyurethane, two-component, pigmented, gloss (Gloss Level 6), MPI #72.
      1) Surfaces: Railings.

G. Aluminum (Not Anodized or Otherwise Coated) Substrates:

1. Institutional Low-Odor/VOC Latex System:
   a. Prime Coat: Primer, quick dry, for aluminum, MPI #95.
   b. Intermediate Coat: Latex, interior, institutional low odor/VOC, matching topcoat.
   c. Topcoat: Latex, interior, institutional low odor/VOC, semi-gloss (Gloss Level 5), MPI #147.

H. Wood Substrates: Including wood trim, architectural woodwork, doors, windows, wood-based panel products, glued-laminated construction, exposed joists and exposed beams.

1. Institutional Low-Odor/VOC Latex System:
   a. Prime Coat: Primer, latex, for interior wood, MPI #39.
   b. Intermediate Coat: Latex, interior, institutional low odor/VOC, matching topcoat.
   c. Topcoat: Latex, interior, institutional low odor/VOC, semi-gloss (Gloss Level 5), MPI #147.

I. Fiberglass and Plastic Substrates:

2. Institutional Low-Odor/VOC Latex System:
   a. Prime Coat: Primer, bonding, water based, MPI #17.
   b. Prime Coat: Primer, bonding, solvent based, MPI #69.
   c. Intermediate Coat: Latex, interior, institutional low odor/VOC, matching topcoat.
   d. Topcoat: Latex, interior, institutional low odor/VOC, semi-gloss (Gloss Level 5), MPI #147.

J. Gypsum Board or Plaster Substrates:

3. Institutional Low-Odor/VOC Latex System:
   a. Prime Coat: Primer sealer, interior, institutional low odor/VOC, MPI #149.
   b. Intermediate Coat: Latex, interior, institutional low odor/VOC, matching topcoat.
   c. Topcoat: Latex, interior, institutional low odor/VOC, flat (Gloss Level 1), MPI #143.
      1) Surfaces: Ceilings and soffits only.
   d. Topcoat: Latex, interior, institutional low odor/VOC, semi-gloss (Gloss Level 5), MPI #147.

END OF SECTION 099100

SECTION 311000 - SITE CLEARING

PART 1 - GENERAL

1.1 RELATED DOCUMENTS

A. Drawings and general provisions of the Contract, including General and Supplementary Conditions and Specification Sections, apply to this Section.

1.2 SUMMARY

A. Section Includes:

1. Protecting existing vegetation to remain.
2. Removing existing vegetation.
3. Clearing and grubbing.
4. Stripping, stockpiling and reusing topsoil.
5. Removing above- and below-grade site improvements.
6. Temporary erosion- and sedimentation-control measures.

1.3 DEFINITIONS

A. Subsoil: All soil beneath the topsoil layer of the soil profile, and typified by the lack of organic matter and soil organisms.
B. Surface Soil: Soil that is present at the top layer of the existing soil profile at the Project site. In undisturbed areas, the surface soil is typically topsoil; but in disturbed areas such as urban environments, the surface soil can be subsoil.
C. Topsoil: Top layer of the soil profile consisting of existing native surface topsoil or existing in-place surface soil and is the zone where plant roots grow. Its appearance is generally friable, pervious, and black or a darker shade of brown, gray, or red than underlying subsoil; reasonably free of subsoil, clay lumps, gravel, and other objects more than 2 inches (50 mm) in diameter; and free of subsoil and weeds, roots, toxic materials, or other non-soil materials.
D. Plant-Protection Zone: Area surrounding individual trees, groups of trees, shrubs, or other vegetation to be protected during construction.
E. Tree-Protection Zone: Area surrounding individual trees or groups of trees to be protected during construction, and defined by a circle concentric with each tree with a radius 1.5 times the diameter of the drip line unless otherwise indicated.
F. Vegetation: Trees, shrubs, groundcovers, grass, and other plants.

1.4 MATERIAL OWNERSHIP

A. Except for stripped topsoil and other materials indicated to be stockpiled or otherwise remain Owner's property, cleared materials shall become Contractor's property and shall be removed from Project site.

1.5 PROJECT CONDITIONS

A. Traffic: Minimize interference with adjoining roads, streets, walks, and other adjacent occupied or used facilities during site-clearing operations.

1. Do not close or obstruct streets, walks, or other adjacent occupied or used facilities without permission from Owner and authorities having jurisdiction.
2. Provide alternate routes around closed or obstructed traffic ways if required by Owner or authorities having jurisdiction.

B. Utility Locator Service: Notify utility locator service for area where Project is located before site clearing.
C. Do not commence site clearing operations until temporary erosion- and sedimentation-control and plant-protection measures are in place.
D. The following practices are prohibited within protection zones:

1. Storage of construction materials, debris, or excavated material.
2. Parking vehicles or equipment.
3. Foot traffic.
4. Erection of sheds or structures.
5. Impoundment of water.
6. Excavation or other digging unless otherwise indicated.
7. Attachment of signs to or wrapping materials around trees or plants unless otherwise indicated.

E. Do not direct vehicle or equipment exhaust towards protection zones.
F. Prohibit heat sources, flames, ignition sources, and smoking within or near protection zones.
G. Soil Stripping, Handling, and Stockpiling: Perform only when the topsoil is dry or slightly moist.

PART 2 - PRODUCTS

2.1 MATERIALS

A. Satisfactory Soil Material: Requirements for satisfactory soil material are specified in Division 31 Section "Earth Moving."

1. Obtain approved borrow soil material off-site when satisfactory soil material is not available on-site.

PART 3 - EXECUTION

3.1 PREPARATION

A. Protect and maintain benchmarks and survey control points from disturbance during construction.
B. Locate and clearly identify trees, shrubs, and other vegetation to remain. Flag each tree trunk at 54 inches (1372 mm) above the ground.
C. Protect existing site improvements to remain from damage during construction.

1. Restore damaged improvements to their original condition, as acceptable to Owner.

3.2 TEMPORARY EROSION AND SEDIMENTATION CONTROL

A. Provide temporary erosion- and sedimentation-control measures to prevent soil erosion and discharge of soil-bearing water runoff or airborne dust to adjacent properties and walkways, according to requirements of authorities having jurisdiction.
B. Verify that flows of water redirected from construction areas or generated by construction activity do not enter or cross protection zones.
C. Inspect, maintain, and repair erosion- and sedimentation-control measures during construction until permanent vegetation has been established.
D. Remove erosion and sedimentation controls and restore and stabilize areas disturbed during removal.

3.3 TREE AND PLANT PROTECTION

A. General: Protect trees and plants remaining on-site according to requirements in Division 01 Section "Temporary Tree and Plant Protection."
B. Repair or replace trees, shrubs, and other vegetation indicated to remain or be relocated that are damaged by construction operations, in a manner approved by Architect.

3.4 EXISTING UTILITIES

A. Locate, identify, disconnect, and seal or cap utilities indicated to be removed or abandoned in place.

1. Arrange with utility companies to shut off utilities.

B. Interrupting Existing Utilities: Do not interrupt utilities serving facilities occupied by Owner or others unless permitted under the following conditions and then only after arranging to provide temporary utility services according to requirements indicated:

1. Notify Owner not less than two (2) days in advance of proposed utility interruptions.
2. Do not proceed with utility interruptions without Owner's written permission.

3.5 CLEARING AND GRUBBING

A. Remove obstructions, trees, shrubs, and other vegetation to permit installation of new construction.

1. Do not remove trees, shrubs, and other vegetation indicated to remain or to be relocated.
2. Grind down stumps and remove roots, obstructions, and debris to a depth of 18 inches (450 mm) below exposed subgrade.
3. Use only hand methods for grubbing within protection zones.

B. Fill depressions caused by clearing and grubbing operations with satisfactory soil material unless further excavation or earthwork is indicated.

1. Place fill material in horizontal layers not exceeding a loose depth of 8 inches (200 mm), and compact each layer to a density equal to adjacent original ground.

3.6 TOPSOIL STRIPPING

A. Remove sod and grass before stripping topsoil.
B. Strip topsoil in a manner to prevent intermingling with underlying subsoil or other waste materials.

1. Remove subsoil and non-soil materials from topsoil, including clay lumps, gravel, and other objects more than 2 inches (50 mm) in diameter; trash, debris, weeds, roots, and other waste materials.

C. Stockpile topsoil away from edge of excavations without intermixing with subsoil. Grade and shape stockpiles to drain surface water. Cover to prevent windblown dust and erosion by water.

1. Limit height of topsoil stockpiles to 72 inches (1800 mm).
2. Do not stockpile topsoil within protection zones.
3. Dispose of surplus topsoil. Surplus topsoil is that which exceeds amount necessary to be reused.

3.7 SITE IMPROVEMENTS

A. Remove existing above- and below-grade improvements as indicated and necessary to facilitate new construction.
B. Remove slabs, paving, curbs, gutters, and aggregate base as necessary to facilitate new construction.

1. Unless existing full-depth joints coincide with line of demolition, neatly saw-cut along line of existing pavement to remain before removing adjacent existing pavement. Saw-cut faces vertically.
2. Paint cut ends of steel reinforcement in concrete to remain with two coats of antirust coating, following coating manufacturer's written instructions. Keep paint off surfaces that will remain exposed.

3.8 DISPOSAL OF SURPLUS AND WASTE MATERIALS

A. Remove surplus soil material, unsuitable topsoil, obstructions, demolished materials, and waste materials including trash and debris, and legally dispose of them off Owner's property.

END OF SECTION 311000

SECTION 312000 - EARTH MOVING

PART 1 - GENERAL

1.1 RELATED DOCUMENTS

A. Drawings and general provisions of the Contract, including General and Supplementary Conditions and Specification Sections, apply to this Section.

1.2 SUMMARY

A. Section Includes:

1. Excavating and backfilling for footings and foundations.
2. Subsurface drainage backfill for walls and trenches.

B. Related Sections:

1. Division 31 Section "Site Clearing" for site stripping, grubbing, stripping and stockpiling topsoil, and removal of above- and below-grade improvements and utilities.
2. Division 32 Section "Turf and Grasses" for finish grading in turf and grass areas, including preparing and placing planting soil for turf areas.

1.3 DEFINITIONS

A. Backfill: Soil material or controlled low-strength material used to fill an excavation.

1. Initial Backfill: Backfill placed beside and over pipe in a trench, including haunches to support sides of pipe.
2. Final Backfill: Backfill placed over initial backfill to fill a trench.

B. Bedding Course: Aggregate layer placed over the excavated subgrade in a trench before laying pipe.
C. Borrow Soil: Satisfactory soil imported from off-site for use as fill or backfill.
D. Excavation: Removal of material encountered above subgrade elevations and to lines and dimensions indicated.

1. Authorized Additional Excavation: Excavation below subgrade elevations or beyond indicated lines and dimensions as directed by Owner. Authorized additional excavation and replacement material will be paid for according to Contract provisions for unit prices and changes in the Work.
2. Unauthorized Excavation: Excavation below subgrade elevations or beyond indicated lines and dimensions without direction by Owner. Unauthorized excavation, as well as remedial work directed by Owner, shall be without additional compensation.

E. Fill: Soil materials used to raise existing grades.
F. Structures: Buildings, footings, foundations, retaining walls, slabs, tanks, curbs, mechanical and electrical appurtenances, or other man-made stationary features constructed above or below the ground surface.
G. Subgrade: Uppermost surface of an excavation or the top surface of a fill or backfill immediately below subbase, drainage fill, drainage course, or topsoil materials.
H. Utilities: On-site underground pipes, conduits, ducts, and cables, as well as underground services within buildings.

1.4 QUALITY ASSURANCE

A. Geotechnical Testing Agency Qualifications: Qualified according to ASTM E 329 and ASTM D 3740 for testing indicated.

1.5 PROJECT CONDITIONS

A. Traffic: Minimize interference with adjoining roads, streets, walks, and other adjacent occupied or used facilities during earth moving operations.

1. Do not close or obstruct streets, walks, or other adjacent occupied or used facilities without permission from Owner and authorities having jurisdiction.
2. Provide alternate routes around closed or obstructed traffic ways if required by Owner or authorities having jurisdiction.

B. Utility Locator Service: Notify utility locator service for area where Project is located before beginning earth moving operations.
C. Do not commence earth moving operations until temporary erosion- and sedimentation-control measures, specified in Division 31 Section "Site Clearing," are in place.
D. The following practices are prohibited within protection zones:

1. Storage of construction materials, debris, or excavated material.
2. Parking vehicles or equipment.
3. Foot traffic.
4. Erection of sheds or structures.
5. Impoundment of water.
6. Excavation or other digging unless otherwise indicated.
7. Attachment of signs to or wrapping materials around trees or plants unless otherwise indicated.

E. Do not direct vehicle or equipment exhaust towards protection zones.
F. Prohibit heat sources, flames, ignition sources, and smoking within or near protection zones.

PART 2 - PRODUCTS

2.1 SOIL MATERIALS

A. General: Provide borrow soil materials when sufficient satisfactory soil materials are not available from excavations.
B. Satisfactory Soils: As indicated by Geotechnical reports.
C. Unsatisfactory Soils: As indicated in Geotechnical report.
D. Engineered Fill: Naturally or artificially graded mixture of natural or crushed gravel, crushed stone, and natural or crushed sand; ASTM D 2940; with at least 90 percent passing a 1-1/2-inch (37.5-mm) sieve and not more than 12 percent passing a No. 200 (0.075-mm) sieve.
E. Bedding Course: Naturally or artificially graded mixture of natural or crushed gravel, crushed stone, and natural or crushed sand; ASTM D 2940; except with 100 percent passing a 1-inch (25-mm) sieve and not more than 8 percent passing a No. 200 (0.075-mm) sieve.

PART 3 - EXECUTION

3.1 PREPARATION

A. Protect structures, utilities, sidewalks, pavements, and other facilities from damage caused by settlement, lateral movement, undermining, washout, and other hazards created by earth moving operations.
B. Protect and maintain erosion and sedimentation controls during earth moving operations.
C. Protect subgrades and foundation soils from freezing temperatures and frost. Remove temporary protection before placing subsequent materials.

3.2 DEWATERING

A. Prevent surface water and ground water from entering excavations, from ponding on prepared subgrades, and from flooding Project site and surrounding area.
B. Protect subgrades from softening, undermining, washout, and damage by rain or water accumulation.

1. Reroute surface water runoff away from excavated areas. Do not allow water to accumulate in excavations. Do not use excavated trenches as temporary drainage ditches.

3.3 EXPLOSIVES

A. Explosives: Do not use explosives.

3.4 EXCAVATION, GENERAL

A. Unclassified Excavation: Excavate to subgrade elevations regardless of the character of surface and subsurface conditions encountered. Unclassified excavated materials may include rock, soil materials, and obstructions. No changes in the Contract Sum or the Contract Time will be authorized for rock excavation or removal of obstructions.

1. If excavated materials intended for fill and backfill include unsatisfactory soil materials and rock, replace with satisfactory soil materials.

3.5 EXCAVATION FOR STRUCTURES

A. Excavate to indicated elevations and dimensions within a tolerance of plus or minus 1 inch (25 mm). If applicable, extend excavations a sufficient distance from structures for placing and removing concrete formwork, for installing services and other construction, and for inspections.

1. Excavations for Footings and Foundations: Do not disturb bottom of excavation. Excavate by hand to final grade just before placing concrete reinforcement. Trim bottoms to required lines and grades to leave solid base to receive other work.

B. Excavations at Edges of Tree- and Plant-Protection Zones:

1. Excavate by hand to indicated lines, cross sections, elevations, and subgrades. Use narrow-tine spading forks to comb soil and expose roots. Do not break, tear, or chop exposed roots. Do not use mechanical equipment that rips, tears, or pulls roots.
2. Cut and protect roots according to requirements in Division 01 Section "Temporary Tree and Plant Protection."

3.6 SUBGRADE INSPECTION

A. Notify geotechnical engineering testing agency when excavations have reached required subgrade.
B. If geotechnical engineering testing agency determine that unsatisfactory soil is present, continue excavation and replace with compacted backfill or fill material as directed.
C. Authorized additional excavation and replacement material will be paid for according to Contract provisions for unit prices and changes in the Work.
D. Reconstruct subgrades damaged by freezing temperatures, frost, rain, accumulated water, or construction activities, as directed by geotechnical engineering testing agency, without additional compensation.

3.7 UNAUTHORIZED EXCAVATION

A. Fill unauthorized excavation as directed by geotechnical engineering testing agency.

3.8 STORAGE OF SOIL MATERIALS

A. Stockpile borrowed soil materials and excavated satisfactory soil materials without intermixing. Place, grade, and shape stockpiles to drain surface water. Cover to prevent windblown dust.

1. Stockpile soil materials away from edge of excavations. Do not store within drip line of remaining trees.

3.9 BACKFILL

A. Place and compact backfill in excavations promptly, but not before completing the following:

1. Construction below finish grade including, where applicable, subdrainage, dampproofing, waterproofing, and perimeter insulation.
2. Surveying locations of underground utilities for Record Documents.
3. Testing and inspecting underground utilities.
4. Removing concrete formwork.
5. Removing trash and debris.
6. Removing temporary shoring and bracing, and sheeting.
7. Installing permanent or temporary horizontal bracing on horizontally supported walls.

B. Place backfill on subgrades free of mud, frost, snow, or ice.

3.10 SOIL FILL

A. Plow, scarify, bench, or break up sloped surfaces steeper than 1 vertical to 4 horizontal so fill material will bond with existing material.
B. Place and compact fill material in layers to required elevations as follows:

1. Under grass and planted areas use satisfactory soil material.
2. Under walks and pavements, use satisfactory soil material.
3. Under footings and foundations, use engineered fill.

C. Place soil fill on subgrades free of mud, frost, snow, or ice.

3.11 SOIL MOISTURE CONTROL

A. Uniformly moisten or aerate subgrade and each subsequent fill or backfill soil layer before compaction to within 2 percent of optimum moisture content.

1. Do not place backfill or fill soil material on surfaces that are muddy, frozen, or contain frost or ice.
2. Remove and replace, or scarify and air dry, otherwise satisfactory soil material that exceeds optimum moisture content by 2 percent and is too wet to compact to specified dry unit weight.

3.12 COMPACTION OF SOIL BACKFILLS AND FILLS

A. Place backfill and fill soil materials in layers not more than 8 inches (200 mm) in loose depth for material compacted by heavy compaction equipment, and not more than 4 inches (100 mm) in loose depth for material compacted by hand-operated tampers.
B. Place backfill and fill soil materials evenly on all sides of structures to required elevations, and uniformly along the full length of each structure.
C. Compact soil materials to not less than the following percentages of maximum dry unit weight according to ASTM D 698:

3. Under structures, scarify and recompact top 12 inches (300 mm) of existing subgrade and each layer of backfill or fill soil material at 95 percent.
4. Under walkways, scarify and recompact top 6 inches (150 mm) below subgrade and compact each layer of backfill or fill soil material at 92 percent.
5. Under turf or unpaved areas, scarify and recompact top 6 inches (150 mm) below subgrade and compact each layer of backfill or fill soil material at 85 percent.

3.13 GRADING

A. General: Uniformly grade areas to a smooth surface, free of irregular surface changes. Comply with compaction requirements and grade to cross sections, lines, and elevations indicated.

1. Provide a smooth transition between adjacent existing grades and new grades.
2. Cut out soft spots, fill low spots, and trim high spots to comply with required surface tolerances.

B. Site Rough Grading: Slope grades to direct water away from buildings and to prevent ponding. Finish subgrades to required elevations within the following tolerances:

1. Turf or Unpaved Areas: Plus or minus 1 inch (25 mm).

3.14 SUBBASE AND BASE COURSES UNDER WALKS

A. Place subbase course on subgrades free of mud, frost, snow, or ice.

3.15 FIELD QUALITY CONTROL

A. Special Inspections: Engage a qualified special inspector to perform the following special inspections:

1. Determine prior to placement of fill that site has been prepared in compliance with requirements.
2. Determine that fill material and maximum lift thickness comply with requirements.
3. Determine, at the required frequency, that in-place density of compacted fill complies with requirements.

B. Testing Agency: Engage a qualified geotechnical engineering testing agency to perform tests and inspections.
C. Allow testing agency to inspect and test subgrades and each fill or backfill layer. Proceed with subsequent earth moving only after test results for previously completed work comply with requirements.
D. Footing Subgrade: At footing subgrades, at least one test of each soil stratum will be performed to verify design bearing capacities. Subsequent verification and approval of other footing subgrades may be based on a visual comparison of subgrade with tested subgrade when approved by geotechnical engineering testing agency.
E. Testing agency will test compaction of soils in place according to ASTM D 1556, ASTM D 2167, ASTM D 2922, and ASTM D 2937, as applicable. Tests will be performed at the following locations and frequencies:

1. Trench Backfill: At each compacted initial and final backfill layer, at least one test for every 150 feet (46 m) or less of trench length, but no fewer than two tests.

F. When testing agency reports that subgrades, fills, or backfills have not achieved degree of compaction specified, scarify and moisten or aerate, or remove and replace soil materials to depth required; recompact and retest until specified compaction is obtained.

3.16 PROTECTION

A. Protecting Graded Areas: Protect newly graded areas from traffic, freezing, and erosion. Keep free of trash and debris.
B. Repair and reestablish grades to specified tolerances where completed or partially completed surfaces become eroded, rutted, settled, or where they lose compaction due to subsequent construction operations or weather conditions.

1. Scarify or remove and replace soil material to depth as directed by geotechnical engineering testing agency; reshape and recompact.

C. Where settling occurs before Project correction period elapses, remove finished surfacing, backfill with additional soil material, compact, and reconstruct surfacing.

1. Restore appearance, quality, and condition of finished surfacing to match adjacent work, and eliminate evidence of restoration to greatest extent possible.

3.17 DISPOSAL OF SURPLUS AND WASTE MATERIALS

A. Remove surplus satisfactory soil and waste materials, including unsatisfactory soil, trash, and debris, and legally dispose of them off Owner's property.

END OF SECTION 312000

SECTION 329200 - TURF AND GRASSES

PART 1 - GENERAL

1.1 RELATED DOCUMENTS

A. Drawings and general provisions of the Contract, including General and Supplementary Conditions and Specification Sections, apply to this Section.

1.2 SUMMARY

A. Section Includes:

1. Seeding.
2. Turf renovation.
3. Erosion-control material(s).

B. Related Sections:

1. Division 31 Section "Site Clearing" for topsoil stripping and stockpiling.
2. Division 31 Section "Earth Moving" for excavation, filling and backfilling, and rough grading.

1.3 DEFINITIONS

A. Duff Layer: The surface layer of native topsoil that is composed of mostly decayed leaves, twigs, and detritus.
B. Finish Grade: Elevation of finished surface of planting soil.
C. Manufactured Topsoil: Soil produced off-site by homogeneously blending mineral soils or sand with stabilized organic soil amendments to produce topsoil or planting soil.
D. Planting Soil: Standardized topsoil; existing, native surface topsoil; existing, in-place surface soil; imported topsoil; or manufactured topsoil that is modified with soil amendments and perhaps fertilizers to produce a soil mixture best for plant growth.
E. Subgrade: Surface or elevation of subsoil remaining after excavation is complete, or top surface of a fill or backfill before planting soil is placed.
F. Subsoil: All soil beneath the topsoil layer of the soil profile, and typified by the lack of organic matter and soil organisms.
G. Surface Soil: Soil that is present at the top layer of the existing soil profile at the Project site. In undisturbed areas, the surface soil is typically topsoil, but in disturbed areas such as urban environments, the surface soil can be subsoil.

1.4 QUALITY ASSURANCE

1.5 DELIVERY, STORAGE, AND HANDLING

A. Seed and Other Packaged Materials: Deliver packaged materials in original, unopened containers showing weight, certified analysis, name and address of manufacturer, and indication of conformance with state and federal laws, as applicable.
B. Bulk Materials:

1. Do not dump or store bulk materials near structures, utilities, walkways and pavements, or on existing turf areas or plants.
2. Provide erosion-control measures to prevent erosion or displacement of bulk materials, discharge of soil-bearing water runoff, and airborne dust reaching adjacent properties, water conveyance systems, or walkways.
3. Accompany each delivery of bulk fertilizers, lime, and soil amendments with appropriate certificates.

1.6 PROJECT CONDITIONS

A. Weather Limitations: Proceed with planting only when existing and forecasted weather conditions permit planting to be performed when beneficial and optimum results may be obtained. Apply products during favorable weather conditions according to manufacturer's written instructions.

1.7 MAINTENANCE SERVICE

A. Initial Turf Maintenance Service: Provide full maintenance by skilled employees of landscape Installer. Maintain as required in Part 3. Begin maintenance immediately after each area is planted and continue until acceptable turf is established but for not less than the following periods:

1. Seeded Turf: 60 days from date of Substantial Completion.

(CONTINUED NEXT SHEET)

BRIDGE POINTE
RETAIL CENTER
IMPROVEMENTS

NEYER PROPERTIES

6400 - 6550 Riverside Drive
Dublin, Ohio 43017

COMMISSION NUMBER: 1205

TRIAD ARCHITECTS
936 Eastwind Drive, Suite 202
Columbus, Ohio 43081
Phone: (614) 942-1050
Fax: (614) 942-1059
main@triadarchitects.com

DATE:
9/25/2012 - PERMIT SET

SEAL:
STATE OF OHIO
BRENT T. FOLEY
14892
REGISTERED ARCHITECT

BRENT T. FOLEY, LIC. 14892
EXP: DEC 31, 2012

SPECIFICATIONS

DRAWN BY: AML
CHECKED BY: BTF/ZP

A0.9

P:\Pro-12\1205-Equity Bridge Pointe\100-Cad\20 Current Drawings\1205-Bridge Pointe-Sheet Specifications.dwg, 9/25/2012 10:28:23 AM

(329200 - TURF AND GRASSES - CONTINUED FROM PREVIOUS SHEET)

PART 2 - PRODUCTS

2.1 SEED
A. Grass Seed: Fresh, clean, dry, new-crop seed complying with AOSA's "Journal of Seed Technology; Rules for Testing Seeds" for purity and germination tolerances.
B. Seed Species: State-certified seed of grass species as follows:

2.2 Match species of existing adjacent turf area.INORGANIC SOIL AMENDMENTS
A. Lime: ASTM C 602, agricultural liming material containing a minimum of 80 percent calcium carbonate equivalent and as follows:
1. Class: T, with a minimum of 99 percent passing through No. 8 (2.36-mm) sieve and a minimum of 75 percent passing through No. 60 (0.25-mm) sieve.
B. Aluminum Sulfate: Commercial grade, unadulterated.
C. Perlite: Horticultural perlite, soil amendment grade.
D. Sand: Clean, washed, natural or manufactured, and free of toxic materials.

2.3 ORGANIC SOIL AMENDMENTS
A. Muck Peat: Partially decomposed moss peat, native peat, or reed-sedge peat, finely divided or of granular texture, with a pH range of 6 to 7.5, and having a water-absorbing capacity of 1100 to 2000 percent.
B. Wood Derivatives: Decomposed, nitrogen-treated sawdust, ground bark, or wood waste; of uniform texture and free of chips, stones, sticks, soil, or toxic materials.
1. In lieu of decomposed wood derivatives, mix partially decomposed wood derivatives with ammonium nitrate at a minimum rate of 0.15 lb/cu. ft. (2.4 kg/cu. m) of loose sawdust or ground bark, or with ammonium sulfate at a minimum rate of 0.25 lb/cu. ft. (4 kg/cu. m) of loose sawdust or ground bark.
C. Manure: Well-rotted, unleached, stable or cattle manure containing not more than 25 percent by volume of straw, sawdust, or other bedding materials; free of toxic substances, stones, sticks, soil, weed seed, and material harmful to plant growth.

2.4 FERTILIZERS
A. Bonemeal: Commercial, raw or steamed, finely ground; a minimum of 4 percent nitrogen and 20 percent phosphoric acid.
B. Superphosphate: Commercial, phosphate mixture, soluble; a minimum of 20 percent available phosphoric acid.
C. Commercial Fertilizer: Commercial-grade complete fertilizer of neutral character, consisting of fast- and slow-release nitrogen, 50 percent derived from natural organic sources of urea formaldehyde, phosphorous, and potassium in the following composition:
1. Composition: Nitrogen, phosphorous, and potassium in amounts recommended in soil reports from a qualified soil-testing laboratory.
D. Slow-Release Fertilizer: Granular or pelleted fertilizer consisting of 50 percent water-insoluble nitrogen, phosphorus, and potassium in the following composition:
1. Composition: Nitrogen, phosphorous, and potassium in amounts recommended in soil reports from a qualified soil-testing laboratory.

2.5 PLANTING SOILS
A. Planting Soil: Existing, native surface topsoil formed under natural conditions with the duff layer retained during excavation process and stockpiled on-site. Verify suitability of native surface topsoil to produce viable planting soil. Clean soil of roots, plants, sod, stones, clay lumps, and other extraneous materials harmful to plant growth.
1. Supplement with another specified planting soil when quantities are insufficient.
2. Mix existing, native surface topsoil with soil amendments and fertilizers in quantities approved by owner's ground staff and as recommended by soil testing laboratory to produce planting soil.
B. Planting Soil: Imported topsoil or manufactured topsoil from off-site sources. Obtain topsoil displaced from naturally well-drained construction or mining sites where topsoil occurs at least 4 inches (100 mm) deep; do not obtain from agricultural land, bogs or marshes.
1. Additional Properties of Imported Topsoil or Manufactured Topsoil: Screened and free of stones 1 inch (25 mm) or larger in any dimension; free of roots, plants, sod, clods, clay lumps, pockets of coarse sand, paint, paint washout, concrete slurry, concrete layers or chunks, cement, plaster, building debris, oils, gasoline, diesel fuel, paint thinner, turpentine, tar, roofing compound, acid, and other extraneous materials harmful to plant growth; free of obnoxious weeds and invasive plants including quackgrass, Johnsongrass, poison ivy, nutsedge, nimblewill, Canada thistle, bindweed, bentgrass, wild garlic, ground ivy, perennial sorrel, and bromegrass; not infested with nematodes, grubs, other pests, pest eggs, or other undesirable organisms and disease-causing plant pathogens; friable and with sufficient structure to give good tilth and aeration. Continuous, air-filled, pore-space content on a volume/volume basis shall be at least 15 percent when moisture is present at field capacity. Soil shall have a field capacity of at least 15 percent on a dry weight basis.
2. Mix imported topsoil or manufactured topsoil with soil amendments and fertilizers in quantities approved by owner's grounds staff and as recommended by soil testing laboratory to produce planting soil.

2.6 EROSION-CONTROL MATERIALS
A. Erosion-Control Blankets: Biodegradable wood excelsior, straw, or coconut-fiber mat enclosed in a photodegradable plastic mesh. Include manufacturer's recommended steel wire staples, 6 inches (150 mm) long.
B. Erosion-Control Fiber Mesh: Biodegradable burlap or spun-coir mesh, a minimum of 0.92 lb/sq. yd. (0.5 kg/sq. m), with 50 to 65 percent open area. Include manufacturer's recommended steel wire staples, 6 inches (150 mm) long.
C. Hay or straw bales: Tightly bound of unrotted hay, straw or other grass locally available with wire binding.
D. Bale anchorage: 1/2" X 3'-0" reinforcing rods or 2" X 2" X 3'-0" wood stakes, two (2) per bale.

PART 3 - EXECUTION

3.1 EXAMINATION
A. Examine areas to be planted for compliance with requirements and other conditions affecting performance.
1. Verify that no foreign or deleterious material or liquid such as paint, paint washout, concrete slurry, concrete layers or chunks, cement, plaster, oils, gasoline, diesel fuel, paint thinner, turpentine, tar, roofing compound, or acid has been deposited in soil within a planting area.
2. Do not mix or place soils and soil amendments in frozen, wet, or muddy conditions.
3. Suspend soil spreading, grading, and tilling operations during periods of excessive soil moisture until the moisture content reaches acceptable levels to attain the required results.
4. Uniformly moisten excessively dry soil that is not workable and which is too dusty.
B. Proceed with installation only after unsatisfactory conditions have been corrected.
C. If contamination by foreign or deleterious material or liquid is present in soil within a planting area, remove the soil and contamination as directed by Architect and replace with new planting soil.

3.2 PREPARATION
A. Protect structures, utilities, sidewalks, pavements, and other facilities, trees, shrubs, and plantings from damage caused by planting operations.

Retain first subparagraph below for hydroseeding.

1. Protect grade stakes set by others until directed to remove them.
B. Install erosion-control measures to prevent erosion or displacement of soils and discharge of soil-bearing water runoff or airborne dust to adjacent properties and walkways.

3.3 TURF AREA PREPARATION
A. Limit turf subgrade preparation to areas to be planted.
B. Newly Graded Subgrades: Loosen subgrade to a minimum depth of 8 inches (200 mm). Remove stones larger than 1 inch (25 mm) in any dimension and sticks, roots, rubbish, and other extraneous matter and legally dispose of them off Owner's property.
1. Apply fertilizer directly to subgrade before loosening.
2. Thoroughly blend planting soil off-site before spreading or spread topsoil, apply soil amendments and fertilizer on surface, and thoroughly blend planting soil.
a. Delay mixing fertilizer with planting soil if planting will not proceed within a few days.
b. Mix lime with dry soil before mixing fertilizer.
3. Spread planting soil to a depth of 8 inches (200 mm) but not less than required to meet finish grades after light rolling and natural settlement. Do not spread if planting soil or subgrade is frozen, muddy, or excessively wet.
a. Spread approximately 1/2 the thickness of planting soil over loosened subgrade. Mix thoroughly into top 4 inches (100 mm) of subgrade. Spread remainder of planting soil.
b. Reduce elevation of planting soil to allow for soil thickness of sod.
C. Unchanged Subgrades: If turf is to be planted in areas unaltered or undisturbed by excavating, grading, or surface-soil stripping operations, prepare surface soil as follows:
1. Remove existing grass, vegetation, and turf. Do not mix into surface soil.
2. Loosen surface soil to a depth of at least 8 inches (200 mm). Apply soil amendments and fertilizers according to planting soil mix proportions and mix thoroughly into top 6 inches (150 mm) of soil. Till soil to a homogeneous mixture of fine texture.
a. Apply fertilizer directly to surface soil before loosening.
3. Remove stones larger than 1 inch (25 mm) in any dimension and sticks, roots, trash, and other extraneous matter.
4. Legally dispose of waste material, including grass, vegetation, and turf, off Owner's property.
D. Finish Grading: Grade planting areas to a smooth, uniform surface plane with loose, uniformly fine texture. Grade to within plus or minus 1/2 inch (13 mm) of finish elevation. Roll and rake, remove ridges, and fill depressions to meet finish grades. Limit finish grading to areas that can be planted in the immediate future.

E. Moisten prepared area before planting if soil is dry. Water thoroughly and allow surface to dry before planting. Do not create muddy soil.
F. Before planting, obtain Owner's acceptance of finish grading restore planting areas if eroded or otherwise disturbed after finish grading.

3.4 PREPARATION FOR EROSION-CONTROL MATERIALS
A. Prepare area as specified in "Turf Area Preparation" Article.
B. For erosion-control blanket or mesh, install from top of slope, working downward, and as recommended by material manufacturer for site conditions. Fasten as recommended by material manufacturer.
C. Moisten prepared area before planting if surface is dry. Water thoroughly and allow surface to dry before planting. Do not create muddy soil.

3.5 STRAW BALE BARRIERS
A. Construct where indicated or otherwise required by grading operations to reduce erosion and minimize sediment content runoff.
B. Place tables in a single row, lengthwise on the contour, unless in a swale, with ends of adjacent of bales tightly butted.
C. Wire bound all bales. Install straw bales so that binding are oriented around the sides rather than along the tops and bottoms of the bales.
D. Trench and backfill the barrier. Excavate trench the width of the bales and length of the barrier to a depth of 4". After the bales are stacked and chinked, backfill excavated soil against the barrier. Backfill soil to conform to grade level on downfill side and built up to 4" against the uphill side of the barrier.
E. Securely anchor each bale with at least two stakes driven through the bale. Drive the first stake in each bale toward the previously laid bale to force the bales together. Drive stakes deep enough in the ground securely anchor bales.
F. Chink (fill with wedging) gaps between bales with straw to prevent water from escaping between bales. Scatter loose straw over the area immediately above the barrier to increase battier efficiency.
G. Inspect bales immediately after each rainfall and at lease daily during prolonged rainfall. Make necessary repairs promptly; pay close attention to end runs and undercutting beneath bales.
H. Remove sediment deposits when the level of depositions reaches approximately on half the height of the barrier.
I. Remove straw bales when upslope areas have been permanently stabilized. Dress and reseed any sediment deposits remaining after straw barrier is removed.

3.6 SEEDING
A. Sow seed with spreader or seeding machine. Do not broadcast or drop seed when wind velocity exceeds 5 mph (8 km/h). Evenly distribute seed by sowing equal quantities in two directions at right angles to each other.
1. Do not use wet seed or seed that is moldy or otherwise damaged.
2. Do not seed against existing trees. Limit extent of seed to outside edge of planting saucer.
B. Sow seed at a total rate recommended by seed supplier.
C. Rake seed lightly into top 1/8 inch (3 mm) of soil, roll lightly, and water with fine spray.
D. Protect seeded areas with slopes exceeding 1:4 with erosion-control blankets and 1:6 with erosion-control fiber mesh installed and stapled according to manufacturer's written instructions.
E. Protect seeded areas with slopes not exceeding 1:6 by spreading straw mulch. Spread uniformly at a minimum rate of 2 tons/acre (42 kg/92.9 sq. m) to form a continuous blanket 1-1/2 inches (38 mm) in loose thickness over seeded areas. Spread by hand, blower, or other suitable equipment.
1. Anchor straw mulch by crimping into soil with suitable mechanical equipment.
F. Protect seeded areas from hot, dry weather or drying winds by applying compost mulch, peat mulch or planting soil within 24 hours after completing seeding operations. Soak areas, scatter mulch uniformly to a thickness of 3/16 inch (4.8 mm), and roll surface smooth.

3.7 TURF RENOVATION
A. Renovate existing turf.
B. Renovate existing turf damaged by Contractor's operations, such as storage of materials or equipment and movement of vehicles.
1. Reestablish turf where settlement or washouts occur or where minor regrading is required.
2. Install new planting soil as required.
C. Remove sod and vegetation from diseased or unsatisfactory turf areas; do not bury in soil.
D. Remove topsoil containing foreign materials such as oil drippings, fuel spills, stones, gravel, and other construction materials resulting from Contractor's operations, and replace with new planting soil.
E. Mow, dethatch, core aerate, and rake existing turf.
F. Remove weeds before seeding. Where weeds are extensive, apply selective herbicides as required. Do not use pre-emergence herbicides.
G. Remove waste and foreign materials, including weeds, soil cores, grass, vegetation, and turf, and legally dispose of them off Owner's property.
H. Till stripped, bare, and compacted areas thoroughly to a soil depth of 6 inches (150 mm).
I. Apply soil amendments and initial fertilizers required for establishing new turf and mix thoroughly into top 4 inches (100 mm) of existing soil. Install new planting soil to fill low spots and meet finish grades.
J. Apply seed and protect with straw mulch or sod as required for new turf.
K. Water newly planted areas and keep moist until new turf is established.

3.8 TURF MAINTENANCE
A. Maintain and establish turf by watering, fertilizing, weeding, mowing, trimming, replanting, and performing other operations as required to establish healthy, viable turf. Roll, regrade, and replant bare or eroded areas and remulch to produce a uniformly smooth turf. Provide materials and installation the same as those used in the original installation.
1. Fill in as necessary soil subsidence that may occur because of settling or other processes. Replace materials and turf damaged or lost in areas of subsidence.
2. In areas where mulch has been disturbed by wind or maintenance operations, add new mulch and anchor as required to prevent displacement.
3. Apply treatments as required to keep turf and soil free of pests and pathogens or disease. Use integrated pest management practices whenever possible to minimize the use of pesticides and reduce hazards.
B. Watering: Install and maintain temporary piping, hoses, and turf-watering equipment to convey water from sources and to keep turf uniformly moist to a depth of 4 inches (100 mm).
1. Schedule watering to prevent wilting, puddling, erosion, and displacement of seed or mulch. Lay out temporary watering system to avoid walking over muddy or newly planted areas.
2. Water turf with fine spray at a minimum rate of 1 inch (25 mm) per week unless rainfall precipitation is adequate.

C. Mow turf as soon as top growth is tall enough to cut. Repeat mowing to maintain specified height without cutting more than 1/3 of grass height. Remove no more than 1/3 of grass-leaf growth in initial or subsequent mowings. Do not delay mowing until grass blades bend over and become matted. Do not mow when grass is wet. Schedule initial and subsequent mowings to maintain the following grass height:
1. Mow to height as directed by owner's building and grounds staff.
D. Turf Postfertilization: Apply fertilizer after initial mowing and when grass is dry.
1. Use fertilizer that will provide actual nitrogen of at least 1 lb/1000 sq. ft. (0.45 kg/92.9 sq. m) to turf area.

3.9 SATISFACTORY TURF
A. Turf installations shall meet the following criteria as determined by Architect:
1. Satisfactory Seeded Turf: At end of maintenance period, a healthy, uniform, close stand of grass has been established, free of weeds and surface irregularities, with coverage exceeding 90 percent over any 10 sq. ft. (0.92 sq. m) and bare spots not exceeding 5 by 5 inches (125 by 125 mm).
B. Use specified materials to reestablish turf that does not comply with requirements and continue maintenance until turf is satisfactory.

3.10 CLEANUP AND PROTECTION
A. Promptly remove soil and debris created by turf work from paved areas. Clean wheels of vehicles before leaving site to avoid tracking soil onto roads, walks, or other paved areas.
B. Erect temporary fencing or barricades and warning signs as required to protect newly planted areas from traffic. Maintain fencing and barricades throughout initial maintenance period and remove after plantings are established.
C. Remove nondegradable erosion-control measures after grass establishment period.

END OF SECTION 329200

EXTERIOR FINISH SCHEDULE

MARK	ITEM	FINISH
BRK-1	BRICK VENEER - RUNNING BOND	GLEN-GERY MODULAR UNIT, "ABERDEEN", MORTAR - COLOR TO MATCH STN-1
BRK-2	THIN-BRICK PANEL SYSTEM - RUNNING BOND	GLEN-GERY MODULAR UNIT, "ABERDEEN", MORTAR - COLOR TO MATCH STN-1
EIFS-1	EXTERIOR INSULATION FINISH SYSTEM - FIELD	BASF SENERGY 'PARCHMENT' #342, FINE FINISH
EIFS-2	EXTERIOR INSULATION FINISH SYSTEM - ACCENT	BASF SENERGY 'CONCORD' #3106, FINE FINISH
LT-1	WALL MOUNTED DECORATIVE LIGHT FIXTURE	ELCAST LIGHTING - 5000 SERIES LED, MATTE BRONZE FINISH
LT-2	SIGNAGE LIGHTING	HYDREL - 4750 SERIES, BLACK FINISH
MTL-1	PREFINISHED METAL COPINGS (24GA)	COLOR TO MATCH ADJACENT EIFS MATERIAL
MTL-2	PREFINISHED METAL WALL/PIER CAPS	COLOR TO MATCH STN-1
PT-1	METAL LOUVERS	BENJAMIN MOORE, EXTERIOR PAINT #2131-10 "BLACK SATIN"
PT-2	EXISTING ITEMS. SEE KEY NOTES FOR DETAILS.	BENJAMIN MOORE, EXTERIOR PAINT #HC-95 - "SAG HARBOR GRAY"
PT-3	SOFFITS	BENJAMIN MOORE, EXTERIOR PAINT #HC-27 - "MONTEREY WHITE"
STF-1	ALUMINUM STOREFRONT SYSTEM	KAWNEER TRIFAB VG 451T SERIES, 2"X4 ½" WITH 1" INSULATED GLASS UNITS. COLOR TO MATCH EXISTING.
STN-1	CAST STONE BASE AND WATER TABLE	SHOULDICE DESIGNER STONE "DESERT BLUFF," TAPESTRY FINISH or LIMESTONE VENEER OF SIMILAR COLOR AND FINISH - MORTAR COLOR TO MATCH STONE
STN-2	THIN STONE VENEER	GLEN-GERY THIN TECH CAST STONE, COLOR TO MATCH STN-1

BRIDGE POINTE
RETAIL CENTER
IMPROVEMENTS

NEYER PROPERTIES

6400 - 6550 Riverside Drive
Dublin, Ohio 43017

COMMISSION NUMBER: 1205

TRIAD ARCHITECTS
936 Eastwind Drive, Suite 202
Columbus, Ohio 43081
Phone: (614) 942-1050
Fax: (614) 942-1059
main@triadarchitects.com

DATE:
9/25/2012 - PERMIT SET

SEAL:
STATE OF OHIO
BRENT T. FOLEY
14892
REGISTERED ARCHITECT

BRENT T. FOLEY, LIC. 14892
EXP: DEC 31, 2012

SPECIFICATIONS &
EXTERIOR FINISH SCHEDULE

DRAWN BY: AML
CHECKED BY: BTF/ZP

A0.10

P:\Pro-12\1205-Equity Bridge Pointe\100-Cad\20 Current Drawings\1205-Bridge Pointe-Sheet Specifications.dwg, 9/25/2012 10:28:24 AM

OVERALL PROPOSED SITE PLAN
1" = 40'-0"

SITE LEGEND

PROPERTY OR R.O.W. LINE

DESIGNATED STAGING AREA

KEY NOTES

1. EXISTING TRASH ENCLOSURE. INSTALL WOOD GATES AND REPAIR ALL DAMAGED ELEMENTS. GATES AND ENCLOSURES TO BE PAINTED TO MATCH THE REST OF THE BUILDING.
2. PAINT ALL EXISTING ITEMS THIS ELEVATION SIMILAR TO ELEVATION A (A/A2.0).
3. NOT USED
4. MASONRY DUMPSTER ENCLOSURE. SEE 1/AS1.1.
5. WOOD DOUBLE-DUMPSTER ENCLOSURE. SEE 2/AS1.1.
6. CONCRETE CURB. SEE B/AS1.2.
7. REMOVE EXISTING PAVEMENT AND CURBS THIS AREA. PROVIDE LANDSCAPING TO MATCH EXISTING.
8. EXISTING CROSSWALK AND SIDEWALK.
9. CONCRETE SIDEWALK. SEE DETAILS C, D, E AND F/AS1.2.

BRIDGE POINTE
RETAIL CENTER
IMPROVEMENTS

NEYER PROPERTIES

6400 - 6550 Riverside Drive
Dublin, Ohio 43017

COMMISSION NUMBER: 1205

TRIAD ARCHITECTS
936 Eastwind Drive, Suite 202
Columbus, Ohio 43081
Phone: (614) 942-1050
Fax: (614) 942-1059
main@triadarchitects.com

DATE:
9/25/2012 - PERMIT SET

SEAL:
STATE OF OHIO
BRENT T. FOLEY
14892
REGISTERED ARCHITECT

BRENT T. FOLEY, LIC. 14892
EXP: DEC 31, 2012

OVERALL SITE PLAN

1

NORTH

DRAWN BY: AML
CHECKED BY: BTF/ZP

AS1.0

P:\Pro-12\1205-Equity Bridge Pointe\100-Cad\20 Current Drawings\1205-Bridge Point-Site Plan.dwg, 9/25/2012 10:28:33 AM

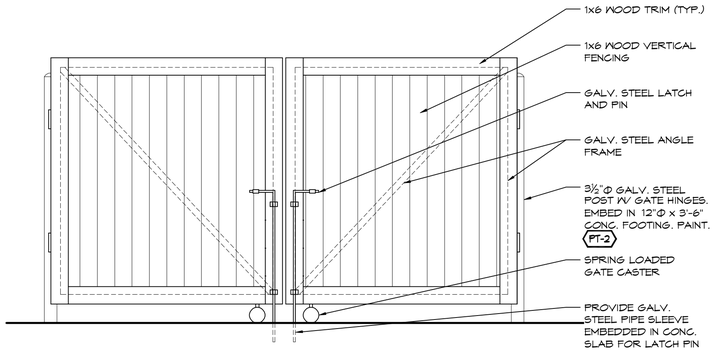

1. ALL WOOD TO BE PRESSURE PRESERVATIVE TREATED.
2. ALL WOOD TO BE WESTERN CEDAR UNLESS NOTED OTHERWISE. FINISH FACE TO MATCH PT-2

TYPICAL DUMPSTER ENCLOSURE GATE ELEVATION (8)

1/2" = 1'-0"

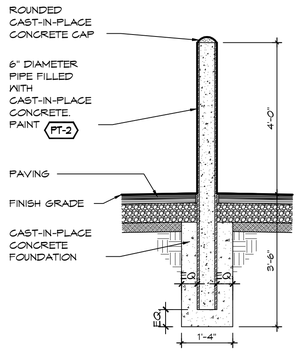

TYPICAL BOLLARD DETAIL (5)

1/2" = 1'-0"

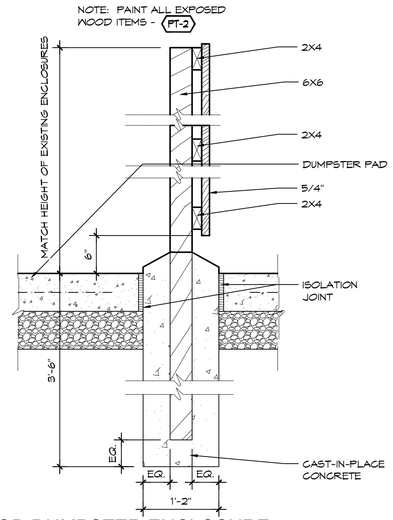

WOOD DUMPSTER ENCLOSURE TYPICAL FENCE SECTION (4)

1" = 1'-0"

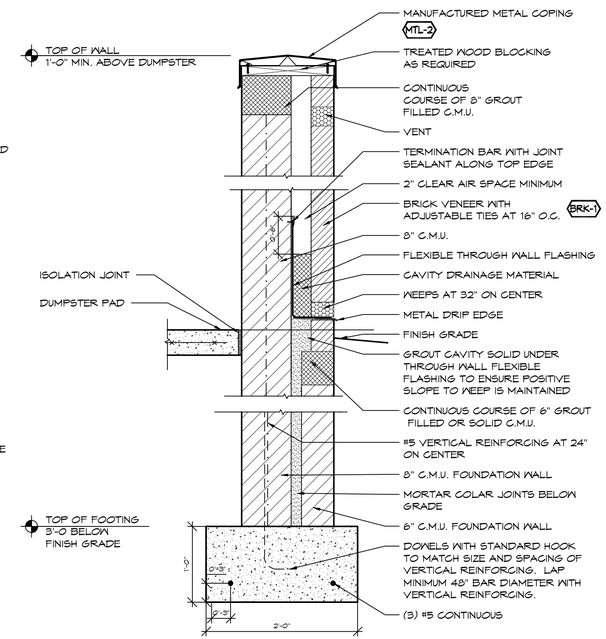

MASONRY DUMPSTER ENCLOSURE TYPICAL WALL SECTION (2)

1" = 1'-0"

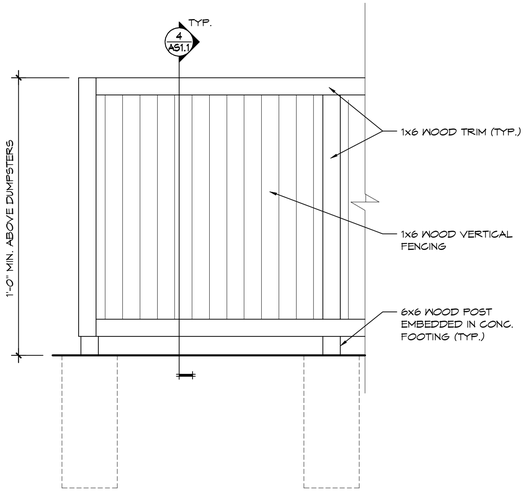

1. ALL WOOD TO BE PRESSURE PRESERVATIVE TREATED.
2. ALL WOOD TO BE WESTERN CEDAR UNLESS NOTED OTHERWISE. FINISH FACE TO MATCH PT-2

TYPICAL WOOD DUMPSTER ENCLOSURE ELEVATION (7)

1/2" = 1'-0"

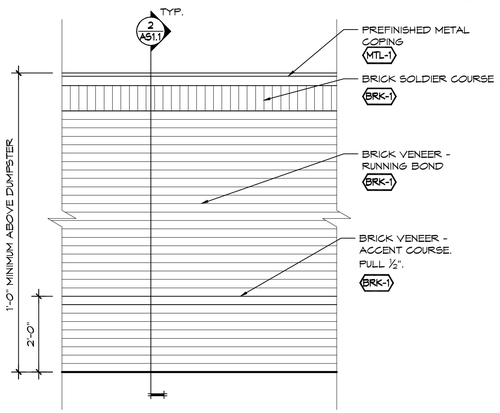

TYPICAL MASONRY DUMPSTER ENCLOSURE ELEVATION (6)

1/2" = 1'-0"

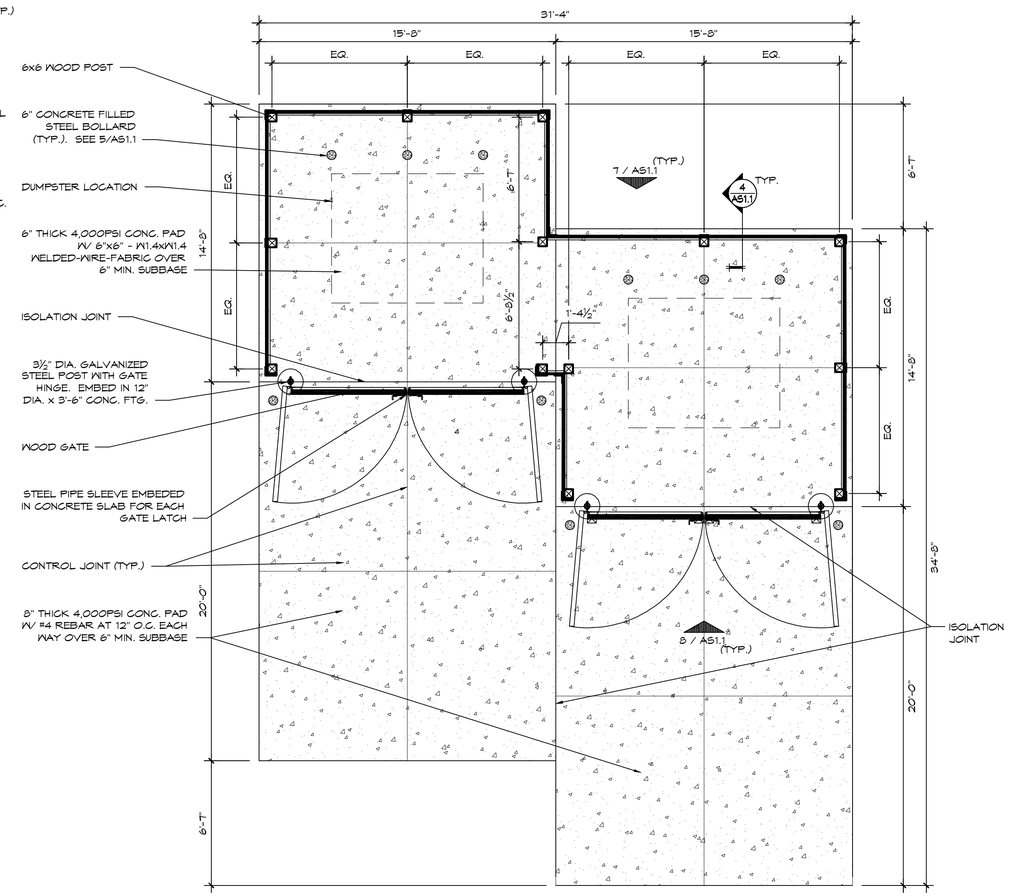

WOOD DOUBLE-DUMPSTER ENCLOSURE PLAN (3)

1/4" = 1'-0"

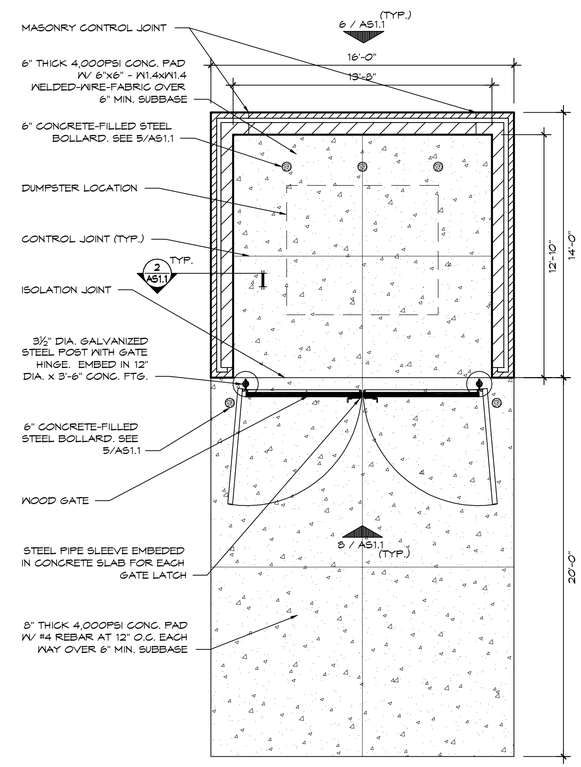

MASONRY DUMPSTER ENCLOSURE PLAN (1)

1/4" = 1'-0"

BRIDGE POINTE RETAIL CENTER IMPROVEMENTS

NEYER PROPERTIES

6400 - 6550 Riverside Drive
Dublin, Ohio 43017

COMMISSION NUMBER: 1205

TRIAD ARCHITECTS
936 Eastwind Drive, Suite 202
Columbus, Ohio 43081
Phone: (614) 942-1050
Fax: (614) 942-1059
main@triadarchitects.com

DATE: 9/25/2012 - PERMIT SET

SEAL: STATE OF OHIO — BRENT T. FOLEY 14892 — REGISTERED ARCHITECT

BRENT T. FOLEY, LIC. 14892
EXP: DEC 31, 2012

SITE DETAILS

DRAWN BY: AML
CHECKED BY: BTF/ZP

AS1.1

P:\Pro-12\1205-Equity Bridge Pointe\100-Cad\20 Current Drawings\1205-Bridge Point-Site Plan.dwg, 9/25/2012 10:28:38 AM

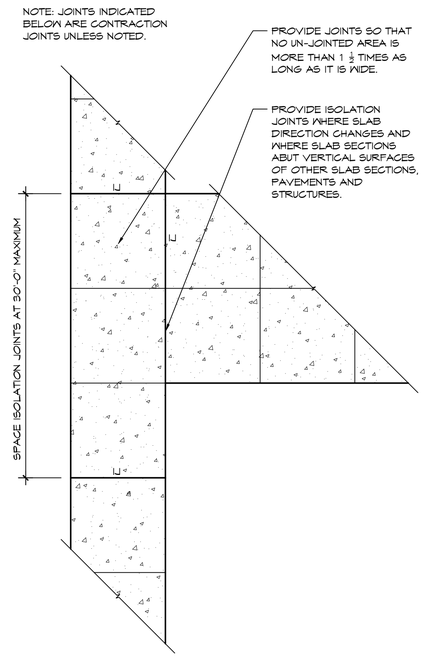

ISOLATION AND CONTRACTION JOINT DIAGRAM (F)

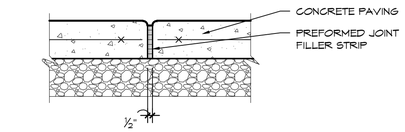

TYPICAL ISOLATION JOINT (IJ) (D)

1-1/2" = 1'-0"

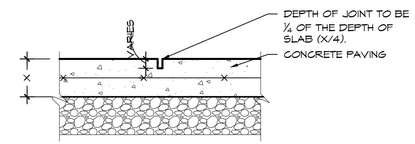

TYPICAL CONTRACTION JOINT (CJ) (C)

1-1/2" = 1'-0"

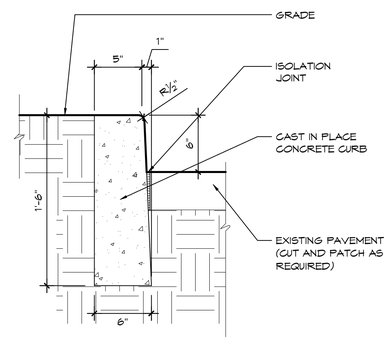

TYPICAL CONCRETE CURB DETAIL (B)

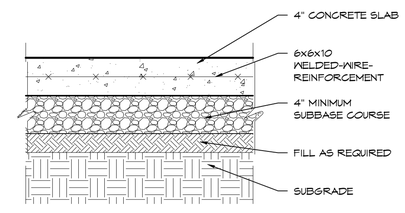

TYPICAL CONCRETE WALK DETAIL (E)

1-1/2" = 1'-0"

NOT USED (A)

BRIDGE POINTE RETAIL CENTER IMPROVEMENTS

NEYER PROPERTIES

6400 - 6550 Riverside Drive
Dublin, Ohio 43017

COMMISSION NUMBER: 1205

TRIAD ARCHITECTS
936 Eastwind Drive, Suite 202
Columbus, Ohio 43081
Phone: (614) 942-1050
Fax: (614) 942-1059
main@triadarchitects.com

DATE:
9/25/2012 - PERMIT SET

SEAL:
STATE OF OHIO
BRENT T. FOLEY
14892
REGISTERED ARCHITECT

BRENT T. FOLEY, LIC. 14892
EXP: DEC 31, 2012

SITE DETAILS

DRAWN BY: AML
CHECKED BY: BTF/ZP

AS1.2

P:\Pro-12\1205-Equity Bridge Pointe\100-Cad\20 Current Drawings\1205-Bridge Point-Site Plan.dwg, 9/25/2012 10:28:41 AM

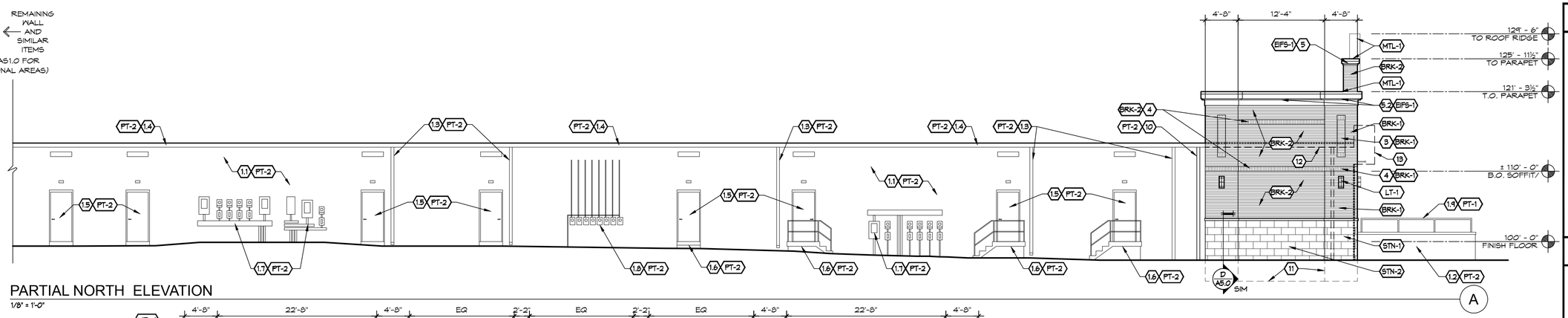

PARTIAL NORTH ELEVATION

1/8" = 1'-0"

A

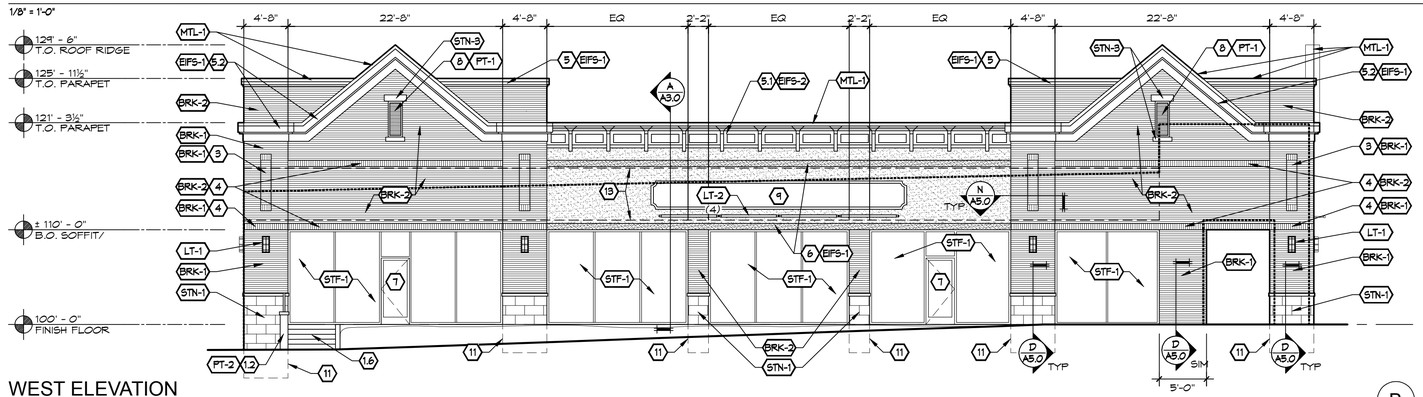

WEST ELEVATION

1/8" = 1'-0"

B

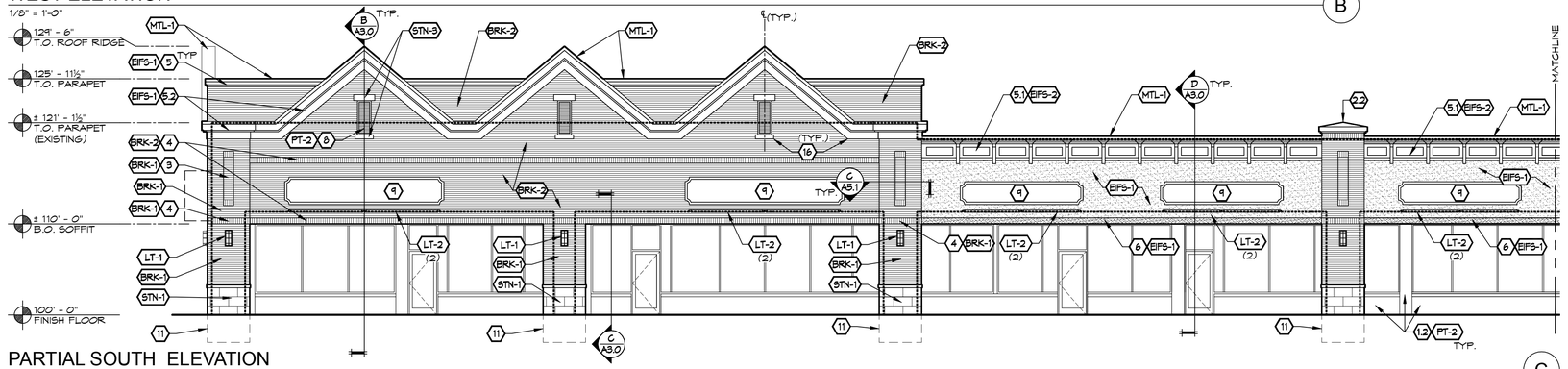

PARTIAL SOUTH ELEVATION

1/8" = 1'-0"

C

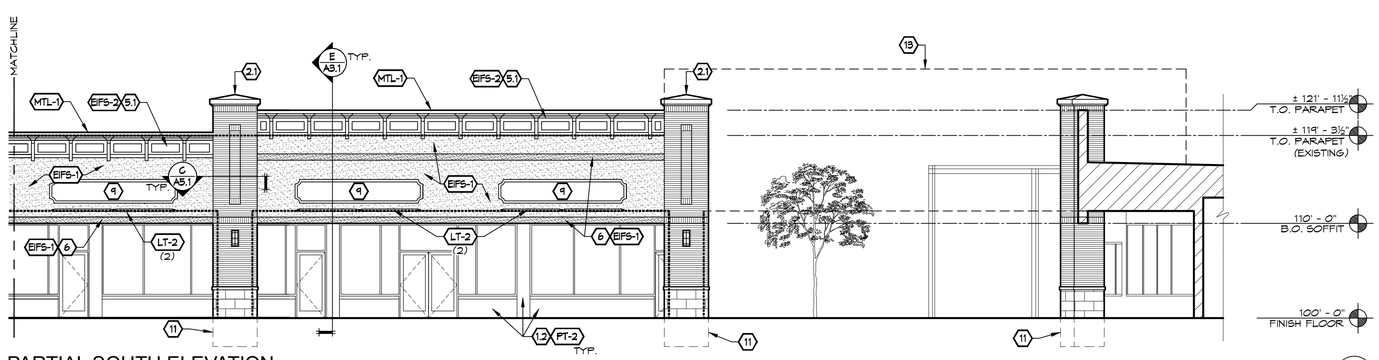

PARTIAL SOUTH ELEVATION

1/8" = 1'-0"

D

GENERAL NOTES

1. PIERS ARE AT EXISTING LOCATIONS UNLESS NOTED OTHERWISE.
2. PROVIDE JOINT SEALANT AT ALL CONTROL AND EXPANSION JOINTS, AT JOINTS BETWEEN DISSIMILAR MATERIALS, AND AS INDICATED. COLOR TO MATCH ADJACENT MATERIALS.
3. PROVIDE ADDRESS IDENTIFICATION AT FRONT AND REAR OF EACH TENANT SPACE PER OHIO FIRE CODE SECTION 505.1. TEXT SHALL BE 4" TALL MINIMUM.
4. PAINT EXISTING WOOD TRIM ABOVE STOREFRONTS AND ALL SOFFITS (PT-3).
5. PAINT EXISTING BRICK VENEER THROUGHOUT (PT-2). EXISTING STONE SILLS DO NOT GET PAINTED.
6. ALL EXISTING AND NEW EXTERIOR LIGHTING TO BE ON HOUSE PANEL.
7. PROVIDE CONTROL AND EXPANSION JOINTS IN EIFS AND THIN BRICK SYSTEMS IN ACCORDANCE WITH MANUFACTURER'S WRITTEN INSTRUCTIONS.

ELEVATION LEGEND

OUTLINE OF EXISTING ELEVATION - MODIFY AS REQUIRED.

EXISTING TO BE REMOVED

FINISH OR MATERIAL TAG - SEE EXTERIOR FINISH SCHEDULE, SHEET A0.10.

ELEVATION ALTERNATES

1. ALTERNATE 1: PROVIDE EIFS SYSTEM WITH BRICK PATTERN, TEXTURE, AND FINISH TO MATCH BRK-1 IN LIEU OF THIN BRICK PANEL SYSTEM (BRK-2) THROUGHOUT. ALIGN EIFS BRICK PATTERN WITH BRICK VENEER COURSING THROUGHOUT.

KEY NOTES

1. PAINT EXISTING ITEM:
   - 1.1. CONCRETE MASONRY UNITS.
   - 1.2. BRICK VENEER - TUCK POINT AS REQUIRED.
   - 1.3. PREFINISHED ALUMINUM DOWNSPOUT.
   - 1.4. PREFINISHED ALUMINUM GUTTER.
   - 1.5. HOLLOW METAL DOOR AND FRAME.
   - 1.6. CONCRETE STEPS, STOOP AND RAILING. PATCH AND REPAIR DAMAGED MASONRY AND CONCRETE AS REQUIRED.
   - 1.7. ELECTRIC METER SET AND DISCONNECT SWITCH.
   - 1.8. GAS METERS.
   - 1.9. METAL RAILING.
2. PIER - SEE DETAIL F/A5.0.
   - 2.1. TYPE A
   - 2.2. TYPE B
3. RECESSED BRICK PANEL AND SOLDIER COURSE. REGESS ½".
4. SOLDIER COURSE. PULL ½".
5. EIFS CORNICE.
   - 5.1. TYPE A - SEE G/A5.0.
   - 5.2. TYPE B - SEE J & K/A5.0.
   - 5.3. TYPE C - SEE A/A5.1.
6. EIFS ACCENT BAND.
7. MEDIUM STILE ALUMINUM AND GLASS DOOR TO MATCH EXISTING.
8. METAL LOUVER WITH BIRD-AND-INSECT SCREEN - SEE K/A5.1.
9. FUTURE SIGNAGE PANEL OR CHANNEL LETTER SIGN BY TENANT PER TENANT AGREEMENT. PROVIDE BLOCKING AS REQUIRED.
10. RELOCATED EXISTING DOWNSPOUT.
11. ADDITIONAL FOOTING FOR NEW VENEER AS REQUIRED - SEE 7/S3.0.
    - 11.1. NEW FOOTING - SEE 6/S3.0.
12. REMOVE EXISTING GUTTER THIS AREA.
13. REMOVE EXISTING CANOPY.
14. PILASTER - SEE DETAIL C/A5.0.
15. REMOVE EXISTING WINDOWS, VENEER AND BACKUP WALL THIS AREA.
16. ALIGN.

BRIDGE POINTE RETAIL CENTER IMPROVEMENTS

NEYER PROPERTIES

6400 - 6550 Riverside Drive
Dublin, Ohio 43017

COMMISSION NUMBER: 1205

TRIAD ARCHITECTS
936 Eastwind Drive, Suite 202
Columbus, Ohio 43081
Phone: (614) 942-1050
Fax: (614) 942-1059
main@triadarchitects.com

DATE: 9/25/2012 - PERMIT SET

SEAL: STATE OF OHIO — BRENT T. FOLEY 14892 — REGISTERED ARCHITECT

BRENT T. FOLEY, LIC. 14892
EXP: DEC 31, 2012

KEY PLAN

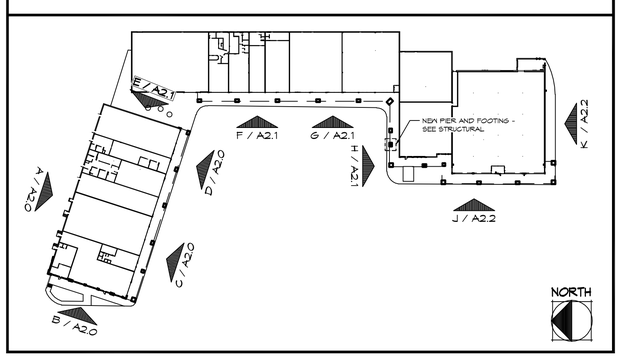

ELEVATIONS

DRAWN BY: AML
CHECKED BY: BTF/ZP

A2.0

P:\Pro-12\1205-Equity Bridge Pointe\100-Cad\20 Current Drawings\1205-Bridge Point-Elevations.dwg, 9/25/2012 10:28:46 AM

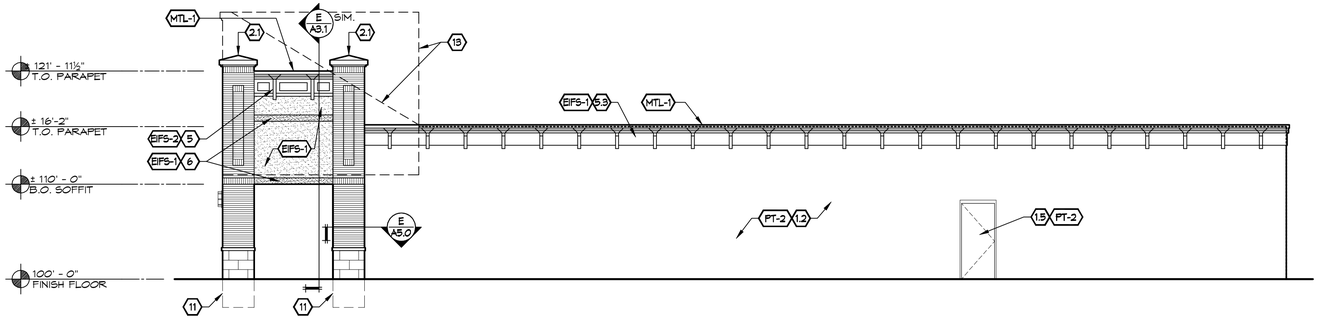

EAST ELEVATION

1/8" = 1'-0"

E

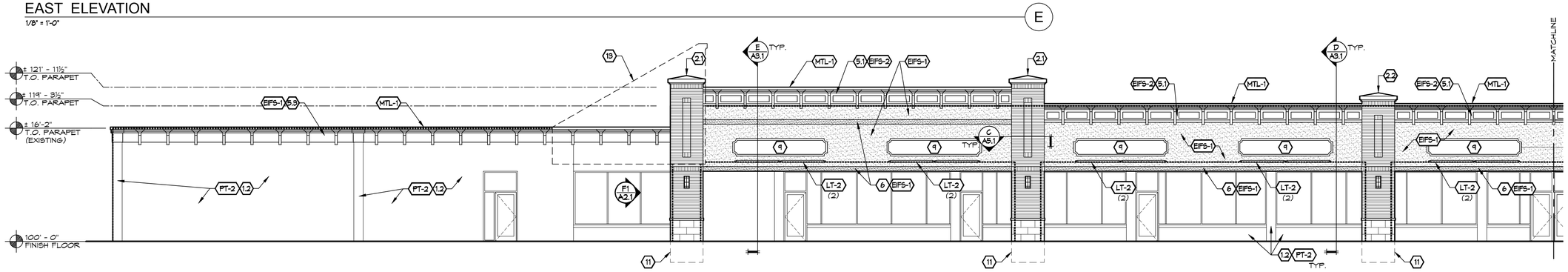

PARTIAL WEST ELEVATION

1/8" = 1'-0"

F

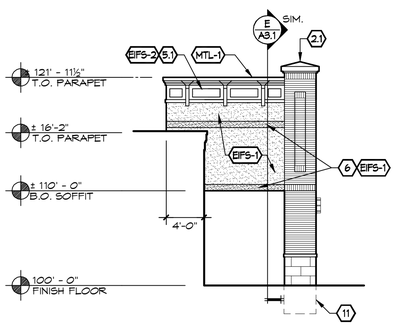

NORTH ELEVATION

1/8" = 1'-0"

F1

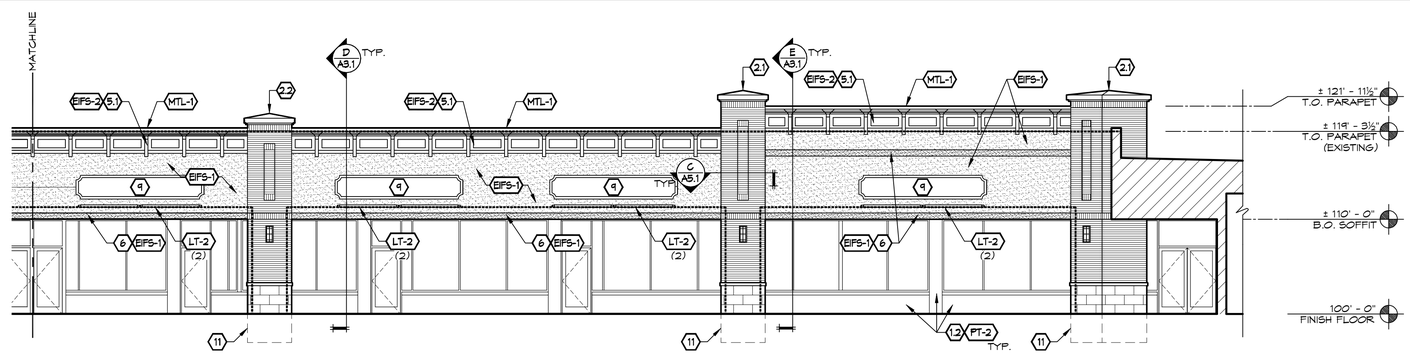

PARTIAL WEST ELEVATION

1/8" = 1'-0"

G

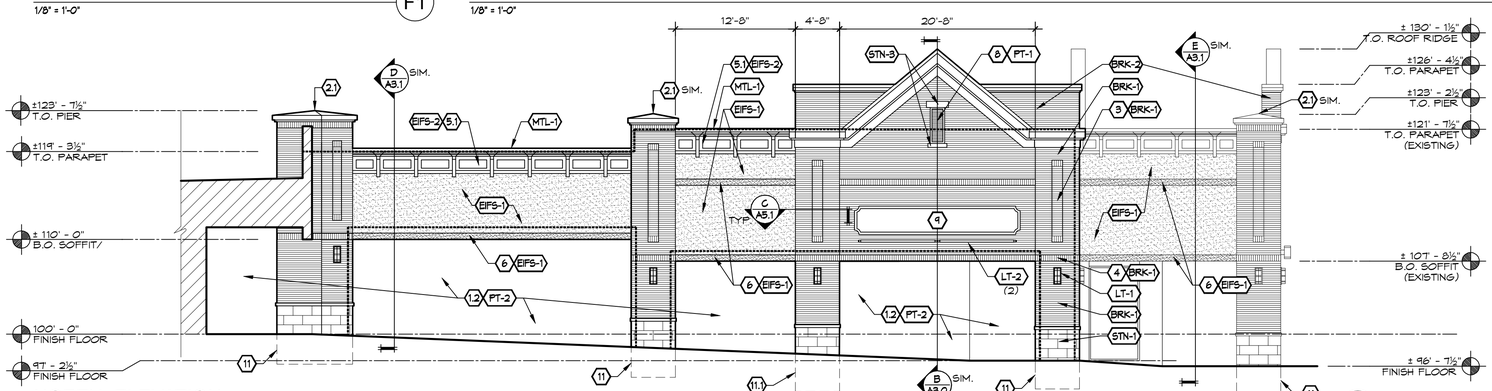

NORTH ELEVATION

1/8" = 1'-0"

H

P:\Pro-12\1205-Equity Bridge Pointe\100-Cad\20 Current Drawings\1205-Bridge PointElevations.dwg, 9/25/2012 10:28:53 AM

ELEVATION ALTERNATES

1. ALTERNATE 1: PROVIDE EIFS SYSTEM WITH BRICK PATTERN, TEXTURE, AND FINISH TO MATCH BRK-1 IN LIEU OF THIN BRICK PANEL SYSTEM (BRK-2) THROUGHOUT. ALIGN EIFS BRICK PATTERN WITH BRICK VENEER COURSING THROUGHOUT.

GENERAL NOTES

1. PIERS ARE AT EXISTING LOCATIONS UNLESS NOTED OTHERWISE.
2. PROVIDE JOINT SEALANT AT ALL CONTROL AND EXPANSION JOINTS, AT JOINTS BETWEEN DISSIMILAR MATERIALS, AND AS INDICATED. COLOR TO MATCH ADJACENT MATERIALS.
3. PROVIDE ADDRESS IDENTIFICATION AT FRONT AND REAR OF EACH TENANT SPACE PER OHIO FIRE CODE SECTION 505.1. TEXT SHALL BE 4" TALL MINIMUM.
4. PAINT EXISTING WOOD TRIM ABOVE STOREFRONTS AND ALL SOFFITS (PT-3).
5. PAINT EXISTING BRICK VENEER THROUGHOUT (PT-2). EXISTING STONE SILLS DO NOT GET PAINTED.
6. ALL EXISTING AND NEW EXTERIOR LIGHTING TO BE ON HOUSE PANEL.
7. PROVIDE CONTROL AND EXPANSION JOINTS IN EIFS AND THIN BRICK SYSTEMS IN ACCORDANCE WITH MANUFACTURER'S WRITTEN INSTRUCTIONS.

ELEVATION LEGEND

OUTLINE OF EXISTING ELEVATION - MODIFY AS REQUIRED.

EXISTING TO BE REMOVED

FINISH OR MATERIAL TAG - SEE EXTERIOR FINISH SCHEDULE, SHEET A0.10.

KEY NOTES

1. PAINT EXISTING ITEM:
   - 1.1. CONCRETE MASONRY UNITS.
   - 1.2. BRICK VENEER - TUCK POINT AS REQUIRED.
   - 1.3. PREFINISHED ALUMINUM DOWNSPOUT.
   - 1.4. PREFINISHED ALUMINUM GUTTER.
   - 1.5. HOLLOW METAL DOOR AND FRAME.
   - 1.6. CONCRETE STEPS, STOOP AND RAILING. PATCH AND REPAIR DAMAGED MASONRY AND CONCRETE AS REQUIRED.
   - 1.7. ELECTRIC METER SET AND DISCONNECT SWITCH.
   - 1.8. GAS METERS.
   - 1.9. METAL RAILING.
2. PIER - SEE DETAIL F/A5.0.
   - 2.1. TYPE A
   - 2.2. TYPE B
3. RECESSED BRICK PANEL AND SOLDIER COURSE. RECESS ½".
4. SOLDIER COURSE. PULL ½".
5. EIFS CORNICE.
   - 5.1. TYPE A - SEE G/A5.0.
   - 5.2. TYPE B - SEE J & K/A5.0.
   - 5.3. TYPE C - SEE A/A5.1.
6. EIFS ACCENT BAND.
7. MEDIUM STILE ALUMINUM AND GLASS DOOR TO MATCH EXISTING.
8. METAL LOUVER WITH BIRD-AND-INSECT SCREEN - SEE K/A5.1.
9. FUTURE SIGNAGE PANEL OR CHANNEL LETTER SIGN BY TENANT PER TENANT AGREEMENT. PROVIDE BLOCKING AS REQUIRED.
10. RELOCATED EXISTING DOWNSPOUT.
11. ADDITIONAL FOOTING FOR NEW VENEER AS REQUIRED - SEE 7/S3.0.
    - 11.1. NEW FOOTING - SEE 6/S3.0.
12. REMOVE EXISTING GUTTER THIS AREA.
13. REMOVE EXISTING CANOPY.
14. PILASTER - SEE DETAIL C/A5.0.
15. REMOVE EXISTING WINDOWS, VENEER AND BACKUP WALL THIS AREA.
16. ALIGN.

BRIDGE POINTE RETAIL CENTER IMPROVEMENTS

NEYER PROPERTIES

6400 - 6550 Riverside Drive
Dublin, Ohio 43017

COMMISSION NUMBER: 1205

TRIAD ARCHITECTS
936 Eastwind Drive, Suite 202
Columbus, Ohio 43081
Phone: (614) 942-1050
Fax: (614) 942-1059
main@triadarchitects.com

DATE:
9/25/2012 - PERMIT SET

SEAL:
STATE OF OHIO
BRENT T. FOLEY
14892
REGISTERED ARCHITECT

BRENT T. FOLEY, LIC. 14892
EXP: DEC 31, 2012

KEY PLAN

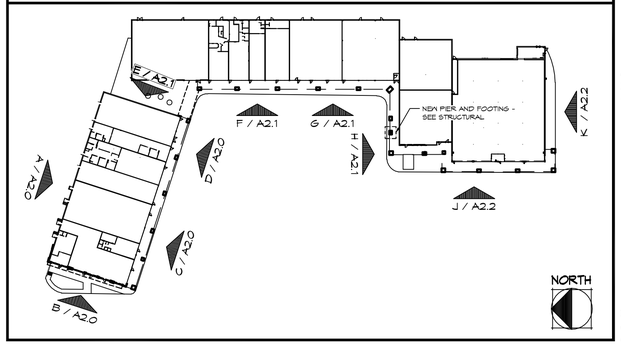

ELEVATIONS

DRAWN BY: AML
CHECKED BY: BTF/ZP

A2.1

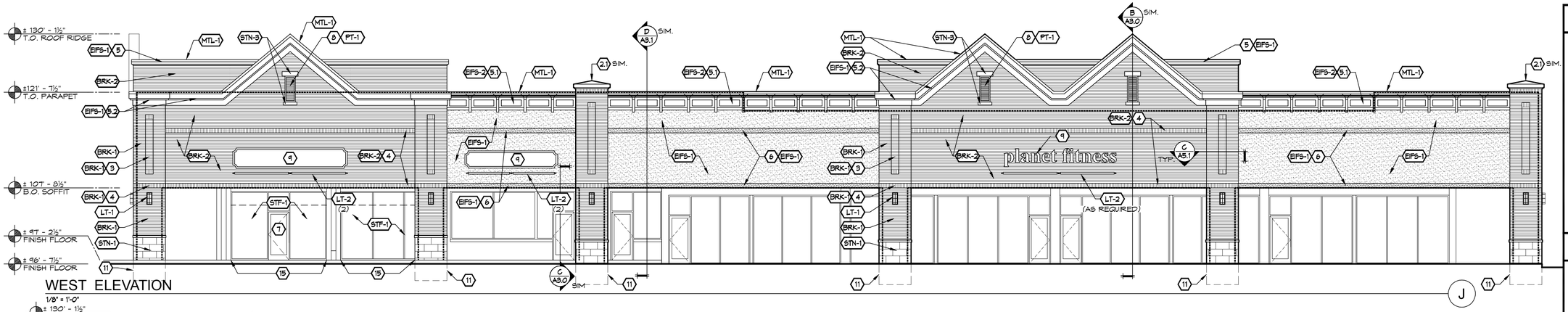

WEST ELEVATION

1/8" = 1'-0"

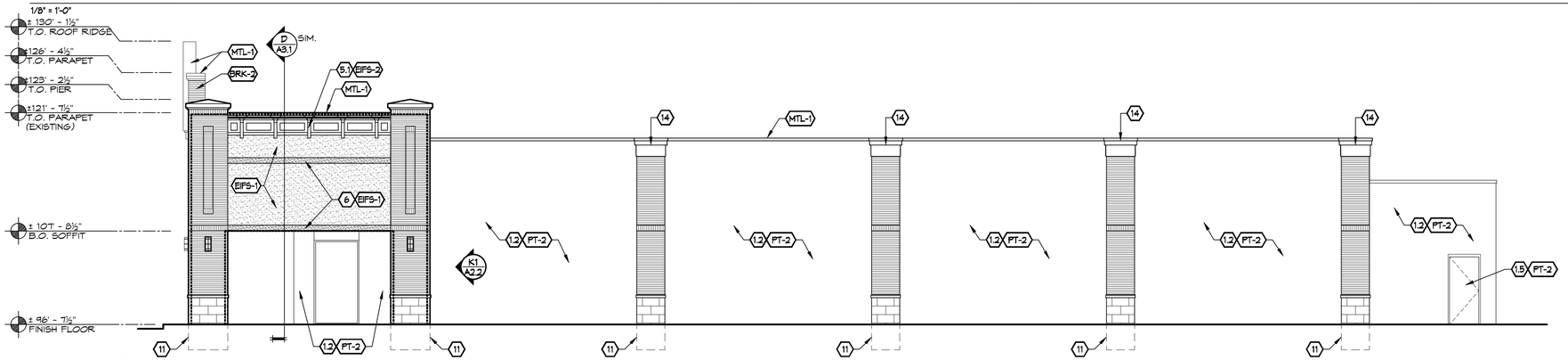

SOUTH ELEVATION

1/8" = 1'-0"

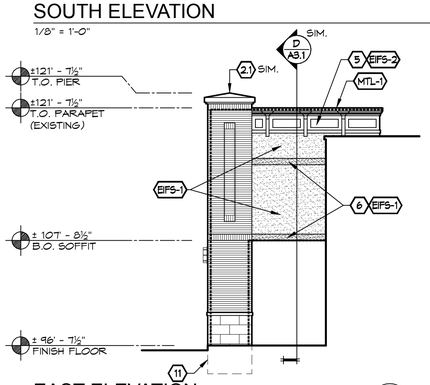

EAST ELEVATION

1/8" = 1'-0"

GENERAL NOTES

1. PIERS ARE AT EXISTING LOCATIONS UNLESS NOTED OTHERWISE.
2. PROVIDE JOINT SEALANT AT ALL CONTROL AND EXPANSION JOINTS, AT JOINTS BETWEEN DISSIMILAR MATERIALS, AND AS INDICATED. COLOR TO MATCH ADJACENT MATERIALS.
3. PROVIDE ADDRESS IDENTIFICATION AT FRONT AND REAR OF EACH TENANT SPACE PER OHIO FIRE CODE SECTION 505.1. TEXT SHALL BE 4" TALL MINIMUM.
4. PAINT EXISTING WOOD TRIM ABOVE STOREFRONTS AND ALL SOFFITS (PT-3).
5. PAINT EXISTING BRICK VENEER THROUGHOUT (PT-2). EXISTING STONE SILLS DO NOT GET PAINTED.
6. ALL EXISTING AND NEW EXTERIOR LIGHTING TO BE ON HOUSE PANEL.
7. PROVIDE CONTROL AND EXPANSION JOINTS IN EIFS AND THIN BRICK SYSTEMS IN ACCORDANCE WITH MANUFACTURER'S WRITTEN INSTRUCTIONS.

ELEVATION LEGEND

OUTLINE OF EXISTING ELEVATION - MODIFY AS REQUIRED.

EXISTING TO BE REMOVED

FINISH OR MATERIAL TAG - SEE EXTERIOR FINISH SCHEDULE, SHEET A0.10.

ELEVATION ALTERNATES

1. ALTERNATE 1: PROVIDE EIFS SYSTEM WITH BRICK PATTERN, TEXTURE, AND FINISH TO MATCH BRK-1 IN LIEU OF THIN BRICK PANEL SYSTEM (BRK-2) THROUGHOUT. ALIGN EIFS BRICK PATTERN WITH BRICK VENEER COURSING THROUGHOUT.

KEY NOTES

1. PAINT EXISTING ITEM:
   - 1.1. CONCRETE MASONRY UNITS.
   - 1.2. BRICK VENEER - TUCK POINT AS REQUIRED.
   - 1.3. PREFINISHED ALUMINUM DOWNSPOUT.
   - 1.4. PREFINISHED ALUMINUM GUTTER.
   - 1.5. HOLLOW METAL DOOR AND FRAME.
   - 1.6. CONCRETE STEPS, STOOP AND RAILING. PATCH AND REPAIR DAMAGED MASONRY AND CONCRETE AS REQUIRED.
   - 1.7. ELECTRIC METER SET AND DISCONNECT SWITCH.
   - 1.8. GAS METERS.
   - 1.9. METAL RAILING.
2. PIER - SEE DETAIL F/A5.0.
   - 2.1. TYPE A
   - 2.2. TYPE B
3. RECESSED BRICK PANEL AND SOLDIER COURSE. REGESS ½".
4. SOLDIER COURSE. PULL ½".
5. EIFS CORNICE.
   - 5.1. TYPE A - SEE G/A5.0.
   - 5.2. TYPE B - SEE J & K/A5.0.
   - 5.3. TYPE C - SEE A/A5.1.
6. EIFS ACCENT BAND.
7. MEDIUM STILE ALUMINUM AND GLASS DOOR TO MATCH EXISTING.
8. METAL LOUVER WITH BIRD-AND-INSECT SCREEN - SEE K/A5.1.
9. FUTURE SIGNAGE PANEL OR CHANNEL LETTER SIGN BY TENANT PER TENANT AGREEMENT. PROVIDE BLOCKING AS REQUIRED.
10. RELOCATED EXISTING DOWNSPOUT.
11. ADDITIONAL FOOTING FOR NEW VENEER AS REQUIRED - SEE 7/S3.0.
    - 11.1. NEW FOOTING - SEE 6/S3.0.
12. REMOVE EXISTING GUTTER THIS AREA.
13. REMOVE EXISTING CANOPY.
14. PILASTER - SEE DETAIL C/A5.0.
15. REMOVE EXISTING WINDOWS, VENEER AND BACKUP WALL THIS AREA.
16. ALIGN.

ELEVATION DATA - OVERALL

MATERIAL	MATERIAL AREA (SF)	PERCENTAGE (%)
BRICK (FULL AND THIN)	6,744	22%
EIFS (WALL AND CORNICES)	7,906	25%
PAINT (EXISTING ELEMENTS)	10,017	32%
STONE	833	3%
STOREFRONT	5,480	18%

ELEVATION DATA - ELEVATION A

MATERIAL	MATERIAL AREA (SF)	PERCENTAGE (%)
BRICK (FULL AND THIN)	365	11%
EIFS (WALL AND CORNICES)	50	1%
PAINT (EXISTING ELEMENTS)	2,920	84%
STONE	130	4%
STOREFRONT	0	0%

ELEVATION DATA - ELEVATION B

MATERIAL	MATERIAL AREA (SF)	PERCENTAGE (%)
BRICK (FULL AND THIN)	1,050	39%
EIFS (WALL AND CORNICES)	741	28%
PAINT (EXISTING ELEMENTS)	0	0%
STONE	94	4%
STOREFRONT	783	29%

ELEVATION DATA - ELEVATION C/D

MATERIAL	MATERIAL AREA (SF)	PERCENTAGE (%)
BRICK (FULL AND THIN)	1,383	28%
EIFS (WALL AND CORNICES)	1,573	31%
PAINT (EXISTING ELEMENTS)	470	9%
STONE	110	2%
STOREFRONT	1,482	30%

NOTE:
MATERIAL AREAS AND PERCENTAGES ARE OF VISIBLE ELEMENTS IN ELEVATIONS SHOWN ON THESE SHEETS.
FIGURES ARE NOT TO BE CONSIDERED AS QUANTITY TAKE-OFFS.

ELEVATION DATA - ELEVATION E

MATERIAL	MATERIAL AREA (SF)	PERCENTAGE (%)
BRICK (FULL AND THIN)	127	7%
EIFS (WALL AND CORNICES)	311	17%
PAINT (EXISTING ELEMENTS)	1,374	75%
STONE	30	2%
STOREFRONT	0	0%

ELEVATION DATA - ELEVATION F/G

MATERIAL	MATERIAL AREA (SF)	PERCENTAGE (%)
BRICK (FULL AND THIN)	550	9%
EIFS (WALL AND CORNICES)	2,394	37%
PAINT (EXISTING ELEMENTS)	1,623	25%
STONE	137	2%
STOREFRONT	1,697	27%

ELEVATION DATA - ELEVATION F1

MATERIAL	MATERIAL AREA (SF)	PERCENTAGE (%)
BRICK (FULL AND THIN)	64	32%
EIFS (WALL AND CORNICES)	124	61%
PAINT (EXISTING ELEMENTS)	0	0%
STONE	15	7%
STOREFRONT	0	0%

ELEVATION DATA - ELEVATION H

MATERIAL	MATERIAL AREA (SF)	PERCENTAGE (%)
BRICK (FULL AND THIN)	873	34%
EIFS (WALL AND CORNICES)	785	30%
PAINT (EXISTING ELEMENTS)	830	32%
STONE	110	4%
STOREFRONT	0	0%

ELEVATION DATA - ELEVATION J

MATERIAL	MATERIAL AREA (SF)	PERCENTAGE (%)
BRICK (FULL AND THIN)	1,908	35%
EIFS (WALL AND CORNICES)	1,657	30%
PAINT (EXISTING ELEMENTS)	300	6%
STONE	117	2%
STOREFRONT	1,465	27%

ELEVATION DATA - ELEVATION K

MATERIAL	MATERIAL AREA (SF)	PERCENTAGE (%)
BRICK (FULL AND THIN)	424	13%
EIFS (WALL AND CORNICES)	271	8%
PAINT (EXISTING ELEMENTS)	2,500	75%
STONE	90	3%
STOREFRONT	53	2%

ELEVATION DATA - ELEVATION K1

MATERIAL	MATERIAL AREA (SF)	PERCENTAGE (%)
BRICK (FULL AND THIN)	103	41%
EIFS (WALL AND CORNICES)	127	50%
PAINT (EXISTING ELEMENTS)	0	0%
STONE	22	9%
STOREFRONT	0	0%

BRIDGE POINTE
RETAIL CENTER
IMPROVEMENTS

NEYER PROPERTIES

6400 - 6550 Riverside Drive
Dublin, Ohio 43017

COMMISSION NUMBER: 1205

TRIAD ARCHITECTS
936 Eastwind Drive, Suite 202
Columbus, Ohio 43081
Phone: (614) 942-1050
Fax: (614) 942-1059
main@triadarchitects.com

DATE:
9/25/2012 - PERMIT SET

SEAL:
STATE OF OHIO
BRENT T. FOLEY
14892
REGISTERED ARCHITECT

BRENT T. FOLEY, LIC. 14892
EXP: DEC 31, 2012

ELEVATIONS AND ELEVATION DATA

DRAWN BY: AML
CHECKED BY: BTF/ZP

A2.2

P:\Pro-12\1205-Equity Bridge Pointe\100-Cad\20 Current Drawings\1205-Bridge Point-Elevations.dwg, 9/25/2012 10:28:59 AM

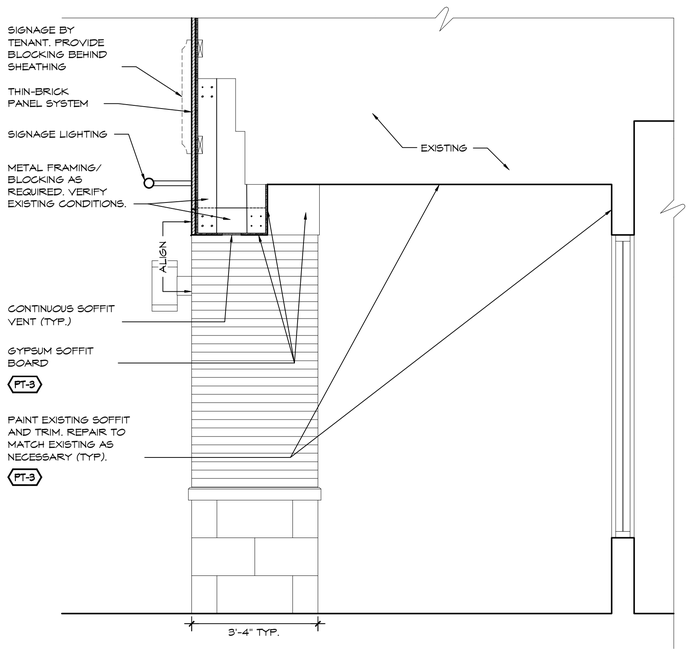

TYPICAL SECTION WITH SET-BACK PIER (C)

1/2" = 1'-0"

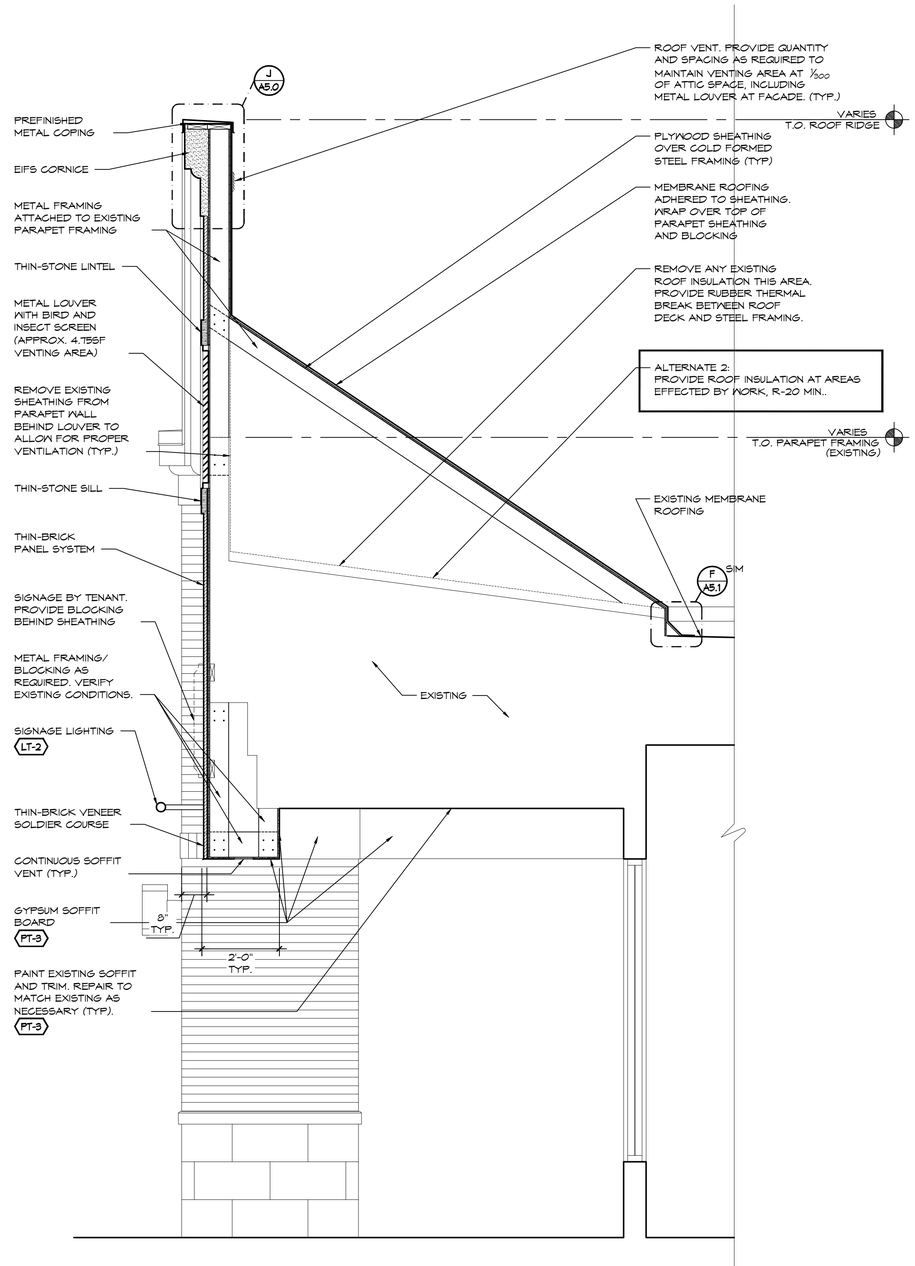

TYPICAL SECTION THRU DECORATIVE GABLE (B)

1/2" = 1'-0"

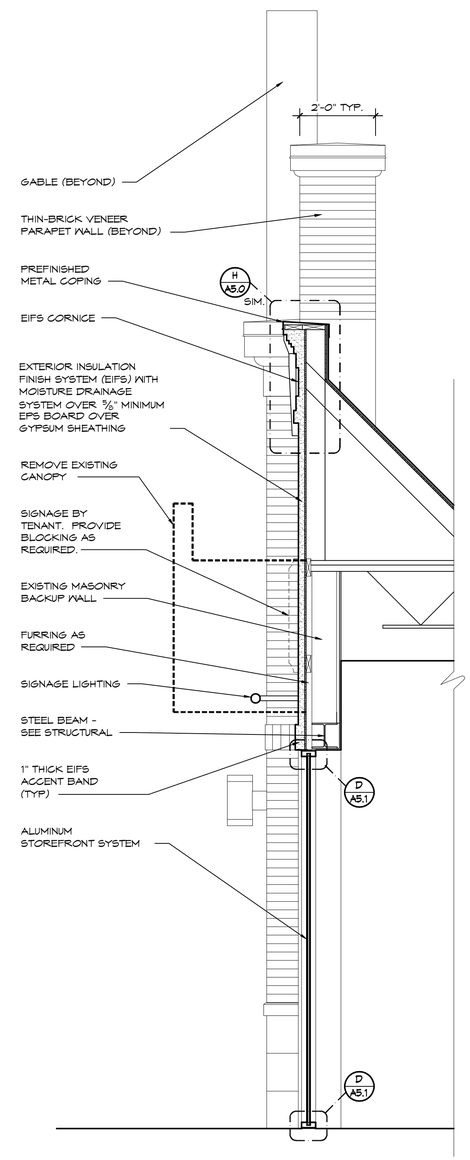

SECTION THRU WEST ELEVATION (A)

1/2" = 1'-0"

BRIDGE POINTE RETAIL CENTER IMPROVEMENTS

NEYER PROPERTIES

6400 - 6550 Riverside Drive
Dublin, Ohio 43017

COMMISSION NUMBER: 1205

TRIAD ARCHITECTS
936 Eastwind Drive, Suite 202
Columbus, Ohio 43081
Phone: (614) 942-1050
Fax: (614) 942-1059
main@triadarchitects.com

DATE:
9/25/2012 - PERMIT SET

SEAL:
STATE OF OHIO
BRENT T. FOLEY
14892
REGISTERED ARCHITECT

BRENT T. FOLEY, LIC. 14892
EXP: DEC 31, 2012

SECTIONS

DRAWN BY: AML
CHECKED BY: BTF/ZP

A3.0

P:\Pro-12\1205-Equity Bridge Pointe\100-Cad\20 Current Drawings\1205-Bridge Point-Sections.dwg, 9/25/2012 10:29:04 AM

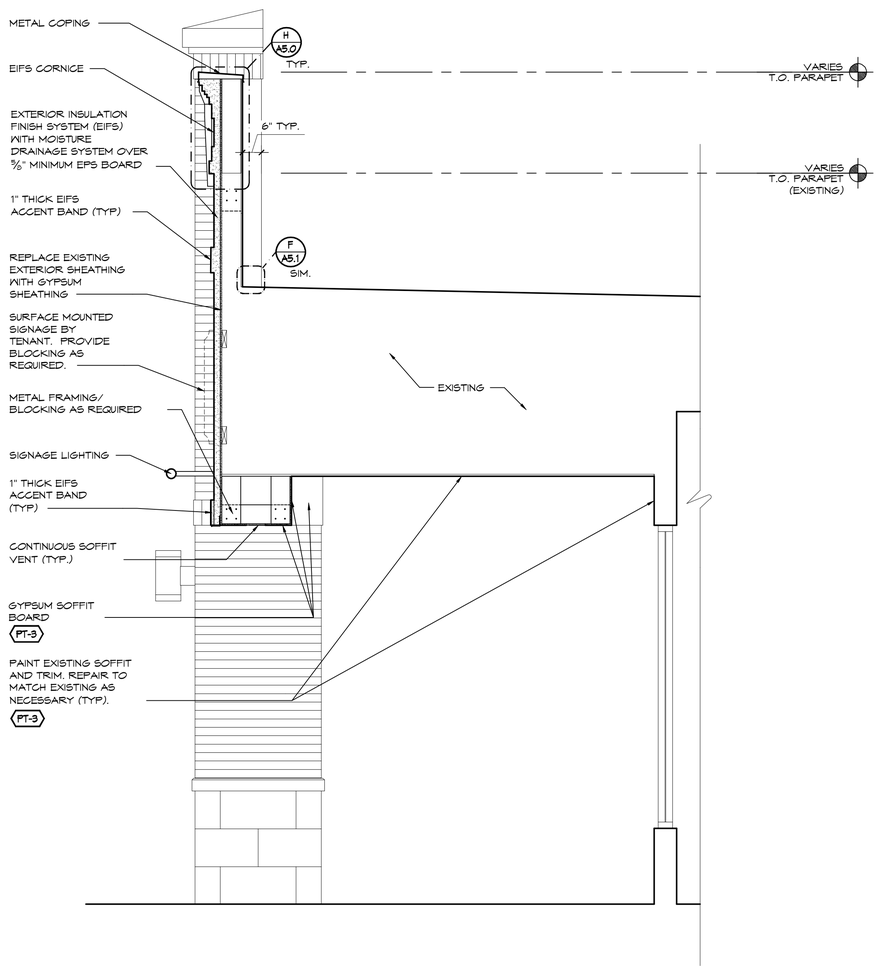

TYPICAL EXTENDED PARAPET SECTION

1/2" = 1'-0"

E

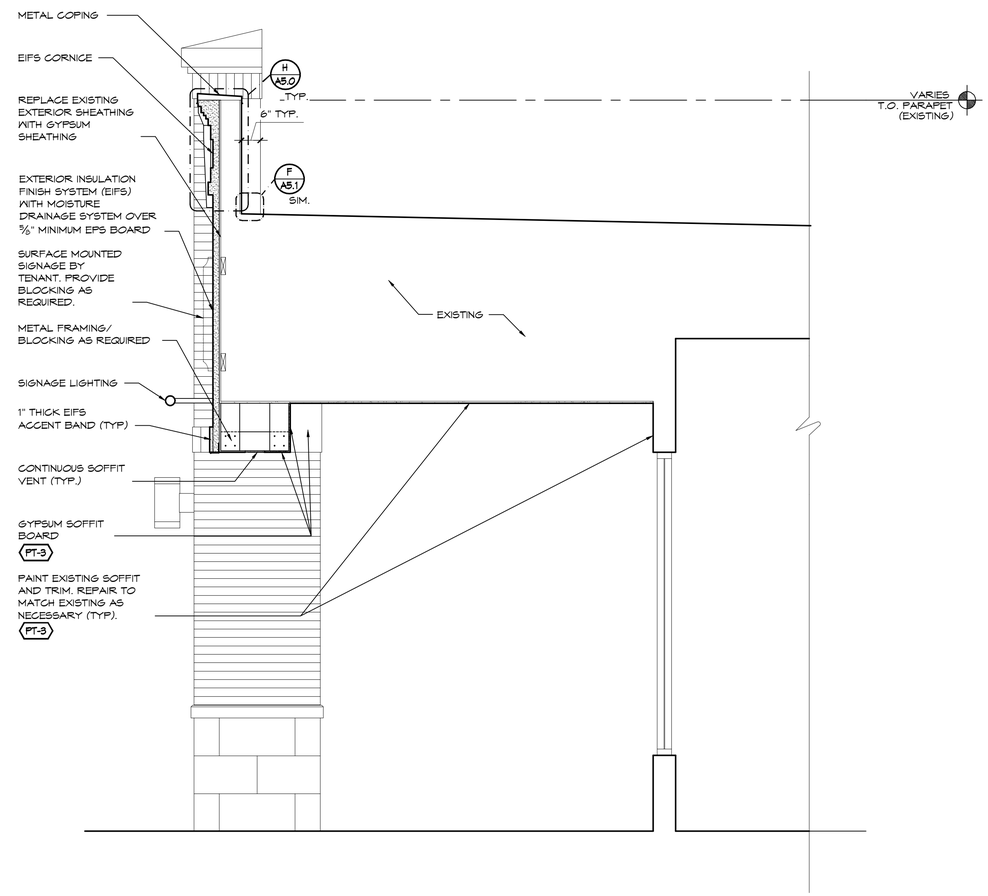

TYPICAL PARAPET SECTION

1/2" = 1'-0"

D

BRIDGE POINTE
RETAIL CENTER
IMPROVEMENTS

NEYER PROPERTIES

6400 - 6550 Riverside Drive
Dublin, Ohio 43017

COMMISSION NUMBER: 1205

TRIAD ARCHITECTS
936 Eastwind Drive, Suite 202
Columbus, Ohio 43081
Phone: (614) 942-1050
Fax: (614) 942-1059
main@triadarchitects.com

DATE:
9/25/2012 - PERMIT SET

SEAL:
STATE OF OHIO
BRENT T. FOLEY
14892
REGISTERED ARCHITECT

BRENT T. FOLEY, LIC. 14892
EXP: DEC 31, 2012

SECTIONS

DRAWN BY: AML
CHECKED BY: BTF/ZP

A3.1

P:\Pro-12\1205-Equity Bridge Pointe\100-Cad\20 Current Drawings\1205-Bridge Point-Sections.dwg, 9/25/2012 10:29:06 AM

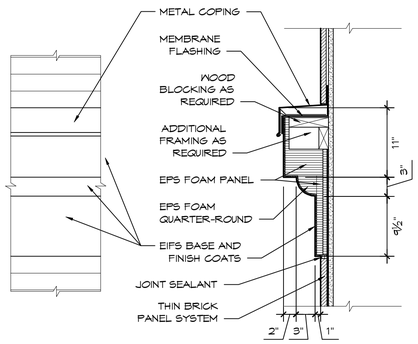

EIFS CORNICE TYPE B - CONDITION 2 ELEVATION AND DETAIL (K)

1" = 1'-0"

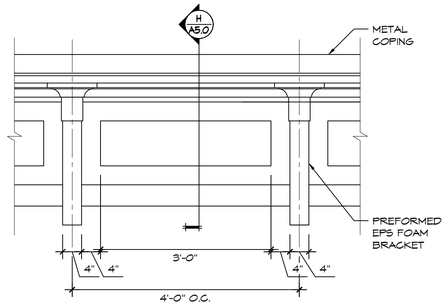

EIFS CORNICE TYPE A ELEVATION (G)

3/4" = 1'-0"

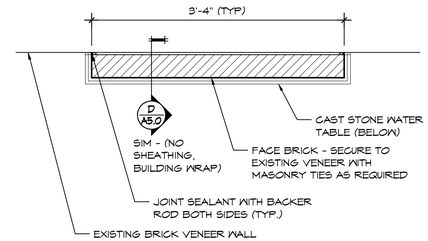

TYPICAL PILASTER PLAN DETAIL (E)

1" = 1'-0"

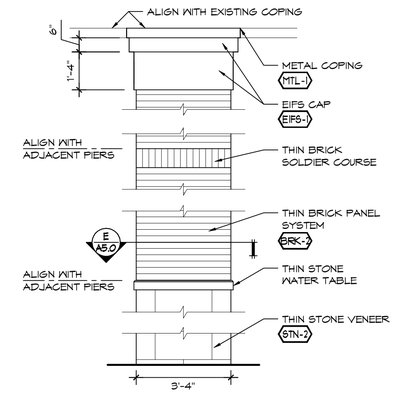

TYPICAL PILASTER ELEVATION DETAIL (C)

3/8" = 1'-0"

GENERAL FLASHING NOTES

1. LAP END JOINTS (INCLUDING END DAMS) OF THROUGH WALL FLASHING AND SEAL WITH ADHESIVE SEALANT OR TAPE AS RECOMMENDED BY THE FLASHING MANUFACTURER.
2. INSTALL DRIP EDGE (WHERE INDICATED) BENEATH THE FLASHING AT EXTERIOR FACE OF WALL. ADHERE FLASHING TO TOP OF DRIP EDGE.
3. DRIP EDGE JOINTS: OVERLAP THE TWO SECTIONS OF DRIP EDGES 2" AND FULL BED OVERLAP IN SEALANT.
4. INSTALL END DAMS AT ALL THROUGH WALL FLASHING TERMINATIONS UNLESS NOTED.
5. ISOLATE DISSIMILAR METALS FROM CONTACT WITH EACH OTHER.
6. PROVIDE THROUGH-WALL FLASHING AT ALL LOCATIONS WHERE AIR SPACE IN CAVITY WALL IS BRIDGED.
7. KEEP CAVITIES CLEAN OF MORTAR DROPPINGS AND OTHER MATERIAL.
8. INSTALL WEEPS IN HEAD JOINTS IN EXTERIOR WYTHES OF FIRST COURSE OF MASONRY IMMEDIATELY ABOVE EMBEDDED FLASHING.
9. ENSURE THAT NO MORTAR COMES IN CONTACT WITH DRIP EDGES. COAT WITH SELF-ADHERING MEMBRANE.
10. EIFS AND THIN BRICK SYSTEMS: PROVIDE FLASHING IN ACCORDANCE WITH MANUFACTURER'S WRITTEN INSTRUCTIONS

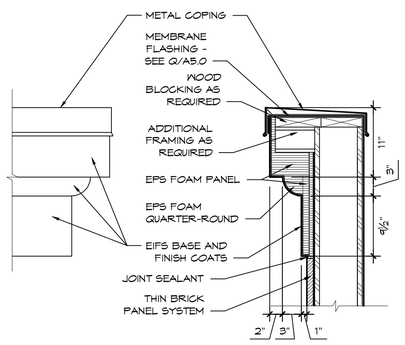

EIFS CORNICE TYPE B - CONDITION 1 ELEVATION AND DETAIL (J)

1" = 1'-0"

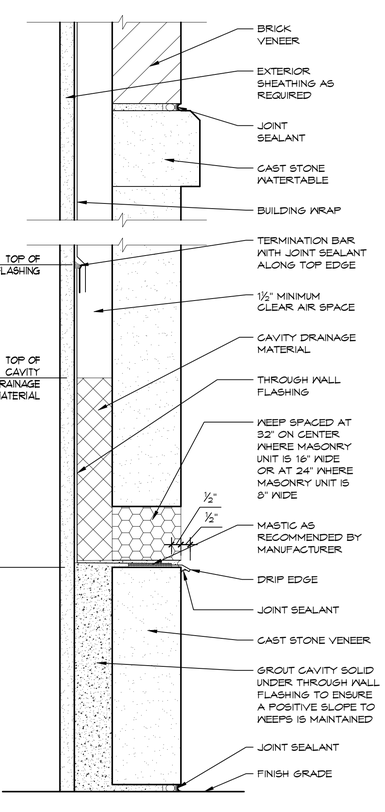

TYPICAL DETAIL AT PIER BASE (D)

3" = 1'-0"

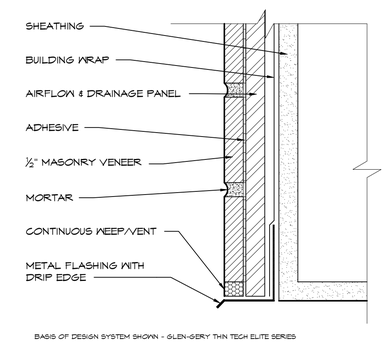

TYPICAL THIN-BRICK VENEER SYSTEM DETAIL (B)

6" = 1'-0"

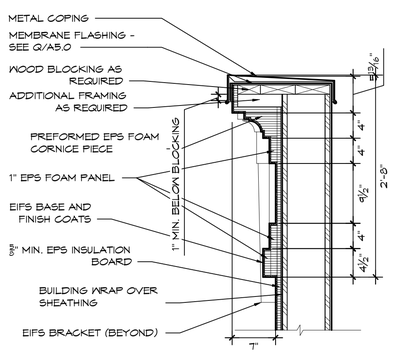

EIFS CORNICE TYPE A SECTION (H)

1" = 1'-0"

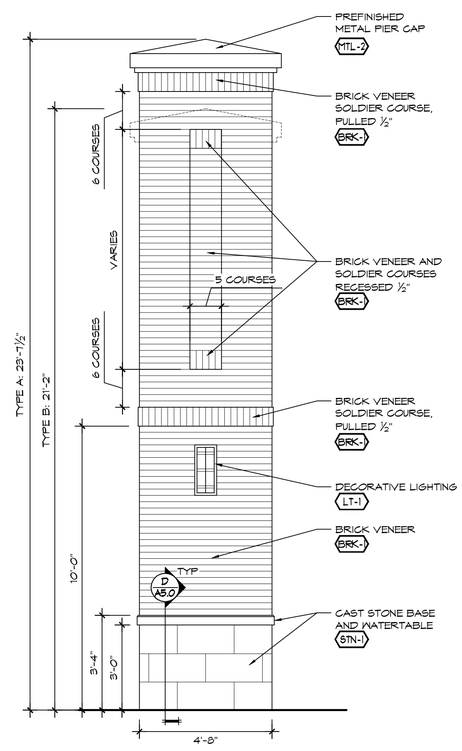

TYPICAL PIER ELEVATION DETAIL (F)

3/8" = 1'-0"

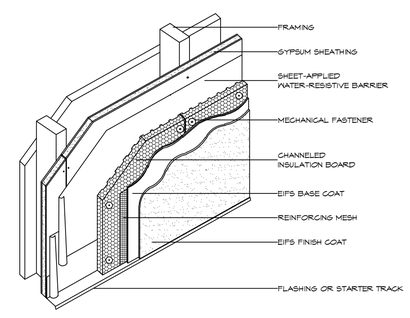

TYPICAL WATER-DRAINAGE EIFS SYSTEM ISOMETRIC (A)

1 1/2" = 1'-0"

BRIDGE POINTE RETAIL CENTER IMPROVEMENTS

NEYER PROPERTIES

6400 - 6550 Riverside Drive
Dublin, Ohio 43017

COMMISSION NUMBER: 1205

TRIAD ARCHITECTS
936 Eastwind Drive, Suite 202
Columbus, Ohio 43081
Phone: (614) 942-1050
Fax: (614) 942-1059
main@triadarchitects.com

DATE:
9/25/2012 - PERMIT SET

SEAL:
STATE OF OHIO
BRENT T. FOLEY
14892
REGISTERED ARCHITECT

BRENT T. FOLEY, LIC. 14892
EXP: DEC 31, 2012

DETAILS

DRAWN BY: AML
CHECKED BY: BTF/ZP

A5.0

P:\Pro-12\1205-Equity Bridge Pointe\100-Cad\20 Current Drawings\1205-Bridge Point-Details.dwg, 9/25/2012 10:29:08 AM

GENERAL FLASHING NOTES

1. LAP END JOINTS (INCLUDING END DAMS) OF THROUGH WALL FLASHING AND SEAL WITH ADHESIVE SEALANT OR TAPE AS RECOMMENDED BY THE FLASHING MANUFACTURER.
2. INSTALL DRIP EDGE (WHERE INDICATED) BENEATH THE FLASHING AT EXTERIOR FACE OF WALL. ADHERE FLASHING TO TOP OF DRIP EDGE.
3. DRIP EDGE JOINTS: OVERLAP THE TWO SECTIONS OF DRIP EDGES 2" AND FULL BED OVERLAP IN SEALANT.
4. INSTALL END DAMS AT ALL THROUGH WALL FLASHING TERMINATIONS UNLESS NOTED.
5. ISOLATE DISSIMILAR METALS FROM CONTACT WITH EACH OTHER.
6. PROVIDE THROUGH-WALL FLASHING AT ALL LOCATIONS WHERE AIR SPACE IN CAVITY WALL IS BRIDGED.
7. KEEP CAVITIES CLEAN OF MORTAR DROPPINGS AND OTHER MATERIAL.
8. INSTALL WEEPS IN HEAD JOINTS IN EXTERIOR WYTHES OF FIRST COURSE OF MASONRY IMMEDIATELY ABOVE EMBEDDED FLASHING.
9. ENSURE THAT NO MORTAR COMES IN CONTACT WITH DRIP EDGES. COAT WITH SELF-ADHERING MEMBRANE.
10. EIFS AND THIN BRICK SYSTEMS: PROVIDE FLASHING IN ACCORDANCE WITH MANUFACTURER'S WRITTEN INSTRUCTIONS

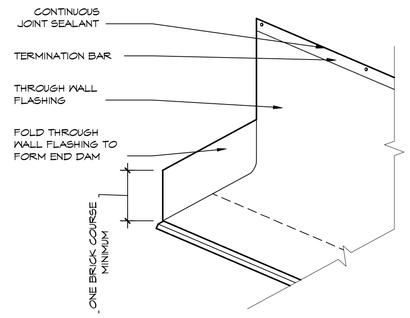

TYPICAL THROUGH WALL FLASHING END DAM DETAIL (J)
3" = 1'-0"

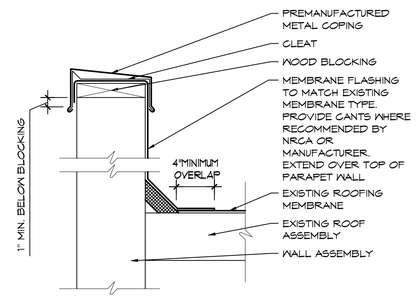

TYPICAL COPING DETAIL AT EXISTING MEMBRANE ROOF (F)
1-1/2" = 1'-0"

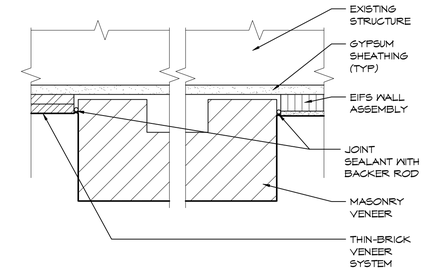

TYPICAL MASONRY AND EIFS JOINT DETAIL AT PIERS (C)
3" = 1'-0"

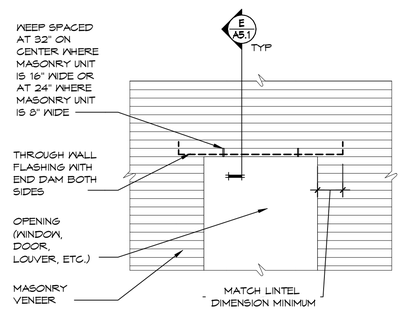

TYPICAL THROUGH WALL FLASHING ELEVATION DETAIL AT OPENINGS (H)
1/2" = 1'-0"

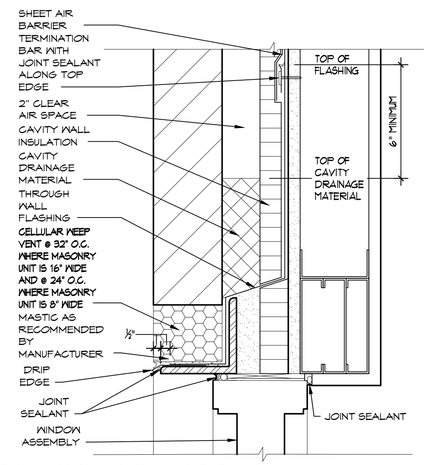

TYPICAL OPENING HEAD DETAIL AT METAL STUD BACKUP WALL (E)
3" = 1'-0"

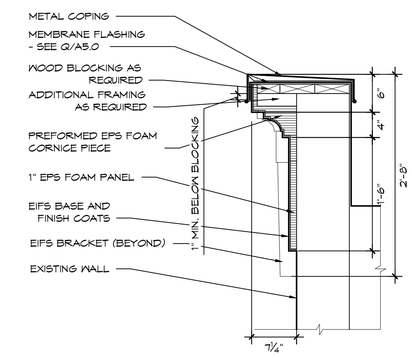

EIFS CORNICE TYPE C DETAIL (B)
1" = 1'-0"

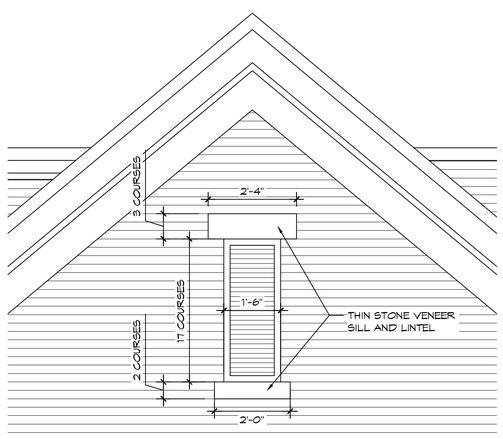

TYPICAL LOUVER ELEVATION DETAIL (K)
1/2" = 1'-0"

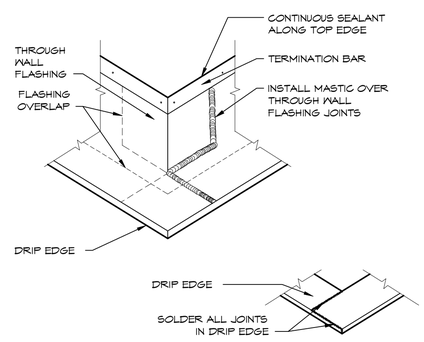

TYPICAL THROUGH-WALL FLASHING CORNER DETAILS (G)
1-1/2" = 1'-0"

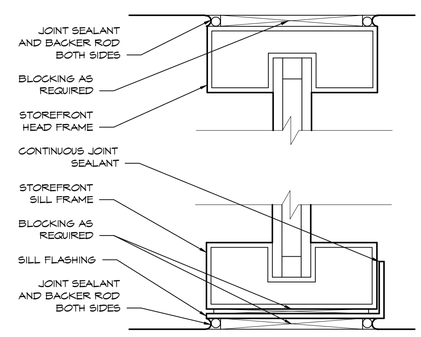

TYPICAL STOREFRONT HEAD AND SILL DETAIL (D)
6" = 1'-0"

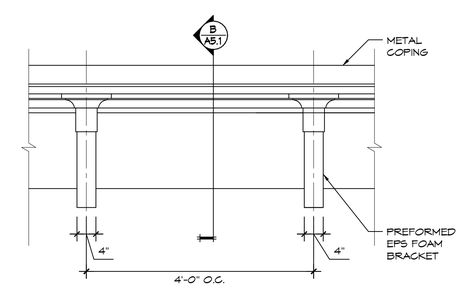

EIFS CORNICE TYPE C ELEVATION (A)
3/4" = 1'-0"

BRIDGE POINTE RETAIL CENTER IMPROVEMENTS

NEYER PROPERTIES

6400 - 6550 Riverside Drive
Dublin, Ohio 43017

COMMISSION NUMBER: 1205

TRIAD ARCHITECTS
936 Eastwind Drive, Suite 202
Columbus, Ohio 43081
Phone: (614) 942-1050
Fax: (614) 942-1059
main@triadarchitects.com

DATE: 9/25/2012 - PERMIT SET

SEAL: STATE OF OHIO BRENT T. FOLEY 14892 REGISTERED ARCHITECT

BRENT T. FOLEY, LIC. 14892
EXP: DEC 31, 2012

DETAILS

DRAWN BY: AML
CHECKED BY: BTF/ZP

A5.1

P:\Pro-12\1205-Equity Bridge Pointe\100-Cad\20 Current Drawings\1205-Bridge Point-Details.dwg, 9/25/2012 10:29:12 AM

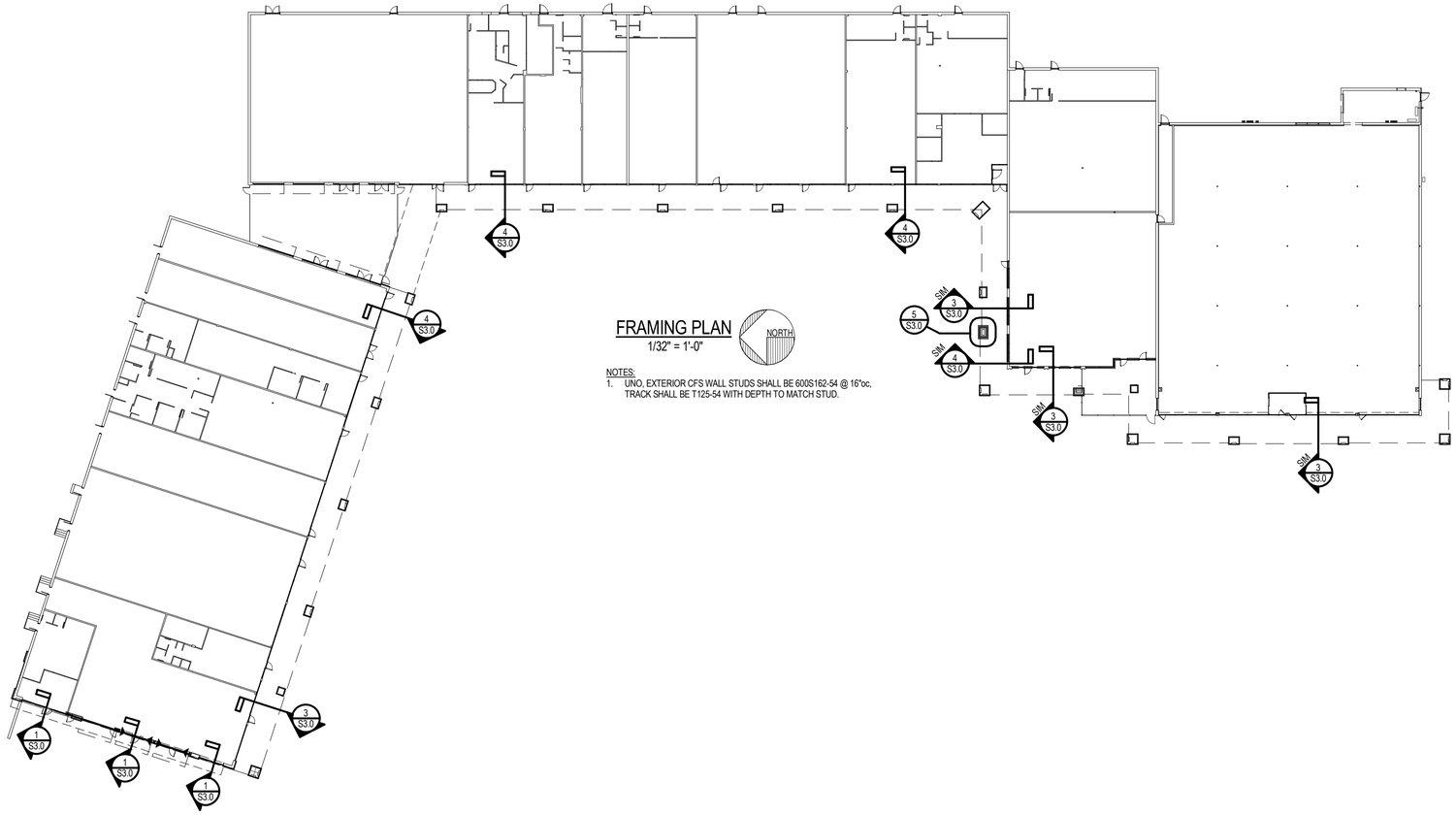

FRAMING PLAN

1/32" = 1'-0"

NORTH

NOTES:

1. UNO, EXTERIOR CFS WALL STUDS SHALL BE 600S162-54 @ 16"oc, TRACK SHALL BE T125-54 WITH DEPTH TO MATCH STUD.

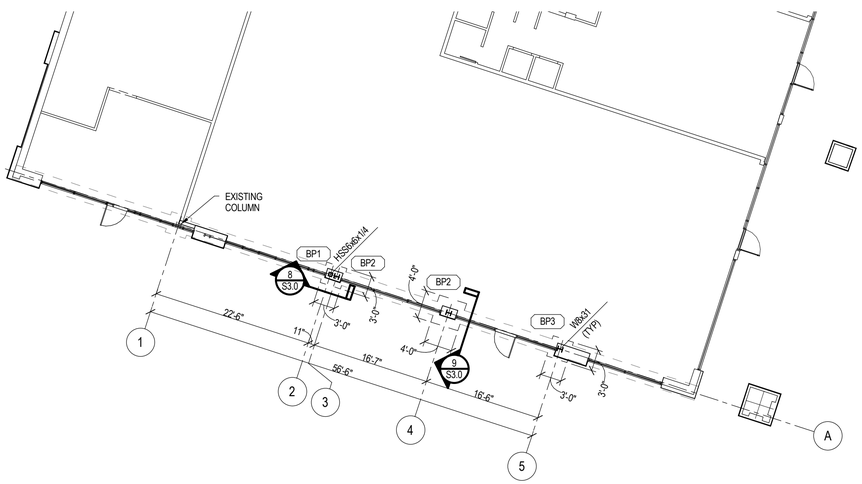

ENLARGED FOUNDATION PLAN

3/32" = 1'-0"

NORTH

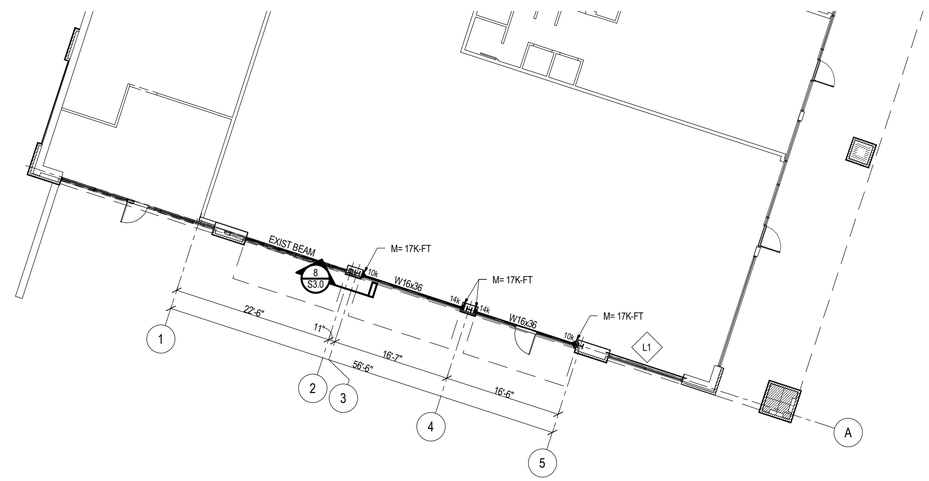

ENLARGED FRAMING PLAN

3/32" = 1'-0"

NORTH

ABBREVIATIONS

B/ = BOTTOM OF
BLDG = BUILDING
BRG = BEARING
CFS = COLD-FORMED STEEL
CJ = CONTROL JOINT
CL = CENTER LINE
CLR = CLEAR
CMU = CONCRETE MASONRY UNIT
COL = COLUMN
CONT = CONTINUOUS
DIA OR ø = DIAMETER
DEG OR ° = DEGREE
EA = EACH
EF = EACH FACE
EL = ELEVATION
EMB = EMBEDMENT
EQ = EQUAL
EXIST = EXISTING
EXP = EXPANSION
FDN = FOUNDATION
FS = FAR SIDE
FTG = FOOTING
GA = GAGE
GALV = GALVANIZED
GT = GIRDER TRUSS
HORIZ = HORIZONTAL
JST BRG = JOIST BEARING
LDH = LONG DIMENSION HORIZONTAL
LDV = LONG DIMENSION VERTICAL
LLH = LONG LEG HORIZONTAL
LLV = LONG LEG VERTICAL
LSL = LAMINATED STRAND LUMBER
LVL = LAMINATED VENEER LUMBER
MCJ = MASONRY CONTROL JOINT
MFR = MANUFACTURER
NS = NEAR SIDE
oc = ON CENTER
OPNG = OPENING
PE = PRE-ENGINEERED
PL = PLATE
PSL = PARALLEL STRAND LUMBER
PT = PRESSURE TREATED
P/T = POST TENSION
RD = ROOF DRAIN
REINF = REINFORCING
RTU = ROOF TOP UNIT
SIM = SIMILAR
SL = STEP LEDGE
SPA = SPACE OR SPACES
SRD = SECONDARY ROOF DRAIN
STIFF = STIFFENER
STL = STEEL
STW = STEP TOP OF WALL
T/ = TOP OF
UNO = UNLESS NOTED OTHERWISE
VB = VERTICAL BRACING
VERT = VERTICAL
VIF = VERIFY IN FIELD
w/ = WITH
WP = WORK POINT

LEGEND

= ELEVATION INDICATION.

Steven Schaefer Associates, Inc.
Consulting Structural Engineers
815 Grandview Avenue • Suite 250 • Columbus, OH 43215 • www.ssastructural.com
Phone: 614-428-4400 • Fax: 614-428-4500

BRIDGE POINTE RETAIL CENTER IMPROVEMENTS

6400 - 6550 Riverside Drive
Dublin, Ohio 43017

COMMISSION NUMBER: 1205

TRIAD ARCHITECTS
936 Eastwind Drive, Suite 202
Columbus, Ohio 43081
Phone: (614) 942-1050
Fax: (614) 942-1059
main@triadarchitects.com

DATE:
8/27/2012 - PERMIT SET

SEAL:
STATE OF OHIO
GENE F. SIRCA, JR.
70169
REGISTERED
PROFESSIONAL ENGINEER
9/24/12

COPYRIGHT © 2012
THIS DOCUMENT IS THE PRODUCT AND EXCLUSIVE PROPERTY OF STEVEN SCHAEFER ASSOCIATES, INC. NEITHER THE DOCUMENT NOR THE INFORMATION IT CONTAINS MAY BE COPIED OR USED FOR ANY OTHER THAN THE SPECIFIC PURPOSE FOR WHICH IT WAS PREPARED, WITHOUT THE WRITTEN CONSENT OF STEVEN SCHAEFER ASSOCIATES, INC.

SSA Project Number: 1236.01

PLANS

DRAWN BY: BJH
CHECKED BY: GFS

S2.0

C:\Users\bjh\Documents\BRIDGE POINTE IMPROVEMENTS_bjh.rvt
9/24/2012 12:33:07 PM

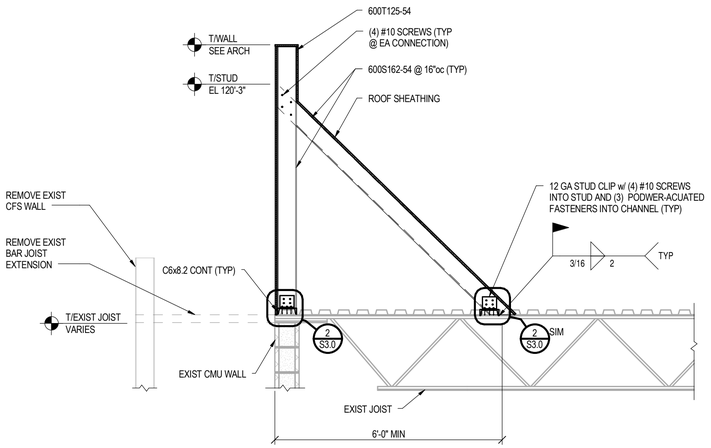

SECTION 1 (1/2" = 1'-0") — S3.0

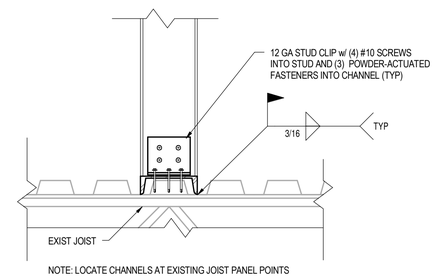

SECTION 2 (1 1/2" = 1'-0") — S3.0

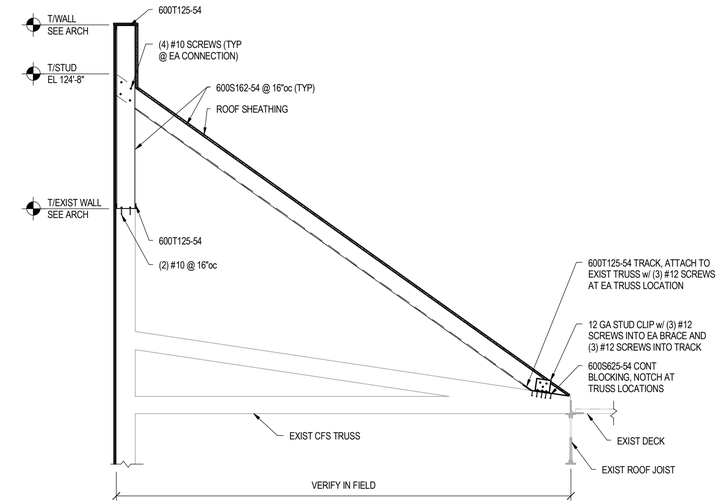

SECTION 3 (1/2" = 1'-0") — S3.0

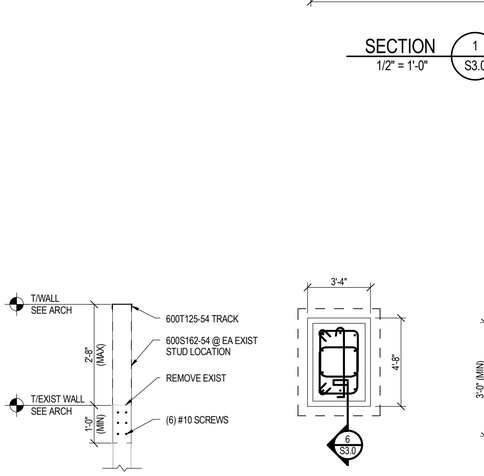

SECTION 4 (1/2" = 1'-0") — S3.0

SECTION 5 (1/4" = 1'-0") — S3.0

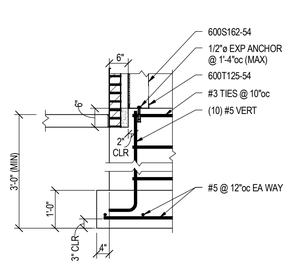

SECTION 6 (1/2" = 1'-0") — S3.0

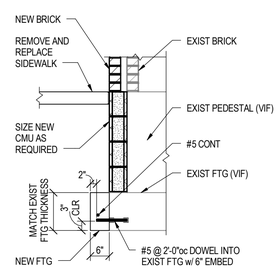

TYPICAL NEW BRICK OVER EXISTING BRICK CONDITION

1/2" = 1'-0" — S3.0

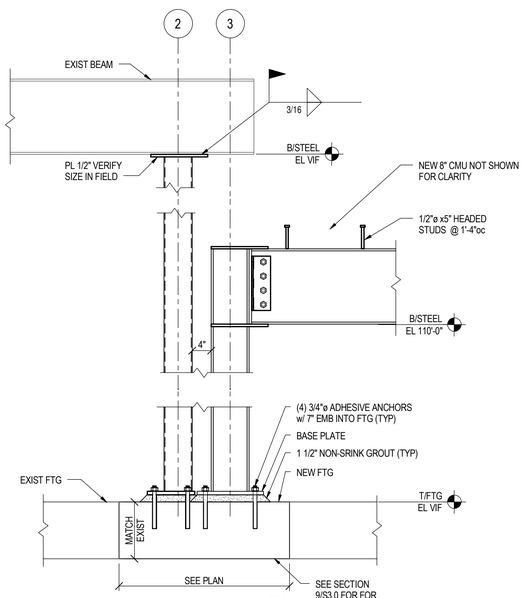

SECTION 8 (3/4" = 1'-0") — S3.0

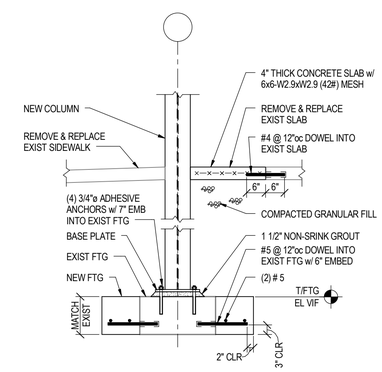

SECTION 9 (1/2" = 1'-0") — S3.0

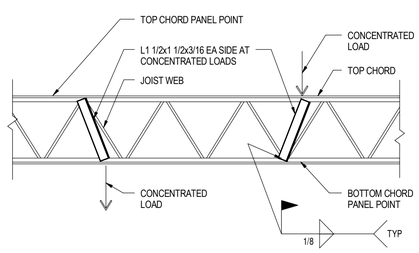

TYPICAL SUPPORT OF CONCENTRATED LOADS NOT AT JOIST PANEL POINTS

3/4" = 1'-0"

LINTEL SCHEDULE

MARK	SIZE @ CMU	REMARKS
L1	W8x24 w/ PL 1/4"x7"	B/STL EL = 110'-0"

NOTES:
1. PROVIDE 8" BEARING EACH END OF LINTEL, UNO.
2. CENTER LINTEL UNDER CMU, UNO IN PLAN OR SECTION.

BASE PLATE SCHEDULE

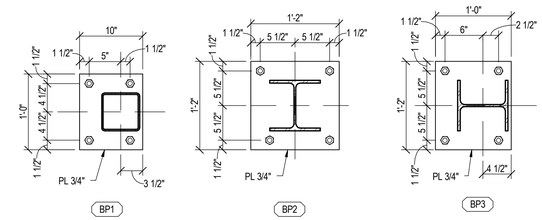

CFS MEMBER DESIGNATION

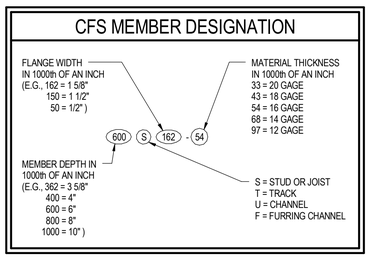

COPYRIGHT © 2012
THIS DOCUMENT IS THE PRODUCT AND EXCLUSIVE PROPERTY OF STEVEN SCHAEFER ASSOCIATES, INC. NEITHER THE DOCUMENT NOR THE INFORMATION IT CONTAINS MAY BE COPIED OR USED FOR ANY OTHER THAN THE SPECIFIC PURPOSE FOR WHICH IT WAS PREPARED, WITHOUT THE WRITTEN CONSENT OF STEVEN SCHAEFER ASSOCIATES, INC.

SSA Project Number: 1236.01

Steven Schaefer Associates, Inc.
Consulting Structural Engineers
815 Grandview Avenue • Suite 250 • Columbus, OH 43215 • www.ssastructural.com
Phone: 614-428-4400 • Fax: 614-428-4500

BRIDGE POINTE RETAIL CENTER IMPROVEMENTS

6400 - 6550 Riverside Drive
Dublin, Ohio 43017

COMMISSION NUMBER: 1205

TRIAD ARCHITECTS
936 Eastwind Drive, Suite 202
Columbus, Ohio 43081
Phone: (614) 942-1050
Fax: (614) 942-1059
main@triadarchitects.com

DATE: 8/27/2012 - PERMIT SET

SEAL: STATE OF OHIO — GENE F. SIRCA, JR. — 70169 — REGISTERED PROFESSIONAL ENGINEER — 8/24/12

SECTIONS

DRAWN BY: Designer
CHECKED BY: Author

S3.0

C:\Users\jb\Documents\BRIDGE POINTE IMPROVEMENTS_jb.rvt
9/24/2012 12:33:08 PM

STRUCTURAL NOTES

GOVERNING CODE

OHIO BUILDING CODE – 2011 (REFERENCES IBC 2009 & ASCE-7 2005).

DESIGN LOADS

1. ROOF LOAD:

A.	MINIMUM COMBINATION OF WIND LOAD, LIVE LOAD, RAIN LOAD, OR SNOW LOAD (Pf)	20	PSF*
B.	SINGLE-PLY ROOFING	3	PSF
C.	ROOF SHEATHING	3	PSF
D.	TRUSS FRAMING LOAD	3	PSF
E.	CEILING, INSULATION	3	PSF
F.	MISC. MECHANICAL	3	PSF
	TOTAL LOAD ON TRUSSES	35	PSF MIN.

(*GROUND SNOW Pg = 20 PSF MODIFIED BY APPLICABLE SLOPE COEFFICIENT C_s. SNOW LOAD IMPORTANCE FACTOR I = 1.0. SNOW EXPOSURE FACTOR C_e = 1.0. SNOW LOAD THERMAL FACTOR C_t = 1.0.)

2. WIND LOAD (PER ASCE 7):

A. BASIC WIND SPEED (BASED ON 3-SECOND GUST) = 90 MPH
B. OCCUPANCY CATEGORY = II
C. WIND IMPORTANCE FACTOR, I = 1.0
D. WIND EXPOSURE = C (ALL WIND DIRECTIONS)
E. INTERNAL PRESSURE COEFFICIENT, GCpi = +0.18, -0.18
F. DESIGN PRESSURES FOR EXTERIOR COMPONENT AND CLADDING ITEMS NOT DESIGNED BY THE ENGINEER OF RECORD: SPECIALTY ENGINEER SHALL DETERMINE WIND LOADS UNDER GOVERNING BUILDING CODE, AND BASED ON WIND LOAD PARAMETERS DEFINED ABOVE.

3. SEISMIC LOAD:

A.	SEISMIC IMPORTANCE FACTOR, I_E	= 1.0
B.	MAPPED SPECTRAL RESPONSE ACCELERATION AT SHORT PERIODS, S_S	= 0.154
C.	MAPPED SPECTRAL RESPONSE ACCELERATION AT 1 SEC. PERIOD, S_1	= 0.059
D.	OCCUPANCY CATEGORY	= II
E.	SPECTRAL RESPONSE COEFFICIENT S_{DS}	= 0.164
F.	SPECTRAL RESPONSE COEFFICIENT S_{D1}	= 0.094
G.	SITE CLASS	= D
H.	BASIC STRUCTURAL SYSTEM	= BEARING WALL SYSTEM
I.	SEISMIC-FORCE-RESISTING SYSTEM	= ORDINARY REINFORCED MASONRY SHEAR WALLS
J.	SEISMIC DESIGN CATEGORY	= B
K.	RESPONSE MODIFICATION FACTOR, R	= 2
L.	SEISMIC RESPONSE COEFFICIENT, C_S	= 0.082
M.	ANALYSIS PROCEDURE	= ELFP

CONSTRUCTION AND SAFETY

1. CONTRACTOR SHALL BRACE ENTIRE STRUCTURE AS REQUIRED TO MAINTAIN STABILITY UNTIL COMPLETE AND FUNCTIONING AS THE DESIGNED UNIT.

2. ENGINEER SHALL NOT BE RESPONSIBLE FOR THE MEANS, METHODS, TECHNIQUES, SEQUENCES OR PROCEDURES OF CONSTRUCTION SELECTED BY CONTRACTOR.

3. THE CONTRACTOR WILL BE SOLELY AND COMPLETELY RESPONSIBLE FOR CONDITIONS OF THE JOB SITE INCLUDING SAFETY OF ALL PERSONS AND PROPERTY DURING PERFORMANCE OF THE WORK. THIS REQUIREMENT WILL APPLY CONTINUOUSLY AND IS NOT LIMITED TO NORMAL WORKING HOURS. WHEN ON SITE, THE ENGINEER IS RESPONSIBLE FOR HIS/HER OWN SAFETY BUT HAS NO RESPONSIBILITY FOR THE SAFETY OF OTHER PERSONNEL OR SAFETY CONDITIONS AT THE SITE.

4. CONTRACTOR SHALL VERIFY ALL EXISTING CONDITIONS AND DIMENSIONS. SHOULD ANY DISCREPANCY BE FOUND, CONTRACTOR SHALL NOTIFY ARCHITECT/ENGINEER IMMEDIATELY OF THE CONDITION.

5. CONTRACTOR SHALL BRACE ENTIRE STRUCTURE AS REQUIRED DURING DEMOLITION AND CONSTRUCTION TO MAINTAIN STABILITY UNTIL THE STRUCTURE IS COMPLETE AND FUNCTIONING AS THE DESIGNED UNIT.

FOUNDATIONS

1. PER CLIENT'S REQUEST, THE FOUNDATION DESIGN AND GENERAL FOUNDATION NOTES ARE BASED ON THE ASSUMPTION OF FAVORABLE SOIL CONDITIONS. THE CONTRACTOR SHALL RETAIN A GEOTECHNICAL ENGINEER TO VERIFY DESIGN ASSUMPTIONS PRIOR TO FOUNDATION INSTALLATION. THE COST FOR THE GEOTECHNICAL ENGINEER SHALL BE LISTED AS A SEPARATE ITEM ON THE CONTRACTOR'S BID. THE CONTRACTOR SHALL SUBMIT COPIES OF THE GEOTECHNICAL ENGINEER'S REPORT TO STEVEN SCHAEFER ASSOCIATES. ALL FOOTINGS SHALL BEAR ON LEVEL (WITHIN 1 IN 12) UNDISTURBED SOIL OR APPROVED ENGINEERED FILL. FOUNDATIONS HAVE BEEN DESIGNED FOR A MAXIMUM SOIL BEARING PRESSURE OF 3000 PSF BELOW STRIP FOOTINGS AND 2000 PSF BELOW ISOLATED COLUMN FOOTINGS.

2. FOOTINGS MAY BE PLACED WITHOUT SIDE FORMS IF EXCAVATED WALLS STAND APPROXIMATELY VERTICAL.

3. CONTRACTOR SHALL CONTACT UTILITY COMPANIES FOR LOCATING UNDERGROUND SERVICES AND IS RESPONSIBLE FOR THEIR PROTECTION AND SUPPORT.

4. FILL AND BACK FILL:

A. ALL FILL MATERIALS SHALL BE APPROVED BY A GEOTECHNICAL CONSULTANT.

B. ENGINEERED FILL BENEATH FOOTINGS: MINIMUM COMPACTION 98% STANDARD PROCTOR DENSITY AT THE OPTIMUM MOISTURE CONTENT.

5.

CONCRETE

1. CONCRETE WORK IN COLD WEATHER SHALL CONFORM TO ALL REQUIREMENTS OF ACI 306.1-90 "STANDARD SPECIFICATION FOR COLD WEATHER CONCRETING" AND ACI 306R-88 "COLD WEATHER CONCRETING".

2. CONCRETE WORK IN HOT WEATHER SHALL CONFORM TO ALL REQUIREMENTS OF ACI 305R-99 "HOT WEATHER CONCRETING". THE AIR TEMPERATURE, RELATIVE HUMIDITY, CONCRETE TEMPERATURE, AND WIND VELOCITY SHALL BE ENTERED INTO NOMOGRAPH FIGURE 2.1.5 TO DETERMINE IF PRECAUTIONS AGAINST PLASTIC SHRINKAGE ARE REQUIRED.

3. CONCRETE MIX DESIGNS SHALL BE SUBMITTED FOR EACH TYPE OF CONCRETE TO THE STRUCTURAL ENGINEER FOR APPROVAL IN ACCORDANCE WITH ACI 301-05 SECTION 4.2.3.4 FIELD TEST DATA OR TRIAL MIXTURES. SUBMITTAL DATA MUST INCLUDE FIELD TEST DATA FROM AT LEAST 10 TESTS OR A THREE POINT CURVE GENERATED USING TRIAL MIXTURES.

4. SUBMIT SHOP DRAWINGS FOR REINFORCING STEEL.

5. MATERIALS: (f'c BASED ON 28 DAY UNLESS NOTED)

A. CONCRETE UNLESS NOTED: f'c = 4000 PSI., NORMAL WEIGHT AGGREGATE.

B. CONCRETE FOR EXTERIOR FLAT WORK, WALKS, ETC.: f'c = 4000 PSI, (4.5% TO 7.5% ENTRAINED AIR), MAXIMUM WATER/CEMENTITIOUS RATIO = 0.45. LIMIT POZZOLAN CONTENT PER ACI 301-05 TABLE 4.2.2.9.

C. REINFORCING STEEL:

1. DEFORMED BARS: ASTM A615, ASTM A706, OR ASTM A996 (A996 BARS FROM RAIL STEEL SHALL BE TYPE R), 60 KSI YIELD.

2. WELDED WIRE FABRIC: ASTM A1064, FLAT SHEETS ONLY.

D. FLY ASH: ASTM C618, TYPE F OR C. WHEN USED, FLY ASH-TO-TOTAL CEMENTITIOUS RATIO SHALL BE 15% MINIMUM. WHEN USED IN INTERIOR SLABS, FLY ASH-TO-TOTAL CEMENTITIOUS RATIO SHALL BE 25% MAXIMUM.

E. GROUND GRANULATED BLAST FURNACE SLAG: ASTM C989. TOTAL GROUND GRANULATED BLAST FURNACE SLAG -TO- TOTAL CEMENTITIOUS RATIO SHALL NOT EXCEED 50% MAXIMUM.

F. FLY ASH, NATURAL POZZOLANS, SILICA FUME, OR GROUND GRANULATED BLAST FURNACE SLAG: WHEN EXPOSED TO DEICING CHEMICALS, LIMIT THE MAXIMUM WEIGHT TO THE PERCENTAGES OF THE TOTAL WEIGHT OF CEMENTITIOUS MATERIALS GIVEN IN TABLE 4.2.2.9 OF ACI 301-05.

G. PLASTICIZING ADMIXTURE: ASTM C1017.

H. WATER REDUCING ADMIXTURE: ASTM C494.

I. CHLORIDE CONTENT OF CONCRETE: LIMIT TOTAL CHLORIDE ION CONTENT TO AMOUNT INDICATED IN TABLE 4.2.2.6 OF ACI 301-05. ADMIXTURES CONTAINING CHLORIDE ARE NOT PERMITTED IN REINFORCED CONCRETE OR CONCRETE CONTAINING METALS.

6. IF CONCRETE ARRIVES AT THE POINT OF DELIVERY WITH A SLUMP BELOW THAT WHICH WILL RESULT IN THE SPECIFIED SLUMP AT THE POINT OF PLACEMENT AND IS UNSUITABLE FOR PLACING AT THAT SLUMP, THE SLUMP MAY BE ADJUSTED ONCE ONLY TO THE REQUIRED VALUE BY ADDING WATER UP TO THE AMOUNT ALLOWED IN THE ACCEPTED MIXTURE PROPORTIONS. ADDITION OF WATER SHALL BE IN ACCORDANCE WITH ASTM C94. DO NOT EXCEED THE SPECIFIED WATER-CEMENTITIOUS MATERIAL RATIO OR SLUMP IN THE APPROVED MIX DESIGN. DO NOT ADD WATER TO CONCRETE DELIVERED IN EQUIPMENT NOT ACCEPTABLE FOR MIXING. AFTER PLASTICIZING OR WATER REDUCING ADMIXTURES ARE ADDED TO THE CONCRETE AT THE SITE TO ACHIEVE FLOWABLE CONCRETE, DO NOT ADD WATER TO THE CONCRETE. MEASURE SLUMP (AND AIR CONTENT OF AIR ENTRAINED CONCRETE), AFTER SLUMP ADJUSTMENT, TO VERIFY COMPLIANCE WITH SPECIFIED REQUIREMENTS.

7. SLUMP SHALL BE MEASURED PRIOR TO THE ADDITION OF ADMIXTURES AND AFTER THE ADDITION OF ADMIXTURES.

8. LAP SPLICE REINFORCING BARS AS FOLLOWS UNLESS NOTED OTHERWISE:

A. HORIZONTAL BARS WITH MORE THAN 12" OF CONCRETE BELOW - 62 BAR DIAMETERS

B. HORIZONTAL BARS WITH LESS THAN 12" OF CONCRETE BELOW, AND ALL OTHER BARS - 50 BAR DIAMETERS

9. REINFORCING BARS SHALL BE FREE OF DIRT AND FORM RELEASE AGENTS.

ADHESIVE ANCHORS

1. ANCHORAGE TO CONCRETE: HILTI "HIT RE 500-SD" EPOXY. INSTALL PER MANUFACTURER'S RECOMMENDATIONS. SUBSTITUTES MAY BE CONSIDERED; SUBMIT MANUFACTURER'S DATA PRIOR TO INSTALLATION.

A. HOLES MAY BE DIAMOND CORED OR DRILLED WITH CONVENTIONAL HAMMER DRILL. HOLES SHALL BE BRUSHED AND BLOWN FREE OF ALL DELETERIOUS MATERIAL IN ACCORDANCE WITH MANUFACTURER'S RECOMMENDATIONS BEFORE INSTALLATION OF ADHESIVE.

2. CONTRACTOR SHALL VERIFY THAT THE SHELF LIFE OF THE ADHESIVE HAS NOT BEEN EXCEEDED ON THE DATE OF INSTALLATION.

MASONRY

1. MASONRY CONSTRUCTION AND MATERIALS SHALL CONFORM TO ALL REQUIREMENTS OF "SPECIFICATIONS FOR MASONRY STRUCTURES" (ACI 530.1-08/ASCE 6-08/TMS 602-08) EXCEPT AS MODIFIED BY THE REQUIREMENTS OF THESE CONTRACT DOCUMENTS.

2. COMPRESSIVE STRENGTH SHALL BE DETERMINED FOR EACH TYPE OF MASONRY BY THE UNIT STRENGTH METHOD.

A. CONCRETE MASONRY: f'_m = 1500 PSI AT 28 DAYS.

3. MATERIALS

A. CONCRETE MASONRY UNITS: ASTM C90 TYPE I.

1. BELOW GRADE: NORMAL WEIGHT AGGREGATE PER ASTM C33.
2. ABOVE GRADE: LIGHTWEIGHT AGGREGATE PER ASTM C331 OR NORMAL WEIGHT.

B. FACING BRICK: ASTM C216 GRADE SW. COLOR AND SIZE AS NOTED ON THE ARCHITECTURAL DRAWINGS.

C. MORTAR: ASTM C270

1. MORTAR TYPES

A. ALL MASONRY UNLESS NOTED OTHERWISE: TYPE S
B. NON-LOAD BEARING INTERIOR PARTITION WALLS: TYPE N
C. ABOVE GRADE VENEER: TYPE N

2. PORTLAND CEMENT-LIME MORTAR:

A. PORTLAND CEMENT: TYPE I.
B. HYDRATED LIME: TYPE S.

3. MASONRY CEMENT MORTAR IS PERMITTED.

D. GROUT: ASTM C476. SLUMP 8" TO 11". MINIMUM COMPRESSIVE STRENGTH = 2000 PSI AT 28 DAYS.

E. REINFORCING STEEL: ASTM A615, ASTM A706, OR ASTM A996, 60 KSI YIELD.

F. BRICK VENEER ANCHORS: HOHMANN & BARNARD HB-200 OR WIRE-BOND RJ-711 WITH 3/16" DIAMETER PINTLE. HOT-DIPPED GALVANIZED PER ASTM A153 CLASS B. VERTICAL DISTANCE BETWEEN HORIZONTAL PINTLE WIRE AND CLIP PLATE SHALL NOT EXCEED 1 1/4 INCH. (FLAT CORRUGATED TIES ARE NOT PERMITTED.) SCREWS SHALL BE MINIMUM #10 SIZE AND SHALL BE CADMIUM-PLATED OR HOT-DIPPED GALVANIZED. (STAINLESS STEEL AND COPPER-COATED SCREWS ARE NOT PERMITTED.) PROVIDE BRICK VENEER ANCHORS WITH MAXIMUM HORIZONTAL SPACING OF 24" AND MAXIMUM VERTICAL SPACING OF 16". BRICK VENEER ANCHORS SHALL BE EMBEDDED 2" MINIMUM INTO BRICK. VENEER ANCHORS AT EXISTING BRICK SHALL BE ATTACHED TO EXISTING BRICK WITH 3/16" DIAMETER CONCRETE SCREWS WITH 1" (MIN) EMBEDMENT.

G. HORIZONTAL JOINT REINFORCING FOR CONCRETE MASONRY VENEER: ASTM A951 9 GAGE WIRE HOT DIPPED GALVANIZED PER ASTM A153 CLASS B. PLACE HORIZONTAL JOINT REINFORCING AT 16" CENTERS VERTICALLY FOR VENEER. ALTERNATE BED JOINTS FOR HORIZONTAL JOINT REINFORCING AND VENEER ANCHORS. LAP HORIZONTAL JOINT REINFORCING 6" MINIMUM. HORIZONTAL JOINT REINFORCING SHALL BE DISCONTINUOUS ACROSS MOVEMENT JOINTS.

4. MORTAR PROPORTIONS MUST BE ACCURATELY MEASURED PRIOR TO MIXING. ADD CEMENT TO MIX IN FULL BAG QUANTITIES. MEASURE SAND IN BOX WITH VOLUME OF ONE CUBIC FOOT AS OFTEN AS NECESSARY TO MAINTAIN CONSISTENT PROPORTIONS AND AT LEAST ONCE DAILY AND EVERY 4 HOURS OF MIXING.

5. RUNNING BOND PATTERN SHALL BE USED FOR ALL MASONRY WORK UNLESS OTHERWISE NOTED.

STRUCTURAL STEEL

1. ALL DETAILING, FABRICATION, AND ERECTION SHALL CONFORM TO AISC SPECIFICATIONS FOR "DESIGN, FABRICATION, AND ERECTION OF STRUCTURAL STEEL FOR BUILDINGS", AND THE AISC "CODE OF STANDARD PRACTICE FOR STEEL BUILDINGS AND BRIDGES", LATEST EDITION.

2. FABRICATOR SHALL DESIGN CONNECTIONS AND, WHEN REQUESTED, SUBMIT CALCULATIONS TO AID THE ENGINEER IN REVIEW. UNLESS SPECIFIC END MOMENTS AND REACTIONS ARE INDICATED ON DRAWINGS, DESIGN AND FABRICATE CONNECTIONS TO RESIST SHEAR BASED ON THE MAXIMUM UNIFORM LOAD CAPACITY OF THE MEMBER FOR THE SPAN INCREASED BY 15%, BUT NO MORE THAN THE SHEAR CAPACITY OF THE MEMBER.

3. IF SHOP WELDS OR COLUMN REACTIONS FOR COLUMN-TO-BASE PLATE CONNECTIONS ARE NOT INDICATED ON THE DRAWINGS, THE CONNECTION SHALL BE DESIGNED BY THE FABRICATOR FOR ERECTION FORCES REQUIRED BY OSHA.

4. FIELD CONNECTIONS SHALL BE BOLTED EXCEPT WHERE WELDED CONNECTIONS ARE INDICATED ON THE STRUCTURAL DRAWINGS.

5. WELDING SHALL BE IN ACCORDANCE WITH THE AMERICAN WELDING SOCIETY (AWS D1.1:2010)

6. MATERIALS:

A. W-SHAPES UNLESS NOTED: ASTM A992, Fy = 50 KSI.

B. PLATES AND ROLLED SHAPES OTHER THAN W-SHAPES, UNLESS NOTED: ASTM A36.

C. TUBULAR SHAPES (HSS SQUARE AND RECTANGULAR): ASTM A500, GRADE B.

D. BOLTS: ASTM A325-N, 3/4" DIAMETER UNLESS NOTED.

E. ANCHOR BOLTS: ASTM A36 OR ASTM F1554, GRADE 36, CONFIGURATION AS SHOWN ON THE DRAWINGS, WITH WASHER PER AISC STEEL CONSTRUCTION MANUAL THIRTEENTH EDITION TABLE 14-2 UNLESS NOTED OTHERWISE.

F. FIELD WELDS: AWS E70XX, LOW HYDROGEN ELECTRODES.

G. NON-SHRINK NON-METALLIC GROUT: CRD-C-621 AND ASTM C1107 FOR INTERIOR AND EXTERIOR APPLICATIONS, FLUID TYPE.

H. HEADED STUDS FOR COMPOSITE BEAMS AND TILT-UP PANEL EMBEDS: ASTM A108 AND AWS D1.1, CHAPTER 7, TYPE B.

7. PAINT AND PROTECTION:

A. STRUCTURAL STEEL UNLESS NOTED: PREPARE STEEL SURFACES PER SSPC-SP3 "POWER TOOL CLEANING" AND PAINT WITH FABRICATOR'S STANDARD PRIME COAT, SUCH AS TNEMEC 10-1009. TOUCH UP AFTER ERECTION.

B. LINTELS SUPPORTING EXTERIOR MASONRY WYTHES AND MEMBERS EXPOSED TO WEATHER IN FINISHED STRUCTURES:

1. BLAST STEEL CLEAN PER SSPC-SP6 "COMMERCIAL BLAST CLEANING", PAINT WITH ZINC RICH PRIMER PORTER PORTERZINC 3000 OR TNEMEC 90-97 TNEMEC-ZINC DRY FILM THICKNESS 2.5 TO 3.5 MILS, AND FINISH PAINT 2 COATS ALIPHATIC POLYURETHANE PORTER PORTERTHANE 9000 SERIES. SUBSTITUTE MAY BE CONSIDERED; SUBMIT MANUFACTURER'S DATA PRIOR TO PAINTING.

<OR>

2. HOT DIP GALVANIZE PER ASTM A123 AFTER FABRICATION. COATING WEIGHT PER PARAGRAPH 5.1 OF ASTM A123 AND A153. FABRICATE ASSEMBLIES PER ASTM A143, A384, AND A385. AFTER ERECTION, REPAIR DAMAGED AREAS AND WELDS MADE AFTER GALVANIZING IN ACCORDANCE WITH ASTM A780 WITH ORGANIC ZINC RICH PAINT COMPLYING WITH DOD-P-21035 OR MIL-P-26915, MULTIPLE COATS TO DRY FILM THICKNESS OF 4 MILS.

8. CONTRACTOR SHALL SUBMIT ERECTION AND SHOP DRAWINGS FOR REVIEW BY ENGINEER. FABRICATION SHALL NOT BEGIN RIOR TO SHOP DRAWING APPROVAL BY ENGINEER.

9. INSTALLATION OF HEADED COMPOSITE STUDS SHALL CONFORM TO THE REQUIREMENTS OF AWS D1.1, SECTIONS 7.4 AND 7.5. HEADED COMPOSITE STUDS SHALL BE TESTED IN ACCORDANCE WITH AWS D1.1, SECTIONS 7.6, 7.7, AND 7.8 BY A QUALIFIED TESTING AGENCY. COPIES OF THE TEST REPORTS SHALL BE SUBMITTED TO THE ENGINEER.

COLD-FORMED STEEL FRAMING

1. WORK SHALL MEET THE REQUIREMENTS OF THE FOLLOWING STANDARDS:

A. AMERICAN IRON AND STEEL INSTITUTE (A.I.S.I.) "STANDARD FOR COLD-FORMED STEEL FRAMING – GENERAL PROVISIONS", LATEST EDITION.

B. AMERICAN WELDING SOCIETY (A.W.S.).D.1.3, 2008 "STRUCTURAL WELDING CODE-SHEET STEEL."

2. MATERIALS:

A. STRUCTURAL FRAMING MEMBERS 54 MILS (16 GAGE) & HEAVIER: ASTM A1003 & C955, Fy MINIMUM = 50 KSI, G60 GALVANIZED COATING.

B. STRUCTURAL FRAMING MEMBERS 43 MILS (18 GAGE) & LIGHTER: ASTM A1003 & C955, F_y MINIMUM = 33 KSI, G60 GALVANIZED COATING.

C. COLD-FORMED STEEL STUDS FOR BRICK VENEER BACKUP: 43 MILS (18 GAGE) MINIMUM THICKNESS. G90 GALVANIZED COATING.

D. ALL TRACK & BRIDGING: F_y = 33 KSI MINIMUM, ASTM A1003 & C955, G60 GALVANIZED COATING.

E. VERTICAL STRAP BRACING: F_y = 50 KSI MINIMUM. SIZE & GAGE AS NOTED ON PLAN, ASTM A1003 & C955, G60 GALVANIZED COATING.

F. SELF-DRILLING TAPPING SCREW FASTENERS:

1. IN COMPLIANCE WITH SAE J78, SIZE & SPACING AS NOTED ON DRAWINGS.
2. UNLESS NOTED OTHERWISE, SCREWS IN STEEL TO STEEL CONNECTIONS SHALL HAVE A MINIMUM EDGE DISTANCE & SPACING OF 3 TIMES THE NOMINAL SCREW DIAMETER.
3. SCREWS ALONG THE EDGES OF WALL SHEATHING SHALL BE PLACED A MINIMUM OF 3/8" FROM THE SHEATHING EDGES.
4. SCREWS SHALL BE OF SUFFICIENT LENGTH TO EXTEND THROUGH THE STEEL CONNECTION A MINIMUM OF 3 EXPOSED THREADS, AND SHALL PENETRATE INDIVIDUAL COMPONENTS OF CONNECTIONS WITHOUT CAUSING PERMANENT SEPARATION BETWEEN COMPONENTS.

G. WELDING ELECTRODES: E60XX, WELD SIZE AS NOTED ON STRUCTURAL DRAWINGS.

H. STUD CLIPS: "STIFFCLIP LB" SERIES, 97 MILS (12 GAGE) MIN., 50 KSI, MANUFACTURED BY THE STEEL NETWORK, INC.. INSTALL PER MANUFACTURER'S RECOMMENDATIONS. SUBSTITUTES MAY BE CONSIDERED, SUBMIT MANUFACTURER'S DATA PRIOR TO INSTALLATION.

3. CONNECT ALL STUD CLIPS AND SLIDE CLIPS TO STRUCTURAL STEEL FRAMING WITH (3) POWDER DRIVEN FASTENERS (TYPE X-U NAIL, 0.157" DIAMETER, QUALIFIED PER ICC-ES ESR-2269) OR (3) #12-24, TEK 5 SELF DRILLING FASTENERS. CONNECTION TO COLD-FORMED STEEL MEMBERS PER MANUFACTURER'S RECOMMENDATIONS.

4. CUT ALL FRAMING COMPONENTS SO THEY FIT SQUARELY TOGETHER. STUDS MUST BEAR TIGHT AGAINST TRACK WEB. MEMBERS SHALL BE HELD POSITIVELY IN PLACE UNTIL PROPERLY FASTENED. BRACE WALL COMPONENTS AS REQUIRED DURING ERECTION TO PREVENT RACKING AND DISTORTION.

5. ALL FRAMING SHALL BE THE COMPONENTS SPECIFIED ON THE STRUCTURAL DRAWINGS AS MANUFACTURED IN ACCORDANCE WITH THE INDICATED STEEL STUD MANUFACTURERS ASSOCIATION (SSMA) SIZE, STYLE, AND MATERIAL THICKNESS. UNLESS NOTED OTHERWISE ON THE STRUCTURAL DRAWINGS, ALL FRAMING MEMBERS SHALL BE S-SECTIONS WITH 1-5/8" FLANGE WIDTH, AND ALL TRACK SHALL HAVE 1-1/4" FLANGE WIDTH.

6. FASTENING OF COMPONENTS SHALL BE WITH SELF-DRILLING TAPPING SCREWS OR WELDING. ALL WELDED CONNECTIONS SHALL BE MADE BY WELDERS CERTIFIED FOR WELDING MEMBERS OF GAGE BEING USED PER AWS D.1.3-08.

7. BRIDGING REQUIREMENTS FOR BEARING AND EXTERIOR WALLS: MINIMUM BRIDGING 1 1/2" "C" CHANNEL WITH 1-1/2" X 2" X 54 MILS (16 GAGE) CLIP ANGLES AT EACH STUD.

A. WALLS UP TO 10 FEET HIGH:

1. BEARING WALLS: TWO ROWS AT THIRD POINTS.
2. NON-BEARING EXTERIOR WALLS: ONE ROW AT MID-HEIGHT.

B. WALLS OVER 10 FEET HIGH:

1. BEARING WALLS: ROWS SPACED AT 4'-0" MAXIMUM.
2. NON-BEARING EXTERIOR WALLS: ROWS SPACED AT 5'-0" ON CENTER MAXIMUM.

WOOD

1. MATERIALS:

A. SHEATHING & SUBFLOORING:

1. MATERIALS:

a. ROOF SHEATHING: 19/32" APA SPAN RATING 40/20 ROOF SHEATHING EXPOSURE 1. INSTALL PANEL CLIP THAT CREATES AN 1/8" SPACE BETWEEN PANELS AT MIDSPAN OF EACH TRUSS/RAFTER SPACE ALONG UNSUPPORTED SHEATHING EDGES.

<OR>

ROOF SHEATHING (FIRE RESISTANT TREATED PLYWOOD): 19/32" DRICON SPAN RATING 32/16 MANUFACTURED BY ARCH. INSTALL PANEL CLIP THAT CREATES AN 1/8" SPACE BETWEEN PANELS AT MIDSPAN OF EACH TRUSS/RAFTER SPACE ALONG UNSUPPORTED SHEATHING EDGES.

b. WALL SHEATHING: 7/16" APA SPAN RATING 24/16 WALL SHEATHING EXPOSURE 1.

2. CONNECTIONS:

a. ALL SHEATHING SHALL BE SCREWED TO COLD FORMED STEEL FRAMING WITH SELF-DRILLING SCREWS AT 6" ON CENTER AT PANEL EDGES, AND 12" ON CENTER AT INTERMEDIATE ROOF AND FLOOR SUPPORTS, UNLESS NOTED OTHERWISE. USE #10 SCREW FOR STEEL THICKNESS UP TO 0.135" AND #12 SCREW FOR STEEL THICKNESS UP TO 0.25".

Steven Schaefer Associates, Inc.
Consulting Structural Engineers
815 Grandview Avenue • Suite 250 • Columbus, OH 43215 • www.ssastructural.com
Phone: 614-428-4400 • Fax: 614-428-4500

BRIDGE POINTE RETAIL CENTER IMPROVEMENTS

6400 - 6550 Riverside Drive
Dublin, Ohio 43017

COMMISSION NUMBER: 1205

TRIAD ARCHITECTS
936 Eastwind Drive, Suite 202
Columbus, Ohio 43081
Phone: (614) 942-1050
Fax: (614) 942-1059
main@triadarchitects.com

DATE:
8/27/2012 - PERMIT SET

SEAL:
STATE OF OHIO
GENE F. SIRCA, JR.
70169
REGISTERED PROFESSIONAL ENGINEER
8/24/12

COPYRIGHT © 2012
THIS DOCUMENT IS THE PRODUCT AND EXCLUSIVE PROPERTY OF STEVEN SCHAEFER ASSOCIATES, INC. NEITHER THE DOCUMENT NOR THE INFORMATION IT CONTAINS MAY BE COPIED OR USED FOR ANY OTHER THAN THE SPECIFIC PURPOSE FOR WHICH IT WAS PREPARED, WITHOUT THE WRITTEN CONSENT OF STEVEN SCHAEFER ASSOCIATES, INC.

SSA Project Number: 1236.01

GENERAL NOTES

DRAWN BY: BJH
CHECKED BY: GFS

S4.0

C:\Users\bjh\Documents\BRIDGE POINTE IMPROVEMENTS_bjh.rvt
8/24/2012 12:33:08 PM

BRK-1
(BRICK VENEER & EIFS BRICK)

Glen-Gery Brick - Aberdeen

EIFS-1
(FIELD)

BASF Senergy
“Parchment”
Fine Finish

EIFS-2
(ACCENT)

BASF Senergy
“Concord”
Fine Finish

PT-1
(LOUVERS,
SIGNAGE BORDER)

Benjamin Moore
2131-10
“Black Satin”

PT-2
(EXISTING ITEMS,
EXISTING MASONRY)

Benjamin Moore
HC-95
“Sag Harbor Gray”

PT-3
(SOFFITS)

(Benjamin Moore
HC-27
“Monterey White”)

STN-1
(STONE BASE & CAP)

Shouldice Designer Stone
“Desert Bluff:
Fine Finish

PROPOSED COLOR SCHEME

BRIDGE POINTE RETAIL CENTER IMPROVEMENTS

9/11/2012

TRIAD
ARCHITECTS

5000 Series

ELCAST LIGHTING

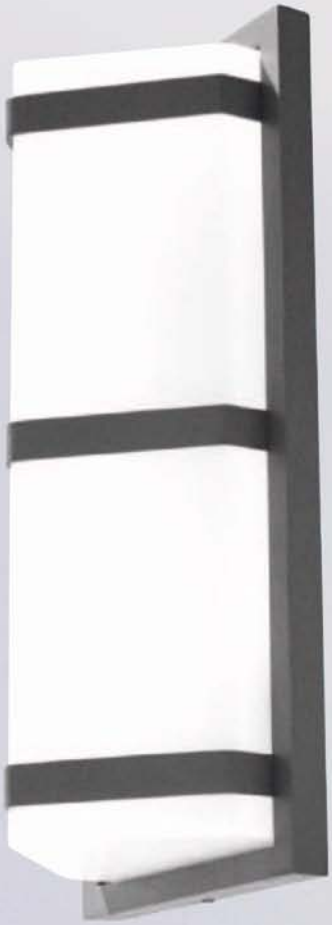

Catalog Number	
Project/Location	Type
Approved By	

5000 SERIES WALL SCONCE

LED, CFL ARCHITECTURAL WALL SCONCE

HOUSING
Heavy gauge formed aluminum. Decorative frames shall be made from extruded aluminum. Stainless steel hardware. Custom designed frames available.

GASKET
Closed cell silicone foam gasket seals out moisture, dust, and insects for weather-tight operation.

LENS
1/8" thick, triangular shaped, opal acrylic. Provides shadow-free illumination.

BALLASTS
CF: electronic, thermally protected high power factor 120/277
LED: solid state electronic driver

SOCKET
CF: four pin plug-in type

MOUNTING
Surface wall mount.

FINISH/COLOR
Polyester powder coat finish over zinc based primer. Available in matte black (MB), matte bronze (BZ), matte white (MW), silver gray (SG), or custom color (CC).

100% Made In USA

OPTIONS

F1	single fuse
D	dimming
ETI	emergency ballast in separate back box
ETR	emergency ballast remote only (CFL only
LED-ETR	emergency ballast remote (LED only)

Suitable for wet location.
Conforms to UL Standard 1598.

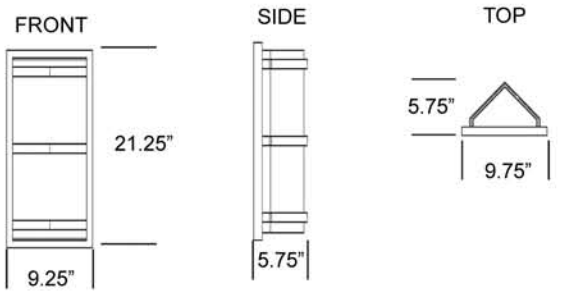

Series	Lamp	Wattage/MAX
5000	2/PLC	18W
	2/PLC	26W
	2/PLC	42W
	BX	36W
	BX	39W
	LED	consult factory

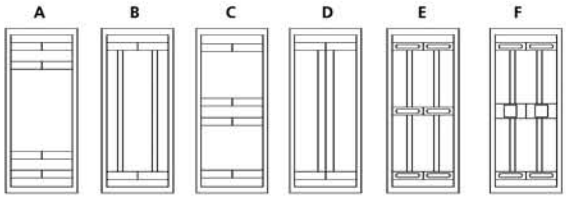

Ordering Example

5000 - C - 36BX - 120 - SG - ETR

Specifications are subject to change without notice. Consult factory for verification.

ELCASTLIGHTING
815 S KAY AVE ADDISON, IL 60101 USA
630.543.5390 • FAX: 630.543.5392
elcastltg@elcastltg.com • www.elcastltg.com