$1025

Administrative Review Team | June 2012

Case # 12-071MPR

City of Dublin

# APPLICATION FOR **DEVELOPMENT**

## PLEASE CHECK THE TYPE OF REVIEW

- ☑ West Innovation Districts (Zoning Code Sections 153.037 - 153.043)
- ☑ Bridge Street Corridor Districts (Zoning Code Sections 153.057- 153.066)
- ☑ Wireless Communication Facility (Chapter 99)

## PLEASE CHECK THE APPLICATION TYPE

- ☐ Basic Plan Review
- ☐ Development Plan Review
- ☒ Minor Project
- ☐ Site Plan Review
- ☐ Waiver Review
- ☐ Open Space Fee-in-Lieu
- ☐ City Council Appeal
- ☐ Master Sign Plan
- ☐ Parking Plan
- ☐ Administrative Departure

**Wireless Applications**

- ☐ New Tower
- ☐ Alternative Structure
- ☐ Co-Location
- ☐ Temporary

The following applications require review and decision by the **Planning and Zoning Commission, Board of Zoning Appeals,** or **Architectural Review Board,** but may be submitted concurrently with another application.

Check any that apply:

- ☐ Conditional Use
- ☐ Rezoning
- ☐ Administrative Appeal
- ☐ Project involving modifications to property within the Architectural Review District
- ☐ Other: _____

## SUBMISSION REQUIREMENTS

- ☐ **Fee** (refer to the approved fees list)
- ☐ **Electronic Copies** of all application materials (PDF, JPEG, Word, etc. as appropriate)
- ☐ **Submission Requirements** for each type of application (refer to checklists)
- ☐ **Legal Description and/or Property Survey** for the subject property

## I. PROPERTY INFORMATION:

Provide information to identify properties and the proposed development. Attach additional sheets if necessary.

| Property Address(es): 6801 Village Parkway Dublin, OH 43017 | |
|---|---|
| Tax ID/Parcel Number(s): 273-009088 | Parcel Size(s) in Acres: 9.92 acres |
| Existing Land Use/Development: Vehicle Sales and Service | Zoning District: BSC Sawmill Center Neighborhood District |

☐ Check this box if any **Administrative Departures** are requested and attach an Administrative Departure request form.

☐ Check this box if any **Waivers** are requested as part of the application for development and attach a Waiver Request form.

## II. PROPERTY OWNER INFORMATION:

Indicate the person(s) or organization(s) who own the property proposed for development. Attach additional pages if there are multiple property owners.

| Name (Individual or Organization): GEO Byers Sons Holding, LLC | |
|---|---|
| Mailing Address: 427 South Hamilton Road Columbus, Ohio 43213 | |
| Daytime Telephone: (614) 989-9215 | Fax: (614) 461-6030 |
| Email or Alternate Contact Information: jcurry@byersauto.com | |

## FOR OFFICE USE ONLY: DIRECTOR'S ACCEPTANCE

| Date of Acceptance: 9/28/2012 | Next Decision Due Date: 10/12/2012 |
|---|---|
| Final Date of Decision: | Determination: |
| Director's (or Designee's) Signature: | |

RECEIVED

SEP 28 2012

12-071MPR

CITY OF DUBLIN PLANNING

FILE COPY

**III. APPLICANT(S):** Indicate person(s) submitting the application if different than the property owner(s).

| | |
|---|---|
| Name: (Individual or Organization) John P. Curry | |
| Mailing Address: 427 South Hamilton Road Columbus, OH 43213 | |
| Daytime Telephone: (614) 989-9215 | Fax: (614) 461-6030 |
| Email or Alternate Contact Information: jcurry@byersauto.com | |

**IV. AUTHORIZED REPRESENTATIVE(S):** Indicate the person(s) authorized to represent the property owner and/or applicants.

| | |
|---|---|
| Name: (Individual or Organization) John P. Curry | |
| Mailing Address: 427 South Hamilton Road Columbus, Ohio 43213 | |
| Daytime Telephone: | Fax: |
| Email or Alternate Contact Information: | |

**V. AUTHORIZATION FOR OWNER'S APPLICANT(S)/REPRESENTATIVE(S):** Complete if applicable.

I, Blaine M. Byers, the **owner**, hereby authorize John P. Curry to act as a **representative(s)** in all matters pertaining to the processing and approval of this application, including modifying the application. I agree to be bound by all representations and agreements made by the designated representative.

| | |
|---|---|
| Signature of Current Property Owner: [signature] | Date: SEP 25 2012 |

☐ Check this box if the original Authorization for Owner's Applican(s)/Representative(s) is attached as a separate document.

**VI. AUTHORIZATION TO VISIT THE PROPERTY:** Site visits to the property by City representatives are essential to process this application. The Owner/Applicant, as noted below, hereby authorizes City representatives to enter, photograph and post a notice on the property described in this application. This is optional, but recommended.

I, Blaine M.Byers, the **owner** or **authorized representative**, hereby authorize City representatives to enter, photograph and/or post a notice on the property described in this application.

| | |
|---|---|
| Signature of Owner or Authorized Representative: [signature] | Date: SEP 25 2012 |

**VII. APPLICANT'S AFFIDAVIT:** This section must be completed and notarized.

I, Blaine M. Byers, the **owner** or **authorized representative**, have read and understand the contents of this application. The information contained in this application, attached exhibits and other information submitted, is complete and in all respects true and correct, to the best of my knowledge and belief.

| | |
|---|---|
| Signature of Current Property Owner or Authorized Representative: [signature] | Date: SEP 25 2012 |

☐ Check this box if the Applicant's Affidavit and Acknowledgement is attached as a separate document.

Sworn and sworn to before me this SEP 25 2012 day of _____, 20____

Jeanne L. Winegardner
Notary Public, State of Ohio
My Commission Expires
08-15-2016

(Notary Public Seal)

County of DUBLIN

NOTARIAL SEAL STATE OF OHIO

[signature]

## NOTES:

A. Quantity: One (1)-Tank Required.
B. Material: H.R. Carbon Steel.
C. Design & Operating Pressure: Atmospheric.
D. Design & Operating Temperature: Ambient.
E. Tank to be Built & Labeled per U.L. Spec. #142.
F. Tank to be Air Tested with Water & Soap Suds Solution.
G. Tank to Bear Manufacturers & U.L. Labels Only.
H. Interior: Remove Weld Slag & Vacuum, (Ship Clean & Dry).
I. Exterior: Sandblast & Apply One Shop Coat Red Oxide Primer.
J. All Fittings to be Protected for Shipment.
K. Customer has the Responsibility to Verify all Dimensions.
L. For all Tank & Fitting Details, See Dwg. #TK-H-AG-DW-FS-300-1000-B2.
M. All Saddle Parts to be Seal Welded.

## NOZZLE SCHEDULE

| QTY. | ITEM | SIZE | RATING | TYPE | MATL. | PROJ. IN | PROJ. OUT | NOZZLE DESCRIPTION | | | WELD LEG DIM. (NOZ. TO SHELL) | | | REMARKS | NOTES |
|---|---|---|---|---|---|---|---|---|---|---|---|---|---|---|---|
| | | | | | | | | WEIGHT | WALL SZ. | SIZE O.D. | INWARD | OUTWARD | TYPE WLD. | | |
| 1 | A | 6" | PIPE | NIPPLE | C.S. | 0" | 4" Lg. | STD. | .280" | 6.625" | | | FILLET / GRV. | SEE DETAIL "A" | TANK EMERG. VENT |
| 2 | B | 4" | STD. NPT. | WLD. FLG. | C.S. | 0" | AS SHWN. | | | | | | FILLET | SEE WELD FLG. DTL. | PRODUCT |
| 3 | C | 2" | STD. NPT. | WLD. FLG. | C.S. | 0" | AS SHWN. | | | | | | FILLET | SEE WELD FLG. DTL. | PRODUCT |
| 1 | D | 6" | PIPE | NIPPLE | C.S. | 0" | 4" Lg. | STD. | .280" | 6.625" | | | FILLET / GRV. | SEE DETAIL "D" | INTERSTICE EMERG. VENT |
| 1 | E | 2" | STD. NPT. | HF. CPLG. | C.S. | AS SHWN. | AS SHWN. | STD. | .154" | 2.375" | | | FILLET / GRV. | SEE DETAIL "E" | MONITORING PORT |

NOTE: For all Fitting Details, See Dwg. #TK-H-AG-DW-FS-300-1000-B2

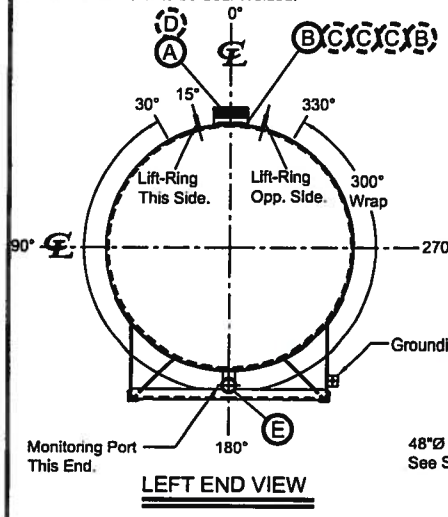


LEFT END VIEW

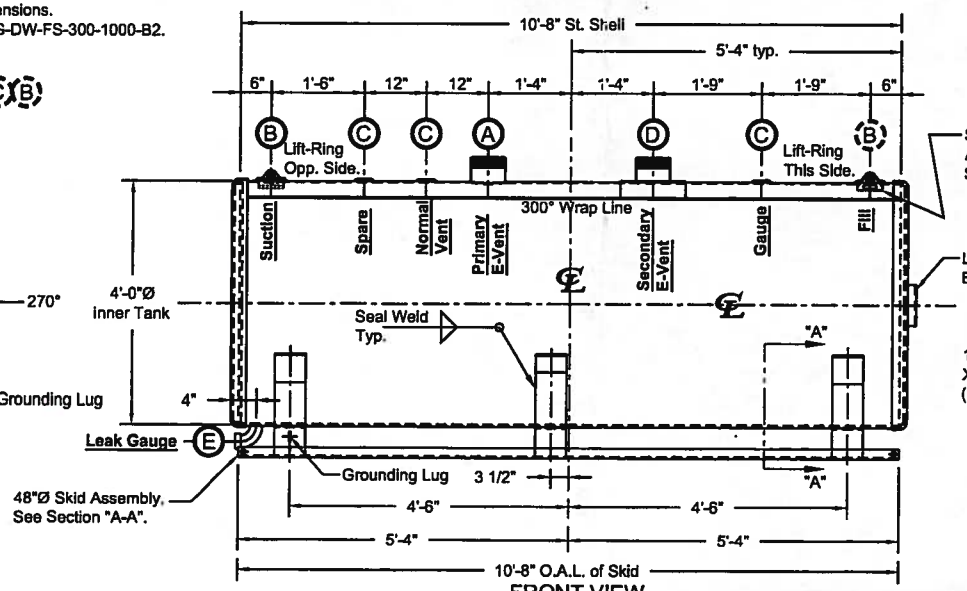


FRONT VIEW

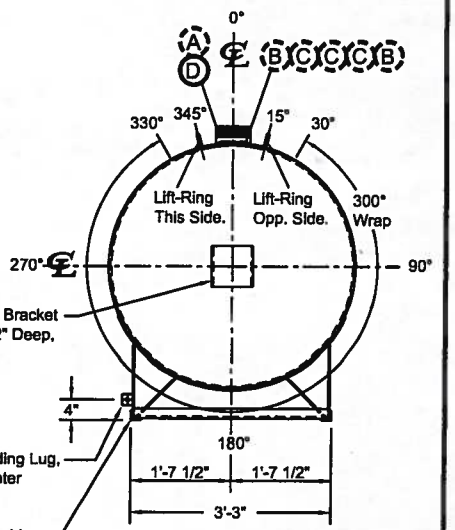


RIGHT END VIEW

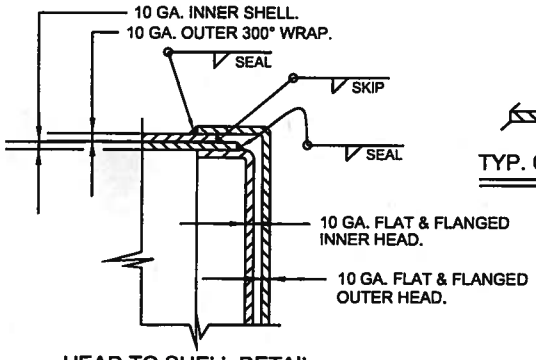


HEAD TO SHELL DETAIL

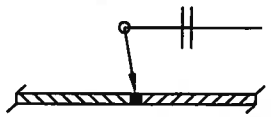

TYP. GIRTH & LONG. SEAMS

**FOR APPROVAL**

APPROVAL FOR CONSTRUCTION
PLEASE SIGN AND RETURN:

☐ APPROVED AS DRAWN.

☐ APPROVED WITH NOTED CHANGES, CONSTRUCTION WILL BE SCHEDULED WHEN SIGNED DRAWING IS RECEIVED.

SIGNATURE:_____

DATE:_____

| NO. | DESCRIPTION | DATE | NAME |
|---|---|---|---|

REVISIONS

**PROPRIETARY AND CONFIDENTIAL**

THE INFORMATION CONTAINED IN THIS DRAWING IS THE SOLE PROPERTY OF HAMILTON TANKS, LLC. ANY REPRODUCTION IN PART OR AS A WHOLE WITHOUT THE WRITTEN PERMISSION OF HAMILTON TANKS, LLC IS PROHIBITED.

JOB:

Hamilton Tanks
1-800-627-8265

Weight: 1,740# Net.

VESSEL DESCRIPTION:
48" 1,000 Gallon Horizontal A.G. 300° Double Wall Flameshield Storage Tank

CUSTOMER: Hamilton Tanks, LLC. (Stock)

DWG.# TK-H-AG-DW-FS-300-1000-B1

PO# * SO# *

| DATE: | SCALE: | DRAWN BY: | CHECKED BY: |
|---|---|---|---|
| 2-11-2010 | N.T.S. | md | |

RECEIVED
SEP 28 2012
CITY OF DUBLIN
PLANNING

FILE COPY

12-071 MPR

APPROX. LOCATION OF TANK

# SITE PLAN

SCALE: NOT TO SCALE

FILE COPY

RECEIVED
12-071MPR
SEP 28 2012
CITY OF DUBLIN
PLANNING

STATE OF OHIO
JOHN A ONEY 57 16
REGISTERED ARCHITECT

JOHN A. ONEY
ARC.7605716
EXP. 12 / 31 / 2013

ARCHITECTURAL ALLIANCE

| | |
|---|---|
| Project | BYERS DUBLIN OIL TANK REPLACEMENT |
| Project No. | A12-070 |
| Date | 9 / 26 / 12 |

Drawing Number :

A-1.00

# ENLARGED SITE PLAN

SCALE: NOT TO SCALE

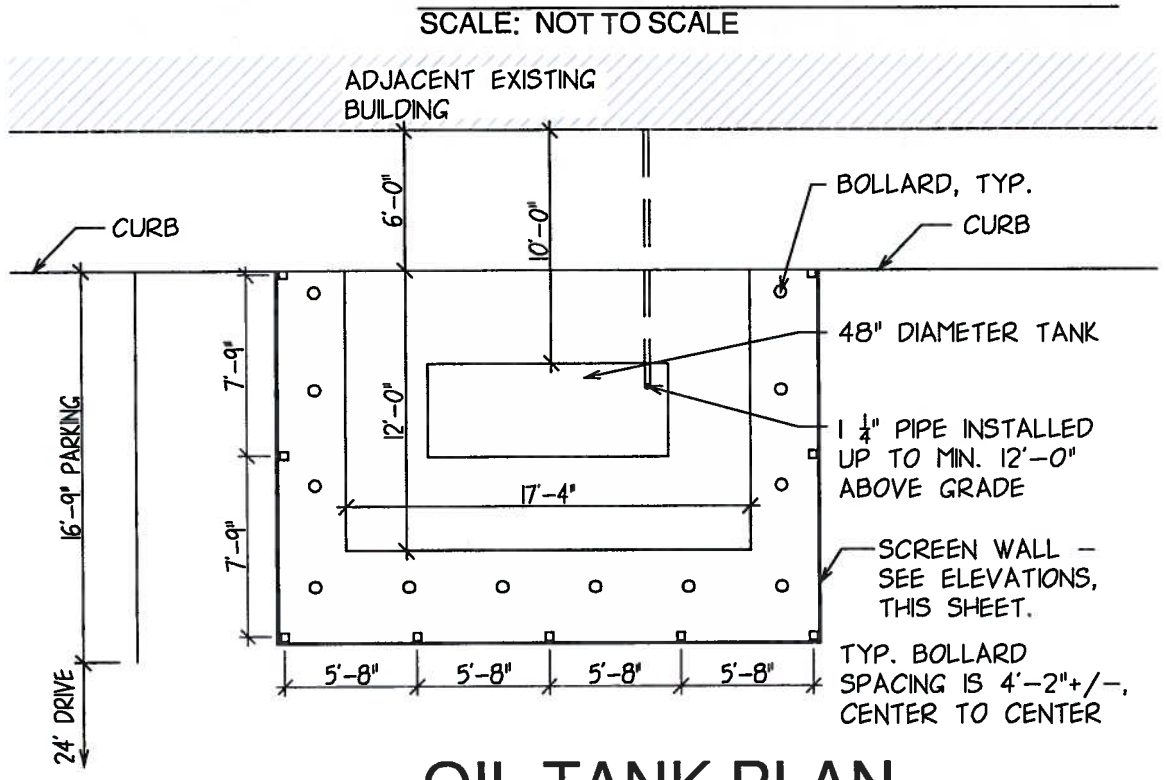


# OIL TANK PLAN

SCALE 1/8" = 1'-0"

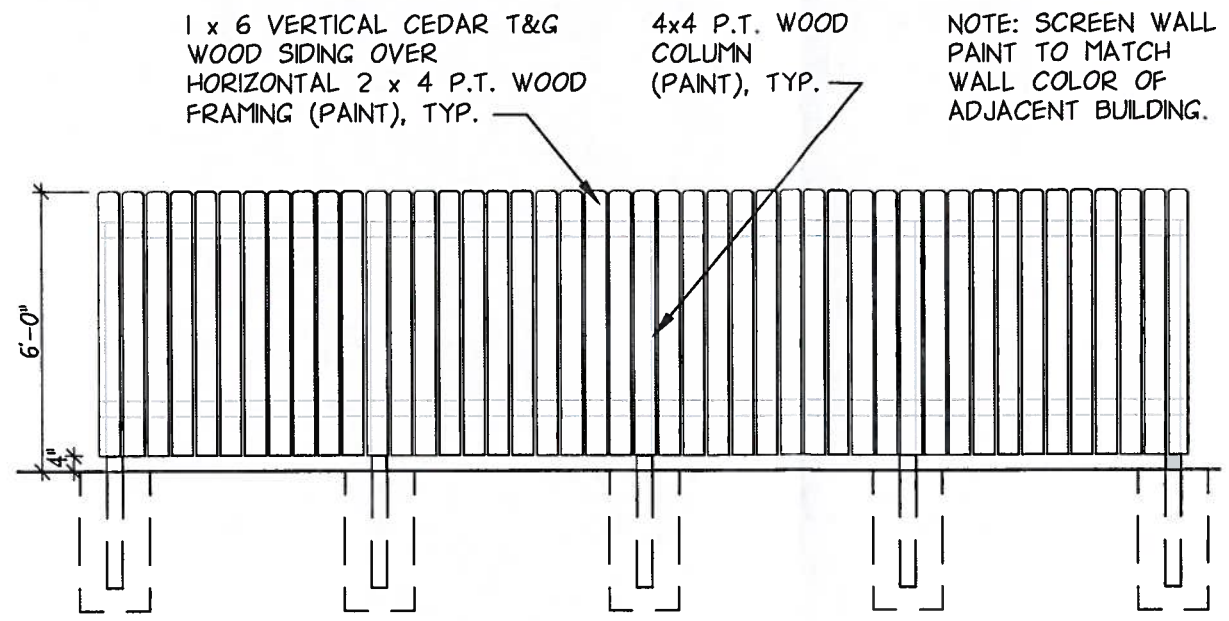


# SCREEN WALL FRONT ELEVATION

SCALE 1/4" = 1'-0"

GENERAL INFO:

PROPOSED TANK IS THE ONLY STORAGE TANK LARGER THAN 55 GALLONS ON THIS SITE.

TOTAL ABOVE GROUND STORAGE IS LESS THAN 1320 GALLONS.

TANK IS 1000 GALLON STORAGE TANK.

TANK IS DOUBLE WALLED WITH OUTER TANK CAPACITY OF 1100 GALLONS.

TANK IS ALARMED TO DETECT 80% FULL AND LEAK IN INNER TANK WALL.

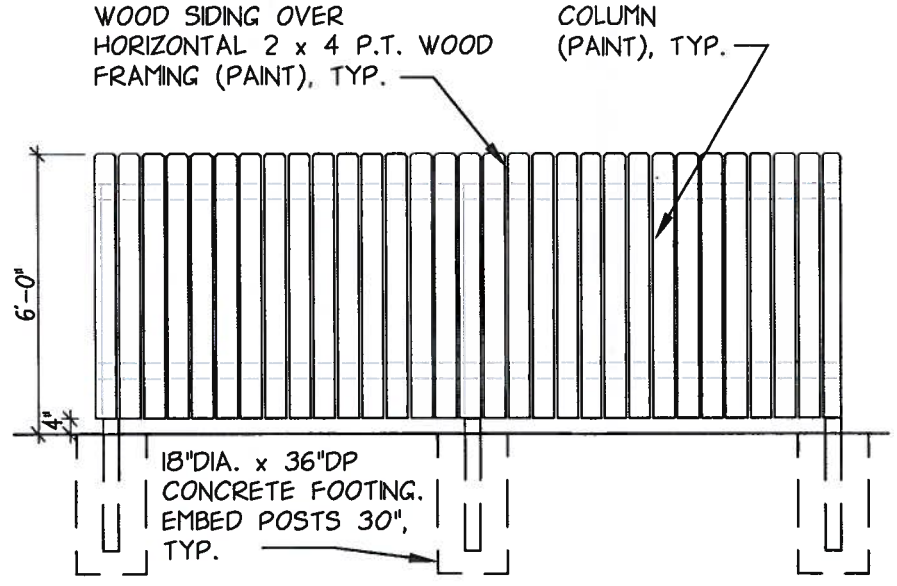


# SCREEN WALL SIDE ELEVATIONS

SCALE 1/4" = 1'-0"

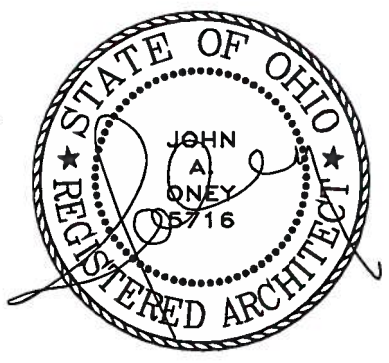


JOHN A. ONEY
ARC.7605716
EXP. 12 / 31 / 2013

ARCHITECTURAL ALLIANCE

| | |
|---|---|
| Project | BYERS DUBLIN OIL TANK REPLACEMENT |
| Project No. | A12-070 |
| Date | 9 / 26 / 12 |

Drawing Number :

A-1.01