City of Dublin

Case # 12 - 077ARB-MPR

APPLICATION FOR **DEVELOPMENT**

PLEASE CHECK THE TYPE OF REVIEW

- ☐ West Innovation Districts (Zoning Code Sections 153.037 - 153.043)
- ☒ Bridge Street Corridor Districts (Zoning Code Sections 153.057- 153.066)
- ☐ Wireless Communication Facility (Chapter 99)

PLEASE CHECK THE APPLICATION TYPE

- ☒ Basic Plan Review
- ☐ Development Plan Review
- ☒ Minor Project
- ☐ Site Plan Review
- ☐ Waiver Review
- ☐ Open Space Fee-in-Lieu
- ☐ City Council Appeal
- ☐ Master Sign Plan
- ☐ Parking Plan

Wireless Applications

- ☐ New Tower
- ☐ Alternative Structure
- ☐ Co-Location
- ☐ Temporary

The following applications require review and decision by the **Planning and Zoning Commission, Board of Zoning Appeals,** or **Architectural Review Board,** but may be submitted concurrently with another application.

Please check any that apply:

- ☐ Conditional Use
- ☐ Administrative Appeal
- ☐ Rezoning
- ☒ Project involving modifications to property within the Architectural Review District
- ☐ Other:_____

SUBMISSION REQUIREMENTS

- ☐ **Fee** (refer to the approved fees list)
- ☐ **Electronic Copies** of all application materials
- ☑ **Submission Requirements** for each type of application (refer to checklists)
- ☑ **Legal Description** for the subject property

I. PROPERTY INFORMATION: Please provide information to identify properties and the proposed development. Attach additional sheets if necessary.

Property Address(es): 35 S. HIGH ST	
Tax ID/Parcel Number(s): 273-000012	Parcel Size(s) in Acres: 0.25
Existing Land Use/Development: 404 - RETAIL	Zoning District: BSC HISTORIC CORE

☐ Check this box if any **Administrative Departures** are requested and attach an Administrative Departure request form.

☐ Check this box if any **Waivers** are requested as part of the application for development and attach a Waiver Request form.

II. PROPERTY OWNER INFORMATION: Please indicate the person(s) or organization(s) who own the property proposed for development. Attach additional pages if there are multiple property owners.

Name (Individual or Organization): THOMAS L. BASSETT	
Mailing Address: 5720 LOCH MARGE CT DUBLIN, OHIO 43017	
Daytime Telephone: 614-832-2267	Fax:
Email or Alternate Contact Information: bassettt1@yahoo.com	

FOR OFFICE USE ONLY: DIRECTOR'S ACCEPTANCE

Date of Acceptance: 10/19/2012	Next Decision Due Date: 11/2/2012
Final Date of Decision:	Determination: RECEIVED
Director's (or Designee's) Signature:	OCT 19 2012 12-077ARB-MPR CITY OF DUBLIN PLANNING

III. APPLICANT(S): Please indicate person(s) submitting the application if different than the property owner(s).

Name: (Individual or Organization) HEIDI MACHUL BOLYARD AIA, NCARB	
Mailing Address: 60 FRANKLIN ST	
Daytime Telephone: 614-774-2490	Fax: 614 389-4444
Email or Alternate Contact Information: www.bolyardstudio.com	

IV. AUTHORIZED REPRESENTATIVE(S): Please indicate the person(s) authorized to represent the property owner and/or applicants.

Name: (Individual or Organization) HEIDI BOLYARD	
Mailing Address: 60 FRANKLIN ST, DUBLIN, 43017	
Daytime Telephone: 614-774-2490	Fax: 614-653-1053
Email or Alternate Contact Information:	

V. AUTHORIZATION FOR OWNER'S APPLICANT(S)/REPRESENTATIVE(S): Please complete and notarize if applicable.

I, THOMAS L. BASSETT, the **owner**, hereby authorize HEIDI BOLYARD to act as a **representative(s)** in all matters pertaining to the processing and approval of this application, including modifying the application. I agree to be bound by all representations and agreements made by the designated representative.

Signature of Current Property Owner: Thomas L Bassett	Date: 6/2/12

☐ Please check this box if the original Authorization for Owner's Applican(s)/Representative(s) is attached as a separate document.

VI. AUTHORIZATION TO VISIT THE PROPERTY: Site visits to the property by City representatives are essential to process this application. The Owener/Applicant, as noted below, hereby authorizes City representatives to enter, photograph and post a notice on the property described in this application.

I, THOMAS L. BASSETT, the **owner** or **authorized representative**, hereby authorize City representatives to enter, photograph and/or post a notice on the property described in this application.

Signature of Owner or Authorized Representative: Thomas L Bassett	Date: 6/2/12

VII. APPLICANT'S AFFIDAVIT: This section must be completed and notarized.

I, THOMAS L. BASSETT, the **owner** or **authorized representative**, have read and understand the contents of this application. The information contained in this application, attached exhibits and other information submitted, is complete and in all respects true and correct, to the best of my knowledge and belief.

Signature of Current Property Owner or Authorized Representative: Thomas L Bassett	Date: 6/2/12

☐ Please check this box if the Applicant's Affidavit and Acknowledgement is attached as a separate document.

Subscribed and sworn to before me this 2nd day of JUNE, 20 12

State of OHIO

County of FRANKLIN

{Notary Public Seal}

NOTARY PUBLIC STATE OF OHIO

ROBERT C. BEISEL

My Comm. Expires 02/21/2017

RECEIVED

OCT 19 2012

12-077ARB-MPR

CITY OF DUBLIN

PLANNING

City of Dublin

Case # _____-_____

SITE PLAN **WAIVER** REVIEW

GENERAL INFORMATION

Please complete one Site Plan Waiver Review form for each design issue or instance and attach to the **Application for Development.**

APPLICATION REQUIREMENTS

- ☐ Completed original Application for Development
- ☐ Site Plan Waiver Review criteria statement (below, or attached)
- ☐ Associated applicable site plans/elevations/etc. clearly identifying the proposed Site Plan Waivers
- ☐ Electronic copies (PDF, JPEG, Word, etc. as appropriate) of all application materials
- ☐ 10 scaled copies (11x17 or 22x34) specifically showing the proposed Site Plan Waiver, with the Waiver clearly indicated on all other submitted plans and application materials

I. PROPERTY INFORMATION:

Provide information to identify properties and the proposed development. Attach additional sheets if necessary.

Property Address(es): 35 S. High St.

Tax ID/Parcel Number(s):	Zoning District:
273-000012	BSC Historic Core

List the Zoning Code Section for which a Waiver is requested.

Briefly describe the proposed Site Plan Waiver(s). Attach additional pages as needed.

1. Fence (To be located on property line)
2. Facade material (stucco)
3. Roof Type (Flat)
4. Transparency Requirement - (North side)

II. SITE PLAN WAIVER REVIEW CRITERIA:

Address the following review criteria specific to the proposed Site Plan Waiver (refer to Zoning Code Section 153.066(F)(4) for additional information). Attach additional pages as needed.

Describe how the need for the Site Plan Waiver is caused by unique site conditions, the use of or conditions on the property or surrounding properties, or other circumstances outside the control of the owner/lessee, including easements and rights-of-way.	See Attached
Explain whether the Waiver is being requested solely as a means to reduce costs or as a matter of general convenience.	
Explain whether the Waiver, if approved, will have the effect of authorizing any use or open space type that is not otherwise permitted in that zoning district.	
Describe how the Waiver, if approved, will ensure that the development is of equal or greater development quality with respect to design, material, and other similar features than without the Waiver.	

FOR OFFICE USE ONLY: PLANNING AND ZONING COMMISSION DETERMINATION

Administrative Review Team Recommendation:	Date of Administrative Review Team Recommendation:
Planning & Zoning Commission Determination:	Date of Planning and Zoning Commission Decision:
Notes:	

RECEIVED
OCT 19 2012
12-077ARB-MPR
CITY OF DUBLIN
PLANNING

SITE PLAN WAIVERS:

1). Fence, to be built on property line, instead of 3 feet off the property line. Constructing the fence is intended to eliminate the foot traffic from the Village Tavern, which tracks a black, greasy path across the current brick and concrete sidewalk. Building it on the property line creates a larger area for garden and lawn areas, which can be properly maintained, and will become an even greater focal point of the Historic District. It's also the natural location, connecting the rear corner of the Tavern with the corner of the Carriage House.

2).Facade Material: The proposed use of stucco will be consistent with the facade of the existing main house (stucco). Any other siding material would not relate well.

3). Roof Type: A flat roof is proposed 1) because the main house rear elevation already has a variety of roof pitches and angles, which make it difficult to add an additional roof type which would be compatible.2) roofs on sun rooms or orangeries are frequently flat.

RECEIVED

OCT 19 2012
12-077AKB-MPR
CITY OF DUBLIN
PLANNING

BOLYARD ARCHITECTURE + DESIGN STUDIO

SITE PLAN WAIVERS - CONT. – 35+39 S. HIGH STREET

4). Ground Story Non-Street Façade Transparency Requirement – North Elevation. Due to the close proximity of the blank wall of the neighboring structure the view to the North is undesirable.

RECEIVED
OCT 19 2012
12-07ARB-MPR
CITY OF DUBLIN
PLANNING

60 Franklin Street . Dublin, Ohio 43017
614.774.2490 phone . 614.633.1053 fax
www.bolyardstudio.com

City of Dublin

MINOR PROJECT REVIEW CHECKLIST

MINOR PROJECT OVERVIEW

The purpose of the Minor Project Review is to provide an efficient review process for smaller projects that do not have significant community effects. The Minor Project Review is necessary to ensure that applications meet the requirements of Chapter 153 of the Dublin Code of Ordinances.

PLEASE CHECK THE MINOR PROJECT TYPE

Refer to Zoning Code Section 153.066(G):

- ☐ Single-family detached building
- ☐ Multiple-family/single-family attached buildings (eight dwelling units or fewer)
- ☐ Non-residential structures 10,000 square feet or less
- ☐ Principal structure additions of less than 10,000 square feet or 25%, whichever is less
- ☐ Exterior modifications involving not more than 25% of the total façade area of the structure
- ☐ Signs, landscaping, parking, and other site improvements without a principal structure
- ☐ Accessory structures and uses
- ☐ Modifications to an Existing Structure
- ☐ Master Sign Plan
- ☐ Parking Plan

I. GENERAL APPLICATION REQUIREMENTS

☐	Completed original **application form** and **fee**
☑	**Project Description** (generally outline the project)
☐	General **description of conformance** to the Bridge Street Corridor Vision Report, Zoning Code Sections 153.057 - 153.065, and any approved Development Plans and/or Site Plans, where applicable
☐	**List of proposed Site Plan Waivers and/or Administrative Departures** (if known). If applicable, attach a **Site Plan Waiver** or **Administrative Departure Request Form.**

II. MINOR PROJECT PLAN:

All plans shall be labeled and include the name of the development, developer, plan scale, plan date, date(s) of revisions, location key map, and north arrow on each page. 10 scaled, folded, and collated copies (11x17 and/or 22x34 as appropriate) shall be submitted including the following information. If Planning and Zoning Commission or Architectural Review Board review is required, additional copies of materials may be requested. **Plans shall include the following information, unless otherwise waived by the Director for items determined to be unnecessary to the application.**

General Site Plan Elements

☒	Existing conditions and site features drawn to scale, including rights-of-way, vehicular and pedestrian access points, all known easements, utilities, buildings and structures, pavement, topographical features, vegetation, bodies of water, and any other relevant existing site features
☒	Proposed site plan, including project area and dimensions, area of approved Development Plan and/or Site Plan with which the project is associated, and proposed vehicular and pedestrian lot and block access configurations

Site Development

A. Use	**No change of use proposed** ☒
☐	List the proposed uses (refer to §153.059), number of dwelling units, and square footage of each use. Identify whether any use specific standards apply (refer to §153.059(C)).
B. Open Space	**No open spaces proposed/required** ☒
☐	Required open space computation and method(s) of provision identified on the plans (refer to §153.064)
☐	Open Space Types proposed (refer to §153.064(F))
☐	Request for fee-in-lieu application Yes ☐ No ☐ If yes, attach an **Open Space Fee in Lieu Request** form
☐	For each Open Space Type, identify the total acreage and dimensions (refer to §153.064(G)(1)(a)); percentage perimeter of each Open Space Type along buildings and rights-of-way; percentage of impervious and semi-pervious surfaces; and any plans for proposed improvements, including structures, water features, site amenities, etc. Provide specification sheets for all prefabricated site amenities, and elevations and material specifications for all other site improvements.
C. Parking and Loading	**No changes to parking/loading proposed** ☐
☑	Required parking computation (vehicular and bicycle) based on the proposed mix of uses (refer to § 153.065(B))
☐	Parking location and layout, including all on-site, off-site, on-street and accessible vehicular spaces, and all bicycle parking
☒	Required loading space computation (refer to § 153.065(B)(7)) and location and layout of all loading facilities
☐	Parking plan proposed Yes ☐ No ☒ If yes, provide a description and demonstration of all proposed Adjustments to Required Vehicle Parking (refer to § 153.065(B)(2)(b)), including a Demonstration of Parking Need, and evidence of any shared parking arrangements or agreements

For questions or more information, please contact Land Use and Long Range Planning at (614) 410-4600 | www.dublin.oh.us

Page 1 of 3

RECEIVED
OCT 1 8 2012
12-07 MARB-MPR
CITY OF DUBLIN
PLANNING

II. MINOR PROJECT PLAN, CONTINUED

Site Development, Continued	
D. Landscaping and Tree Preservation	**No changes to existing landscaping proposed** ☐
☑	Tree survey, including location, sizes, and types of existing trees 6 inches or greater in diameter, measured at 3½ feet off the ground, and the general location of all other existing plant materials, with an identification of materials to be removed and materials to be preserved, including any landmark trees identified on the property
☑	Tree preservation plan (refer to §153.065(D)(9))
☐	Landscape plan, including calculations showing required landscaping, and location and type of all proposed shrubs, trees, and other live plant material (refer to §153.065(D)). Indicate the proposed perimeter landscape buffering, if applicable (refer to §153.065(D)(4)), proposed surface parking and circulation area landscape treatments (refer to §153.065(D)(5)), Required Building Zone treatment (refer to §153.065(D)(6)), and all building foundation landscaping (refer to §153.065(D)(7)). Indicate any landscape areas specifically dedicated for stormwater management purposes.
☐	Planting list for proposed landscape materials with caliper size or height of material, method of installation, dates of plant installation, botanical and common names, and quantity
N/A	Landscape maintenance plan and schedule including contact information of the party responsible for maintenance
N/A	Street trees (refer to §153.065(D)(3)), including type, locations, and method of installation
E. Signs	**No signs proposed** ☐
☐	Number of proposed signs and proposed locations, including any potential ground signs or building-mounted signs. Provide elevations indicating all proposed and/or potential building-mounted signs and any other proposed signs (refer to §153.066(H))
☐	Sign design and lighting, including dimensions for all sign copy, logos, and secondary text and/or images, colors, and material specifications
☐	Master sign plan proposed Yes ☐ No ☒ If yes, include, at a minimum, all proposed locations, types, number, heights, and sizes of signs, indicated on scaled plans and/or building elevation drawings, proposed materials, colors, types of illumination, and fabrication details (refer to §153.065(H)(2)(c)6). Include a statement addressing the Master Sign Plan criteria, and identify any proposed departures from the sign regulations of §153.065(H)
F. Site Management	**No site modifications proposed** ☐
N/A	Dumpster location(s), including elevations and construction details, and waste removal plan including frequency and type of removal
☑	Proposed fences, walls, and screening methods, including types, materials, and locations (refer to §153.065(E))
N/A	Site lighting plan (refer to §153.065(F)), including locations of all site, building, and pedestrian lighting, and pole and light fixture specification sheets

Access and Circulation	Not Applicable ☐
N/A	Proposed driveways (show all driveways and intersections within 250 feet of the site) and all vehicular circulation areas. Include sight visibility triangle measurements and curb radii for all driveways and parking lot islands.
N/A	Traffic regulatory signs and pavement markings
N/A	Designation of fire lanes
☑	Location, width and materials for proposed sidewalks and non-motorized paths within the site, rights of way, or easements

Grading and Utilities	Not Applicable ☐
☐	Site grading plan, including locations of existing drainage courses, floodplains, streams, and wetlands with elevations, and method of mitigation or protection
☐	Stormwater drainage and management consistent with the requirements of Chapter 53 of the Dublin City Codes
N/A	Location(s) of sanitary sewers, existing and proposed
N/A	Location(s) and size(s) of existing and proposed water mains, well sites, water service and fire hydrants
N/A	Location(s) of above and below ground gas, electric and telephone lines, existing and proposed (refer to §153.065(G))
☑	Location(s) of transformers and utility boxes

NEED TO PROVIDE COPY EMAIL [illegible]

For questions or more information, please contact Land Use and Long Range Planning at (614) 410-4600 | www.dublin.oh.us

Page 2 of 3

RECEIVED
OCT 19 2012
12-077ARB-MPR
CITY OF DUBLIN
PLANNING

II. MINOR PROJECT PLAN, CONTINUED

Building Types and Architecture	Not Applicable ☐
☐	List and identify on the plans the building type(s) proposed (refer to §153.062). For each building type, complete and attach an **Individual Building Type Requirement Table.**
☐	The proposal involves an Existing Structure (refer to §153.062(B)(2)) Yes ☒ No ☐ If yes, provide the original gross floor area of the Existing Structure, any proposed expansions to the Existing Structure (percentage and square footage), and/or a description of any proposed exterior architectural modifications (including percentage of modifications to the original building façades)
☑	Roof plans (refer to §153.062(D)), including slopes of pitched roofs and parapet height where applicable
☑	Building sections indicating story height (refer to §153.062(N)(2))
☑	Building façade elevations for all sides, dimensioned and drawn at an appropriate scale. Include all proposed vents, gutters, downspouts, air conditioning units, and utility elements.
☑	Building materials and colors labeled on all building elevations, including material specifications (refer to §153.062(E)). Identify the percentage of each type of material on each elevation, and the percentage used on the overall building.
☑	Conceptual building floor plans
☑	Provision of architectural details and material specification sheets (as appropriate), including building entrance design, mid-building pedestrianways, windows, shutters, awnings, canopies, balconies, porches, stoops, chimneys, vehicular canopies, etc. (refer to §153.062 for general building type requirements)
N/A	Terminal vista treatments (if applicable) (refer to §153.062(J))
N/A	Method of meeting building variety requirements (if applicable) (refer to §153.062(K))

III. MINOR PROJECT REVIEW CRITERIA:

The Administrative Review Team shall review the application for a Minor Project and approve, deny, or approve with conditions, based on the criteria of §153.066(F)(5) applicable to Site Plan Reviews. The decision on the Minor Project shall be provided not more than 14 days from the filing of the Minor Project Review application, unless otherwise agreed to in writing by the City and the applicant.

Review Criteria for Minor Projects (Site Plans)	
(a)	The Site Plan shall be substantially similar to the approved Basic Plan;
(b)	If a Development Plan has been approved that includes the property, the application is consistent with the Development Plan;
(c)	The application meets all applicable requirements of §153.059 and §§153.062 through 153.065 except as may be authorized by Administrative Departure(s) pursuant to §153.066(H);
(d)	The internal circulation system and driveways provide safe and efficient access for residents, occupants, visitors, emergency vehicles, bicycles, and pedestrians;
(e)	The relationship of buildings and structures to each other and to other facilities provides for the coordination and integration of the development within the surrounding area and the larger community and maintains the image of Dublin as a high quality community;
(f)	The application is consistent with the requirements for types, distribution, and suitability of open space in §153.064 and the site design incorporates natural features and site topography to the maximum extent practicable;
(g)	The scale and design of the proposed development allows the adequate provision of services currently furnished by or that may be required by the City or other public agency including, but not limited to, fire and police protection, public water and sanitary sewage services, recreational activities, traffic control, waste management, and administrative services;
(h)	Stormwater management systems and facilities will not cause alterations that could increase flooding or water pollution on or off the site, and removal of surface waters will not adversely affect neighboring properties;
(i)	If the development is to be implemented in phases, each phase is able to be considered independently, without the need for further phased improvements; and
(j)	The application demonstrates consistency with the BSC Vision Report, Community Plan and other related policy documents adopted by the City.

RECEIVED
OCT 19 2012
12-077ARB-MPR
CITY OF DUBLIN
PLANNING

ARCHITECTURAL REVIEW BOARD

This application proposes an addition to 35 S. High St of approximately 450 sq. ft., (20 x 22 ft.) located adjacent to the northwest corner of the existing structure. The one story addition is intended to add much needed space for an existing business , which has been at this location for over 10 years. The design reflects a sun room or solarium, with large windows on the east and west elevations. The space is meant to replace a second floor classroom used for knitting classes. The room is meant to facilitate elderly and handicapped patrons who cannot negotiate the stairway in the existing historic structure. That second floor space will become a storage room. The space will also become a casual, comfortable, and inviting space for patrons to relax and enjoy their art.

The second objective of this design is to dramatically improve the northwest elevation of the building, which is plain and uninviting. Future development of the area surrounding the building will create gardens with perennials and outdoor seating, creating an oasis in the historic district.

The addition will be one story with stucco finish, with paint color to match main building, and include detailing below the windows. Windows will be white clad SDL windows by Anderson.

The proposed additions and changes meet the guidelines of Historic Dublin, and will significantly enhance this building and the District, and make allow this longtime business to remain in Dublin, and better serve it's clientele.

Tom Bassett

RECEIVED

OCT 19 2012

12-077 ARB MPR

CITY OF DUBLIN
PLANNING

Instr:199911080280236 11/08/1999
Pages:5 Fee:$26.00 2:00PM
Richard B. Metcalf T19990156370
Franklin County Recorder MEPSCHOTTE

EASEMENT AND MAINTENANCE AGREEMENT

This agreement is entered into this 5th day of November, 1999, between Thomas Bassett, as Grantor, (hereinafter called "Grantor"), and the City of Dublin, an Ohio municipal Corporation, (hereinafter called "Dublin"), who in consideration of the mutual covenants and conditions contained herein agree as follows:

BACKGROUND INFORMATION

A. Grantor is the fee simple owner of the property commonly known as 35-39 S. High Street, Dublin, Ohio 43017 (the Grantor's property) and being further described as:

Situated in the City of Dublin, County of Franklin and in the State of Ohio:

Being Lot Number One Hundred Forth (140) in the Town of Dublin, as the same is numbered and delineated upon the recorded plat thereof, of record in Deed Book No. 1, page 193, Recorder's Office, Franklin County, Ohio.

Parcel Number: 273-000012-00

B. Dublin is the fee simple owner of the property commonly known as 27-29 S. High Street, Dublin, Ohio 43017, and being further described as:

Situated in the County of Franklin, in the State of Ohio, and in the Village of Dublin and bounded and described as follows: Thirty-two (32) feet off of the south side of Lot No. One Hundred Forty-one (141) in the Town of Dublin, the said Thirty-two (32) feet commencing at the Southeast (S.E.) corner of said Lot One Hundred Forty-one (141), running north Thirty-two (32) feet, thence west the full depth of said lot; thence south Thirty-two (32) feet; thence east the full depth of said lot to the place of beginning, and being the same premises conveyed by Charles H. Landers and wife to Charles L. Pinney by deed dated January 18, 1889 and recorded in Deed Book 200. Pages 454, 455, and 456, Recorder's Office, Franklin County, Ohio, Auditor's Parcel No. 273-62, known as 27-29 South High Street, Dublin, Ohio.

RECEIVED
OCT 19 2012
12-077ARB-MPK
CITY OF DUBLIN
PLANNING

Parcel Number: 273-000062-00

C. Currently the building on the Dublin property encroaches over and through a portion of Grantors property, the location of which is as shown on the survey plat attached hereto as Exhibit "A".

CONVEYANCE TAX
EXEMPT
JOSEPH W. TESTA
FRANKLIN COUNTY AUDITOR

TRANSFERRED
NOT NECESSARY
NOV 0 8 1999
JOSEPH W. TESTA
AUDITOR
FRANKLIN COUNTY, OHIO

D. Dublin wishes to establish an easement area over part of the Grantors property for purposes of maintaining the building and enter into an agreement to allow the building to remain in the easement area.

NOW THEREFORE, in consideration the mutual covenants and agreements herein contained, both parties agree as follows:

1. Easement: Grantor hereby grants to Dublin an easement in, through, over and under the real estate described in the attached Exhibit "B" attached hereto and made a part hereof.

2. Noninterference: All parties hereby agree that neither party shall obstruct, impede or interfere with the other in the reasonable use of each others property for the purpose of maintaining the building on the Grantors property.

3. Alternation, Maintenance and Repairs: Any material alteration or change to that part of the building that is in the easement area as it is presently located shall require consent of all parties. Said consent shall not be unreasonably withheld. Dublin hereby agrees to maintain and repair the building to preserve its present condition. The cost of said maintenance and repair shall by borne by Dublin.

4. Use: Dublin agrees and warrants that the use of the easement area shall be for the use of the building as it currently is located and for maintaining the building only and the easement area shall not be used for any other purposes than for maintaining the building and reasonable entry to do maintenance and repair onto the property of Grantor. It is further agreed that the use of the easement area is non-exclusive so long as any use by the Grantor does not interfere with the maintenance of the building. Any damage or destruction to the property of the Grantor by said use shall be the expense of Dublin.

5. Miscellaneous: The benefits and liabilities of this agreement shall inure to parties, their heirs, successors and assigns. This agreement shall run with the land and shall be binding on all future owners of the lots. This agreement may only be modified or amended by mutual agreement of both parties, in writing, and any such modification or amendment shall be recorded with the Franklin County Recorder. The easement granted herein shall terminate when the building shall no longer exist or upon agreement of the parties.

RECEIVED
OCT 19 2012
12-077 ARB-MPR
CITY OF DUBLIN
PLANNING

In witness whereof, the undersigned have executed this agreement on the date above mentioned.

Witness

Thomas Bassett

Stephen S. DeWeese
(Print Name)

Witness

MARK CREAMER
(Print Name)

CITY OF DUBLIN

Witness

By:

MYRA A. CAPLINGER
(Print Name)

Its: CITY MANAGER
DUBLIN, OHIO

Witness

JUDITH A. GROSZ
(Print Name)

STATE OF OHIO,
COUNTY OF FRANKLIN, ss:

I HEREBY CERTIFY that on this day, before me, an officer duly authorized in the state and county aforesaid to take acknowledgments, personally appeared Thomas Bassett, to me known and known to be the person described in and who executed the foregoing instrument as the Grantor for the uses and purposes herein described.

WITNESS my hand and official seal in the county and state last aforesaid this 14th day of OCTOBER, 1999.

Notary Public

MARK CREAMER
NOTARY PUBLIC, STATE OF OHIO
MY COMMISSION EXPIRES
JULY 18, 2001

RECEIVED
OCT 19 2012
12-077ARB-MPR
CITY OF DUBLIN
PLANNING

STATE OF OHIO,
COUNTY OF FRANKLIN, ss:

I HEREBY CERTIFY that on this day, before me, an officer duly authorized in the state and county aforesaid to take acknowledgments, personally appeared the City of Dublin, by Timothy C. Hansley, its City Manager, to me known and known to be the person described in and who executed the foregoing instrument as the Grantee for the uses and purposes herein described.

WITNESS my hand and official seal in the county and state last aforesaid this 5th day of November, 1999.

Linda L. Gilliam
Notary Public

LINDA L. GILLIAM
NOTARY PUBLIC, STATE OF OHIO
MY COMMISSION EXPIRES SEPT. 12, 2001
9/12/2001

F:\szd\Stevenss\35505eger.913\Conveyance Documents\Easement and Maintenance Agreement.doc

RECEIVED
OCT 19 2012
12-077ARB-MPR
CITY OF DUBLIN
PLANNING

LEGAL DESCRIPTION
0.0064 Acres

A small tract of land located in the northeast corner of Lot 140 of the original Town of Dublin as recorded in Plat Book 1, Page 193 in the Franklin County Records and being a portion of the same property conveyed to George and Zora Eger, Deed Book 1704, Page 97 of the Franklin County Records, and more particularly described by metes and bounds as follows;

Beginning at an existing iron pin which marks the northeast corner of Lot 140 of the original Town of Dublin, run South 08 degrees 00 minutes 00 seconds East along the west line of Dublin Road(South High Street), 4.00 feet, to a 5/8 inch rebar set with cap;

Thence, South 81 degrees 34 minutes 45 seconds West parallel to the north line of said Lot 140, 70.00 feet, to a 5/8 inch rebar set with cap;

Thence, North 08 degrees 00 minutes 00 seconds West, 4.00 feet, to a 5/8 inch rebar set with cap in the north line of said Lot 140; thence, North 81 degrees 34 minutes 45 seconds East, along the orginal north line of said Lot 140, 70.00 feet, to the POINT of BEGINNING.

Base line for bearings is South 08 degrees 00 minutes 00 seconds East, the west line of High Street.

Containing 280 square feet (0.0064 acres), all in Franklin County, Ohio.

Subject to all easements and right-of-ways of record.

Surveyed by David E. Slagle #7408 during September 1999.

David E. Slagle 9-15-99

David E. Slagle Registered Ohio Surveyor #7408 Date

PRELIMINARY APPROVAL
FRANKLIN COUNTY ENGINEERING DEPT.
DATE: 9/21/99 BY: BM
Need Deep format

STATE OF OHIO
DAVID E. SLAGLE 7408
REGISTERED PROFESSIONAL SURVEYOR

RECEIVED
OCT 19 2012
12-077ARB-MPR
CITY OF DUBLIN
PLANNING

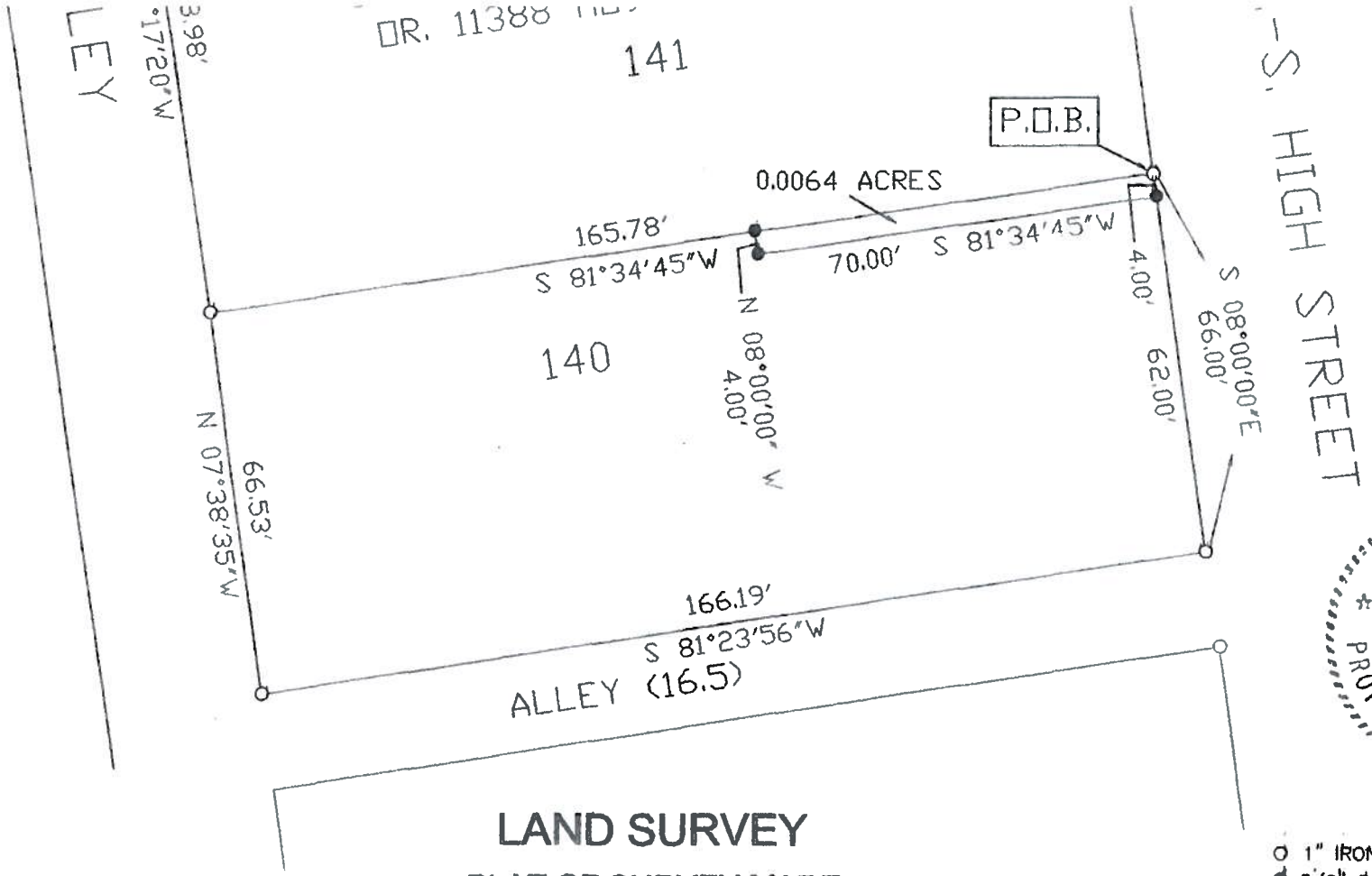

RECEIVED
OCT 19 2012
CITY OF DUBLIN
PLANNING

STATE OF OHIO
DAVID E. SLAGLE
7408
REGISTERED
PROFESSIONAL SURVEYOR

LAND SURVEY

PLAT OF SURVEY MADE
for:
CITY OF DUBLIN

SHOWING A SMALL TRACT
70' x 4' IN THE N.E. CORNER OF
LOT 140 OF ORIGINAL TOWN OF DUBLIN AS
RECORDED IN PLAT BOOK #1 PAGE 193 IN
FRANKLIN COUNTY RECORDS.
SURVEY MADE DURING SEPT, 1999

by David E. Slagle 9-15-99
David E. Slagle P.S. #7408 Date

○ 1" IRON PIN FOUND
● 5/8" REBAR & YELLOW PLASTIC CAP STAMPED "XYZ 7408" (SET)
∘ P K NAIL

ALL MONUMENTS FOUND OR SET ARE IN GOOD CONDITION UNLESS OTHERWISE NOTED.

MADE FOR:	CITY OF DUBLIN		
XYZ	DATE: 9/13/99	JOB NO	99137
	SCALE: 1" = 30'	F.B NO	
	REVISED:	MAP NO	99137
SURVEY SERVICE INC. 3958 LaROSA CT GROVE CITY OH 43123 FAX: 614-875-6872 PH: 614-871-4980		DRAWN BY:	M.P.G.
		CKD BY:	D.E.S.
		CAD FILE	99137

LEGAL DESCRIPTION
0.0064 Acres

A small tract of land located in the northeast corner of Lot 140 of the original Town of Dublin as recorded in Plat Book 1, Page 193 in the Franklin County Records and being a portion of the same property conveyed to George and Zora Eger, Deed Book 1704, Page 97 of the Franklin County Records, and more particularly described by metes and bounds as follows;

Beginning at an existing iron pin which marks the northeast corner of Lot 140 of the original Town of Dublin, run South 08 degrees 00 minutes 00 seconds East along the west line of Dublin Road(South High Street), 4.00 feet, to a 5/8 inch rebar set with cap;

Thence, South 81 degrees 34 minutes 45 seconds West parallel to the north line of said Lot 140, 70.00 feet, to a 5/8 inch rebar set with cap;

Thence, North 08 degrees 00 minutes 00 seconds West, 4.00 feet, to a 5/8 inch rebar set with cap in the north line of said Lot 140; thence, North 81 degrees 34 minutes 45 seconds East, along the orginal north line of said Lot 140, 70.00 feet, to the POINT of BEGINNING.

Base line for bearings is South 08 degrees 00 minutes 00 seconds East, the west line of High Street.

Containing 280 square feet (0.0064 acres), all in Franklin County, Ohio.

Subject to all easements and right-of-ways of record.

Surveyed by David E. Slagle #7408 during September 1999.

David E. Slagle — 9-15-99

David E. Slagle Registered Ohio Surveyor #7408 — Date

PRELIMINARY APPROVAL
FRANKLIN COUNTY ENGINEERING DEPT.
DATE: 9/21/99 BY: BM
Need Deep formed

STATE OF OHIO
DAVID E. SLAGLE 7408
REGISTERED PROFESSIONAL SURVEYOR

RECEIVED
OCT 19 2012
12-077ARB-MPR
CITY OF DUBLIN
PLANNING

BOLYARD ARCHITECTURE + DESIGN STUDIO

DESCRIPTION OF CONFORMANCE – 35+39 S. HIGH STREET

Site Development

A. Use
   - Existing Retail Use to remain.

B. Open Space
   - Not Required.

C. Parking and Loading
   - NEW ADDITION - 500.6 SQUARE FEET
   - PARKING REQUIREMENT 2 SPACES PER 1000 SQUARE FEET
   - REQUIRED PARKING FOR NEW ADDITION 1.5 SPACES
   - See Parking Plan for locations.

D. Landscaping and Tree Preservation
   - All existing trees to remain.

E. Signs
   - New sign and hanging bracket on existing structure on South side of East wall. See site plan and elevations for exact locations.
   - New surface mounted sign on existing structure on South side of West wall. See site plan and elevations for exact locations.
   - New sign and hanging bracket on new structure on South side of West wall. See floor plan, site plan and elevations for exact locations.

F. Site Management
   - New cedar fence, painted white.
   - See site plan for location.
   - See enclosed detail for additional information.

Access and Circulation
- East side of new structure – new 48" concrete path, steps and landing.
- South Side of new structure – new 42" X 36" concrete landing.

Grading and Utilities
- Grade around new structure to sloped away from foundation at 6" in the first 10'.
- Existing site grading and swale to remain.
- Existing Sanitary sewer line to remain.
- Existing water mains, water service and fire hydrants to remain.
- Existing gas lines and meters to remain.
- Electrical lines to be relocated, see Site Plan.
- Telephone lines to be relocated, see Site Plan.
- Existing transformers to remain.
- Electrical meters to be relocated, see Site Plan.

Building Types and Architecture
- Historic Cottage Commercial
  1. Street Frontage
     - Addition tucked behind existing structure.
  2. Building Area
     - Side Yard 8' +/-.
     - LOT SIZE - 5,346 SQUARE FEET
     - EXISTING BUILDING - 2,386 SQUARE FEET
     - NEW ADDITION - 500.6 SQUARE FEET

RECEIVED
OCT 19 2012
12-077ARB MPR
CITY OF DUBLIN
PLANNING

60 Franklin Street . Dublin, Ohio 43017
614.774.2490 phone . 614.633.1053 fax
www.bolyardstudio.com

- IMPERVIOUS COVERAGE, MAXIMUM - 4,009.5
- TOTAL IMPERVIOUS COVERAGE - 3,266

3. Parking Location & Loading
   - 1.5 parking spaces required.
   - See Parking Plan for additional information.
4. (b) Height
   - One story addition to a two-story structure.
5. (c) Uses & Occupancy Requirements
   - Retail Use
6. (d) Façade Divisions
   - Street Façade Transparency - 51% - East.
   - Non-Street Façade Transparency – 28% - South.
   - Non-Street Façade Transparency – 50% - West.
   - Non-Street Façade Transparency – 4% - North.
   - Building Entrance – Addition to an existing structure.
   - Façade Divisions – Largest Façade only 22'-0"
   - Façade Materials – Requesting a waiver for the use of stucco on the addition as stucco is the primary material on the original structure. New stucco to match texture of existing stucco. New and existing stucco to be painted.
   - Roof Types – Requesting a waiver for the use of a flat roof.

- Addition to an existing structure.
- All plans, elevations are enclosed.
- Existing structure to be painted, see Elevations for additional information.

Other Project Materials

- New windows to be Andersen 400 series to match existing. See enclosed cut sheets for additional information.
- New doors to be Andersen 400 series to match existing. See enclosed cut sheets for additional information.
- Leaderhead to be galvanized steel and painted white. See enclosed cut sheets for additional information.
- Downspouts to be 3" round aluminum and prefinished high gloss white. See enclosed cut sheets for additional information
- Coach light to match existing light fixtures. Illumine, 1-light, outdoor lantern. Bronze finish, clear seeded glass panels.

RECEIVED
OCT 19 2012
12-077HRB-111PR
CITY OF DUBLIN
PLANNING

36"

18"

Logo
11.44" x 7.77"

Text
5.32" x 26.22"

2"

18"

Side View

CNC routed HDU (High Density Urethane)
QTY (2) Double sided, Recessed carved lettering, Raised border and dimensional raised border for sheep and body.
Finished in oil-based sign enamels.
Black, White and Brilliant Gold (a "gold leaf" gold paint)
QTY (1) Single sided CNC routed HDU

199-Black

101-White

Matthews Brilliant Gold

Proposed Hanging Bracket -
40" Recommended

TORINO SCROLL BRACKET

20 40 50 INCH WIDTHS

QTY (2) Brackets

SIGN DESIGN & FABRICATION Inc

Production Proof

Thank you for your order!

This is your SDF Production Proof. Please approve via the email you recieved, OR notify your Sales Rep immediately of any changes

RECEIVED

OCT 19 2012
12-077HRB-MPR
CITY OF DUBLIN
PLANNING

SIGN DESIGN & FABRICATION INC

Color Samples for Temptations signage Project.
Contact: Tom Bassett 614-832-2267
POB 103
Dublin, OH 43017

Dated: 9/18/12

199-Black

101-White

MP Brilliant Gold

** All colors 1-Shot! And Matthews Oil based sign enamels.

RECEIVED
OCT 19 2012
12-077ARB-MPR
CITY OF DUBLIN
PLANNING

Customer Approval – Tom Bassett

35 Breakstone Drive, Dahlonega, GA 30533

Cart Summary

Your Cart is Empty
View Cart

Search

Search
Go

Navigation

GUTTERS
- Gutters Copper
- Gutters Aluminum
- Gutters Galvanized
- Gutters Vinyl - Plastmo®
- Gutters European Zinc
- Gutters Paint Grip Steel
- Gutters Galvalume Plus
- Gutters Kynar® Steel
- Gutters Steel European
- Commercial Gutters
- Downpipe / Leader
  - **Downpipe Aluminum**
    - **Aluminum Color Swatch**
    - Downspout Alum .016 2x3 Square Corrugated10 Feet
    - Downspout Alum .019 2x3 Square Corrugated 10 Feet
    - Downspout Alum .019 2x3 Square Corrugated 100 Feet
    - Downspout Alum .019 3x4 Square Corrugated 10 Feet
    - Downspout Alum .019 Square Corrugated 3x4 100 Feet
    - Downspout Alum .032 Plain Square 3"x 4" 10 Feet
    - **Downspout Alum .019 3" Plain Round 10 Feet**
    - Downspout Alum .024 4" Plain Round 100 Feet
    - Downspout Alum .019 4" Plain Round 10 Feet
    - Downspout Alum .024 4" Plain Round High-Gloss White 10 Feet
    - Downspout Alum .027 4x5 10 Ft
    - Downspout Alum .024 SC 4x5

Downspout Alum .019 3" Plain Round 10 Feet

3" Plain Round Aluminum Downspout - 10 Foot Section

- Made from .019" aluminum.
- Each piece is 10 feet in length.
- Available in High Gloss White and Royal Brown.
- Custom colors require 15% surcharge and extended lead time.
- All gutter and downspout must be shipped in protective crate to insure quality.
- ***All shipping and crating cost must be approved by you prior to fulfillment of your order.

Weight: 2 lb

Price: $17.00

Aluminum Gutter Colors White(Hi-Gloss)

1 BUY

Related Items:

Elbow Alum 3" Plain Round 75° Bend Royal Brown

Our 3" plain round aluminum elbow with 75° bend. Ideal for downspouting with our 5" half round gutter system. Three are typically required per downspout assembly. Made from .019" aluminum with a baked-on enamel Royal Brown finish.
Suggested Price . . . . . $ 3.99

Price: $3.58

1 BUY

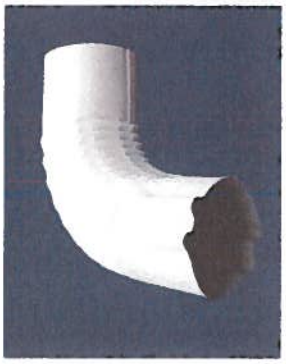

Elbow Alum 3" Plain Round 75° Bend White

Our 3" plain round aluminum elbow with 75° bend. Three are typically required per downspout assembly. Made from .019" aluminum with a high gloss white finish.
Suggested Price . . . . . $ 4.19

Price: $3.58

Aluminum Stock Colors High Gloss White

1 BUY

RECEIVED
OCT 19 2012
12-077ARB-MPK
CITY OF DUBLIN
PLANNING

Elbow Alum 3" Plain Rd. 30° Bend Brown

Use our 30° Bend 3" plain round elbow when downspout needs to route around offsets or areas requiring a slight bend. All 3" round elbows are

ARCHITECTURAL SERIES

THE MONARCH LEADERHEAD

C&J METAL PRODUCTS, INC.

800-500-8660 562-634-3101 FAX:562-634-8823 WWW.CJMetals.com

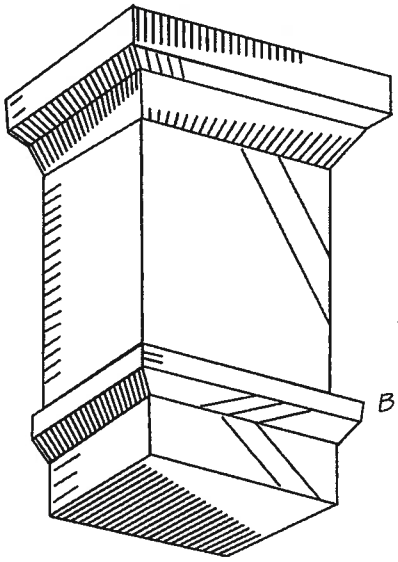

Our leaderheads are handmade to order and available in copper, lead-coated copper or galvanized steel. Each unit is fully soldered (no rivets). Included is an outlet to your size requirements or a solid bottom.

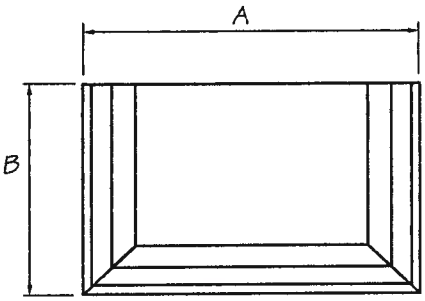

TOP VIEW

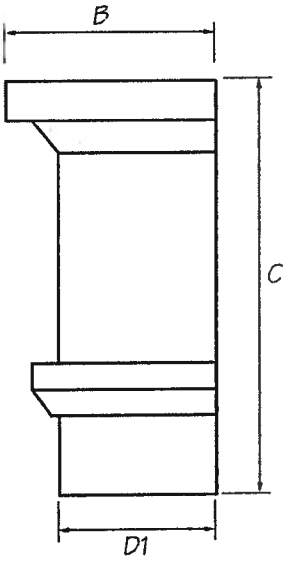

SIDE VIEW

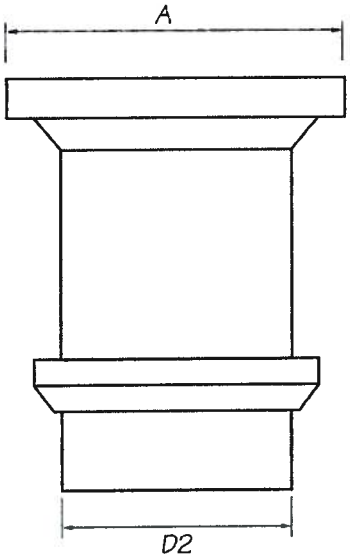

FRONT VIEW

NOTE: *Be sure to specify outlet size when ordering.*

PRODUCT SPECIFICATIONS:

OUTLET SIZING (CHECK ONE)

- ___ 2" RND DOWNSPOUT
- X 3" RND DOWNSPOUT
- ___ 4" RND DOWNSPOUT
- ___ 5" RND DOWNSPOUT
- ___ 2" x 3" REC DOWNSPOUT
- ___ 3" x 4" REC DOWNSPOUT
- ___ 4" x 4" REC DOWNSPOUT
- ___ 4" x 6" REC DOWNSPOUT
- ___ BLANK BOTTOM PLATE

AVAILABLE MATERIALS:

(CHECK ONE)

- ___ **COPPER**
  ASTM B370, ALLOY 110, BURNISHED SATIN FINISH
- ___ **LEAD-COATED COPPER**
  ASTM B101, MILL FINISH
- X **GALVANIZED STEEL**
  ASTM A653 26GA, ASTM D2092 MILL PHOSPHATIZED FINISH READY FOR PAINT

INSTALLATION:

OTHER INFORMATION:

PATTERN SIZES (CHECK ONE)

	A	B	C	D1	D2
	M1 13"	8"	14"	6"	9"
X	M2 9"	$5^{3/4}$"	$13^{3/8}$"	$3^{3/4}$"	$5^{1/4}$"

RECEIVED
OCT 19 2012
12-077ARB-MPR
CITY OF DUBLIN
PLANNING

Illumine 1 Light Outdoor Lantern Antique Bronze Finish Clear Seeded Glass Panels

Model # CLI-FRT18006-01-32

Internet # 203090053

PRODUCT DESCRIPTION

The Burton Collection supplied by CLI features a wide variety of classic fixtures. If you are looking for a sensible way to dress up a room, there is no better choice than this 1 Light Outdoor Lantern in a Antique Bronze Finish complimented by Clear Seeded Glass Panels . From the modest chandeliers to the more rustic outdoor lighting, the Burton Collection will add a charming accent to any application.

- 1 light outdoor lantern
- Antique bronze finish
- Clear seeded glass panels
- UL listed for safety
- MFG Brand Name : Illumine
- MFG Model # : CLI-FRT18006-01-32
- MFG Part # : CLI-FRT18006-01-32

SPECIFICATIONS

Assembled Depth (in.)	6.0 in	Assembled Height (in.)	13.0 in
Assembled Width (in.)	13.0 in	Bulb Type	Incandescent
CSA Listed	Yes	Color/Finish	Antique Bronze Finish
Dusk to Dawn	No	ETL Listed	No
Energy Star Compliant	No	Exterior Lighting Product Type	Wall Mount Light
Fixture Finish	Antique Bronze Finish	Fixture Material	Metal
Glass/Lens Type	Clear	Light Source	Incandescent

RECEIVED
OCT 19 2012
CITY OF DUBLIN
PLANNING

Assembled Depth (in.)	6.0 in
Manufacturer Warranty	This item has a limited one year manufacturer's warranty.
Motion Sensor	No
Product Height (in.)	13.0
Product Weight (lb.)	5.07
Returnable	90-Day
Solar Powered	No
Weather Resistant	Yes

Assembled Height (in.)	13.0 in
Maximum Bulb Wattage	100.0 W
Number of Bulbs Required	1
Product Length (in.)	6.0
Product Width (in.)	13.0
Size	Medium
Style	Classic

RECEIVED
OCT 19 2012
12-077ARB-MPR
CITY OF DUBLIN
PLANNING

Features

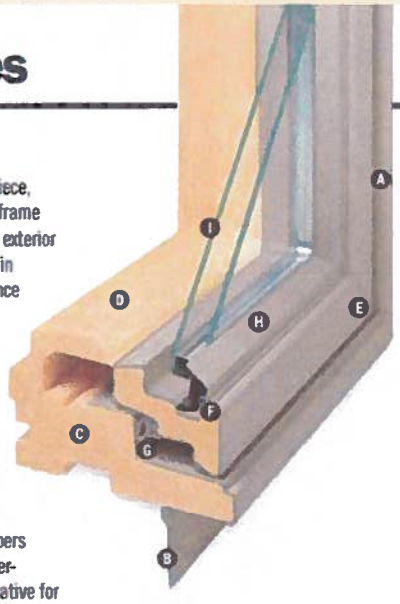

FRAME

Ⓐ A seamless one-piece, pre-formed rigid vinyl frame cover is secured to the exterior of the frame to maintain an attractive appearance while minimizing maintenance.

Ⓑ The full perimeter installation flange is seamless and integrated with the exterior of the frame.

Ⓒ Wood frame members are treated with a water-repellent wood preservative for long-lasting* protection and performance.

Ⓓ Interior stops are unfinished pine. Low-maintenance prefinished white interiors are also available.

SASH

Ⓔ Rigid vinyl (PVC) encases the entire sash—a vinyl weld protects each sash corner for superior weathertightness to maintain an attractive appearance and minimize maintenance.

Ⓕ Wood core members provide excellent structural stability and energy efficiency.

Ⓖ Flexible bulb weather-stripping or PVC closed-cell foam weatherstripping is factory-installed on the perimeter of the sash.

GLASS

Ⓗ A glazing bead and silicone provide superior weathertightness and durability.

Ⓘ High-performance™ glass options include:

- Low-E4® glass
- Low-E4® SmartSun™ glass
- Low-E4® Sun glass

Tempered glass and other glass options are available. Contact your Andersen supplier. (Glass option must be specified.)

HARDWARE

Smooth Control™ Hardware System

The Smooth Control™ hardware system employs a worm gear drive for easy operation. The split-arm operator moves the sash away from the frame to provide for easier glass cleaning. (Hardware option and finish must be specified.) CXW15, CXW155, CXW16 and CXW25 units are not available with split-arm hardware. Handle and cover sold separately.

Single-Actuation Casement Lock

A single-actuation lock releases the casement sash easily while the "reach-out" action eliminates binding when closing. The lock handle is offered in finishes that coordinate with your specified hardware option.

Awning Sash Locks

Awning sash locks provide an added measure of security and weathertightness. Hardware style and finish options are compatible with Andersen casement windows to ensure consistency in appearance when used in combination designs.

* For complete information on our limited warranties, visit andersenwindows.com or contact your Andersen supplier.

Exterior

Specify a unit exterior option and an interior option to complete your order.

White | Sandtone | Terratone® | Forest Green

Interior

white | pine

Naturally occurring variations in grain, color and texture make each window one-of-a-kind.

RECEIVED
OCT 19 2012
12-077ARB-MPR
CITY OF DUBLIN
PLANNING

Hardware

Sold Separately.

Estate™ Hardware

Made of solid brass. Available with bright brass, **antique brass**, polished chrome, brushed chrome, satin nickel, oil rubbed bronze, distressed nickel and distressed bronze finishes.

Folding Hardware

Folding handles avoid interference with window treatments.

NEW FINISHES

Contemporary

Available in bright brass, **satin nickel**, oil rubbed bronze, white, stone, gold dust or black finish.

Traditional

Available in bright brass, antique brass, satin nickel, oil rubbed bronze, **distressed bronze**, white, stone, gold dust or black finish.

Classic Series™ Hardware

Available in white or **stone** finish.

Bold names denote finish shown.

Hardware Finishes

bright brass | antique brass | polished chrome | brushed chrome | satin nickel | oil rubbed bronze | distressed nickel | distressed bronze | white | stone | gold dust | black

Printing limitations prevent exact finish replication. See your Andersen supplier for actual finish samples.

CASEMENT & AWNING WINDOWS

Table of Casement and Transom Window Sizes

Scale 1/8" = 1'-0" (1:96)

Window Dimension	1'-5"	1'-8 1/2"	2'-0 1/8"	2'-4 3/8"	2'-7 1/2"	2'-11 15/16"	2'-9 3/4"	3'-4 3/4"	4'-0"	4'-8 1/2"
Minimum Rough Opening	1'-5 1/2"	1'-9"	2'-0 5/8"	2'-4 7/8"	2'-8"	3'-0 1/2"	2'-10 1/4"	3'-5 1/4"	4'-0 1/2"	4'-9"
Unobstructed Glass (casement, single sash only)	12 5/8"	16 1/8"	19 3/4"	24"	27 1/8"	31 9/16"	12 5/8"	16 1/8"	19 3/4"	24"
Unobstructed Glass (transom, single sash only)	12 3/16"	15 11/16"	19 5/16"	23 9/16"	26 11/16"	31 1/8"	28 15/16"	35 15/16"	43 3/16"	51 11/16"

CUSTOM WIDTHS — 1'-5" to 7'-0 5/8"

Height	Width	Dimension	1'-0"	1'-0"	1'-0"	1'-0"	1'-0"	1'-0"	1'-0"	1'-0"	1'-0"	1'-0"
1'-0"	1'-0 1/2"	7 3/16"	CTR1510	CTR1810	CTR2010	CTR2410	CTR2810	CTR3010	CTR2910	CTR3410	CTR4010	CTR4810
1'-0"	1'-0 1/2"	7 3/16"								CTR21810	CTR22010	CTR22410

CUSTOM WIDTHS — 1'-5" to 2'-11 7/8"

CUSTOM HEIGHTS — 2'-0 1/8" to 5'-11 7/8"

Height	Width	Dimension	1'-5"	1'-8 1/2"	2'-0 1/8"	2'-4 3/8"	2'-7 1/2"	2'-11 15/16"	2'-9 3/4"	3'-4 3/4"	4'-0"	4'-8 1/2"
2'-0 1/8"	2'-0 5/8"	19 5/16"	CR12	CN12	C12	CW12*				CN22	C22	CW22*
2'-4 3/8"	2'-4 7/8"	23 9/16"	CR125	CN125	C125	CW125*	CX125			CN225	C225	CW225*
2'-11 15/16"	3'-0 1/2"	31 1/8"	CR13	CN13	C13	CW13*	CX13	CXW13	CR23	CN23	C23	CW23*
3'-4 13/16"	3'-5 3/8"	36"	CR135	CN135	C135	CW135◊*	CX135◊	CXW135◊	CR235	CN235	C235	CW235◊*
4'-0"	4'-0 1/2"	43 3/16"	CR14	CN14	C14	CW14◊*	CX14◊	CXW14◊	CR24	CN24	C24	CW24◊*
4'-4 13/16"	4'-5 3/8"	48"	CR145	CN145	C145	CW145◊*	CX145◊	CXW145◊	CR245	CN245	C245	CW245◊*
4'-11 7/8"	5'-0 3/8"	55 1/16"	CR15	CN15	C15	CW15◊*	CX15◊	CXW15◊**	CR25	CN25	C25	CW25◊*
5'-4 13/16"	5'-5 3/8"	60"	CR155	CN155	C155	CW155◊*	CX155◊	CXW155◊**	CR255	CN255	C255	CW255◊*
5'-11 7/8"	6'-0 3/8"	67 1/16"	CR16	CN16	C16	CW16◊*	CX16◊	CXW16◊**	CR26	CN26	C26	CW26◊*

• "Window Dimension" always refers to outside frame to frame dimension.

• "Minimum Rough Opening" dimensions may need to be increased to allow for use of building wraps, flashing, sill panning, brackets, fasteners or other items. See page 33 for more details.

◊ Meet or exceed clear opening area of 5.7 sq. ft., clear opening width of 20" and clear opening height of 24" with appropriate hardware, straight or split arm operator, specified. See tables on pages 46-48.

* Meet clear opening width of 20" using sill hinge control bracket with split arm operator specified (bracket can be pivoted for cleaning position) and meet clear opening width of 22" with straight arm operator specified.

** Available with straight arm operators only.

RECEIVED
OCT 19 2012
1207 ARB-MPR
CITY OF DUBLIN
PLANNING

CASEMENT & AWNING WINDOWS

Alignment Grid for Standard Sizes of Casement, Awning, Picture and Transom Windows

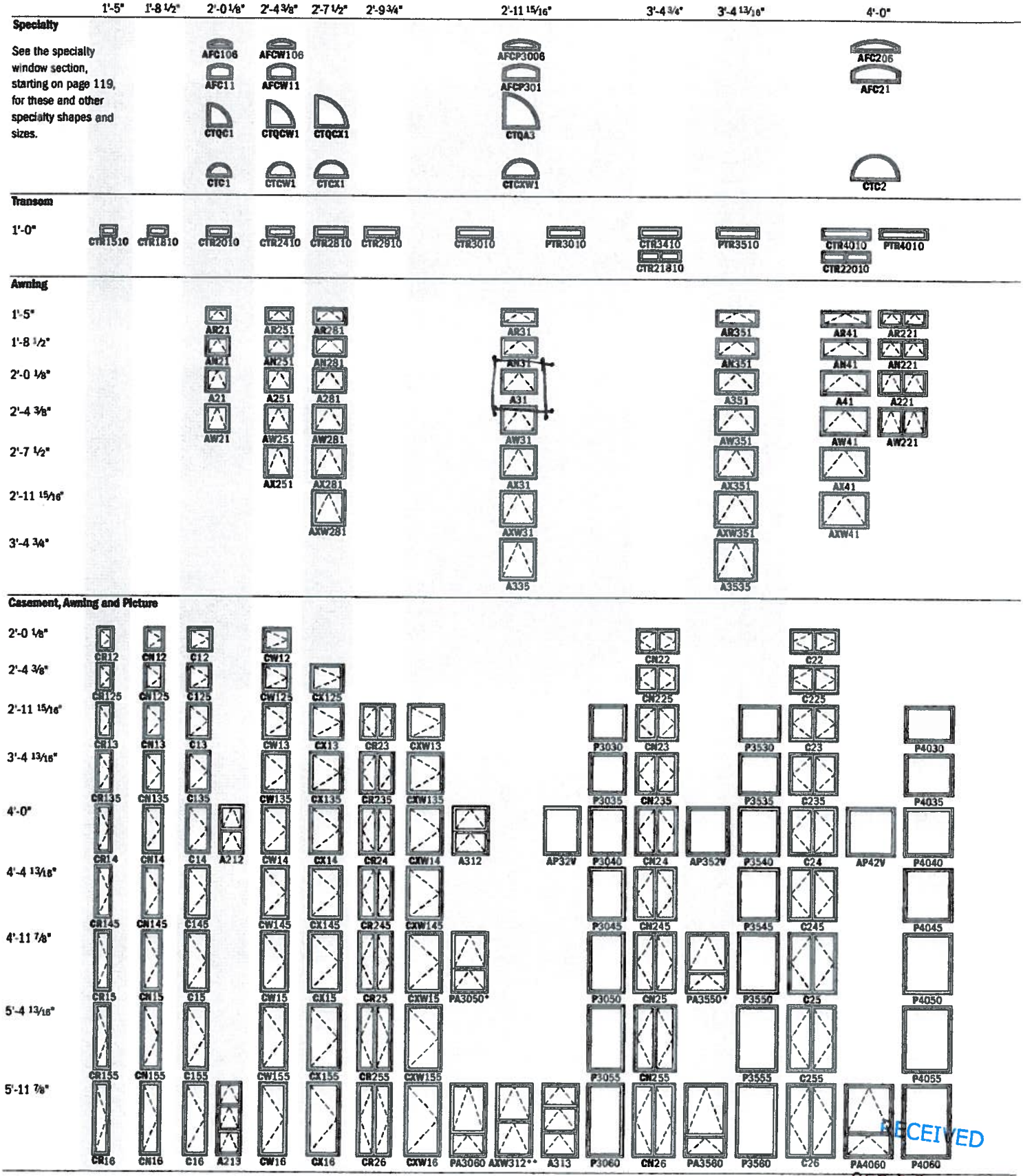

*Actual height of 4'-11 13/16".
**Actual height of 5'-11 5/8".

RECEIVED
OCT 19 2012
12-077ARBMPR
CITY OF DUBLIN
PLANNING

Casement Window Details
Scale 1 1/2" = 1'-0" (1:8)

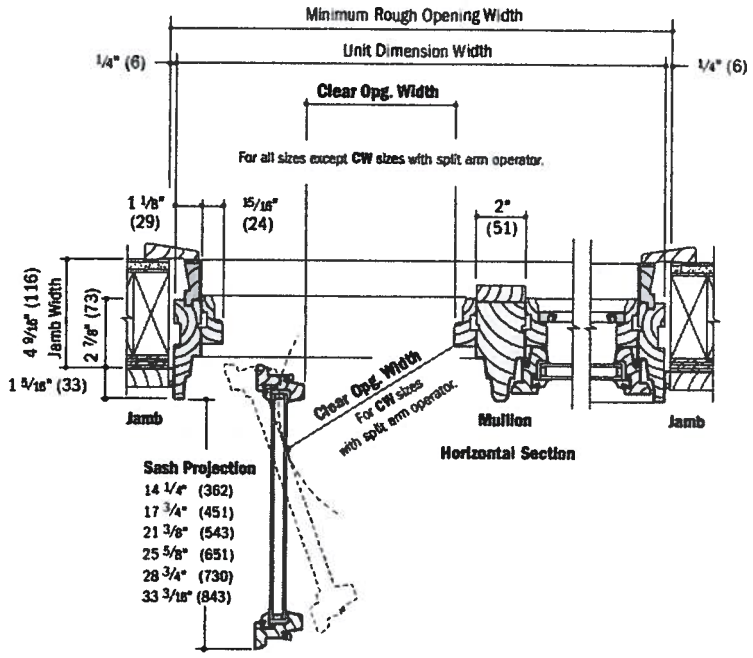

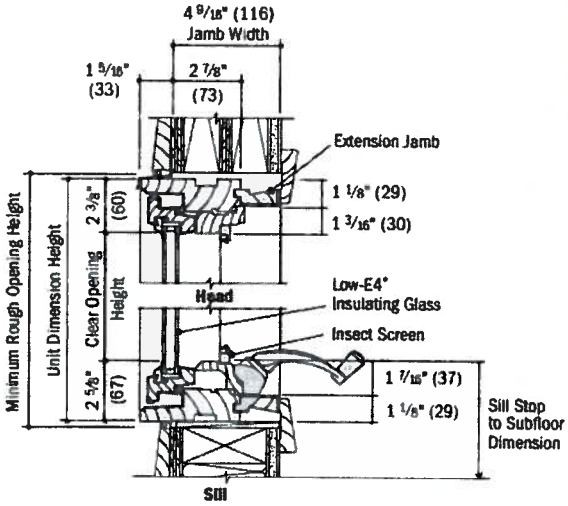

Awning Window Details
Scale 1 1/2" = 1'-0" (1:8)

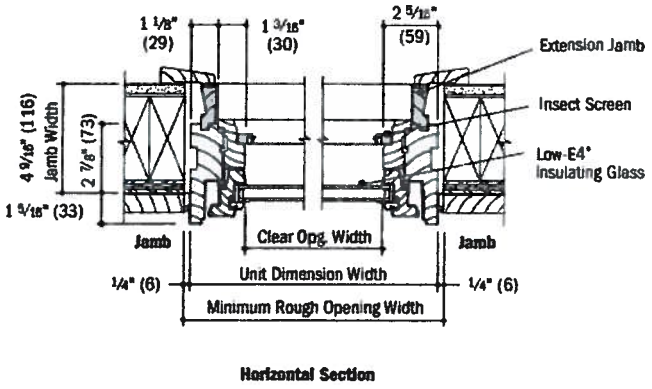

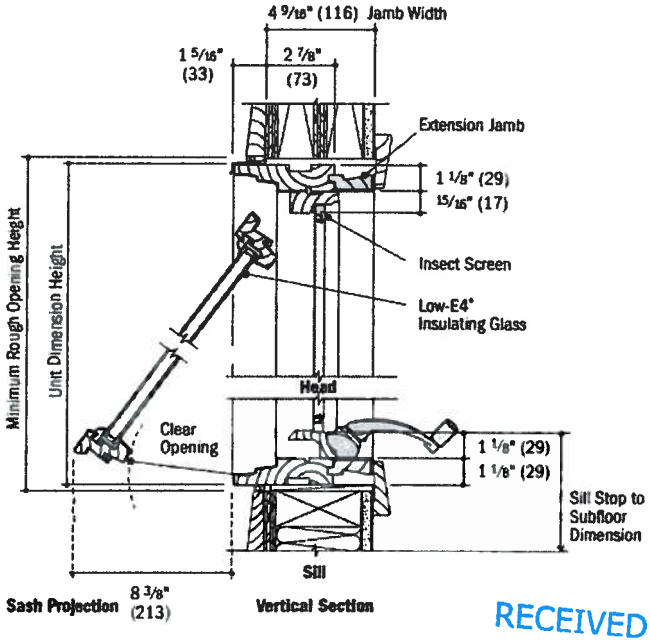

RECEIVED
OCT 19 2012
12-077ARB-MPR
CITY OF DUBLIN
PLANNING

- 4 9/16" jamb width measurement is from backside of installation flange.
- Light-colored areas are parts included with window. Dark-colored areas are additional Andersen® parts required to complete window assembly as shown.
- **Rough openings may need to be increased to allow for use of building wraps, flashing, sill pan**ning, brackets, fasteners or other items. See installation information on page 33.
- Details are for illustration only and are not intended to represent product installation methods or materials. Refer to product installation guides at andersenwindows.com.

Picture and Transom Window Details
Scale 1 1/2" = 1'-0" (1:8)

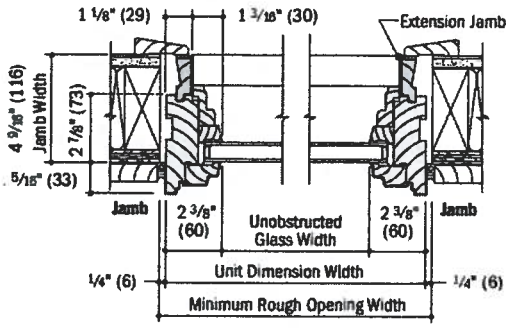

Horizontal Section

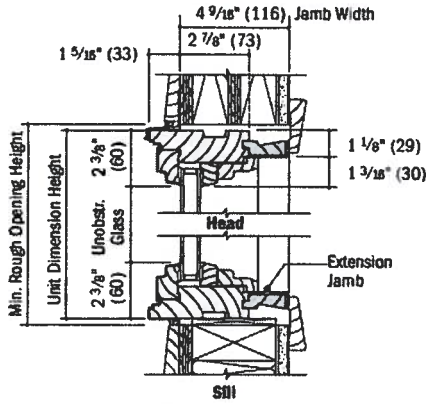

Vertical Section

Horizontal (stack) Non-Reinforced Joining Detail
Scale 1 1/2" = 1'-0" (1:8)

Overall Window Dimension Height

Sum of individual window heights plus 1/8" for each join.

Overall Rough Opening Height

Overall window dimension height plus 1/2".

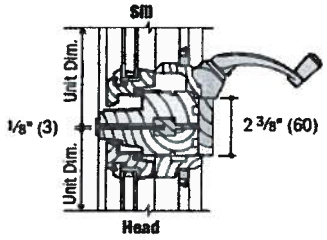

Vertical Section
Casement over Awning

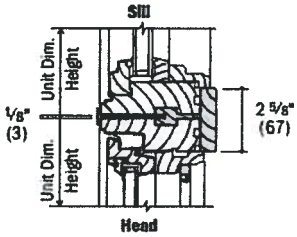

Vertical Section
Picture over Casement

Separate Rough Openings Detail
Scale 1 1/2" = 1'-0" (1:8)

To meet structural requirements or to achieve a wider joined appearance, windows may be installed into separate rough openings having vertical support (by others) in combination with Andersen® exterior filler and exterior vinyl trim.

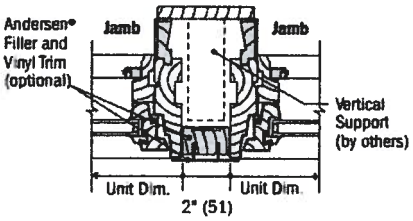

Horizontal Section
Casement and Casement

Vertical (ribbon) Non-Reinforced Joining Detail
Scale 1 1/2" = 1'-0" (1:8)

Overall Window Dimension Width

Sum of individual window widths plus 1/8" for each join.

Overall Rough Opening Width

Overall window dimension width plus 1/2".

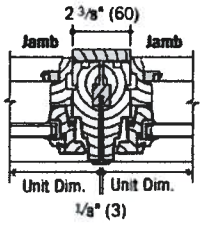

Horizontal Section
Casement to Casement

For more joining information see the combination design section starting on page 259.

RECEIVED
OCT 19 2012
12-072ARB-MPR
CITY OF DUBLIN
PLANNING

- 4 9/16" jamb width measurement is from backside of installation flange.
- Light-colored areas are parts included with window. Dark-colored areas are additional Andersen® parts required to complete window assembly as shown.
- **Rough openings may need to be increased to allow for use of building wraps, flashing, sill panning, brackets, fasteners or other items. See installation information on page 33.**
- Details are for illustration only and are not intended to represent product installation methods or materials. Refer to product installation guides at andersenwindows.com.
- Consult with an architect or structural engineer regarding minimum requirements for structural support members between adjacent rough openings.

Features

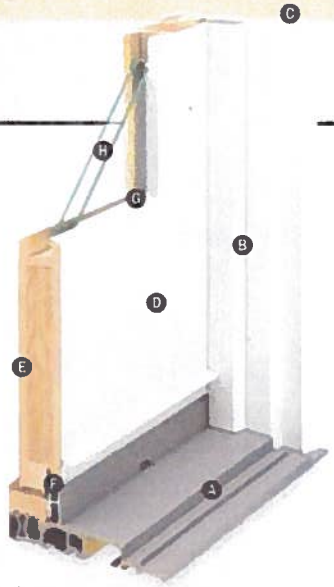

FRAME

Ⓐ The sill of the Frenchwood® hinged patio door is made with three-piece construction. The subsill is made of patented Fibrex® material, and the sill step is solid oak. The exterior sill member is made of extruded aluminum with an attractive wear-resistant, heat-baked finish in a neutral color. This combination of materials combines durability and low maintenance with excellent insulating characteristics.

Ⓑ All basic exterior frame members are made of a fiberglass reinforced composite, which maintains an attractive appearance while minimizing maintenance.

Ⓒ The exterior frame members are attached to a water-repellent preservative-treated wood subframe for long-lasting* protection and performance. The subframe is grooved to accept extension jambs.

PANEL

Ⓓ The exterior of the wood door panel is protected with a long-lasting* urethane base finish in White, Sandtone, Terratone® or Forest Green color.

Ⓔ Panel interior surfaces are unfinished pine. Unfinished oak and maple veneers are available as options. Low-maintenance prefinished white interiors are also available.

Hinged inswing operating panels are either left- or right-hand active.

Ⓕ A factory-applied, one-piece compression-type rubber weatherstrip continues in one plane around the panel to provide maximum effectiveness against water and air infiltration. The corners of the weatherstrip are welded to eliminate gaps between the panel and the frame/sill shoulder.

Mortise-and-Tenon Joints

Mortise-and-tenon joints prevent panel sag and maintain smooth operation.

Adjustable Hinges

Adjustable hinges have ball bearing pivots for smooth, frictionless movement. Features easy horizontal and vertical adjustment, plus quick release feature for easy panel removal. Available factory-applied in finishes that coordinate with door hardware. For units with a white prefinished interior, white finish hinges are standard. Hardware is sold separately.

Standard Gold Dust finish shown.

GLASS

Ⓖ Panels are silicone bed glazed and finished with an interior wood stop.

Ⓗ High-Performance™ glass options include:

- Low-E4® tempered glass
- Low-E4® SmartSun™ tempered glass
- Low-E4® Sun tempered glass

Additional glass options are available. Contact your Andersen supplier. (Glass option must be specified.)

PATTERNED GLASS

Patterned glass options are available. See page 12 for more details.

LOCKING SYSTEM

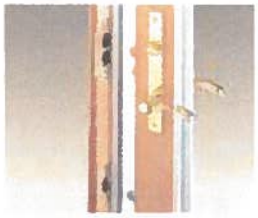

Multi-Point Locking System

The Frenchwood hinged patio door has a multi-point locking system with two hook bolts above and below the center dead bolt. This system provides added weathertightness and enhanced security.

WINDOWS AND DOORS WITH StormWATCH PROTECTION

Frenchwood hinged patio doors are available with Stormwatch® protection. For a copy of the *Andersen® Coastal Product Guide*, contact your Andersen supplier.

* For complete information on our limited warranties, visit andersenwindows.com or contact your Andersen supplier.

NOTE: Andersen® patio doors are not intended for use as entrance doors.

Exterior

Specify a unit exterior and interior finish/veneer option to complete your order.

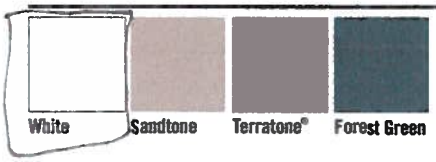

White | Sandtone | Terratone® | Forest Green

Interior

white | pine | oak | maple

Naturally occurring variations in grain, color and texture make each wood door panel one-of-a-kind.

Prefinished white interiors are only available on units with white exteriors.

For more information about **glass, patterned glass, art glass, grilles and installation accessories,** see pages 12–32 or visit andersenwindows.com

RECEIVED
OCT 19 2012
CITY OF DUBLIN
PLANNING

Hardware

Sold Separately.

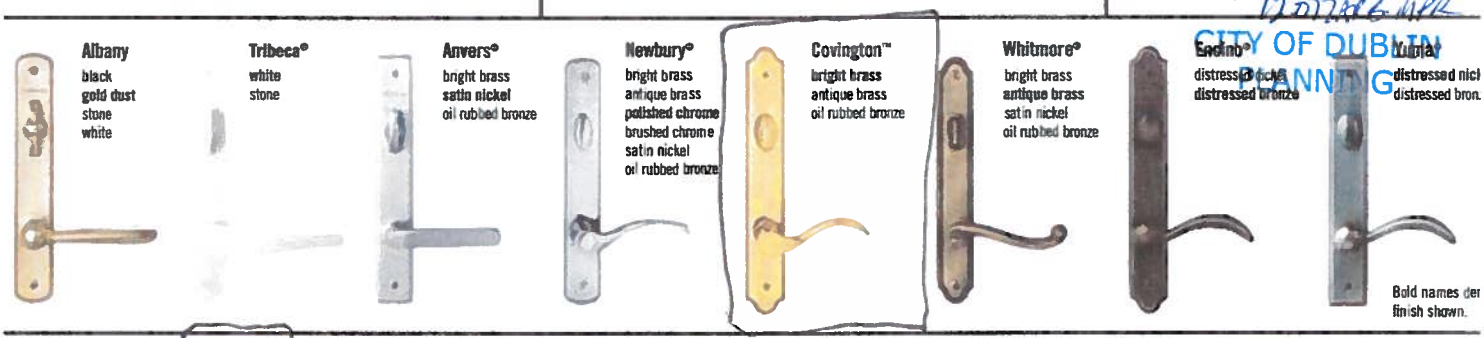

Albany
black
gold dust
stone
white

Tribeca®
white
stone

Anvers®
bright brass
satin nickel
oil rubbed bronze

Newbury®
bright brass
antique brass
polished chrome
brushed chrome
satin nickel
oil rubbed bronze

Covington™
bright brass
antique brass
oil rubbed bronze

Whitmore®
bright brass
antique brass
satin nickel
oil rubbed bronze

Eaglino®
distressed nickel
distressed bronze

Yuma®
distressed nickel
distressed bronze

Bold names denote finish shown.

Hardware Finishes

bright brass | antique brass | polished chrome | brushed chrome | satin nickel | oil rubbed bronze | distressed nickel | distressed bronze | white | stone | gold dust | black

Printing limitations prevent exact finish replication. See your Andersen supplier for actual finish samples. Tribeca and Albany hardware are zinc diecast with powder-coated durable finish. Other hardware is solid forged brass. Mix-and-match interior and exterior style and finish options are available. Bright brass and satin nickel finishes feature a 10-year limited warranty.

FRENCHWOOD® HINGED PATIO DOORS — INSWING

Table of Frenchwood® Hinged Inswing Patio Door Sizes

Scale 1/8" = 1'-0" (1:96)

Door Dimension	2'-0 1/2"	4'-0"	4'-0"	
Minimum Rough Opening	2'-1"	4'-1"	4'-1"	
Unobstructed Glass (single panel only)	13 1/4"	13 1/4"	13 1/4"	
3 heights				
1	FWH2168S	FWH4168APLR	FWH4168PALR	
2	FWH21611S	FWH41611APLR	FWH41611PALR	
3	FWH2180S	FWH4180APLR	FWH4180PALR	

Custom-size doors are available in 1/8" increments between the smallest and largest standard door sizes. Some restrictions apply. Contact your Andersen supplier for availability.

Door Dimension	2'-6 1/8"	2'-6 1/8"	2'-6 1/8"	4'-11 1/4"	4'-11 1/4"	4'-11 1/4"	4'-11 1/4"	4'-11 1/4"
Minimum Rough Opening	2'-7"	2'-7"	2'-7"	5'-0"	5'-0"	5'-0"	5'-0"	5'-0"
Unobstructed Glass (single panel only)	18 7/8"	18 7/8"	18 7/8"	18 7/8"	18 7/8"	18 7/8"	18 7/8"	18 7/8"
3 heights								
1	FWH2768S	FWH2768AR	FWH2768AL	FWH5068SS	FWH5068ASR	FWH5068SAL	FWH5068APLR	FWH5068PALR
2	FWH27611S	FWH27611AR	FWH27611AL	FWH50611SS	FWH50611ASR	FWH50611SAL	FWH50611APLR	FWH50611PALR
3	FWH2780S	FWH2780AR	FWH2780AL	FWH5080SS	FWH5080ASR	FWH5080SAL	FWH5080APLR	FWH5080PALR

Stationary (S) doors can be used as an individual unit or as a sidelight.

Divided light patterns shown on page 159.

Door Dimension	2'-8 1/8"	2'-8 1/8"	2'-8 1/8"	5'-3 1/4"	5'-3 1/4"	5'-3 1/4"	5'-3 1/4"	5'-3 1/4"
Minimum Rough Opening	2'-9"	2'-9"	2'-9"	5'-4"	5'-4"	5'-4"	5'-4"	5'-4"
Unobstructed Glass (single panel only)	20 7/8"	20 7/8"	20 7/8"	20 7/8"	20 7/8"	20 7/8"	20 7/8"	20 7/8"
3 heights								
1	FWH2968S	FWH2968AR	FWH2968AL	FWH5468SS	FWH5468ASR	FWH5468SAL	FWH5468APLR	FWH5468PALR
2	FWH29611S	FWH29611AR	FWH29611AL	FWH54611SS	FWH54611ASR	FWH54611SAL	FWH54611APLR	FWH54611PALR
3	FWH2980S	FWH2980AR	FWH2980AL	FWH5480SS	FWH5480ASR	FWH5480SAL	FWH5480APLR	FWH5480PALR

Door Dimension	3'-0 1/8"	3'-0 1/8"	3'-0 1/8"	5'-11 1/4"	5'-11 1/4"	5'-11 1/4"	5'-11 1/4"	5'-11 1/4"
Minimum Rough Opening	3'-1"	3'-1"	3'-1"	6'-0"	6'-0"	6'-0"	6'-0"	6'-0"
Unobstructed Glass (single panel only)	24 7/8"	24 7/8"	24 7/8"	24 7/8"	24 7/8"	24 7/8"	24 7/8"	24 7/8"
3 heights								
1	FWH3168S	FWH3168AR	FWH3168AL	FWH6068SS	FWH6068ASR	FWH6068SAL	FWH6068APLR	FWH6068PALR
2	FWH31611S	FWH31611AR	FWH31611AL	FWH60611SS	FWH60611ASR	FWH60611SAL	FWH60611APLR	FWH60611PALR
3	FWH3180S	FWH3180AR	FWH3180AL	FWH6080SS	FWH6080ASR	FWH6080SAL	FWH6080APLR	FWH6080PALR

- "Door Dimension" always refers to outside frame to frame dimension.
- "Minimum Rough Opening" dimensions may need to be increased to allow for use of building wraps, flashing, sill panning, brackets, fasteners or other items. See installation information on page 33.

RECEIVED
OCT 19 2012
12077ARB MPR
CITY OF DUBLIN
PLANNING

Frenchwood® Hinged Inswing Patio Door Details

Scale 1½" = 1'-0" (1:8)

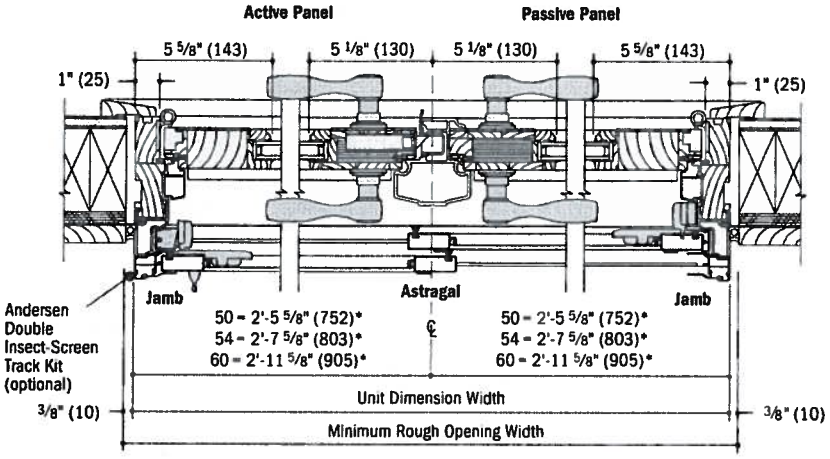

Horizontal Section
2-Panel

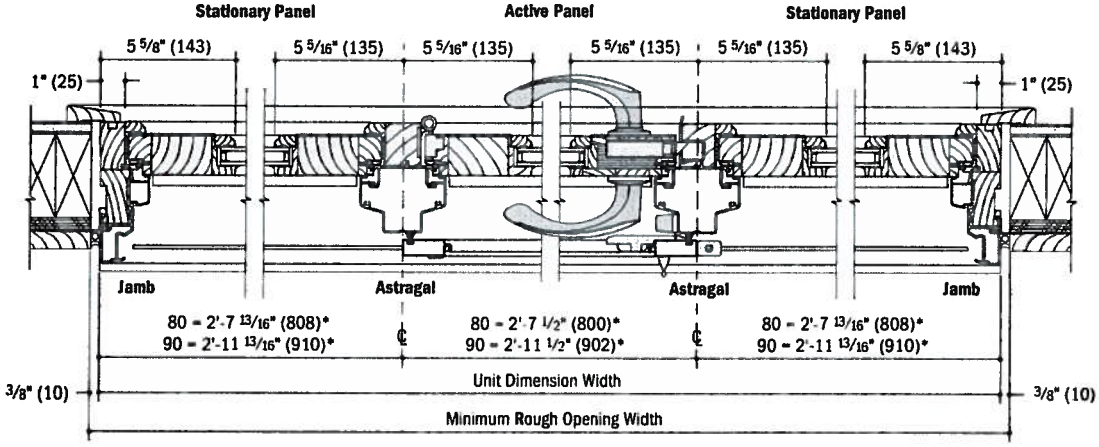

Horizontal Section
3-Panel

Ramped Sill Detail

Scale 1½" = 1'-0" (1:8)

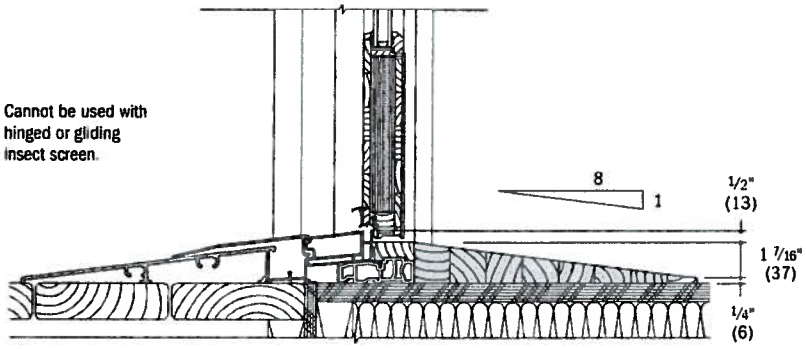

Vertical Section

*Dimension indicates location of astragal centerline.

- Light-colored areas are parts included with door. Dark-colored areas are additional Andersen® parts required to complete door assembly as shown.
- **Rough openings may need to be increased to allow for use of building wraps, flashing, sill panning, brackets, fasteners or other items. See installation information on page 33.**
- Details are for illustration only and are not intended to represent product installation methods or materials. Refer to product installation guides at andersenwindows.com.

RECEIVED
OCT 19 2012
12 077ARB-MPR
CITY OF DUBLIN
PLANNING

Divided Light Patterns

	Prairie A	Colonial	Modified Colonial	Modified Colonial SCR (Simulated Check Rail)	Tall Fractional	Tall Fractional SCR (Simulated Check Rail)	Short Fractional	Short Fractional SCR (Simulated Check Rail)
Frenchwood® Hinged Inswing Patio Doors	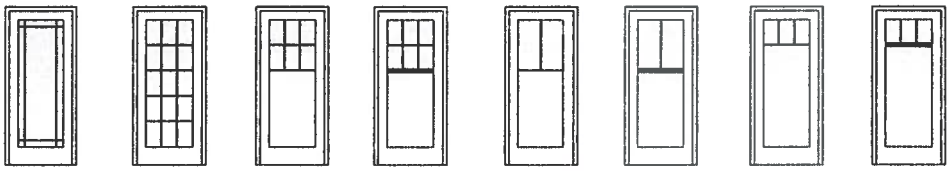							

Number of lights and overall pattern varies with panel size. Patterns are not available in all configurations.

Specified equal light and custom patterns are also available. For more information on divided light see page 13 or visit andersenwindows.com/grilles.

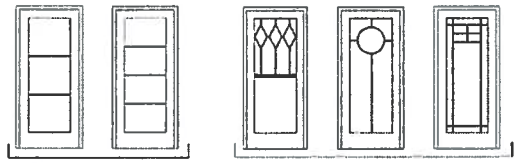

Specified Equal Light Examples

Custom Pattern Examples

Frenchwood® Hinged Inswing Patio Door Details

Scale 1½" = 1'-0" (1:8)

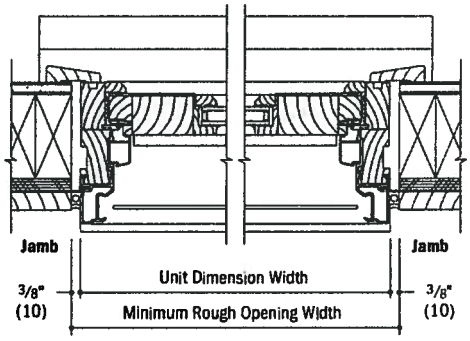

Horizontal Section
Stationary

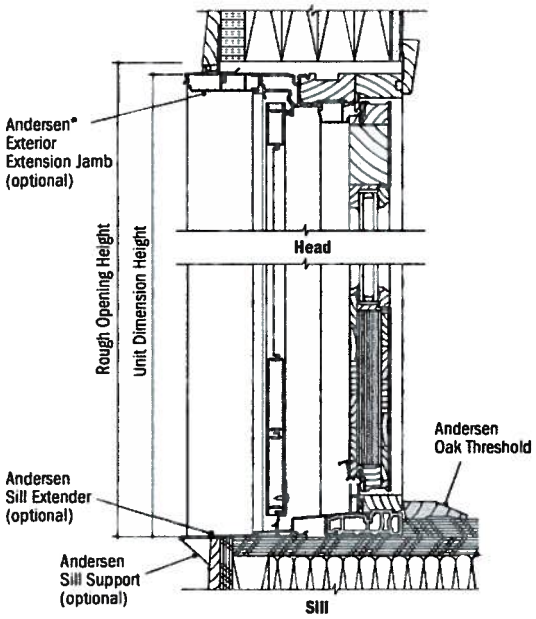

Vertical Section

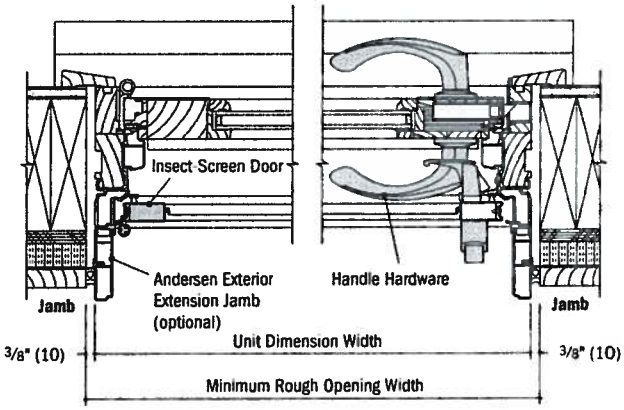

Horizontal Section
Active

RECEIVED
OCT 19 2012
12-077ARB-MPR
CITY OF DUBLIN
PLANNING

- Light-colored areas are parts included with door. Dark-colored areas are additional Andersen® parts required to complete door assembly as shown.
- **Rough openings may need to be increased to allow for use of building wraps, flashing, sill panning, brackets, fasteners or other items. See installation information on page 33.**
- Details are for illustration only and are not intended to represent product installation methods or materials. Refer to product installation guides at andersenwindows.com.

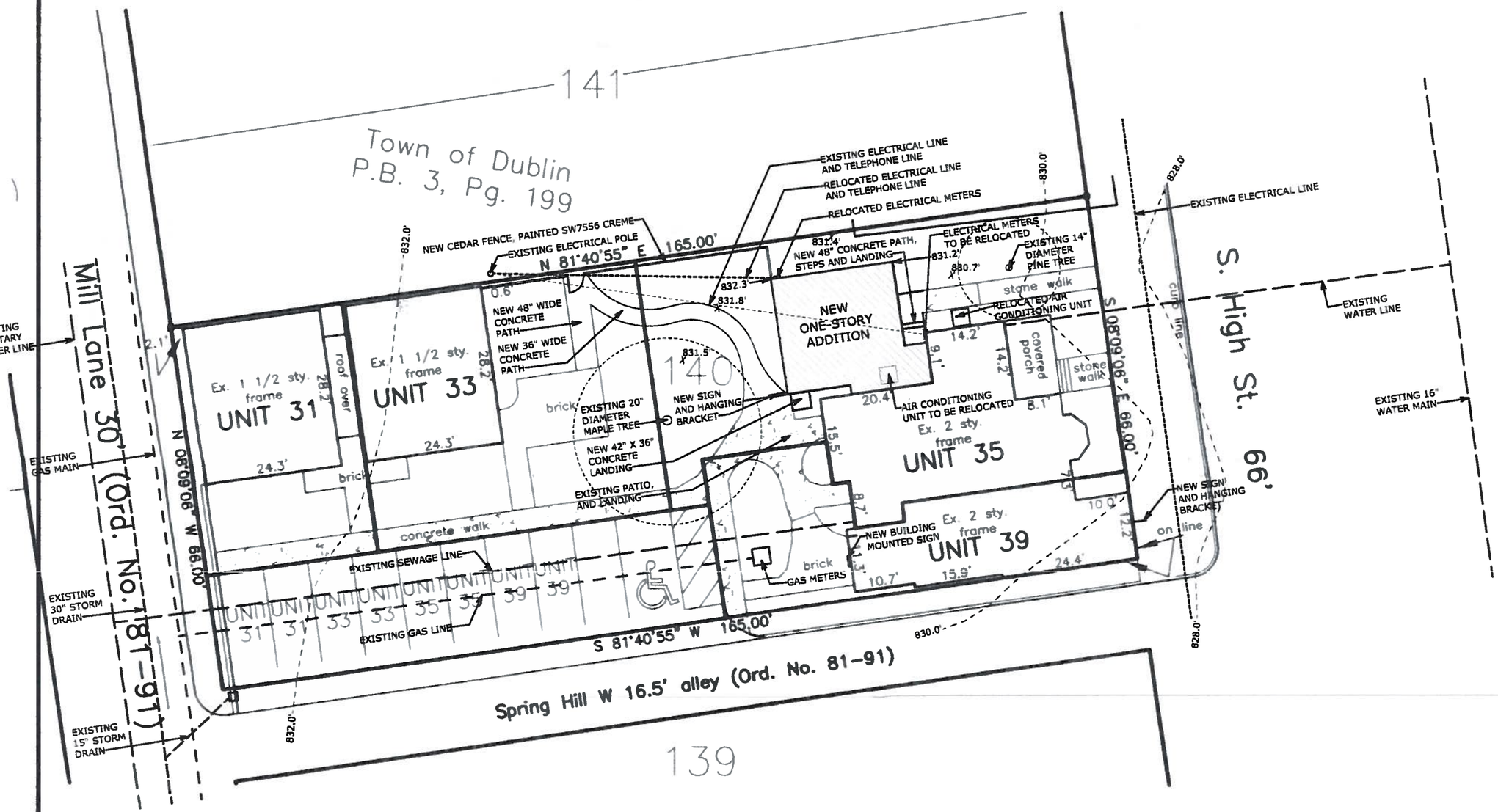

LOT SIZE - 5,346 SQUARE FEET
EXISTING BUILDING - 2,386 SQUARE FEET
NEW ADDITION - 500.6 SQUARE FEET
IMPERVIOUS COVERAGE, MAXIMUM - 4,009.5
TOTAL IMPERVIOUS COVERAGE - 3,266

NORTH

PROPOSED SITE PLAN

SCALE: 1" = 20'-0"

RECEIVED
OCT 19 2012
B-07ARB-IMPR
CITY OF DUBLIN
PLANNING

090512	PRELIMINARY
000000	BIDDING
000000	CONSTRUCTION
000000	REVISIONS

Tom Bassett
35 + 39 S. High St.
Dublin, Ohio 43017

BOLYARD ARCHITECTURE + DESIGN STUDIO

60 Franklin Street
Dublin, Ohio 43017
614.774.2490 Phone
614.633.1053 Fax
www.bolyardstudio.com

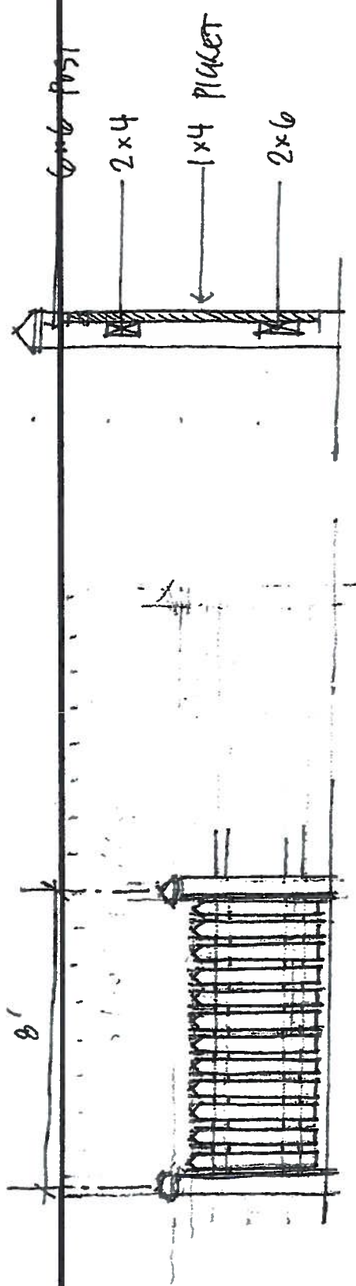

FENCE TO BE CEDAR AND
PAINTED SW7556, CREME

1/2" = 1'-0"

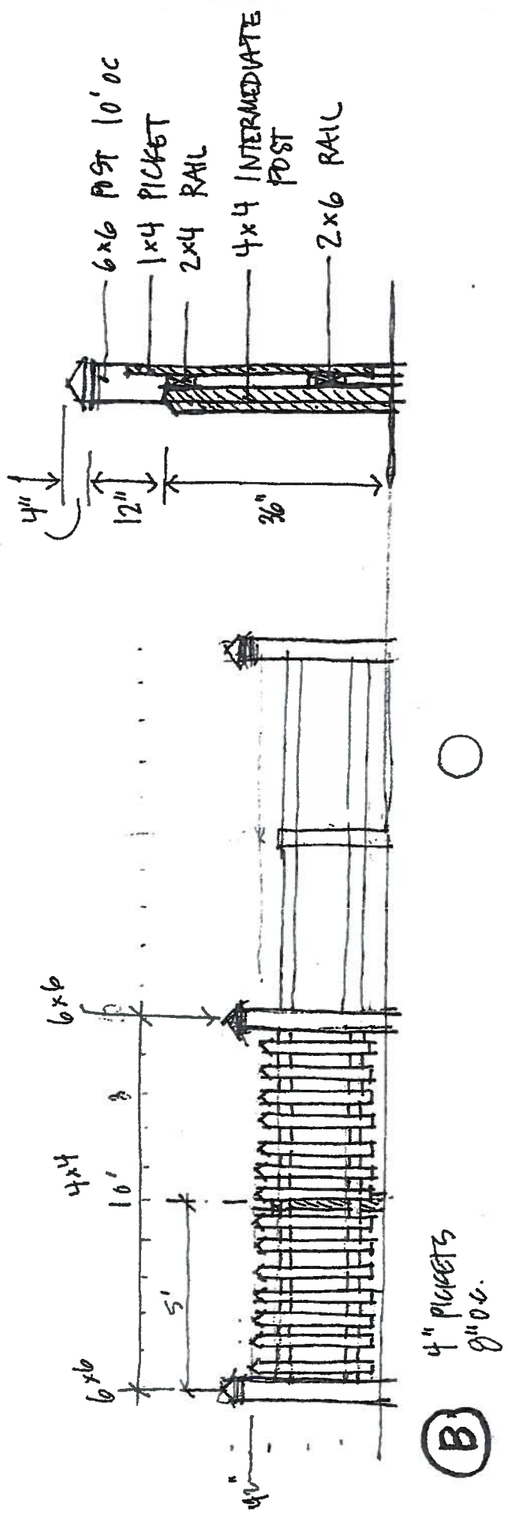

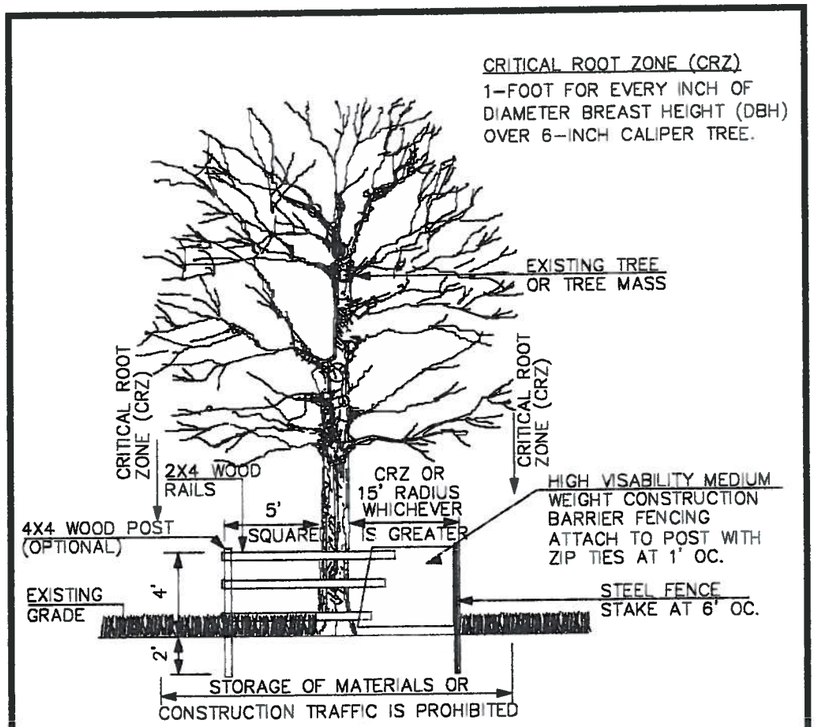

NOTES:
1. INSPECTION OF INSTALLATION IS REQUIRED. CALL (614) 410-4600.
2. THE CITY IS TO BE CONTACTED IF FENCE LOCATION NEEDS TO BE ADJUSTED OR PRIOR TO ANY ENCROACHMENT OF PRESERVATION AREA.

TREE PROTECTION FENCE DETAIL

090512	PRELIMINARY
000000	BIDDING
000000	CONSTRUCTION
000000	REVISIONS

Tom Bassett
35 + 39 S. High St.
Dublin, Ohio 43017

BOLYARD ARCHITECTURE + DESIGN STUDIO
60 Franklin Street
Dublin, Ohio 43017
614.774.2490 Phone
614.633.1053 Fax
www.bolyardstudio.com

RECEIVED
OCT 19 2012
12-077ARB-MPR
CITY OF DUBLIN
PLANNING

Dublin
Pg. 199

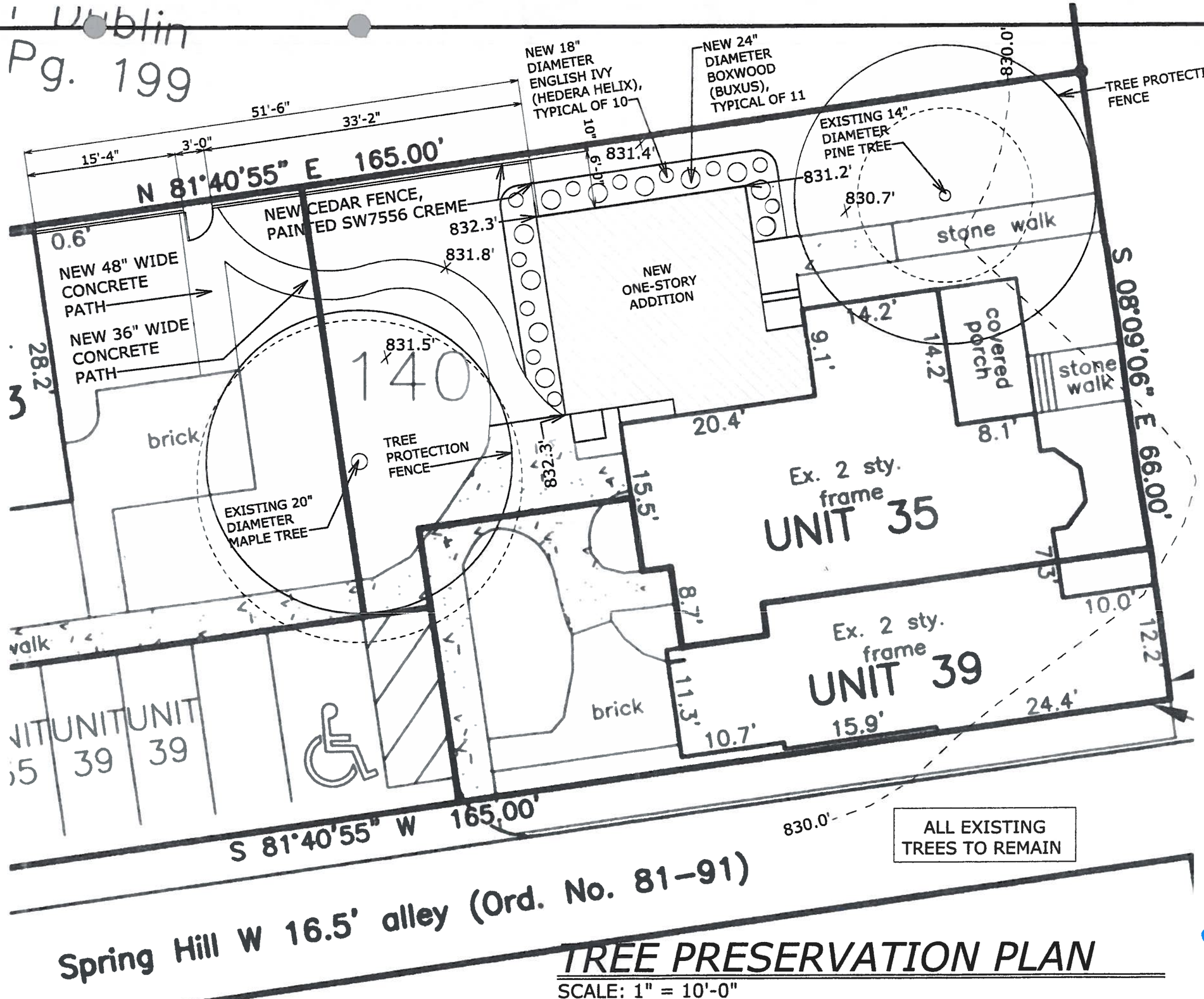

TREE PRESERVATION PLAN

SCALE: 1" = 10'-0"

090512	PRELIMINARY
000000	BIDDING
000000	CONSTRUCTION
000000	REVISIONS

Tom Bassett
35 + 39 S. High St.
Dublin, Ohio 43017

BOLYARD ARCHITECTURE + DESIGN STUDIO
60 Franklin Street
Dublin, Ohio 43017
614.774.2490 Phone
614.633.1053 Fax
www.bolyardstudio.com

RECEIVED
OCT 19 2012
12-077ARB-MPR
CITY OF DUBLIN
PLANNING

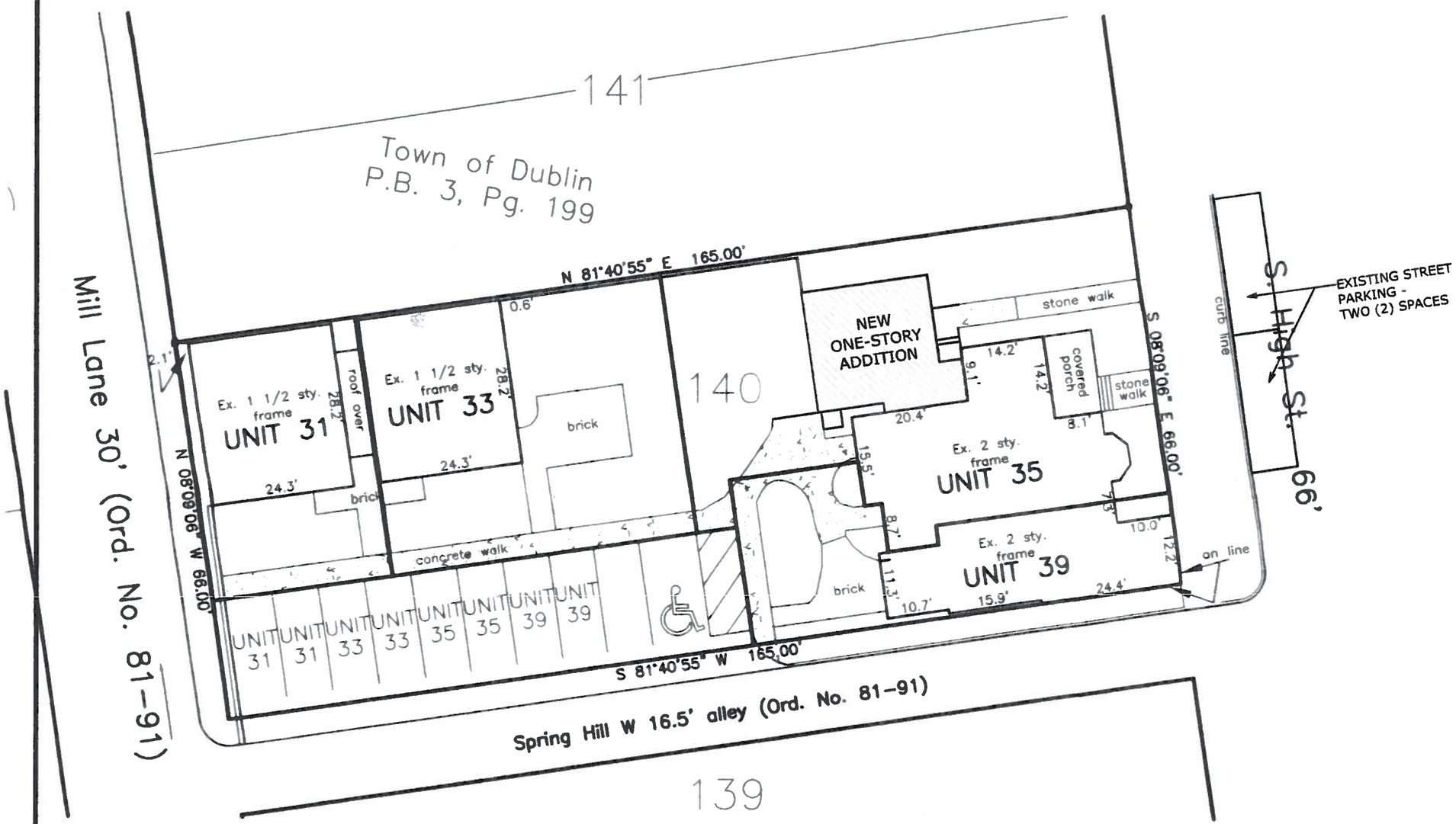

NORTH

PARKING PLAN

SCALE: 1" = 20'-0"

NEW ADDITION - 500.6 SQUARE FEET
PARKING REQUIREMENT 2 SPACES PER 1000 SQUARE FEET
REQUIRED PARKING FOR NEW ADDITION 1.5 SPACES

RECEIVED
OCT 19 2012
12-077ARB-MPR
CITY OF DUBLIN
PLANNING

090512	PRELIMINARY
000000	BIDDING
000000	CONSTRUCTION
000000	REVISIONS

Tom Bassett
35 + 39 S. High St.
Dublin, Ohio 43017

BOLYARD ARCHITECTURE + DESIGN STUDIO

60 Franklin Street
Dublin, Ohio 43017
614.774.2490 Phone
614.633.1053 Fax
www.bolyardstudio.com

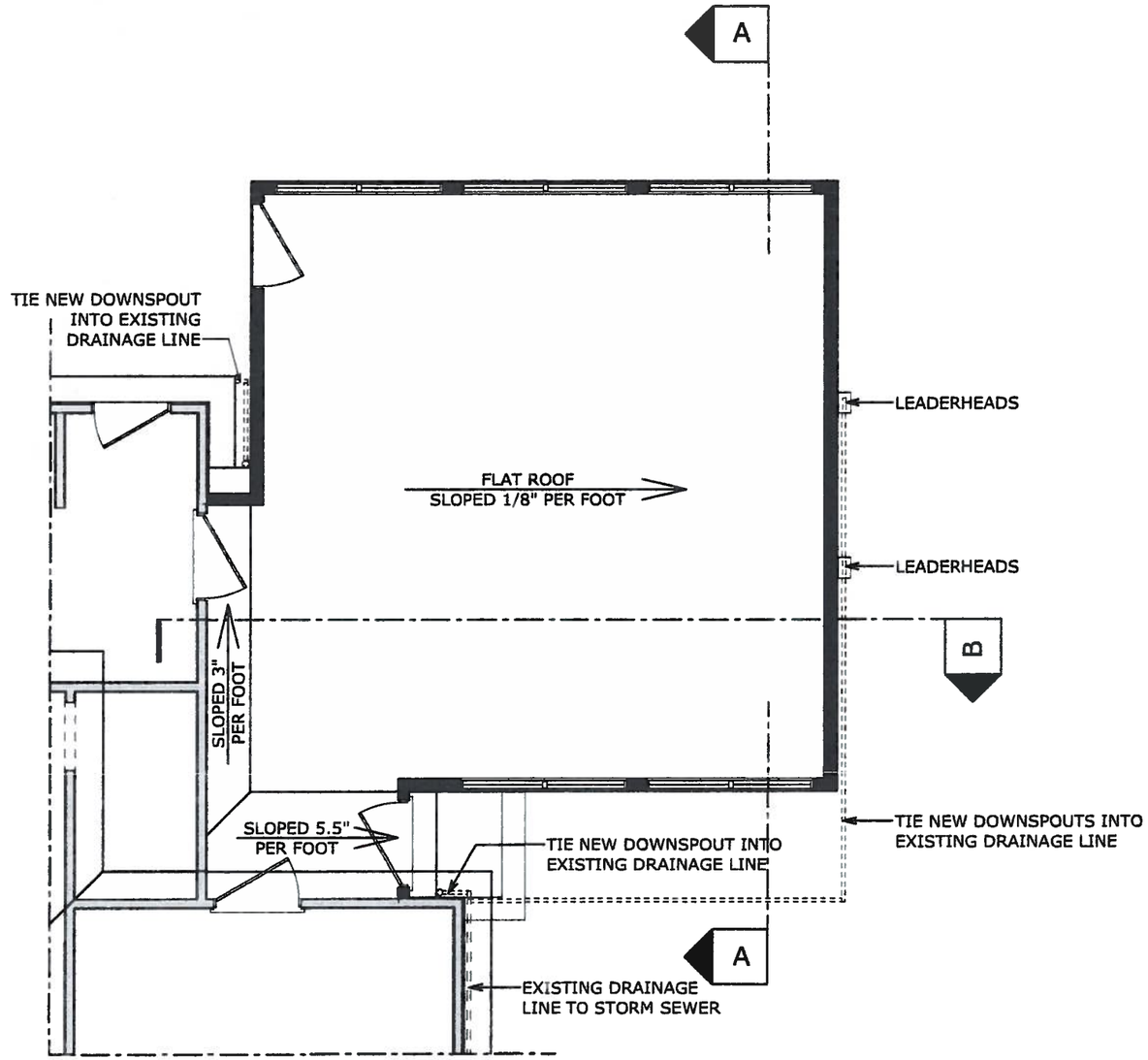

ROOF FRAMING PLAN

SCALE: 3/16" = 1'-0"

RECEIVED
OCT 19 2012
12-077ARB MPR
CITY OF DUBLIN
PLANNING

090512	PRELIMINARY
000000	BIDDING
000000	CONSTRUCTION
000000	REVISIONS

Tom Bassett
35 + 39 S. High St.
Dublin, Ohio 43017

BOLYARD ARCHITECTURE + DESIGN STUDIO
60 Franklin Street
Dublin, Ohio 43017
614.774.2490 Phone
614.633.1053 Fax
www.bolyardstudio.com

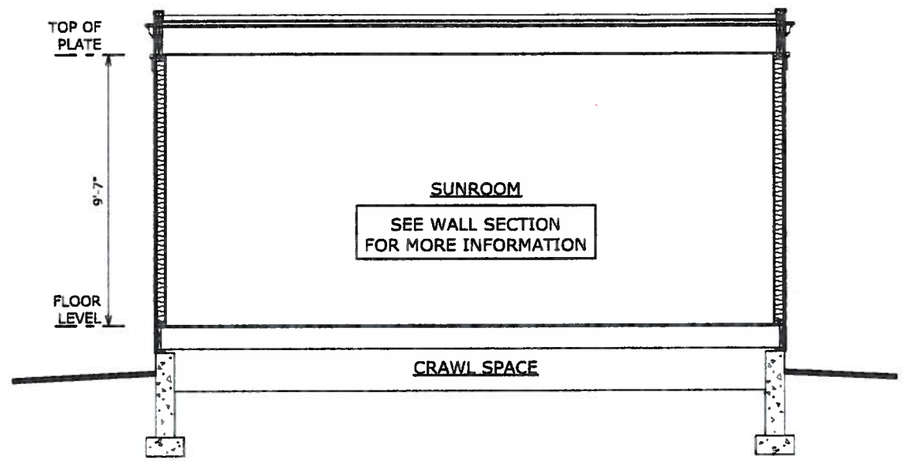

SECTION "A"

SCALE: 3/16" = 1'-0"

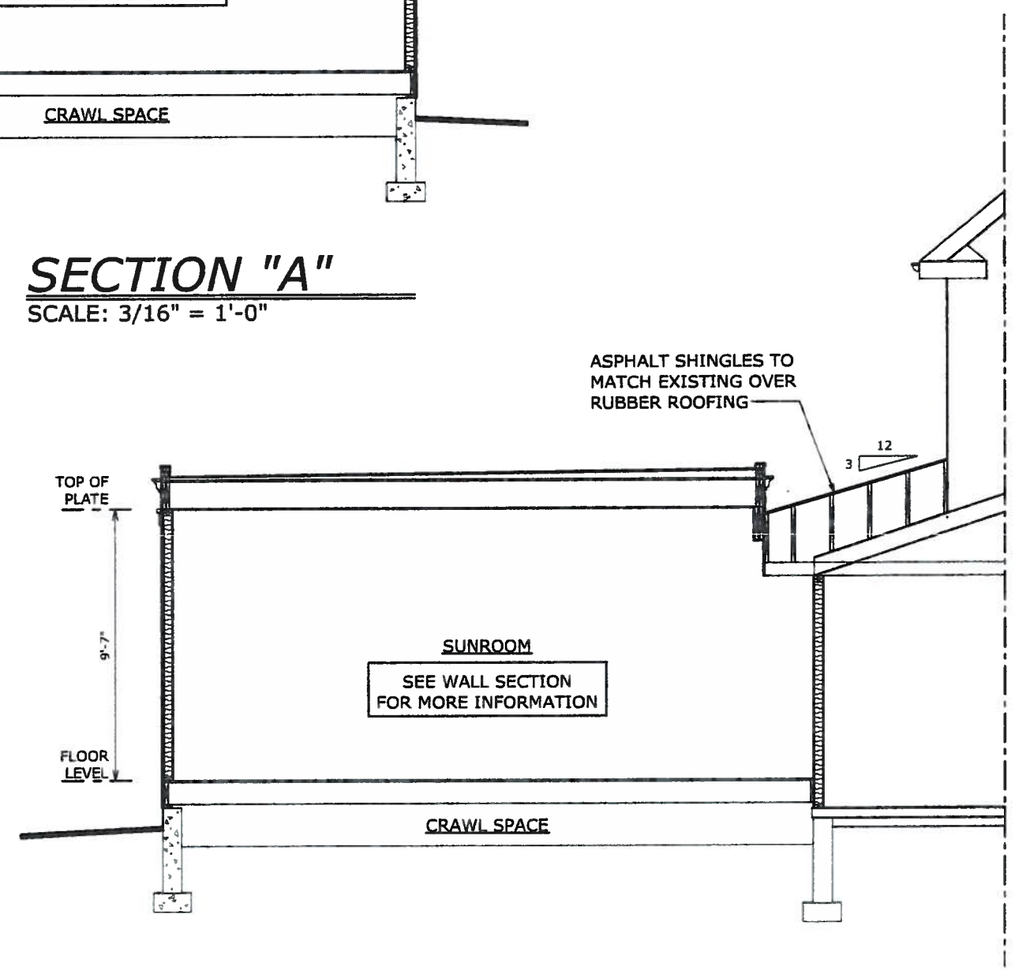

SECTION "B"

SCALE: 3/16" = 1'-0"

RECEIVED
OCT 19 2012
12-077ARBMPR
CITY OF DUBLIN
PLANNING

090512	PRELIMINARY
000000	BIDDING
000000	CONSTRUCTION
000000	REVISIONS

Tom Bassett
35 + 39 S. High St.
Dublin, Ohio 43017

BOLYARD ARCHITECTURE + DESIGN STUDIO
60 Franklin Street
Dublin, Ohio 43017
614.774.2490 Phone
614.633.1053 Fax
www.bolyardstudio.com

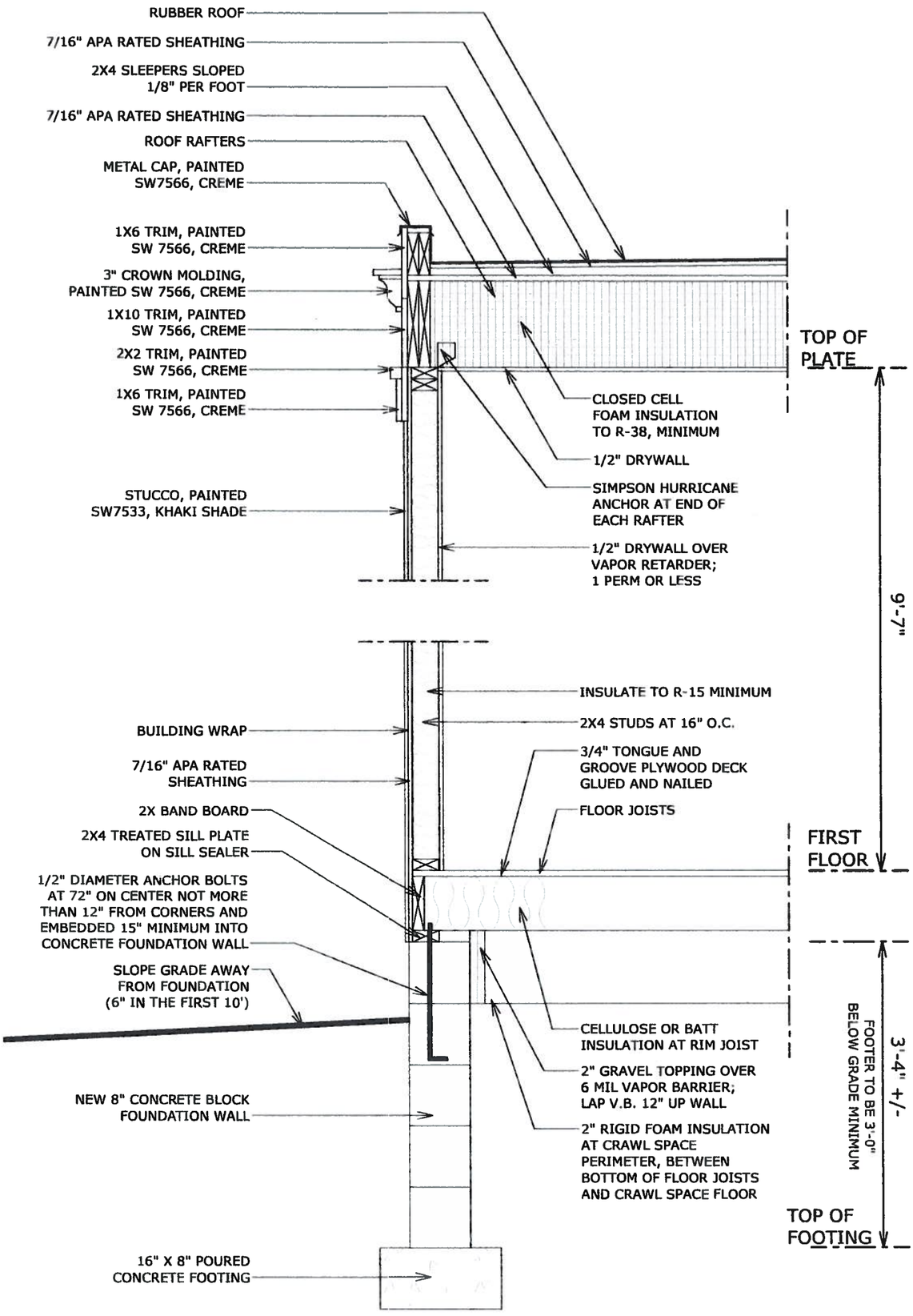

TYPICAL WALL SECTION

SCALE: 3/4" = 1'-0"

RECEIVED
OCT 19 2012
12-077 ARB-MPR
CITY OF DUBLIN
PLANNING

60 Franklin Street
Dublin, Ohio 43017
614.774.2490 Phone
614.633.1053 Fax
www.bolyardstudio.com

BOLYARD ARCHITECTURE + DESIGN STUDIO

Tom Bassett
35 + 39 S. High St.
Dublin, Ohio 43017

090512	■	PRELIMINARY
000000		BIDDING
000000		CONSTRUCTION
000000		REVISIONS

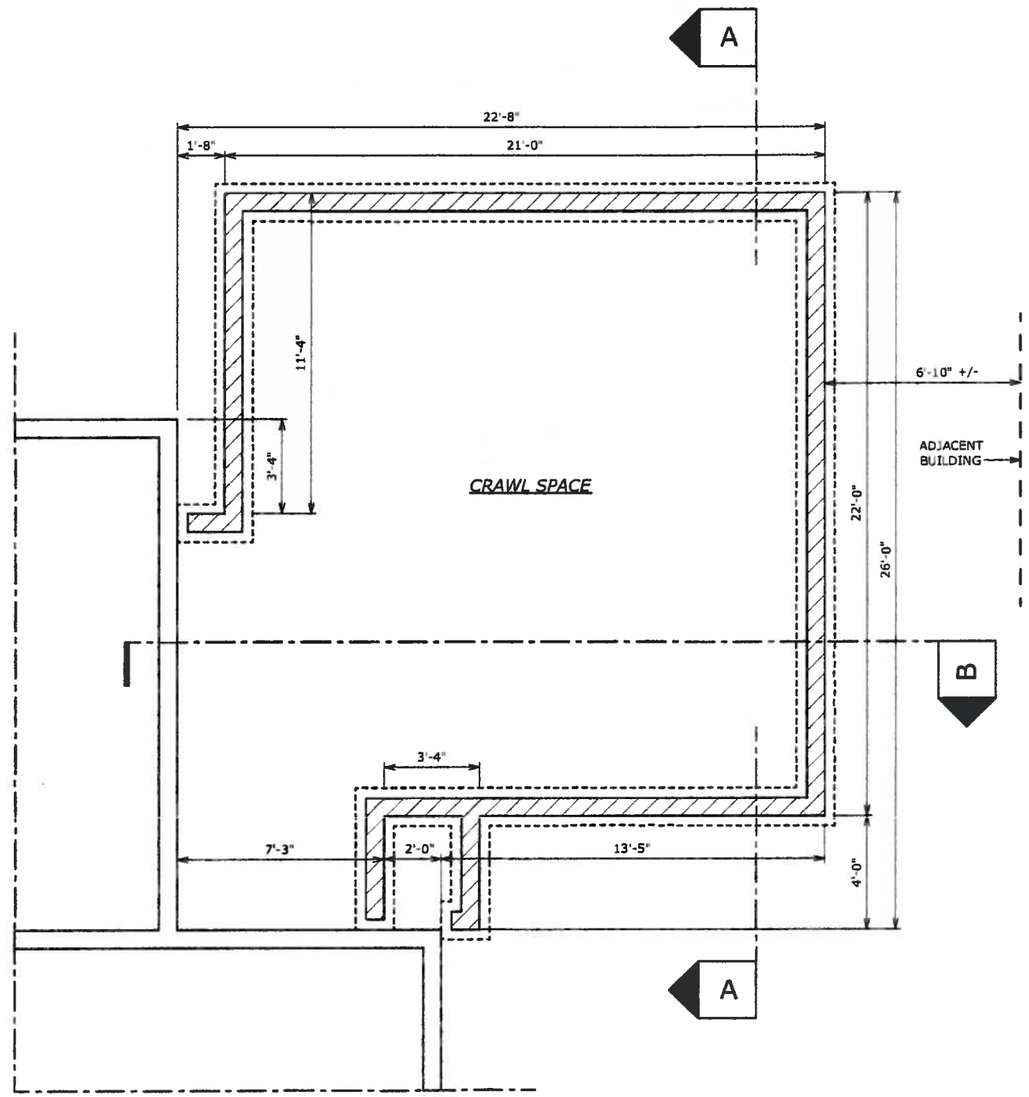

FOUNDATION PLAN

SCALE: 3/16" = 1'-0"

RECEIVED
OCT 19 2012
12-077ARB-MPR
CITY OF DUBLIN
PLANNING

090512	PRELIMINARY
000000	BIDDING
000000	CONSTRUCTION
000000	REVISIONS

Tom Bassett
35 + 39 S. High St.
Dublin, Ohio 43017

BOLYARD ARCHITECTURE + DESIGN STUDIO
60 Franklin Street
Dublin, Ohio 43017
614.774.2490 Phone
614.633.1053 Fax
www.bolyardstudio.com

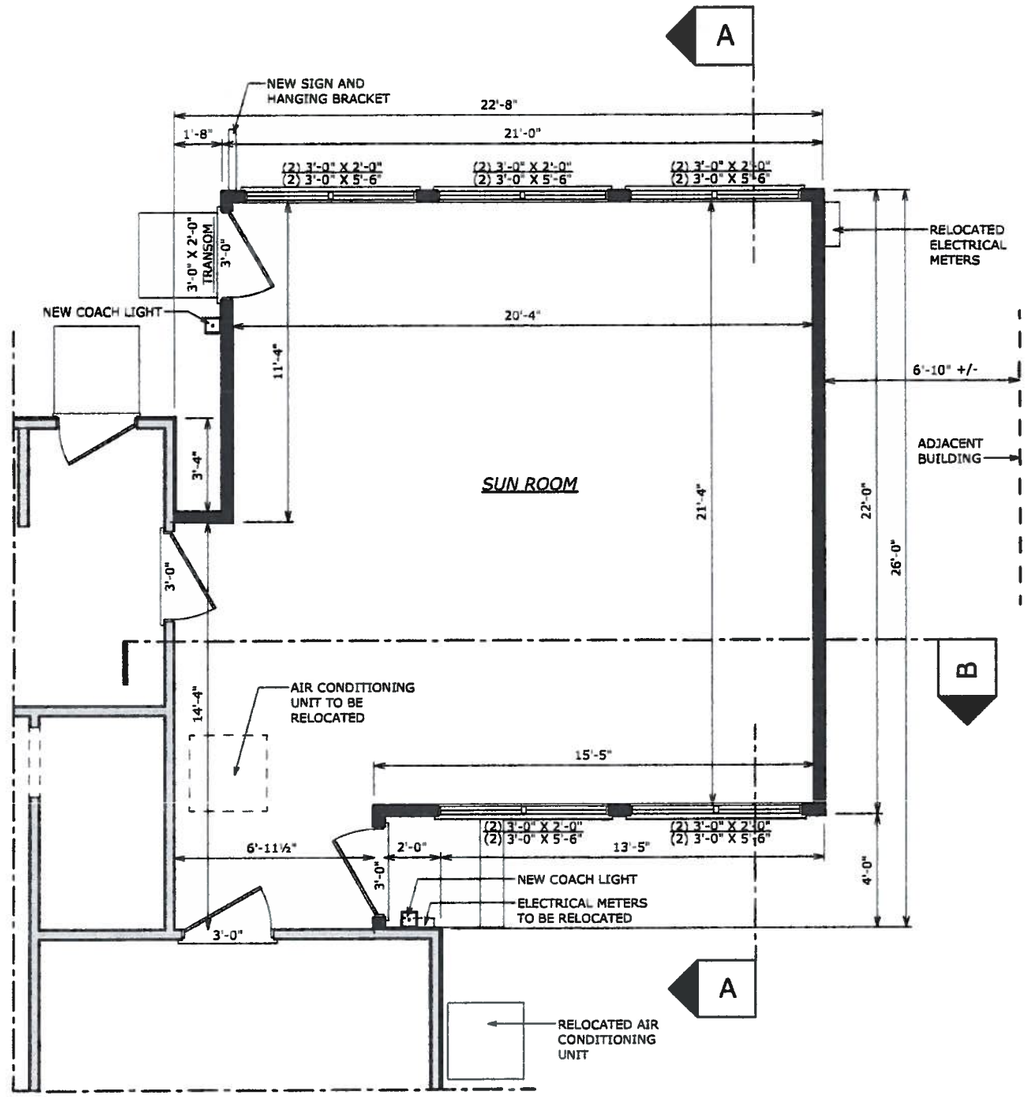

FIRST FLOOR PLAN

SCALE: 3/16" = 1'-0"

SUN ROOM ADDITION - 500.6 SQUARE FEET
EXISTING STRUCTURE - 2386 SQUARE FEET
TOTAL - 2886.6 SQUARE FEET

RECEIVED
OCT 19 2012
12-07ARB MPR
CITY OF DUBLIN
PLANNING

090512	PRELIMINARY
000000	BIDDING
000000	CONSTRUCTION
000000	REVISIONS

Tom Bassett
35 + 39 S. High St.
Dublin, Ohio 43017

BOLYARD ARCHITECTURE + DESIGN STUDIO
60 Franklin Street
Dublin, Ohio 43017
614.774.2490 Phone
614.633.1053 Fax
www.bolyardstudio.com

CODED NOTES

1	STUCCO, PAINTED SW7533 KHAKI SHADE. NEW STUCCO TO MATCH EXISTING TEXTURE	12	WOOD PANELS, PAINTED SW7556 CREME
2	EXISTING FASCIA, PAINTED SW7556 CREME	13	DOOR, PAINTED SW6896 SOLE
3	EXISTING GUTTERS AND DOWNSPOUTS, PAINTED SW7556 CREME	14	WINDOW, EXISTING WHITE
4	EXISTING RAKE BOARD, PAINTED SW7556 CREME	15	MONARCH LEADERHEAD, C&J METAL PRODUCTS, GALVANIZED STEEL, PAINTED SW7556 CREME
5	EXISTING FRIEZE BOARD, PAINTED SW7556 CREME	16	3" ROUND, GALVANIZED STEEL DOWNSPOUT
6	1X4 TRIM, PAINTED SW7556 CREME	17	OUTDOOR LANTERN, ILLUMINE, 1 LIGHT
7	BUILT-UP CORNICE, PAINTED SW7556 CREME	18	ASPHALT SHINGLES OVER RUBBER ROOF
8	1X10 TRIM, PAINTED SW7556 CREME	19	CONCRETE LANDING AND STEPS
9	1X2 TRIM, PAINTED SW7556 CREME	20	EXPOSED CONCRETE BLOCK
10	BOARD AND BATTEN, PAINTED SW6896 SOLE	21	NEW SIGN AND HANGING BRACKET
11	EXISTING TRIM AND COLUMNS, PAINTED SW7556 CREME	22	NEW SURFACE MOUNTED SIGN

EAST ELEVATION

SCALE: 3/16" = 1'-0"

RECEIVED
OCT 19 2012
12-077ARCB MPR
CITY OF DUBLIN
PLANNING

090512	PRELIMINARY
000000	BIDDING
000000	CONSTRUCTION
000000	REVISIONS

Tom Bassett
35 + 39 S. High St.
Dublin, Ohio 43017

BOLYARD ARCHITECTURE + DESIGN STUDIO

60 Franklin Street
Dublin, Ohio 43017
614.774.2490 Phone
614.633.1053 Fax
www.bolyardstudio.com

CODED NOTES

1	STUCCO, PAINTED SW7533 KHAKI SHADE. NEW STUCCO TO MATCH EXISTING TEXTURE	12	WOOD PANELS, PAINTED SW7556 CREME
2	EXISTING FASCIA, PAINTED SW7556 CREME	13	DOOR, PAINTED SW6896 SOLE
3	EXISTING GUTTERS AND DOWNSPOUTS, PAINTED SW7556 CREME	14	WINDOW, EXISTING WHITE
4	EXISTING RAKE BOARD, PAINTED SW7556 CREME	15	MONARCH LEADERHEAD, C&J METAL PRODUCTS, GALVANIZED STEEL, PAINTED SW7556 CREME
5	EXISTING FRIEZE BOARD, PAINTED SW7556 CREME	16	3" ROUND, GALVANIZED STEEL DOWNSPOUT
6	1X4 TRIM, PAINTED SW7556 CREME	17	OUTDOOR LANTERN, ILLUMINE, 1 LIGHT
7	BUILT-UP CORNICE, PAINTED SW7556 CREME	18	ASPHALT SHINGLES OVER RUBBER ROOF
8	1X10 TRIM, PAINTED SW7556 CREME	19	CONCRETE LANDING AND STEPS
9	1X2 TRIM, PAINTED SW7556 CREME	20	EXPOSED CONCRETE BLOCK
10	BOARD AND BATTEN, PAINTED SW6896 SOLE	21	NEW SIGN AND HANGING BRACKET
11	EXISTING TRIM AND COLUMNS, PAINTED SW7556 CREME	22	NEW SURFACE MOUNTED SIGN

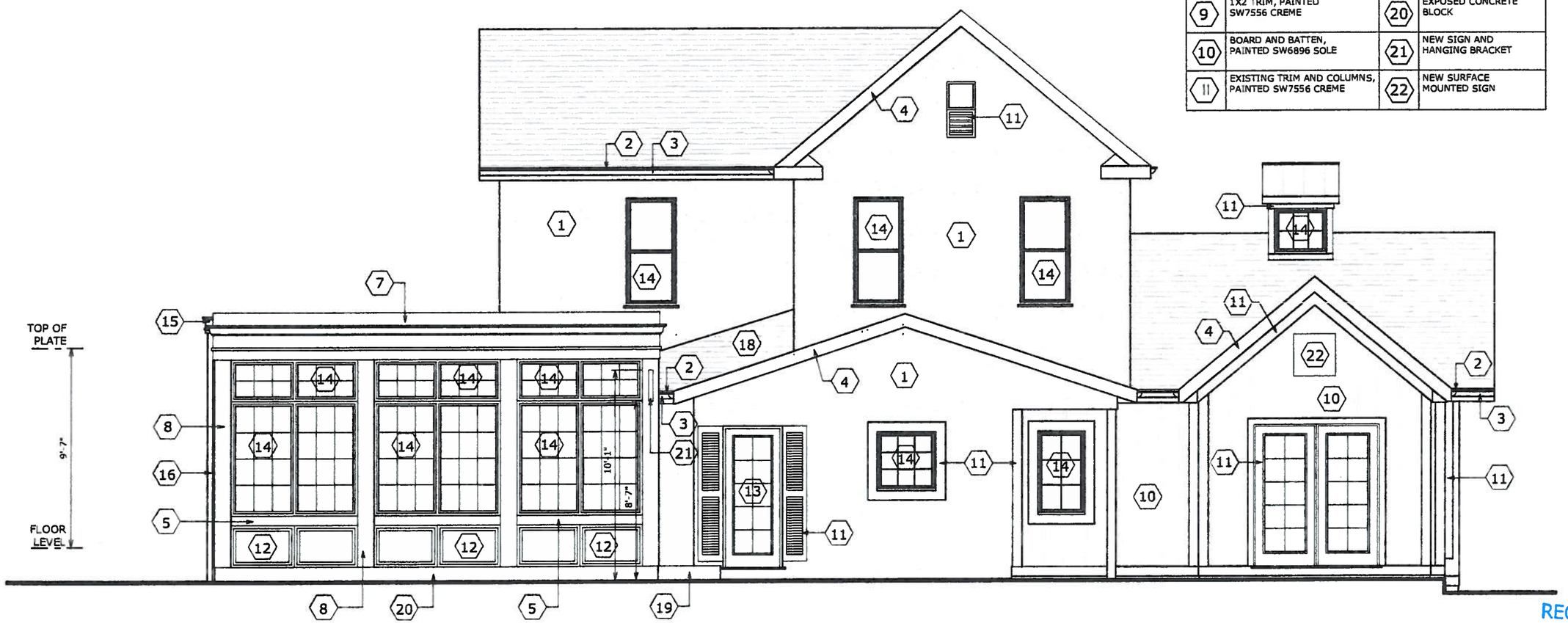

WEST ELEVATION

SCALE: 3/16" = 1'-0"

RECEIVED
OCT 19 2012
12-077ARB MPR
CITY OF DUBLIN
PLANNING

090512	PRELIMINARY
000000	BIDDING
000000	CONSTRUCTION
000000	REVISIONS

Tom Bassett
35 + 39 S. High St.
Dublin, Ohio 43017

BOLYARD ARCHITECTURE + DESIGN STUDIO
60 Franklin Street
Dublin, Ohio 43017
614.774.2490 Phone
614.633.1053 Fax
www.bolyardstudio.com

CODED NOTES

1	STUCCO, PAINTED SW7533 KHAKI SHADE. NEW STUCCO TO MATCH EXISTING TEXTURE	12	WOOD PANELS, PAINTED SW7556 CREME
2	EXISTING FASCIA, PAINTED SW7556 CREME	13	DOOR, PAINTED SW6896 SOLE
3	EXISTING GUTTERS AND DOWNSPOUTS, PAINTED SW7556 CREME	14	WINDOW, EXISTING WHITE
4	EXISTING RAKE BOARD, PAINTED SW7556 CREME	15	MONARCH LEADERHEAD, C&J METAL PRODUCTS, GALVANIZED STEEL, PAINTED SW7556 CREME
5	EXISTING FRIEZE BOARD, PAINTED SW7556 CREME	16	3" ROUND, GALVANIZED STEEL DOWNSPOUT
6	1X4 TRIM, PAINTED SW7556 CREME	17	OUTDOOR LANTERN, ILLUMINE, 1 LIGHT
7	BUILT-UP CORNICE, PAINTED SW7556 CREME	18	ASPHALT SHINGLES OVER RUBBER ROOF
8	1X10 TRIM, PAINTED SW7556 CREME	19	CONCRETE LANDING AND STEPS
9	1X2 TRIM, PAINTED SW7556 CREME	20	EXPOSED CONCRETE BLOCK
10	BOARD AND BATTEN, PAINTED SW6896 SOLE	21	NEW SIGN AND HANGING BRACKET
11	EXISTING TRIM AND COLUMNS, PAINTED SW7556 CREME	22	NEW SURFACE MOUNTED SIGN

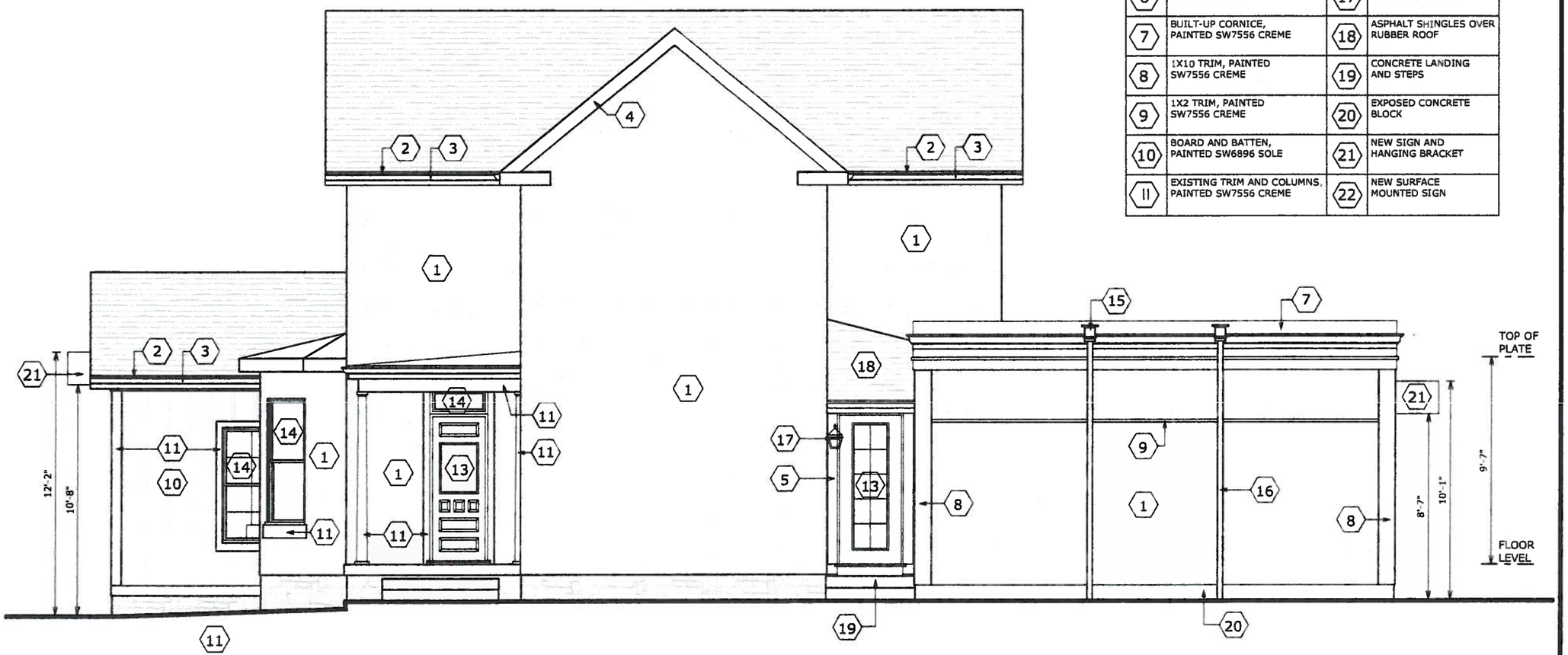

NORTH ELEVATION

SCALE: 3/16" = 1'-0"

RECEIVED
OCT 19 2012
12-077ARBMPR
CITY OF DUBLIN
PLANNING

090512	PRELIMINARY
000000	BIDDING
000000	CONSTRUCTION
000000	REVISIONS

Tom Bassett
35 + 39 S. High St.
Dublin, Ohio 43017

BOLYARD ARCHITECTURE + DESIGN STUDIO

60 Franklin Street
Dublin, Ohio 43017
614.774.2490 Phone
614.633.1053 Fax
www.bolyardstudio.com

CODED NOTES

1	STUCCO, PAINTED SW7533 KHAKI SHADE. NEW STUCCO TO MATCH EXISTING TEXTURE	12	WOOD PANELS, PAINTED SW7556 CREME
2	EXISTING FASCIA, PAINTED SW7556 CREME	13	DOOR, PAINTED SW6896 SOLE
3	EXISTING GUTTERS AND DOWNSPOUTS, PAINTED SW7556 CREME	14	WINDOW, EXISTING WHITE
4	EXISTING RAKE BOARD, PAINTED SW7556 CREME	15	MONARCH LEADERHEAD, C&J METAL PRODUCTS, GALVANIZED STEEL, PAINTED SW7556 CREME
5	EXISTING FRIEZE BOARD, PAINTED SW7556 CREME	16	3" ROUND, GALVANIZED STEEL DOWNSPOUT
6	1X4 TRIM, PAINTED SW7556 CREME	17	OUTDOOR LANTERN, ILLUMINE, 1 LIGHT
7	BUILT-UP CORNICE, PAINTED SW7556 CREME	18	ASPHALT SHINGLES OVER RUBBER ROOF
8	1X10 TRIM, PAINTED SW7556 CREME	19	CONCRETE LANDING AND STEPS
9	1X2 TRIM, PAINTED SW7556 CREME	20	EXPOSED CONCRETE BLOCK
10	BOARD AND BATTEN, PAINTED SW6896 SOLE	21	NEW SIGN AND HANGING BRACKET
11	EXISTING TRIM AND COLUMNS, PAINTED SW7556 CREME	22	NEW SURFACE MOUNTED SIGN

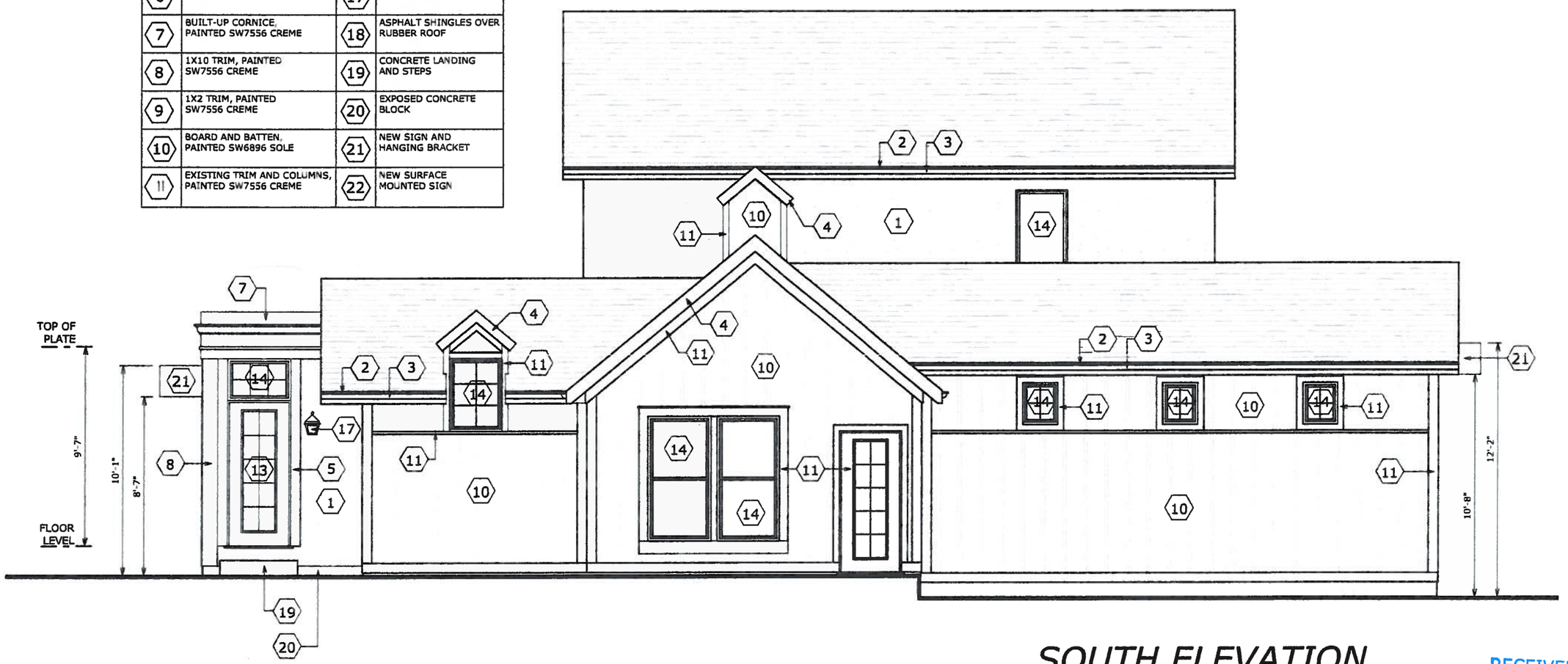

SOUTH ELEVATION

SCALE: 3/16" = 1'-0"

RECEIVED
OCT 19 2012
CITY OF DUBLIN
PLANNING

090512	PRELIMINARY
000000	BIDDING
000000	CONSTRUCTION
000000	REVISIONS

Tom Bassett
35 + 39 S. High St.
Dublin, Ohio 43017

BOLYARD ARCHITECTURE + DESIGN STUDIO
60 Franklin Street
Dublin, Ohio 43017
614.774.2490 Phone
614.633.1053 Fax
www.bolyardstudio.com