BRAND ROAD
SHARED-USE PATH

MUIRFIELD DRIVE TO EARLINGTON PARKWAY
BRAND ROAD TO MOORS PLACE

11 - 022 - CIP

City of Dublin

INDEX

TITLE SHEET	1
SURVEY CONTROL PLAN	2
TYPICAL SECTIONS	3
GENERAL NOTES	4–5, 5A
EROSION CONTROL NOTES AND DETAILS	6
MAINTENANCE OF TRAFFIC	7
GENERAL SUMMARY	8
PLAN AND PROFILE – ℄ "A"	9–16
PLAN AND PROFILE – ℄ "C"	17–18
CROSS SECTIONS – ℄ "A"	19–27
CROSS SECTIONS – ℄ "C"	28–29
DRIVE DETAILS	30
GRADING PLAN – ℄ "A"	31–37
GRADING PLAN – ℄ "C"	38
BRIDGE PLANS	39–48
NOT USED	49

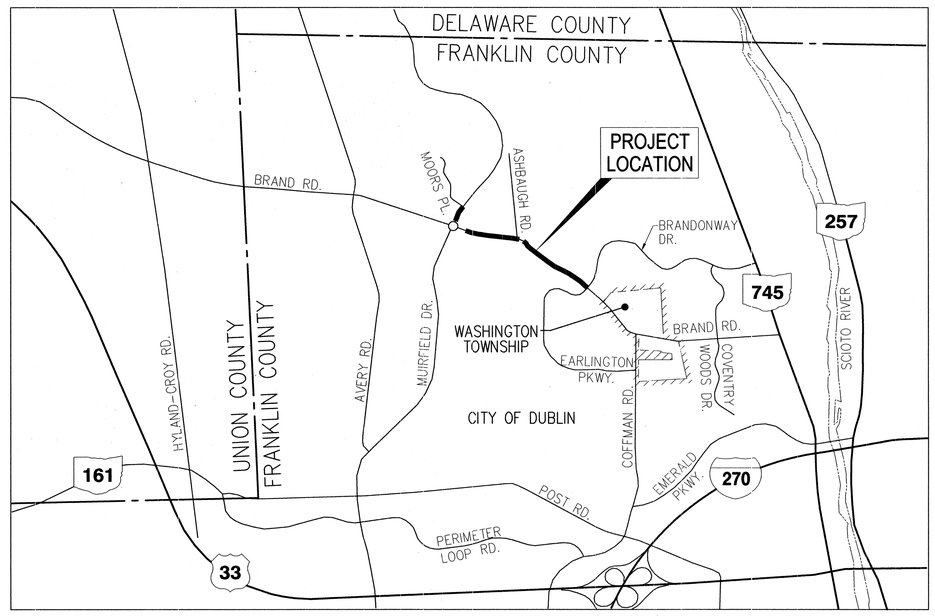

LOCATION MAP

0 1/2 1

SCALE IN MILES

N

ENGINEERS SEAL:

STATE OF OHIO
KEVIN JOSEPH GRATHWOL
E-58282
REGISTERED
PROFESSIONAL ENGINEER

REGISTERED ENGINEER — DATE 8/14/13

SIGNATURES BELOW SIGNIFY CONCURRENCE WITH THE GENERAL PURPOSES AND GENERAL LOCATION OF THE PROJECT ONLY AND DO NOT CONSTITUTE ASSURANCE TO OPERATE AS INTENDED. ALL TECHNICAL DETAILS REMAIN THE RESPONSIBILITY OF THE PROFESSIONAL CIVIL ENGINEER PREPARING THE PLANS.

APPROVED:

CITY ENGINEER, CITY OF DUBLIN, OHIO — DATE

APPROVAL ON THE PART OF THE CITY OF COLUMBUS IS GIVEN PURSUANT TO THE PROVISIONS OF THE WATER SERVICE AGREEMENT BETWEEN THE CITY OF DUBLIN, OHIO AND THE CITY OF COLUMBUS, OHIO ON APRIL 13, 1993 AND ALL SUBSEQUENT AMENDMENTS THEREOF.

ADMINISTRATOR, DIVISION OF WATER
CITY OF COLUMBUS — DATE

DIRECTOR, DEPARTMENT OF PUBLIC UTILITIES
CITY OF COLUMBUS — DATE

Ohio Utilities Protection Service
Call 811 before you dig

STANDARD CONSTRUCTION DRAWINGS

CITY OF DUBLIN	ODOT		CITY OF COLUMBUS	
PD–03	DM–4.4	7–20–12	1441	L–6316A
				L–6316B
RD–05	MT–95.30	7–20–12	AA–S102	
RD–06	MT–95.40	7–20–12	AA–S106	
	MT–97.10	7–20–12	AA–S107	
ST–03	MT–97.11	7–20–12	AA–S112	
	MT–105.10	7–20–12	AA–S117	
			AA–S119	
			AA–S133A	
			AA–S139	
			AA–S151	

GPD GROUP®
Glaus, Pyle, Schomer, Burns & DeHaven, Inc.
1801 Watermark Drive, Suite 150
Columbus, Ohio 43215
614-210-0751 Fax 614-210-0752

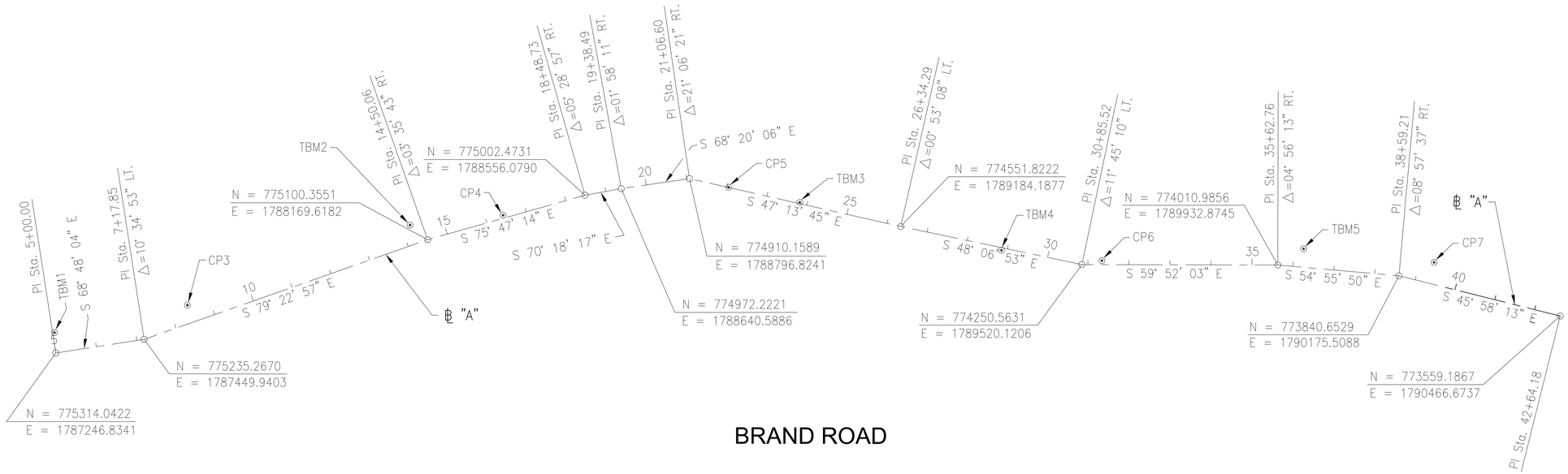

BENCHMARK:

N39RESET ELEV. = 886.77 (NAVD88)

ALUMINUM DISK SET IN THE TOP OF THE SOUTH END OF THE EAST ABUTMENT OF BRAND ROAD BRIDGE WAS-44-2.09 OVER NORTH FORK INDIAN RUN, 0.20 MILES NORTHWEST OF COFFMAN ROAD.

REF #	STATION	OFFSET	NORTHING	EASTING	ELEV.	DESCRIPTION
CP1	4+65.10	31.59' RT.	775940.3664	1787090.3763	905.78	IPINS /CAPPED WESCG #500102
CP2			775455.0293	1786773.9818	910.16	IPINS /CAPPED WESCG #500101
CP3	8+45.13	43.68' LT.	775254.7490	1787583.0890		IPID /CAPPED STANTEC #301
CP4	16+43.29	7.28' LT.	775059.9720	1788358.7170		IPID /CAPPED STANTEC #302
CP5	22+02.24	2.48' LT.	774844.0260	1788868.7160		IPID /CAPPED STANTEC #303
CP6	31+32.65	12.38' LT.	774234.6040	1789567.1020		IPID /CAPPED STANTEC #304
CP7	39+34.28	52.40' LT.	773826.1560	1790265.9040	887.82	IPID /CAPPED STANTEC #305
TBM1	5+04.52	49.89' LT.	775358.9232	1787269.0940	905.62	S.W. CORNER CONC. BASE L/POLE
TBM2	14+21.59	47.75' LT.	775152.5374	1788150.4372	900.39	CGS IN S. SIDE P/POLE
TBM3	23+81.56	2.89' LT.	774725.5681	1789000.6296	893.80	N.W. BOLT F.HYD.
TBM4	28+86.57	6.20' RT.	774378.7734	1789367.8742	890.36	CGS IN N. SIDE P/POLE
TBM5	36+22.12	44.86' LT.	774013.5955	1790007.2373	888.98	N.W. CORNER OF N.W. WINGWALL

LEGEND

CP = CONTROL POINT
CGS = COTTON GIN SPIKE FOUND
IPID = IRON PIN FOUND W/ CAP
IPINS = IRON PIN SET W/ CAP

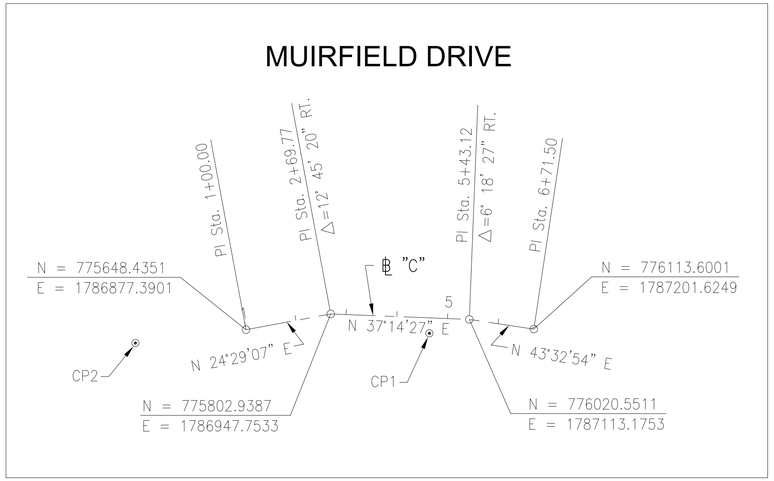

SURVEY CONTROL PLAN

BRAND ROAD
SHARED-USE PATH

HORIZONTAL SCALE IN FEET
0 75 150 300

CALCULATED LAM
CHECKED KJG

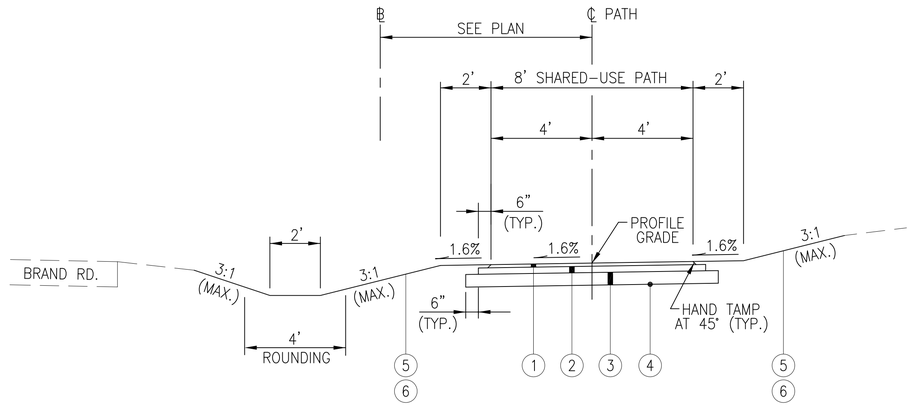

TYPICAL SECTION SHARED-USE PATH

℄ "A" STA. 5+99.41 TO STA. 7+50.00
℄ "A" STA. 8+40.00 TO STA. 11+90.00
℄ "A" STA. 17+10.00 TO STA. 18+60.00
℄ "A" STA. 21+19.48 TO STA. 35+15.00
℄ "A" STA. 37+10.00 TO STA. 41+50.00
℄ "C" STA. 1+17.72 TO STA. 1+35.00
℄ "C" STA. 6+22.54 TO STA. 6+51.64

CROSS SLOPE TRANSITIONS:
SHARED-USE PATH CROSS SLOPE TRANSITIONS TO BE COMPLETED OVER A 10' LENGTH, CENTERED ABOUT THE STATIONS LISTED ON THE TYPICAL SECTIONS.

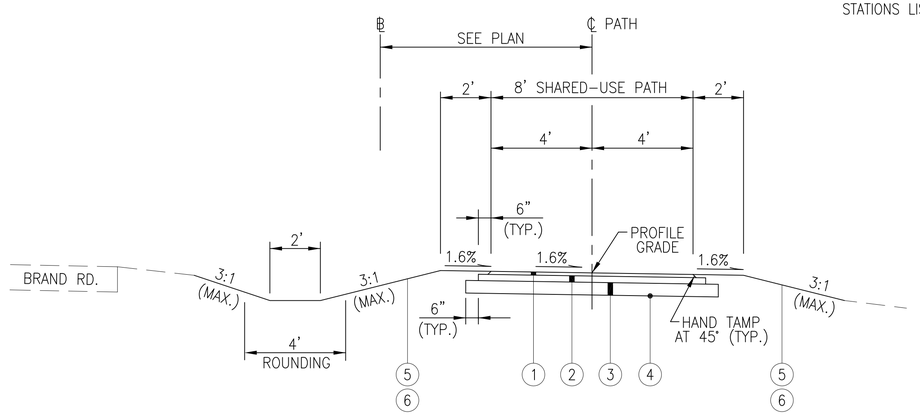

TYPICAL SECTION SHARED-USE PATH

℄ "A" STA. 7+50.00 TO STA. 7+66.38
℄ "A" STA. 8+04.13 TO STA. 8+40.00
℄ "A" STA. 11+90.00 TO STA. 17+10.00
℄ "A" STA. 18+60.00 TO STA. 19+63.64
℄ "A" STA. 35+15.00 TO STA. 37+10.00
℄ "A" STA. 41+50.00 TO STA. 42+22.75
℄ "C" STA. 1+35.00 TO STA. 5+58.51

LEGEND

1. ITEM 448 – 1 1/2" ASPHALT CONCRETE SURFACE COURSE, TYPE I, PG64-22, MEDIUM TRAFFIC
2. ITEM 301 – 3" ASPHALT CONCRETE BASE, PG64-22
3. ITEM 304 – 6" AGGREGATE BASE
4. ITEM 204 – SUBGRADE COMPACTION
5. ITEM 659 – SEEDING AND MULCHING, AS PER PLAN
6. ITEM 653 – 3" TOPSOIL FURNISHED AND PLACED, AS PER PLAN

CALCULATED LAM
CHECKED KJG

TYPICAL SECTIONS

BRAND ROAD
SHARED-USE PATH

GENERAL

CITY OF COLUMBUS CONSTRUCTION AND MATERIAL SPECIFICATIONS, CURRENT EDITION, AND ANY SUPPLEMENTS THERETO (HEREAFTER REFERRED TO AS STANDARD SPECIFICATIONS) SHALL GOVERN ALL CONSTRUCTION ITEMS UNLESS OTHERWISE NOTED. ITEM NUMBERS LISTED REFER TO CITY OF COLUMBUS ITEM NUMBERS UNLESS OTHERWISE NOTED.

THE CONTRACTOR INTENDING TO SUBMIT A BID FOR CITY OF DUBLIN (HEREAFTER REFERRED TO AS "CITY") CAPITAL IMPROVEMENT CONTRACTS SHALL BE PREQUALIFIED WITH THE OHIO DEPARTMENT OF TRANSPORTATION IN ACCORDANCE WITH SECTION 102 OF THE ODOT CONSTRUCTION AND MATERIAL SPECIFICATIONS AND CHAPTER 5525 OF THE OHIO REVISED CODE CONCERNING CONSTRUCTION CONTRACTS.

ALL ITEMS OF WORK CALLED FOR ON THE PLANS FOR WHICH NO SPECIFIC METHOD OF PAYMENT IS PROVIDED SHALL BE PERFORMED BY THE CONTRACTOR WITH THE COST TO BE INCLUDED IN THE UNIT PRICE BID FOR THE VARIOUS RELATED ITEMS.

IT IS THE INTENTION OF THE CONTRACT DOCUMENTS TO PROVIDE AND REQUIRE A COMPLETED PROJECT READY FOR OPERATION. ANY WORK ITEMS OMITTED FROM THE CONTRACT DOCUMENTS WHICH ARE CLEARLY NECESSARY FOR COMPLETION OF THE WORK AND ITS APPURTENANCES SHALL BE CONSIDERED A PART OF SUCH WORK, THOUGH NOT DIRECTLY SPECIFIED OR CALLED FOR IN THE CONTRACT DOCUMENTS. THIS INCLUDES, BUT IS NOT LIMITED TO, SUCH INCIDENTAL ITEMS AS RELOCATION OF MAIL BOXES, SAW CUTTING, AND REMOVAL AND/OR RELOCATION OF SIGNS, SPRINKLERS, OR OTHER MISCELLANEOUS ITEMS.

THE CONTRACTOR SHALL NOTIFY THE CITY OF DUBLIN, DIVISION OF ENGINEERING IN WRITING AT LEAST 3 WORKING DAYS PRIOR TO BEGINNING CONSTRUCTION.

THE CITY ENGINEER SHALL NOT BE RESPONSIBLE FOR MEANS, METHODS, PROCEDURES, TECHNIQUES, OR SEQUENCES OF CONSTRUCTION THAT ARE NOT SPECIFIED HEREIN. THE CITY ENGINEER SHALL NOT BE RESPONSIBLE FOR SAFETY ON THE WORK SITE, OR FOR FAILURE BY THE CONTRACTOR TO PERFORM WORK ACCORDING TO THE CONTRACT DOCUMENTS.

THE CITY SHALL BE RESPONSIBLE TO OBTAIN ALL NECESSARY PERMITS.

THE CONTRACTOR SHALL BE SOLELY RESPONSIBLE FOR COMPLYING WITH ALL FEDERAL, STATE AND LOCAL SAFETY REQUIREMENTS, INCLUDING THE OCCUPATIONAL SAFETY AND HEALTH ACT OF 1970. THE CONTRACTOR SHALL EXERCISE CAUTION ALWAYS FOR THE PROTECTION OF PERSONS (INCLUDING EMPLOYEES) AND PROPERTY. IT SHALL ALSO BE THE SOLE RESPONSIBILITY OF THE CONTRACTOR TO INITIATE, MAINTAIN, AND SUPERVISE ALL SAFETY REQUIREMENTS, PRECAUTIONS, AND PROGRAMS IN CONNECTION WITH THE WORK, INCLUDING THE REQUIREMENTS FOR CONFINED SPACES PER 29 CFR 1910.146.

ANY MODIFICATION TO THE WORK AS SHOWN ON THESE APPROVED PLANS SHALL HAVE PRIOR WRITTEN APPROVAL OF THE CITY ENGINEER.

THE CONTRACTOR SHALL RESTRICT CONSTRUCTION ACTIVITY TO PUBLIC RIGHT-OF-WAY AND AREAS DEFINED AS PERMANENT AND/OR TEMPORARY CONSTRUCTION EASEMENTS, AND/OR THE LIMITS OF DISTURBANCE SHOWN.

PROPERTY BOUNDARIES, INCLUDING PROPERTY LINES AND ROAD RIGHT-OF-WAY, ARE SHOWN FROM THE BEST INFORMATION AVAILABLE AND ARE NOT NECESSARILY COMPLETE OR CORRECT.

THE CONTRACTOR SHALL BE RESPONSIBLE FOR HAVING THE FINISHED WORK CONFORM TO THE LINES, GRADES, ELEVATIONS, AND DIMENSIONS CALLED FOR ON THE DRAWINGS AND TYPICAL SECTIONS. PAYMENT FOR CONSTRUCTION LAYOUT SHALL BE MADE AT THE LUMP SUM PRICE BID FOR ITEM 623, CONSTRUCTION LAYOUT STAKES.

THE CONTRACTOR SHALL SUBSTANTIALLY RESTORE ALL DISTURBED AREAS TO EQUAL OR BETTER CONDITION THAN EXISTED BEFORE CONSTRUCTION. DRAINAGE DITCHES OR WATERCOURSES THAT ARE DISTURBED BY CONSTRUCTION SHALL BE RESTORED TO THE GRADES AND CROSS-SECTIONS THAT EXISTED BEFORE CONSTRUCTION.

NON-RUBBER TIRED VEHICLES SHALL NOT BE MOVED ON OR ACROSS PUBLIC STREETS OR HIGHWAYS WITHOUT WRITTEN PERMISSION FROM THE CITY ENGINEER.

TRACKING OR SPILLING MUD, DIRT OR DEBRIS UPON STREETS, RESIDENTIAL OR COMMERCIAL DRIVES, SIDEWALKS OR SHARED-USE PATHS IS PROHIBITED AND ANY SUCH OCCURRENCE SHALL BE CLEANED UP IMMEDIATELY BY THE CONTRACTOR AT NO COST TO THE CITY. IF THE CONTRACTOR FAILS TO REMOVE THE MUD, DIRT, DEBRIS OR SPILLAGE, THE CITY OF DUBLIN RESERVES THE RIGHT TO REMOVE THESE MATERIALS AND CLEAN AFFECTED AREAS, THE COST OF WHICH SHALL BE WITHHELD FROM MONIES THAT ARE DUE OR MAY BECOME DUE TO THE CONTRACTOR.

ALL SIGNS, LANDSCAPING, STRUCTURES, OR OTHER APPURTENANCES DISTURBED OR DAMAGED DURING CONSTRUCTION SHALL BE REPLACED OR REPAIRED TO THE SATISFACTION OF THE CITY ENGINEER. THE COST OF THIS WORK SHALL BE PAID FOR BY THE CONTRACTOR.

ALL PRECAST CONCRETE PRODUCTS SHALL BE INSPECTED AT THE LOCATION OF MANUFACTURE. APPROVED PRECAST CONCRETE PRODUCTS WILL BE STAMPED NOTING THAT INSPECTION HAS BEEN PERFORMED BY THE CITY OF COLUMBUS. PRECAST CONCRETE PRODUCTS WITHOUT PROOF OF INSPECTION SHALL NOT BE APPROVED FOR INSTALLATION.

EXCESS EXCAVATED MATERIAL FROM THIS PROJECT SHALL BE HAULED OFFSITE BY THE CONTRACTOR AND COMPENSATION FOR HAULING SHALL BE INCLUDED IN THE UNIT PRICE BID FOR ITEM 203, EXCAVATION.

THE COST OF ALL ASPHALT PAVEMENT REMOVAL AND DISPOSAL SHALL BE INCLUDED IN THE PRICE BID PER CUBIC YARD FOR ITEM 203, EXCAVATION. THE COST OF CONCRETE PAVEMENT REMOVAL AND DISPOSAL WILL BE PAID AT THE UNIT PRICE BID PER SQUARE YARD FOR ITEM 202, PAVEMENT REMOVED.

ALL NON-PAVEMENT AREAS DISTURBED WITHIN THE DESIGNATED EASEMENTS, RIGHTS-OF-WAY, AND LIMITS OF DISTURBANCE AS SHOWN, SHALL BE SEEDED AND MULCHED IN ACCORDANCE WITH ITEM 659, SEEDING AND MULCHING, AS PER PLAN. ALL AREAS DISTURBED OUTSIDE THESE LIMITS SHALL BE SEEDED AND MULCHED AT THE CONTRACTOR'S EXPENSE.

THE CONTRACTOR SHALL BE RESPONSIBLE FOR ENSURING THAT U.S. MAIL DELIVERY WITHIN THE PROJECT LIMITS IS NOT DISRUPTED BY CONSTRUCTION OPERATIONS. THIS RESPONSIBILITY IS LIMITED TO RELOCATION OF MAILBOXES TO A TEMPORARY LOCATION THAT WILL ALLOW THE COMPLETION OF THE WORK AND SHALL ALSO INCLUDE THE RESTORATION OF MAILBOXES TO THEIR ORIGINAL LOCATION OR APPROVED NEW LOCATION. ANY RELOCATION OF MAILBOX SERVICES MUST FIRST BE COORDINATED WITH THE U.S. POSTAL SERVICE AND AFFECTED PROPERTY OWNERS. THE COST OF THIS WORK SHALL BE INCLUDED IN THE PRICES BID FOR THE VARIOUS ITEMS OF THE CONTRACT.

PAVEMENT

PAVEMENTS SHALL BE CUT IN NEAT, STRAIGHT LINES THE FULL DEPTH OF THE EXISTING PAVEMENT, OR AS REQUIRED BY THE CITY ENGINEER.

PAVEMENT REPLACEMENT SHALL BE CONDUCTED ACCORDING TO CITY OF COLUMBUS STANDARD DRAWING 1441 AND APPLICABLE CITY OF DUBLIN STANDARD DRAWINGS. THE REPLACEMENT OF DRIVEWAYS, HANDICAPPED RAMPS, SIDEWALKS, SHARED-USE PATHS, PARKING LOT PAVEMENT, ETC. SHALL BE PROVIDED ACCORDING TO THE APPROVED CONSTRUCTION DRAWINGS AND CITY OF DUBLIN STANDARD CONSTRUCTION DRAWINGS.

THE CONTRACTOR SHALL SUBMIT TO THE CITY ENGINEER AT THE PRECONSTRUCTION MEETING HIS PROPOSED DESIGN MIX FORMULA FOR ALL BITUMINOUS MIXTURES TO BE PLACED ON THE PROJECT FOR REVIEW AND APPROVAL. A DESIGN MIX FORMULA SHALL BE SUBMITTED FOR EACH MIXTURE AND EACH PRODUCER AND SHALL PROVIDE GRADATION OF ALL COMPONENT AGGREGATES, PERCENTAGE OF BLENDING OF AGGREGATES, PERCENTAGE OF BITUMEN, ANY ADDITIVES AND APPLICATION RATE, NAMES AND ADDRESSES OF AGGREGATE SUPPLIERS, MARSHALL MIX DESIGN DATA, AND THE THEORETICAL LABORATORY DENSITY.

THE CONTRACTOR IS NOT PERMITTED TO USE ANY RECLAIMED MATERIALS IN ITEM 304.

SUBGRADE

ALL SOIL SUBGRADES SHALL BE PREPARED AND COMPACTED IN ACCORDANCE WITH ITEM 204, SUBGRADE COMPACTION, TO A DEPTH OF 12-INCHES BELOW THE SUBGRADE SURFACE. SUBGRADE SHALL BE SCARIFIED AND CONTAIN SUFFICIENT MOISTURE TO MEET ITEM 204 COMPACTION REQUIREMENTS.

SUBGRADE COMPACTION SHALL BE REQUIRED UNDER THE SHARED-USE PATHS, AND SHALL FOLLOW THE REQUIREMENTS FOR COMPACTION UNDER DRIVEWAYS AS DESCRIBED IN SECTION 204.03. THE COST SHALL BE INCLUDED IN THE UNIT PRICE BID FOR ITEM 204, SUBGRADE COMPACTION.

PROOF SURVEY

FOLLOWING COMPLETION OF CONSTRUCTION, A PROOF SURVEY SHALL BE PROVIDED BY THE CONTRACTOR TO THE DIVISION OF ENGINEERING THAT DOCUMENTS AS-BUILT INFORMATION OF ALL ELEMENTS OF THIS PROJECT. THE SURVEY SHALL BE PREPARED AND SIGNED BY AN OHIO PROFESSIONAL SURVEYOR. THE CONTRACTOR SHALL REVISE THE ORIGINAL MYLARS IN RED INK, TO THE SATISFACTION OF THE CITY, SHOWING ALL CHANGES IN THE WORK. THE COST OF THE PROOF SURVEY, INCLUDING MYLAR REVISIONS, WILL BE PAID AT THE LUMP SUM PRICE BID FOR ITEM SPECIAL, PROOF SURVEY.

SURVEY MONUMENTATION

THE CONTRACTOR SHALL CAREFULLY PRESERVE BENCH MARKS, PROPERTY CORNERS, REFERENCE POINTS, STAKES AND OTHER SURVEY REFERENCE MONUMENTS OR MARKERS. IN CASES OF WILLFUL OR CARELESS DESTRUCTION, THE CONTRACTOR SHALL BE RESPONSIBLE FOR RESTORATIONS. RESETTING OF MARKERS SHALL BE PERFORMED BY AN OHIO PROFESSIONAL SURVEYOR AS APPROVED BY THE CITY ENGINEER AT THE CONTRACTOR'S EXPENSE.

FRANKLIN COUNTY ENGINEER'S MONUMENTATION

THE CONTRACTOR SHALL CONTACT THE FRANKLIN COUNTY ENGINEER'S OFFICE, SURVEY DEPARTMENT AT 614-462-3026 TWO WORKING DAYS BEFORE DISTURBING ANY FRANKLIN COUNTY GEODETIC MONUMENTS (VERTICAL AND/OR HORIZONTAL) FOR REFERENCE AND REPLACEMENT.

CONSTRUCTION NOISE

ANY DEVICE SHALL NOT BE OPERATED AT ANY TIME IN SUCH A MANNER THAT THE NOISE CREATED SUBSTANTIALLY EXCEEDS THE NOISE CUSTOMARILY AND NECESSARILY ATTENDANT TO THE REASONABLE AND EFFICIENT PERFORMANCE OF SUCH EQUIPMENT. THE CONTRACTOR'S CONSTRUCTION ACTIVITIES SHALL BE CONDUCTED SO AS TO ELIMINATE ALL UNNECESSARY NOISE, DUST, AND ODORS. THE USE OF OIL OR OTHER MATERIAL FOR DUST CONTROL, WHICH MAY CAUSE TRACKING, IS NOT PERMITTED.

WORK LIMITS

THE WORK LIMITS SHOWN ON THESE PLANS ARE FOR PHYSICAL CONSTRUCTION ONLY. THE INSTALLATION AND OPERATION OF ALL TEMPORARY TRAFFIC CONTROL AND TEMPORARY TRAFFIC CONTROL DEVICES REQUIRED BY THESE PLANS SHALL BE PROVIDED BY THE CONTRACTOR WHETHER INSIDE OR OUTSIDE THE WORK LIMITS.

PRIVATE LANDSCAPING ITEMS

CONTRACTOR SHALL CAREFULLY REMOVE AND DELIVER TO THE HOME OWNER PRIVATE LANDSCAPING ITEMS LOCATED WITHIN THE CONSTRUCTION LIMITS. SUCH ITEMS INCLUDE BUT ARE NOT LIMITED TO, LANDSCAPE LIGHTING, ORNAMENTAL FENCES, STONE BOULDERS, ETC.

CONTINGENCY QUANTITIES

THE CONTRACTOR SHALL NEITHER ORDER MATERIALS NOR PERFORM WORK FOR ITEMS DESIGNATED BY PLAN NOTE TO BE USED "AS DIRECTED BY THE CITY ENGINEER" UNLESS AUTHORIZED BY THE CITY ENGINEER.

UTILITIES

UTILITIES KNOWN TO BE LOCATED WITHIN THE LIMITS OF THIS PROJECT ARE LISTED BELOW WITH CONTACT INFORMATION.

COLUMBIA GAS
1600 DUBLIN ROAD
COLUMBUS, OHIO 43215
TEL: 614-481-1058
CELL: 614-634-1812
CONTACT: DAVE KELLY

TIME WARNER CABLE
3760 INTERCHANGE ROAD
COLUMBUS, OHIO 43204
TEL: 614-481-5262
CELL: 614-348-2979
CONTACT: RAY MAURER

AT&T (CONDUIT)
111 N. 4TH STREET
ROOM 802
COLUMBUS, OHIO 43215
TEL: 614-223-7276
CONTACT: GARY VAN ALMSICK

AT&T LEGACY (TRANSMISSION)
HLG CONSULTING
5980-G WILCOX PL.
DUBLIN, OHIO 43016
TEL: 614-760-8320
CONTACT: ED HUGHES

CITY OF DUBLIN
DIVISION OF ENGINEERING
5800 SHIER-RINGS ROAD
DUBLIN, OHIO 43016
TEL: 614-410-4621
CONTACT: MIKE SWEDER, PE

FRONTIER COMMUNICATIONS
1300 COLUMBUS-SANDUSKY RD. N.
MARION, OHIO 43302
TEL: 740-369-0826
CELL: 740-815-0332
CONTACT: COURTNEY MURPHY

WIDE OPEN WEST
3675 CORPORATE DRIVE
COLUMBUS, OHIO 43231
TEL: 614-725-5003
CELL: 614-668-7632
CONTACT: JAYTEE NOVARIA

AT&T (CABLE)
111 N. 4TH STREET
ROOM 802
COLUMBUS, OHIO 43215
TEL: 614-223-6424
CELL: 614-208-9312
CONTACT: KEVIN GLASER

AMERICAN ELECTRIC POWER
850 TECH CENTER DRIVE
GAHANNA, OHIO 43230
TEL: 614-883-6831
CELL: 614-949-8883
CONTACT: PAUL PAXTON

CITY OF COLUMBUS
DIVISION OF WATER
910 DUBLIN ROAD
COLUMBUS, OHIO 43215
TEL: 614-645-7788

THE CONTRACTOR SHALL GIVE NOTICE OF INTENT TO CONSTRUCT TO OHIO UTILITIES PROTECTION SERVICE (TELEPHONE NUMBER 800-362-2764) AND TO OWNERS OF UNDERGROUND UTILITIES THAT ARE NOT MEMBERS OF A REGISTERED UNDERGROUND PROTECTION SERVICE. NOTICE SHALL BE GIVEN AT LEAST TWO WORKING DAYS BEFORE START OF CONSTRUCTION.

THE IDENTITY AND LOCATIONS OF EXISTING UNDERGROUND UTILITIES IN THE CONSTRUCTION AREA HAVE BEEN SHOWN ON THE PLANS AS ACCURATELY AS PROVIDED BY THE OWNER OF THE UNDERGROUND UTILITY. THE CITY OF DUBLIN AND THE CITY ENGINEER ASSUME NO RESPONSIBILITY FOR THE ACCURACY OR DEPTHS OF UNDERGROUND FACILITIES SHOWN ON THE PLANS. IF DAMAGE IS CAUSED, THE CONTRACTOR SHALL BE RESPONSIBLE FOR REPAIR OF THE SAME AND FOR ANY RESULTING CONTINGENT DAMAGE.

LOCATION, SUPPORT, PROTECTION, AND RESTORATION OF ALL EXISTING UTILITIES AND APPURTENANCES, SHOWN OR NOT SHOWN ON THE PLANS, SHALL BE THE RESPONSIBILITY OF THE CONTRACTOR. THE COST OF THIS WORK SHALL BE INCLUDED IN THE PRICES BID FOR THE VARIOUS ITEMS OF THE CONTRACT.

WHEN UNKNOWN OR INCORRECTLY LOCATED UNDERGROUND UTILITIES ARE ENCOUNTERED DURING CONSTRUCTION, THE CONTRACTOR SHALL IMMEDIATELY NOTIFY THE UTILITY OWNER AND THE CITY ENGINEER.

TRENCH AND BACKFILL

TRENCH EXCAVATION SHALL BE ADEQUATELY MAINTAINED AND PROTECTED WITH DRUMS OR BARRICADES AT ALL TIMES. PLACEMENT OF PROPOSED SUBBASE AND BASE MATERIAL SHALL FOLLOW AS CLOSELY AS POSSIBLE BEHIND EXCAVATION OPERATIONS. THE LENGTH OF OPEN TRENCH AT ANY ONE TIME SHALL BE HELD TO A MINIMUM AND SHALL AT ALL TIMES BE SUBJECT TO THE APPROVAL OF THE CITY ENGINEER.

ALL TRENCHES WITHIN PUBLIC RIGHT-OF-WAY SHALL BE BACKFILLED OR SECURELY PLATED DURING NON-WORKING HOURS. TRENCHES OUTSIDE THESE AREA SHALL BE BACKFILLED OR SHALL BE PROTECTED BY APPROVED TEMPORARY FENCING OR BARRICADES DURING NON-WORKING HOURS. CLEAN UP SHALL FOLLOW CLOSELY BEHIND THE TRENCHING OPERATION.

BACKFILL WITHIN A 1:1 INFLUENCE LINE OF EXISTING STRUCTURES (HOUSES, GARAGES, ETC.) OR PUBLIC INFRASTRUCTURE (PAVEMENTS, SIDEWALKS, CURBS, ETC.) SHALL BE ITEM 912, COMPACTED GRANULAR MATERIAL.

TRENCHES WITHIN 2 FEET OF PROPOSED PAVEMENT, CURB AND GUTTER, BERM, SHOULDERS, SIDEWALK, OR BIKE PATH, OR WHERE SPECIFICALLY CALLED FOR ON THE PLANS, SHALL BE BACKFILLED WITH COMPACTED GRANULAR MATERIAL ACCORDING TO ITEM 912 OF THE STANDARD SPECIFICATIONS.

GRANULAR BACKFILL SHALL BE COMPACTED GRANULAR MATERIAL ACCORDING TO ITEM 912 OF THE STANDARD SPECIFICATIONS. ITEM 912 MATERIAL SHALL CONSIST OF NATURAL, BROKEN, OR CRUSHED ROCK. SYNTHETIC OR MANMADE MATERIALS ARE UNACCEPTABLE.

THE CONTRACTOR SHALL BE RESPONSIBLE FOR THE CONDITION OF TRENCHES WITHIN THE RIGHT-OF-WAY AND PUBLIC EASEMENTS FOR A PERIOD OF ONE YEAR FROM THE FINAL ACCEPTANCE OF THE WORK, AND SHALL MAKE ANY NECESSARY REPAIRS AT NO COST TO THE CITY.

ITEM SPECIAL – TREE PROTECTION FENCE

ALL TREES WITHIN THE CONSTRUCTION AREA NOT DESIGNATED FOR REMOVAL, WHETHER SHOWN ON THE PLANS OR NOT, SHALL BE PRESERVED WITHOUT DAMAGE. TREES TO BE PRESERVED SHALL BE PROTECTED WITH HIGH VISIBILITY FENCING PLACED A MINIMUM OF 15 FEET FROM THE TREE TRUNK. TREES 6 INCHES OR GREATER AT DBH (DIAMETER BREAST HEIGHT) MUST BE PROTECTED WITH FENCING PLACED AT THE CRITICAL ROOT ZONE OR 15 FEET, WHICHEVER IS GREATER. WHERE 15 FEET CANNOT BE MAINTAINED, THE FENCING SHALL BE PLACED IN SUCH A WAY AS TO MAXIMIZE PROTECTION OF THE BRANCHES, TRUNK, AND ROOTS. A QUANTITY HAS BEEN INCLUDED IN THE GENERAL SUMMARY FOR SAID WORK.

TREES NOT INDICATED ON THE APPROVED CONSTRUCTION DRAWINGS FOR REMOVAL MAY NOT BE REMOVED WITHOUT PRIOR APPROVAL OF THE DIVISION OF ENGINEERING.

ITEM 201 – TREES OR STUMPS REMOVED

ALL TREES AND STUMPS SPECIFICALLY MARKED FOR REMOVAL WITHIN THE CONSTRUCTION LIMITS OF THIS PROJECT SHALL BE REMOVED UNDER ITEM 201, TREES OR STUMPS REMOVED.

THE FOLLOWING IS AN ESTIMATE OF THE NUMBER OF TREES AND STUMPS TO BE REMOVED:

SIZE	NO. OF TREES	NO. OF STUMPS
OVER 12"-24" (18" SIZE)	7	5
OVER 24"-36" (30" SIZE)	–	2
OVER 36"-60" (48" SIZE)	1	–

THE ABOVE TREE REMOVAL QUANTITIES ARE APPROXIMATE AND THE CITY OF DUBLIN RESERVES THE RIGHT TO ORDER THE REMOVAL OF ADDITIONAL TREES AND/OR STUMPS OUTSIDE THE LIMITS OF CONSTRUCTION BUT WITHIN THE RIGHT-OF-WAY AND/OR EASEMENT LINES.

TREE TRIMMING WITHIN THE CONSTRUCTION ZONE IS TO BE COMPLETED BY A CERTIFIED ARBORIST. AT THE COMPLETION OF THE PROJECT, THE ARBORIST IS TO RETURN AND TRIM ANY BROKEN BRANCHES AS NEEDED.

DRAINAGE

THE CONTRACTOR SHALL CONDUCT HIS OPERATIONS SO AS TO MAINTAIN AT ALL TIMES STORM SEWER, DRAIN, AND DITCH FLOWS THROUGH EXISTING FACILITIES TO REMAIN IN PLACE AND THROUGH EXISTING FACILITIES TO BE REPLACED UNTIL NEW FACILITIES ARE COMPLETED AND PUT INTO SERVICE. THE FLOW OF ALL STORM SEWER, DRAINS, AND OTHER WATERCOURSES ENCOUNTERED AND DISTURBED OR DESTROYED DURING CONSTRUCTION SHALL BE RESTORED BY THE CONTRACTOR TO A CONDITION SATISFACTORY TO THE CITY ENGINEER. PAYMENT FOR THIS SHALL BE INCLUDED IN THE PRICES BID FOR THE VARIOUS ITEMS OF THE CONTRACT.

ALL FIELD TILE BROKEN OR ENCOUNTERED DURING EXCAVATION SHALL BE REPLACED OR REPAIRED IN LIKE KIND AND CONNECTED TO THE STORM SEWER SYSTEM OR OPEN CHANNEL OUTLET, RESTORING NORMAL FUNCTION TO THE TILE, AS DIRECTED BY THE CITY ENGINEER. THE COST OF THIS WORK SHALL BE INCLUDED IN THE PRICES BID FOR THE VARIOUS ITEMS OF THE CONTRACT.

WHERE THE WORK CALLS FOR RELOCATION OF EXISTING DITCHES OR STORM SEWER, THE CONTRACTOR SHALL REESTABLISH THE OUTLETS OF ALL PRIVATE DRAINS ENCOUNTERED; SUCH AS DOWNSPOUTS, FOUNDATION DRAINS, CATCH BASINS, YARD DRAINS, ETC., INTO THE NEAREST NEW DITCH OR STORM SEWER. THE COST FOR REESTABLISHING PRIVATE DRAIN OUTLETS SHALL BE INCLUDED IN THE VARIOUS STORM SEWER ITEMS.

ITEM 601, ROCK CHANNEL PROTECTION, TYPE C WITH FILTER FABRIC SHALL BE PROVIDED AT THE OUTLET END OF STORM SEWERS AT THE LOCATIONS AND DIMENSIONS SHOWN ON THE PLANS. ITEM 601 MATERIALS SHALL CONSIST OF NATURAL, BROKEN, OR CRUSHED ROCK. BROKEN CONCRETE MATERIALS ARE UNACCEPTABLE. THE FILTER UNDERLYING ROCK CHANNEL PROTECTION BE FILTER FABRIC AS PER SECTION 601.09.

HDPE FLARED ENDS CALLED FOR ON THE PLANS SHALL BE ADVANCED DRAINAGE SYSTEMS (ADS) "FLARED END SECTIONS", OR APPROVED EQUAL, WITH THREADED RODS AND WING NUTS. N-12 ADAPTER FITTINGS FOR CONNECTION TO CONCRETE PIPE SHALL BE INCLUDED IN THE UNIT BID PRICE FOR THE FLARED END SECTIONS.

ALL STORM SEWERS SHALL BE REINFORCED CONCRETE PIPE CONFORMING TO ASTM DESIGNATION C76, WALL B, CLASS V FOR PIPE DIAMETERS 12 INCHES TO 15 INCHES, AND 18 INCHES AND LARGER PIPE SHALL BE CLASS III, UNLESS OTHERWISE SHOWN ON THE PLANS.

THE CONTRACTOR SHALL INCLUDE THE COST OF CONNECTION TO EXISTING STRUCTURES IN THE UNIT PRICE BID FOR THE VARIOUS 901 ITEMS. ALL MANHOLE CONNECTIONS SHALL BE MADE IN ACCORDANCE WITH THE PROVISIONS OF ITEM 604.

ALL INLETS, CATCH BASINS, AND MANHOLES SHALL BE CHANNELIZED.

ALL EXISTING AND PROPOSED CASTINGS SHALL BE ADJUSTED TO MATCH THE SURROUNDING FINISH GRADE BY THE CONTRACTOR. TOP OF CASTING ELEVATIONS PROVIDED ON THE PLANS ARE APPROXIMATE. PAYMENT UNDER ITEM 604, MANHOLES ADJUSTED TO GRADE, SHALL ONLY BE FOR CASTING ADJUSTMENTS ON EXISTING MANHOLES THAT REQUIRE NO OTHER WORK. THE COST OF ALL CASTING ADJUSTMENTS SHALL BE INCLUDED IN THE VARIOUS SEWER ITEMS.

WHERE BACKFILLING WITH CONCRETE AROUND A STORM SEWER PIPE IS DETERMINED TO BE NECESSARY, BY EITHER CALL OUT ON THE PLANS, OR AS DIRECTED BY THE ENGINEER, THE WORK SHALL BE IN ACCORDANCE WITH THE CITY OF COLUMBUS STANDARD DRAWING AA-S151, TYPE 1 BEDDING FOR RIGID SEWER PIPE USING CLASS "A" CONCRETE. THE TOTAL LENGTH OF BACKFILL SHALL BE FOR ALL EXPOSED PORTIONS OF PIPE, OR AS DIRECTED BY THE ENGINEER.

REVIEW OF DRAINAGE FACILITIES

BEFORE ANY WORK IS STARTED ON THE PROJECT AND AGAIN BEFORE FINAL ACCEPTANCE BY THE CITY, REPRESENTATIVES OF THE CITY AND THE CONTRACTOR SHALL MAKE AN INSPECTION OF ALL EXISTING SEWERS WHICH ARE TO REMAIN IN SERVICE AND WHICH MAY BE AFFECTED BY THE WORK. THE CONDITION OF THE EXISTING CONDUITS AND THEIR APPURTENANCES SHALL BE DETERMINED FROM FIELD OBSERVATIONS. RECORDS OF THE INSPECTION SHALL BE KEPT IN WRITING BY THE CITY.

ALL NEW CONDUITS, INLETS, CATCH BASINS, AND MANHOLES CONSTRUCTED AS A PART OF THE PROJECT SHALL BE FREE OF ALL FOREIGN MATTER AND IN A CLEAN CONDITION BEFORE THE PROJECT WILL BE ACCEPTED BY THE CITY.

ALL EXISTING SEWERS INSPECTED INITIALLY BY THE ABOVE MENTIONED PARTIES SHALL BE MAINTAINED AND LEFT IN A CONDITION REASONABLY COMPARABLE TO THAT DETERMINED BY THE ORIGINAL INSPECTION. ANY CHANGE IN THE CONDITION RESULTING FROM THE CONTRACTOR'S OPERATIONS SHALL BE CORRECTED BY THE CONTRACTOR TO THE SATISFACTION OF THE CITY ENGINEER.

PAYMENT FOR ALL INSPECTIONS, CLEANING, AND MAINTENANCE OF EXISTING AND NEW STORM SEWER DESCRIBED ABOVE SHALL BE INCLUDED IN THE CONTRACT PRICE FOR THE PERTINENT CONTRACT ITEMS.

CROSSINGS AND CONNECTIONS TO EXISTING PIPES AND UTILITIES

WHERE PLANS CALL FOR CONDUIT TO BE CONNECTED TO, OR CROSS OVER OR UNDER AN EXISTING SEWER OR UNDERGROUND UTILITY, THE CONTRACTOR SHALL LOCATE THE EXISTING PIPES OR UTILITIES FOR BOTH LINE AND GRADE BEFORE STARTING TO LAY THE PROPOSED CONDUIT.

IF IT IS DETERMINED THAT THE ELEVATION OF THE EXISTING CONDUIT OR EXISTING APPURTENANCE TO BE CONNECTED DIFFERS FROM THE PLAN ELEVATION, THE CITY ENGINEER SHALL BE NOTIFIED BEFORE STARTING CONSTRUCTION OF ANY PORTION OF THE PROPOSED CONDUIT WHICH WILL BE AFFECTED BY THE VARIANCE IN THE EXISTING ELEVATIONS.

IF IT IS DETERMINED THAT A PROPOSED CONDUIT WILL CONFLICT WITH AN EXISTING SEWER OR UNDERGROUND UTILITY WHEN CONSTRUCTED AS SHOWN ON THE PLAN, THE CITY ENGINEER SHALL BE NOTIFIED BEFORE STARTING CONSTRUCTION ON ANY PORTION OF THE PROPOSED CONDUIT WHICH WOULD BE AFFECTED BY THE CONFLICT.

PAYMENT FOR DETERMINATION OF LINE AND GRADE OF EXISTING UTILITIES AS REQUIRED SHALL BE INCLUDED IN THE CONTRACT PRICE FOR THE PERTINENT CONTRACT ITEMS.

ITEM 202 – CATCH BASIN ABANDONED, AS PER PLAN

THIS ITEM SHALL CONSIST OF REMOVAL OF THE CASTING AND UPPER PORTION OF THE EXISTING CATCH BASIN. THE CONTRACTOR SHALL REPLACE WITH A NEW PRECAST SOLID CONCRETE TOP THAT IS TRAFFIC RATED FOR A VEHICLE LOAD. IT IS ANTICIPATED THAT THE EXISTING STRUCTURE'S SUMP SECTION AND STORM SEWER PIPE(S) SHALL NOT BE DISTURBED.

ALL MATERIALS, LABOR AND EQUIPMENT NECESSARY TO PERFORM THE ABOVE WORK SHALL BE INCLUDED IN THE UNIT PRICE BID FOR ITEM 202, CATCH BASIN ABANDONED, AS PER PLAN.

ITEM 604 – CATCH BASIN (AA-S133A) WITH BIKE SAFE GRATE

BICYCLE SAFE GRATES SHALL BE USED FOR ALL PROPOSED CATCH BASINS. ALL CATCH BASINS ARE TO BE EQUIPPED WITH EAST JORDAN #5110, TYPE M3 GRATES.

AMERICANS WITH DISABILITIES ACT (ADA)
ITEM 608 – CURB RAMP, AS PER PLAN
ITEM 608 – DETECTABLE WARNING, AS PER PLAN

ALL SIDEWALKS, PEDESTRIAN PATHS, CURB RAMPS, AND DRIVEWAYS SHALL BE CONSTRUCTED IN ACCORDANCE WITH THE LATEST STANDARDS OF THE AMERICANS WITH DISABILITIES ACT ACCESSIBILITY GUIDELINES FOR BUILDINGS AND FACILITIES (ADAGG).

THE ELEVATIONS AND SLOPES PROVIDED ON THE DRAWINGS ARE INTENDED TO CONVEY A DESIGN THAT IS COMPATIBLE WITH ADA GUIDELINES. THE CONTRACTOR SHALL DETERMINE THE EXISTING ELEVATIONS OF ADJACENT NEW OR EXISTING CONCRETE CURB AND ADJACENT NEW OR EXISTING WALK PRIOR TO THE START OF RAMP CONSTRUCTION. ADJUSTMENTS IN GRADE SHALL BE MADE BY THE CONTRACTOR BASED ON THE ELEVATION INFORMATION TO INSURE THAT THE FINISHED WORK IS IN ACCORDANCE WITH ADA GUIDELINES.

DETECTABLE WARNINGS SHALL BE PROVIDED WHEREVER A CURB RAMP CROSSES A VEHICULAR WAY, EXCLUDING DRIVEWAYS, IN ACCORDANCE WITH DUBLIN STANDARD DRAWING PD-03. ALL DETECTABLE WARNINGS SHALL BE ADA SOLUTIONS TACTILE WARNING SURFACE MATS – REPLACEABLE WET-SET COMPOSITE TACTILE WITH A DOME SPACING OF 2.35 INCHES, MANUFACTURER PART NUMBER 2448REP. BRICK RED COLOR SHALL BE USED IN MOST LOCATIONS UNLESS OTHERWISE NOTED. THE COST OF THIS WORK WILL BE PAID AT THE UNIT PRICE BID PER EACH, AND SHALL BE IN ADDITION TO ANY OVERLAPPING PAYMENTS PER SQUARE FOOT FOR SIDEWALK OR SHARED-USE PATH.

ITEM 608 – 4" CONCRETE WALK, AS PER PLAN

IN ADDITION TO THE CONCRETE WALK, THE CONTRACTOR SHALL SHAPE AND UNIFORMLY COMPACT THE SUBGRADE TO A SURFACE CONFORMING TO THE PLANS AND THE REQUIREMENTS OF ITEM 204 AND PLACE A 4" BASE OF #57 CRUSHED AGGREGATE THE FULL WIDTH OF THE WALK. THE COST OF THIS WORK SHALL BE INCLUDED IN THE PRICE BID FOR ITEM 608, 4" CONCRETE WALK, AS PER PLAN.

ITEM 609 – 6" CONCRETE COMBINATION CURB AND GUTTER, AS PER PLAN

THE 6" CONCRETE COMBINATION CURB AND GUTTER SHALL BE IN ACCORDANCE WITH CITY OF DUBLIN STANDARD DRAWING RD-02.

WHERE THESE ITEMS ARE TO BE PLACED WITHIN OR ADJACENT TO EXISTING PAVEMENT, THE PAVEMENT SHALL BE SAWCUT, REMOVED AND REPLACED IN ACCORDANCE WITH THE PLAN LOCATIONS AND DETAILS. THE COST OF ALL LABOR, MATERIALS, AND EQUIPMENT REQUIRED TO SAWCUT, REMOVE AND REPLACE THE AFFECTED EXISTING PAVEMENT AREA SHALL BE INCLUDED IN THE CONTRACT UNIT PRICE FOR THE PERTINENT 609 ITEM.

ITEM SPECIAL – LIMESTONE STEPS

THE CONTRACTOR SHALL PLACE FIVE (5) LIMESTONE STEPS, CENTERED AT ℄ "C" STA. 2+69.5 LT.

THE LIMESTONE STEPS SHALL BE 5' WIDE, 1' DEEP, AND 4" TALL. SLOPE STEP TREADS AT A RATE OF 1.56% (3/16" PER FOOT) AND TOWARD THE NEXT LOWER STEP.

LIMESTONE STEPS SHALL BE MEASURED BY THE NUMBER OF FEET ALONG THE FRONT EDGE OF EACH TREAD.

ITEM 202 – GUARDRAIL REMOVED AND RESET, AS PER PLAN

A QUANTITY OF ITEM 202, GUARDRAIL REMOVED AND RESET, AS PER PLAN HAS BEEN INCLUDED IN THE GENERAL SUMMARY FOR USE AS DIRECTED BY THE ENGINEER.

THIS ITEM OF WORK SHALL CONSIST OF REMOVAL AND RESETTING OF EXISTING TIMBER GUARDRAIL ALONG THE WEST SIDE OF MUIRFIELD DRIVE ADJACENT TO THE BRIDGE OVER NORTH FORK INDIAN RUN, IF DEEMED NECESSARY TO ACCOMMODATE CONSTRUCTION OF THE PROPOSED PEDESTRIAN BRIDGE FOUNDATIONS, PAYMENT SHALL BE MADE AT THE UNIT PRICE BID PER FOOT AND SHALL INCLUDE ALL LABOR, EQUIPMENT AND MATERIALS REQUIRED TO CAREFULLY REMOVE EXISTING TIMBER RAIL AND WOOD POSTS, RESET WOOD POSTS, AND REINSTALL TIMBER RAILING IN THE SAME LOCATION AND MANNER AS IT EXISTED PRIOR TO REMOVAL.

ITEM 653 – TOPSOIL FURNISHED AND PLACED, AS PER PLAN

A MINIMUM 3 INCHES OF TOPSOIL SHALL BE PLACED IN ALL AREAS TO BE SEEDED. PRIOR TO PLACING TOPSOIL IN CUT AREAS, THE EARTH SHALL BE EXCAVATED TO A DEPTH SUFFICIENT TO PLACE 3 INCHES OF TOPSOIL. THE COST OF EXCAVATION AND DISPOSAL OF SURPLUS MATERIALS WILL NOT BE PAID FOR SEPARATELY, BUT SHALL BE INCLUDED IN THE COST OF THE VARIOUS CONTRACT ITEMS.

TOPSOIL SHALL BE REMOVED AND WASTED OR UTILIZED IN NON–LOAD BEARING FILLS IN ACCORDANCE WITH THE SPECIFICATIONS. NO EXTRA COMPENSATION SHALL BE PAID FOR THE REMOVAL OF EXCESS TOPSOIL AS REQUIRED TO OBTAIN A SUITABLE SUBGRADE. PAYMENT FOR TOPSOIL REMOVAL IS INCLUDED IN ITEM 203, EXCAVATION.

ALL TOPSOIL MATERIALS AND FINAL AREA OF SUBGRADE PREPARATION SHALL BE FREE FROM ROCK AND OTHER FOREIGN MATERIAL OF 1/2" OR GREATER IN ANY DIMENSION.

ITEM 659 – SEEDING AND MULCHING, AS PER PLAN

SEED: CERTIFICATION OF GRASS SEED SHALL BE PROVIDED BY SEED VENDOR FOR EACH GRASS–SEED MIXTURE STATING THE BOTANICAL AND COMMON NAME, PERCENTAGE BY WEIGHT OF EACH SPECIES AND VARIETY; AND PERCENTAGE OF PURITY, GERMINATION, AND WEED SEED. INCLUDE THE YEAR OF PRODUCTION AND DATE OF PACKAGING. FURNISH NATIONAL TURFGRASS EVALUATION PROGRAM (NTEP) DATA FOR EACH SPECIES TO BE USED.

GRASS SEED MUST BE FRESH, CLEAN, DRY, NEW–CROP SEED COMPLYING WITH THE A.O.S.A. "JOURNAL OF SEED TECHNOLOGY" RULES FOR TESTING SEEDS FOR PURITY AND GERMINATION TOLERANCES.

SEED SPECIES SHALL BE AS FOLLOWS, WITH NOT LESS THAN **90 PERCENT** GERMINATION, NOT LESS THAN **98 PERCENT** PURE SEED, AND NOT MORE THAN 0.5 PERCENT WEED SEED.

TURFGRASS SEED MIX PROPORTIONED BY WEIGHT:

A. 80 PERCENT TALL FESCUE (FESTUCA ARUNDINACEA), WITH A MINIMUM OF 3 IMPROVED TURF–TYPE VARIETIES. KENTUCKY–31 AND ALTA VARIETIES ARE NOT APPROVED.
B. 20 PERCENT PERENNIAL RYEGRASS (LOLIUM PERENNE).

SEEDING: SOW SEED AT A TOTAL RATE OF 7–9 LB. / 1,000 S.F. WITH A SPREADER OR SEEDING MACHINE. RAKE SEED LIGHTLY INTO TOP 1/8 INCH OF SOIL, ROLL LIGHTLY, AND WATER WITH FINE SPRAY. THOROUGHLY COVER WITH STRAW AND TACK. TACK SHALL BE ADEQUATE TO PREVENT THE STRAW FROM BEING BLOWN AWAY.

PROTECT SEEDED AREAS WITH SLOPES EXCEEDING 3:1 WITH EROSION CONTROL BLANKETS AS DIRECTED BY THE ENGINEER. COST OF EROSION CONTROL BLANKETS, MATERIAL, AND LABOR SHALL BE PAID FOR BY THE CITY.

HYDRO–SEEDING: NOT PERMITTED.

HYDRO–MULCHING: NOT PERMITTED.

TURF MAINTENANCE: MAINTAIN AND ESTABLISH TURF BY WATERING, FERTILIZING, WEEDING, MOWING, TRIMMING, AND REPLANTING TO ESTABLISH HEALTHY, VIABLE TURF. ROLL, REGRADE, AND REPLANT BARE OR ERODED AREAS AND REMULCH TO PRODUCE A UNIFORMLY SMOOTH TURF. PROVIDE THE SAME MATERIALS AND INSTALLATION AS THOSE USED IN THE ORIGINAL INSTALLATION. WATER TURF WITH FINE SPRAY AT A MINIMUM RATE OF 1 INCH PER WEEK UNLESS RAINFALL PRECIPITATION IS ADEQUATE.

MOW TURFGRASS SEED MIX AREAS AS SOON AS TOP GROWTH IS TALL ENOUGH TO CUT. REPEAT MOWING TO MAINTAIN SPECIFIED HEIGHT WITHOUT CUTTING MORE THAN 1/3 OF GRASS HEIGHT. MOW AREAS TO A HEIGHT OF 2 TO 3 INCHES.

WATER LINES

THE CITY OF COLUMBUS CONSTRUCTION AND MATERIAL SPECIFICATIONS, 2012 EDITION, INCLUDING ALL SUPPLEMENTS THERETO, SHALL GOVERN ALL CONSTRUCTION ITEMS THAT ARE A PART OF THIS PLAN, UNLESS OTHERWISE NOTED.

ALL WATER MAIN MATERIALS AND INSTALLATIONS SHALL BE IN ACCORDANCE WITH THE CURRENT RULES AND REGULATIONS OF THE CITY OF COLUMBUS, DIVISION OF WATER.

ALL BRASS FITTINGS ASSOCIATED WITH WATER WORK, INCLUDING REPAIRS TO THE EXISTING SYSTEM, SHALL CONFORM TO THE REVISED ALLOWABLE LEAD EXTRACTION LIMIT PER UPDATED NSF/ANSI 61 STANDARD. THE DIVISION OF WATER'S APPROVED MATERIALS LIST HAS BEEN UPDATED TO REFLECT THIS REQUIREMENT.

IT SHALL BE UNLAWFUL FOR ANY PERSON TO PERFORM ANY WORK ON CITY OF COLUMBUS WATER LINE SYSTEMS WITHOUT FIRST SECURING LICENSE TO ENGAGE IN SUCH WORK, AS INDICATED IN COLUMBUS CITY CODE SECTION 1103.02 AND 1103.06. THIS WORK INCLUDES ANY ATTACHMENTS, ADDITIONS TO OR ALTERATIONS IN ANY CITY SERVICE PIPE OR APPURTENANCES (INCLUDING WATER SERVICE LINES AND TAPS). THIS REQUIREMENT MAY BE MET BY UTILIZATION OF A SUBCONTRACTOR WHO HOLDS A CITY OF COLUMBUS WATER CONTRACTOR LICENSE OR A COMBINED WATER/SEWER CONTRACTOR LICENSE TO PERFORM THIS WORK. UTILIZATION OF A SUBCONTRACTOR MUST MEET THE LICENSING REQUIREMENTS OF CITY OF COLUMBUS BUILDING CODE, IN PARTICULAR SECTION 4114.119 AND 4114.529.

WATER SERVICE BOXES SHALL BE PLACED 1' FROM THE EDGE OF THE PROPOSED OR EXISTING SIDEWALK BETWEEN THE SIDEWALK AND THE CURB, OR 2 FEET INSIDE THE RIGHT–OF–WAY OR EASEMENT LINE WHEN NO SIDEWALK IS PRESENT OR PROPOSED. REFER TO STANDARD DRAWING L–9901 FOR ADDITIONAL INFORMATION.

THE CONTRACTOR SHALL ADJUST ALL EXISTING VALVE BOXES TO FINAL GRADE IN BOTH PAVEMENT AND NON–PAVEMENT AREAS IN ACCORDANCE WITH ITEM 807.

ALL NEW AND EXISTING VALVES LOCATED WITHIN THE PROPOSED SHARED–USE PATH PAVEMENT AREA SHALL HAVE COLUMBUS STANDARD HEAVY DUTY VALVE BOXES IN ACCORDANCE WITH ITEM 807. EACH NEW OR REPLACEMENT HEAVY DUTY BOX WILL BE PAID FOR SEPARATELY AT THE PRICE BID PER EACH.

ITEM SPECIAL – SURVEY COORDINATES

"SURVEY COORDINATES" SHALL INCLUDE ALL MATERIAL, EQUIPMENT, AND LABOR NECESSARY TO OBTAIN HORIZONTAL AND VERTICAL (NORTHING, EASTING, AND ELEVATION) SURVEY COORDINATES FOR THE WATER MAIN IMPROVEMENTS. THE SURVEY COORDINATES SHALL BE OBTAINED FOR THE COMPLETED WATER MAIN CONSTRUCTION AND SHALL INCLUDE ALL VALVES, TEES, CROSSES, BENDS, DEFLECTIONS, PLUGS, REDUCERS, TAPPING SLEEVES, BLOW OFFS, CHLORINATION TAPS, FIRE HYDRANTS, AIR RELEASES, CURB STOPS, CASING PIPE TERMINI, AND OTHER FITTINGS. ADDITIONAL SURVEY COORDINATES ARE REQUIRED ON THE WATER MAIN EVERY 500 FEET WHERE NO FITTING OR OTHER WATER MAIN STRUCTURE IS BEING INSTALLED WITHIN THAT LENGTH OF THE IMPROVEMENT.

ALL SURVEY COORDINATES SHALL BE REFERENCED TO THE APPLICABLE COUNTY ENGINEER'S MONUMENTS, AND SHALL BE BASED ON THE NORTH AMERICAN DATUM OF 1983 (NAD 83) WITH THE (NSRS2007) ADJUSTMENT, WITH FURTHER REFERENCE MADE TO THE OHIO STATE PLANE SOUTH COORDINATE SYSTEM, SOUTH ZONE, WITH ELEVATIONS BASED ON NAVD 88 DATUM. ALL COORDINATES (NORTHING, EASTING, ELEVATION) SHALL BE REFERENCED TO THE NEAREST HUNDREDTH (N XXXXXX.XX, E XXXXXX.XX, ELEV. XXX.XX). ALL SURVEY COORDINATES SHALL BE ACCURATE TO WITHIN 1.0 FOOT HORIZONTAL AND A TENTH OF A FOOT (0.10) OR LESS VERTICAL.

THE COORDINATES SHALL BE DOCUMENTED TO THE MUNICIPALITY ENGINEER OR DESIGNATED REPRESENTATIVE IN DIGITAL SPREADSHEET FORM AND SHALL INCLUDE THE APPLICABLE ITEM, STATION, NORTHING, EASTING, AND ELEVATION. COORDINATES SHALL BE SUBMITTED TO THE MUNICIPALITY ENGINEER OR DESIGNATED REPRESENTATIVE ON A BI–WEEKLY BASIS. COORDINATES SHALL ALSO BE REQUIRED TO BE SUBMITTED TO THE DIVISION OF WATER AS PART OF THE REQUEST FOR CHLORINATION.

LUMP SUM PAYMENT IS FULL COMPENSATION FOR ALL WORK INVOLVED IN OBTAINING AND DOCUMENTING THE SURVEY COORDINATES AS DESCRIBED IN THIS SPECIFICATION.

					AS-BUILT		
WATER ITEM	STA.	OFFSET	NORTHING	EASTING	NORTHING	EASTING	C/L ELEV.
℄ "A"							
VALVE ATG	8+00.62	5.12' RT.	775214.98	1787530.35			
VALVE ATG	8+02.52	2.92' RT.	775216.79	1787532.63			
VALVE ATG	8+57.96	1.87' LT.	775211.29	1787588.00			
VALVE ATG W/ HD BOX	11+60.84	0.47' LT.	775154.10	1787885.44			
VALVE ATG	11+71.37	7.49' RT.	775144.34	1787894.32			
VALVE ATG W/ HD BOX	14+12.01	6.50' RT.	775100.98	1788131.02			
FH LOWERING	17+66.04	10.12' LT.	775032.59	1788478.41			
FH LOWERING	23+81.50	2.69' LT.	774725.46	1789000.45			
VALVE ATG W/ HD BOX	23+81.77	1.70' RT.	774722.05	1788997.66			
VALVE ATG	24+17.81	6.96' RT.	774693.72	1789020.55			
VALVE ATG W/ HD BOX	26+53.69	5.58' RT.	774534.72	1789194.91			
VALVE ATG W/ HD BOX	29+78.76	2.25' RT.	774320.16	1789439.14			
VALVE ATG W/ HD BOX	32+06.93	4.52' RT.	774185.70	1789622.85			
VALVE ATG W/ HD BOX	32+84.76	0.06' RT.	774150.49	1789692.41			
VALVE ATG	35+84.45	1.90' RT.	773996.97	1789949.53			
VALVE ATG W/ HD BOX	38+82.75	8.76' RT.	773818.00	1790186.35			
VALVE ATG W/ HD BOX	41+21.51	4.40' RT.	773655.19	1790361.04			
VALVE ATG W/ HD BOX	41+76.58	3.62' RT.	773617.47	1790401.17			
FH EXTENSION	41+76.77	3.83' LT.	773622.70	1790406.48			
VALVE ATG W/ HD BOX	42+20.04	5.74' RT.	773585.74	1790430.95			

CALCULATED LMO
CHECKED KJG

GENERAL NOTES

BRAND ROAD
SHARED-USE PATH

GENERAL NOTES

1. A DETAILED TEMPORARY AND PERMANENT EROSION CONTROL PLAN MUST BE SUBMITTED TO THE CITY ENGINEER FOR APPROVAL BEFORE CONSTRUCTION IF ONE IS NOT INCLUDED IN THE PLANS. THE DESIGN OF EROSION CONTROL SYSTEMS SHALL FOLLOW THE REQUIREMENTS OF OHIO EPA, ITEM 207 OF OHIO DEPARTMENT OF TRANSPORTATION (ODOT) STANDARD SPECIFICATIONS, AND THE CITY ENGINEER. THE CONTRACTOR SHALL BE CONSIDERED THE DEVELOPER OF THE STORMWATER DISCHARGE.

2. THE CONTRACTOR SHALL PROVIDE SEDIMENT CONTROL AT ALL POINTS WHERE WATER LEAVES THE PROJECT, INCLUDING WATERWAYS, OVERLAND SHEET FLOW, AND STORM SEWERS, WHETHER SPECIFICALLY SHOWN ON THE PLANS OR NOT.

3. ACCEPTED METHODS OF PROVIDING EROSION/SEDIMENT CONTROL INCLUDE BUT ARE NOT LIMITED TO: SEDIMENT FILTERS, SILT FILTER FENCE, ROCK CHECK DAMS, AND TEMPORARY GROUND COVER.

4. THE CONTRACTOR SHALL PROVIDE ADEQUATE DRAINAGE OF THE WORK AREA AT ALL TIMES CONSISTENT WITH EROSION CONTROL PRACTICES.

5. DISTURBED AREAS THAT WILL REMAIN UNWORKED FOR 45 DAYS OR MORE SHALL BE SEEDED WITHIN 7 CALENDAR DAYS OF THE DISTURBANCE. OTHER SEDIMENT CONTROLS THAT ARE INSTALLED SHALL BE MAINTAINED UNTIL VEGETATIVE GROWTH HAS BEEN ESTABLISHED. THE CONTRACTOR SHALL BE RESPONSIBLE FOR THE REMOVAL OF ALL TEMPORARY SEDIMENT DEVICES AT THE CONCLUSION OF CONSTRUCTION BUT NOT BEFORE GROWTH OF PERMANENT GROUND COVER.

6. ALL DENUDED AREAS, INCLUDING STOCKPILED TOPSOIL AND EXCAVATED MATERIAL, ARE TO BE PROTECTED THROUGH THE USE OF TEMPORARY SEEDING, OR COVERED WITH ANCHORED STRAW MULCH.

7. FINAL GRADING WILL BE CONSISTENT WITH PRECONSTRUCTION TOPOGRAPHY TO MAINTAIN DRAINAGE AND AESTHETICS.

8. REMOVE ONLY THE TREES, SHRUBS, AND GRASSES THAT MUST BE REMOVED TO PERMIT ACTUAL CONSTRUCTION. PROTECT THE REMAINING TO PRESERVE THEIR AESTHETIC AND EROSION CONTROL VALUE.

9. BACKFILL TRENCHES IMMEDIATELY AFTER USE. SEED AND MULCH TRENCH AREA WITHIN 2 WEEKS AFTER AREA OR SECTION HAS BEEN OPENED.

10. SETTLING FACILITIES, SEDIMENT FILTERS, PERIMETER CONTROLS, AND OTHER PRACTICES INTENDED TO TRAP SEDIMENT SHALL BE IMPLEMENTED AS THE FIRST STEP OF GRADING OR CONSTRUCTION AND WITHIN 7 DAYS FROM THE START OF GRUBBING. THEY SHALL CONTINUE TO FUNCTION UNTIL THE UPSLOPE DEVELOPMENT AREA IS RESTABILIZED.

11. STORM SEWER INLET PROTECTION – ALL STORM SEWER INLETS WHICH ACCEPT WATER RUNOFF FROM THE PROJECT AREA SHALL BE PROTECTED SO THAT SEDIMENT–LADEN WATER WILL NOT ENTER THE STORM SEWER SYSTEM WITHOUT FIRST BEING FILTERED OR OTHERWISE TREATED TO REMOVE SEDIMENT, UNLESS THE STORM SEWER SYSTEM DRAINS TO A SETTLING FACILITY. THESE CONTROLS SHALL BE SELECTED AND LOCATED AS INDICATED IN THE PLANS AND AS DIRECTED BY THE CITY ENGINEER.

12. WORKING IN OR CROSSING STREAMS – STREAMS INCLUDING BED AND BANKS SHALL BE RESTABILIZED IMMEDIATELY AFTER IN–CHANNEL WORK IS COMPLETED, INTERRUPTED, OR STOPPED. TO THE EXTENT PRACTICABLE, CONSTRUCTION VEHICLES SHALL BE KEPT OUT OF STREAMS. WHERE IN–CHANNEL WORK IS NECESSARY, PRECAUTIONS SHALL BE TAKEN TO STABILIZE THE WORK AREA DURING CONSTRUCTION TO MINIMIZE EROSION. WHERE A STREAM MUST BE CROSSED BY CONSTRUCTION VEHICLES REGULARLY DURING CONSTRUCTION, A TEMPORARY CULVERT SHALL BE PROVIDED.

13. CONSTRUCTION ACCESS ROUTES – MEASURES SHALL BE TAKEN TO PREVENT SOIL TRANSPORT ONTO SURFACES WHERE RUNOFF IS NOT CHECKED BY SEDIMENT CONTROLS, OR ONTO PUBLIC ROADS. THE CONTRACTOR SHALL BE RESPONSIBLE TO ENSURE THAT OFF–SITE TRACKING OF SEDIMENTS BY VEHICLES AND EQUIPMENT IS ELIMINATED.

14. SLOUGHING AND DUMPING – NO SOIL, ROCK, DEBRIS, OR ANY OTHER MATERIAL SHALL BE DUMPED OR PLACED INTO A WATER RESOURCE OR INTO SUCH PROXIMITY THAT IT MAY READILY SLOUGH, SLIP, OR ERODE INTO A WATER RESOURCE UNLESS SUCH DUMPING OR PLACING IS AUTHORIZED BY THE CITY ENGINEER. UNSTABLE SOILS PRONE TO SLIPPING OR LANDSLIDING SHALL NOT BE GRADED, EXCAVATED, FILLED, OR HAVE LOADS IMPOSED UPON THEM UNLESS THE WORK IS DONE IN ACCORDANCE WITH A QUALIFIED PROFESSIONAL ENGINEER'S RECOMMENDATIONS TO CORRECT, ELIMINATE, OR ADEQUATELY ADDRESS THE PROBLEMS.

15. MAINTENANCE AND INSPECTION – ALL TEMPORARY AND PERMANENT EROSION AND SEDIMENT CONTROL PRACTICES SHALL BE DESIGNED AND CONSTRUCTED TO MINIMIZE MAINTENANCE REQUIREMENTS. THEY SHALL BE MAINTAINED AND REPAIRED AS NEEDED TO ENSURE CONTINUED PERFORMANCE OF THEIR INTENDED FUNCTION. MAINTENANCE AND INSPECTION OF ALL EROSION/SEDIMENT CONTROL DEVICES REQUIRED BY THE CITY ENGINEER SHALL BE THE SOLE RESPONSIBILITY OF THE CONTRACTOR. INSPECTIONS SHALL BE PERFORMED BY THE CONTRACTOR IN THE PRESENCE OF THE CITY ENGINEER, ONCE EVERY 7 CALENDAR DAYS AND/OR WITHIN 24 HOURS AFTER A RAIN EVENT OF GREATER THAN 0.5 INCHES IN A 24–HOUR PERIOD. THESE INSPECTIONS SHALL IDENTIFY AREAS CONTRIBUTING TO STORMWATER DISCHARGES ASSOCIATED WITH THE PROJECT; EVALUATE THE ADEQUACY, IMPLEMENTATION, AND MAINTENANCE OF EXISTING AND PROPOSED EROSION/SEDIMENTATION MEASURES; AND DETERMINE WHETHER ADDITIONAL MEASURES ARE REQUIRED. ACCEPTABLE INSPECTION REPORTS SHALL BE PREPARED BY THE CONTRACTOR AND SUBMITTED TO THE CITY ENGINEER WITHIN 48 HOURS OF INSPECTION COMPLETION. THE REPORT SHALL CONTAIN THE RESULTS OF THE INSPECTION, NAME(S) AND QUALIFICATIONS OF PERSONNEL MAKING THE INSPECTION, MAJOR OBSERVATIONS RELATING TO THE IMPLEMENTATION OF THE TEMPORARY EROSION AND SEDIMENT CONTROL PLAN, A CERTIFICATION THAT THE FACILITY IS IN COMPLIANCE WITH THE PLAN, AND IDENTIFYING ANY INCIDENTS OF NONCOMPLIANCE.

16. OUTFLOWS FROM DEWATERING OPERATIONS – ALL WATER PRODUCED FROM CLEANING AND DEWATERING OPERATIONS, WHETHER SPECIFICALLY FROM TRENCH DEWATERING OPERATIONS OR FROM MORE EXTENSIVE DEWATERING OPERATIONS, SHALL BE DISCHARGED IN SUCH A MANNER AS TO ELIMINATE EROSION FROM SUCH DISCHARGE.

17. ADDITIONAL CONTROLS – THE CONTRACTOR SHALL ENSURE THAT NO SEDIMENTS ARE TRACKED OFF–SITE BY CONSTRUCTION EQUIPMENT, VEHICLES, AND WORKERS. THE CONTRACTOR SHALL ALSO ENSURE THAT NO SOLID OR LIQUID WASTE IS DISCHARGED INTO ANY STORMWATER FLOW.

18. TEMPORARY EROSION AND SEDIMENT CONTROL PLAN AVAILABILITY AND UPDATES – THE CONTRACTOR SHALL BE SOLELY RESPONSIBLE TO ENSURE THE IMMEDIATE AVAILABILITY OF THE TEMPORARY EROSION AND SEDIMENT CONTROL PLAN ON–SITE. THE CONTRACTOR SHALL ALSO BE SOLELY RESPONSIBLE TO PERFORM ALL UPDATES AND ADJUSTMENTS TO THE TEMPORARY EROSION AND SEDIMENT CONTROL PLAN.

TEMPORARY EROSION AND SEDIMENT CONTROL

THE FOLLOWING ESTIMATED QUANTITY IS TO BE USED AS DIRECTED BY THE CITY ENGINEER FOR TEMPORARY EROSION AND SEDIMENT CONTROL MEASURES:

ITEM 207, INLET PROTECTION	20 EACH
ITEM 207, PERIMETER FILTER FABRIC FENCE	500 FT

PROHIBITED CONSTRUCTION ACTIVITIES

THE CONTRACTOR SHALL NOT USE CONSTRUCTION PROCEDURES, ACTIVITIES, OR OPERATIONS THAT MAY UNNECESSARILY IMPACT THE NATURAL ENVIRONMENTAL OR THE PUBLIC HEALTH AND SAFETY. PROHIBITED CONSTRUCTION PROCEDURES, ACTIVITIES, OR OPERATIONS INCLUDE, BUT ARE NOT LIMITED TO, THE FOLLOWING:

1. DISPOSING OF EXCESS OR UNSUITABLE EXCAVATED MATERIAL IN WETLANDS OR FLOOD PLAINS, EVEN WITH THE PERMISSION OF THE PROPERTY OWNER.

2. INDISCRIMINATE, ARBITRARY, OR CAPRICIOUS OPERATION OF EQUIPMENT IN ANY STREAM CORRIDORS, ANY WETLANDS, ANY SURFACE WATERS, OR OUTSIDE THE EASEMENT LIMITS.

3. PUMPING OF SEDIMENT LADEN WATER FROM TRENCHES OR OTHER EXCAVATIONS INTO ANY SURFACE WATERS, ANY STREAM CORRIDORS, ANY WETLANDS, OR STORM DRAINS.

4. DISCHARGING POLLUTANTS SUCH AS CHEMICALS, FUELS, LUBRICANTS, BITUMINOUS MATERIALS, RAW SEWAGE, AND/OR ANY OTHER HARMFUL WASTE, INTO OR ALONGSIDE OF RIVERS, STREAMS, IMPOUNDMENTS, OR INTO NATURAL OR MAN–MADE CHANNELS LEADING THERETO.

5. PERMANENT OR UNSPECIFIED ALTERATION OF THE FLOWLINE OF A STREAM.

6. DAMAGING VEGETATION OUTSIDE OF THE CONSTRUCTION AREA.

7. DISPOSAL OF TREES, BRUSH, AND OTHER DEBRIS IN ANY STREAM CORRIDORS, WETLANDS, OR SURFACE WATERS.

8. OPEN BURNING OF PROJECT DEBRIS WITHOUT A PERMIT.

9. STORING CONSTRUCTION EQUIPMENT AND VEHICLES AND/OR STOCKPILING CONSTRUCTION MATERIALS ON PROPERTY (PUBLIC OR PRIVATE) NOT PREVIOUSLY SPECIFIED BY THE CITY ENGINEER FOR SAID PURPOSES.

EROSION CONTROL DETAILS

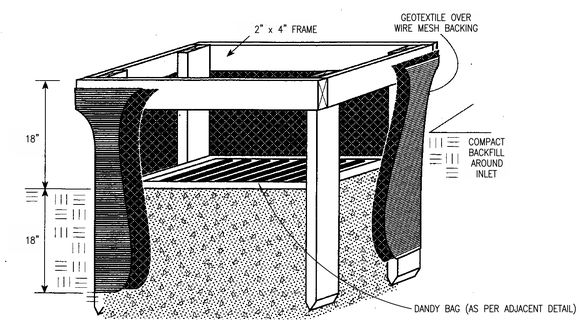

1. Inlet protection shall be constructed either before upslope land disturbance begins or before the storm drain becomes operational.

2. The earth around the inlet shall be excavated completely to a depth at least 18 in.

3. The wooden frame shall be constructed of 2-by-4-in. construction-grade lumber. The 2-by-4-in. posts shall be driven 1 ft. into the ground at four corners of the inlet and the top portion of 2-by-4-in. frame assembled using the overlap joint shown. The top of the frame shall be at least 6 in. below adjacent roads if ponded water would pose a safety hazard to traffic.

4. Wire mesh shall be of sufficient strength to support fabric with water fully impounded against it. It shall be stretched tightly around the frame and fastened securely to the frame.

5. Geotextile shall have an equivalent opening size of 20-40 sieve and be resistant to sunlight. It shall be stretched tightly around the frame and fastened securely. It shall extend from the top of the frame to 18 in. below the inlet notch elevation. The geotextile shall overlap across one side of the inlet so the ends of the cloth are not fastened to the same post.

6. Backfill shall be placed around the inlet in compacted 6-in. layers until the earth is even with notch elevation on ends and top elevation on sides.

7. A compacted earth dike or a check dam shall be constructed in the ditch line below the inlet if the inlet is not in a depression and if runoff bypassing the inlet will not flow to a settling pond. The top of earth dikes shall be at least 6 in. higher than the top of the frame.

INLET PROTECTION DETAIL

FOR CATCH BASINS

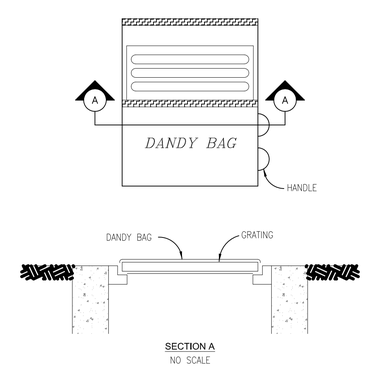

INSTALLATION: STAND GRATE ON END. PLACE DANDY BAG OVER GRATE. FLIP GRATE OVER SO THAT OPEN END IS UP. PULL UP SLACK. TUCK FLAP IN. BE SURE END OF GRATE IS COMPLETELY COVERED BY FLAP OR DANDY BAG WILL NOT FIT PROPERLY. HOLDING HANDLES, CAREFULLY PLACE DANDY BAG WITH GRATE INSERTED INTO CATCH BASIN FRAME SO THAT RED DOT ON THE TOP OF THE DANDY BAG IS VISIBLE.

MAINTENANCE: AFTER SILT HAS DRIED, REMOVE IT FROM THE SURFACE OF DANDY BAG WITH BROOM.

DANDY BAG DETAIL

FOR CATCH BASINS

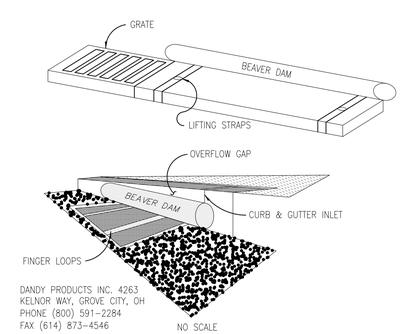

INSTALLATION: STAND GRATE ON END. SLIDE THE BEAVER DAM BAG ON WITH DAM ON TOP OF GRATE. PULL ALL EXCESS DOWN. LAY UNIT ON ITS SIDE. CAREFULLY TUCK FLAP IN. PRESS VELCRO STRIPS TOGETHER. INSTALL THE UNIT MAKING SURE FRONT EDGE OF GRATE IS INSERTED IN FRAME FIRST THEN LOWER BACK INTO PLACE. PRESS VELCRO DOTS TOGETHER WHICH ARE LOCATED UNDER LIFTING STRAPS. THIS INSURES STRAPS REMAIN FLUSH WITH GUTTER.

MAINTENANCE: WITH A STIFF BRISTLE BROOM SWEEP SILT & OTHER DEBRIS OFF SURFACE AFTER EACH EVENT.

BEAVER DAM DETAIL

FOR CURB & GUTTER INLETS

CALCULATED LMO
CHECKED KJG

EROSION CONTROL NOTES AND DETAILS

BRAND ROAD
SHARED-USE PATH

ITEM 614 – MAINTAINING TRAFFIC

A MINIMUM OF ONE (1) LANE OF TRAFFIC IN EACH DIRECTION SHALL BE MAINTAINED AT ALL TIMES.

LENGTH AND DURATION OF LANE CLOSURES AND RESTRICTIONS SHALL BE AT THE APPROVAL OF THE ENGINEER. IT IS THE INTENT TO MINIMIZE THE IMPACT TO THE TRAVELING PUBLIC. LANE CLOSURES OR RESTRICTIONS OVER SEGMENTS OF THE PROJECT IN WHICH NO WORK IS ANTICIPATED WITHIN A REASONABLE TIME FRAME, AS DETERMINED BY THE ENGINEER, SHALL NOT BE PERMITTED. THE LEVEL OF UTILIZATION OF MAINTENANCE OF TRAFFIC DEVICES SHALL BE COMMENSURATE WITH THE WORK IN PROGRESS.

THE CONTRACTOR SHALL NOTIFY THE CITY OF DUBLIN AT LEAST 14 DAYS IN ADVANCE OF ANY PLANNED CLOSURES OR OTHER DISRUPTION OF TRAFFIC.

THE CONTRACTOR SHALL MAINTAIN ACCESS FROM PUBLIC ROADWAYS TO ALL ABUTTING PROPERTIES THROUGHOUT CONSTRUCTION OF THIS PROJECT, AS WELL AS ACCESS FOR MAIL, WATER, SANITARY SERVICE AND EMERGENCY VEHICLES.

WHERE DRIVEWAY CONSTRUCTION ACTIVITIES ARE ANTICIPATED TO REQUIRE TEMPORARY CLOSURE OF A DRIVEWAY, RESULTING IN SHORT–TERM BLOCKAGE OF ACCESS TO THE PROPERTY, THE CONTRACTOR SHALL PROVIDE A MINIMUM ADVANCE NOTICE OF FORTY–EIGHT (48) HOURS TO THE PROPERTY OWNER. THE DRIVEWAY SHALL BE REOPENED FOR OWNER ACCESS PRIOR TO THE CONCLUSION OF THE WORK DAY.

THROUGHOUT CONSTRUCTION OF SHARED–USE PATH ALONG BRAND ROAD (MUIRFIELD DRIVE TO EARLINGTON PARKWAY), INCLUDING THE PEDESTRIAN BRIDGE OVER BEAR RUN, THE CONTRACTOR SHALL MAINTAIN TRAFFIC ON BRAND ROAD. WHEN DEEMED NECESSARY FOR DELIVERY OF MATERIALS, MOVEMENT OF EQUIPMENT, PAVING OPERATIONS, PLACEMENT OF THE PREFABRICATED BRIDGE, ETC., THE CONTRACTOR MAY UTILIZE FLAGGERS TO MAINTAIN TWO–WAY, ONE–LANE TRAFFIC OPERATION IN ACCORDANCE WITH ODOT STANDARD CONSTRUCTION DRAWING MT–97.10 WITHIN THE IMMEDIATE AREA OF WORK ACTIVITIES.

THROUGHOUT CONSTRUCTION OF SHARED–USE PATH AND PEDESTRIAN BRIDGE ALONG MUIRFIELD DRIVE (BRAND ROAD TO MOORS PLACE), THE CONTRACTOR SHALL CLOSE THE OUTSIDE SOUTHBOUND LANE OF MUIRFIELD DRIVE FROM JUST NORTH OF MOORS PLACE TO JUST SOUTH OF THE BRIDGE OVER NORTH FORK INDIAN RUN WITH DRUMS IN ACCORDANCE WITH ODOT STANDARD CONSTRUCTION DRAWING MT–95.30. IF EXISTING BRIDGE GUARDRAIL IS DISTURBED BY THE CONTRACTOR DURING CONSTRUCTION OF THE PROPOSED PEDESTRIAN BRIDGE, SUCH THAT THE GUARDRAIL IS DEEMED BY THE CITY TO PROVIDE INSUFFICIENT PROTECTION FOR VEHICULAR TRAFFIC, PORTABLE CONCRETE BARRIER SHALL BE PROVIDED IN ACCORDANCE WITH ODOT STANDARD CONSTRUCTION DRAWING MT–95.40.

THE CONTRACTOR SHALL PROVIDE, ERECT AND MAINTAIN SIGNS AND SIGN SUPPORTS AS DETAILED IN THE OHIO MANUAL OF UNIFORM TRAFFIC CONTROL DEVICES.

IN THE EVENT THAT IT BECOMES NECESSARY FOR THE CITY TO PERFORM WORK OF AN IMMEDIATE NATURE (SUCH AS THE PLACEMENT OF BARRICADES OR REPLACEMENT OF SIGNS AND OTHER WARNING OR PROTECTIVE DEVICES) BECAUSE OF FAILURE OR REFUSAL OF THE CONTRACTOR TO PERFORM SUCH WORK AS REQUIRED BY THE CONTRACT, THE CONTRACTOR SHALL REIMBURSE THE CITY AT THE RATE OF 2.5 TIMES THE ACTUAL COST OF LABOR, MATERIALS, AND EQUIPMENT NECESSARY TO PERFORM SUCH WORK. THE CITY SHALL BE REQUIRED TO NOTIFY OR ATTEMPT TO NOTIFY THE DESIGNATED REPRESENTATIVE OF THE CONTRACTOR OF THE NECESSITY TO PERFORM SUCH WORK. IF THE CONTRACTOR REFUSES OR FAILS WITHIN A REASONABLE TIME TO PERFORM OR CAUSE THE PERFORMANCE OF SUCH WORK, THE CITY SHALL BE REIMBURSED BY THE CONTRACTOR IN THE AMOUNT PROVIDED HEREIN BY WAY OF A DEDUCTION FROM THE CONTRACTOR'S NEXT PAYMENT UNDER THE CONTRACT. REASONABLE TIME FOR ALL STREETS INVOLVED ON THIS CONTRACT IS 2 HOURS FROM THE TIME OF NOTIFICATION BY THE CITY.

ALL WORK AND TRAFFIC CONTROL DEVICES SHALL BE IN ACCORDANCE WITH CMS 614 AND OTHER APPLICABLE PORTIONS OF THE SPECIFICATIONS, AS WELL AS THE OHIO MANUAL OF UNIFORM TRAFFIC CONTROL DEVICES. PAYMENT FOR ALL LABOR, EQUIPMENT AND MATERIALS SHALL BE INCLUDED IN THE LUMP SUM CONTRACT PRICE FOR ITEM 614 – MAINTAINING TRAFFIC, UNLESS SEPARATELY ITEMIZED IN THE PLAN.

ITEM 614 – LAW ENFORCEMENT OFFICER WITH PATROL CAR, AS PER PLAN

USE OF LAW ENFORCEMENT OFFICES (LEOS) BY CONTRACTORS OTHER THAN THE USES SPECIFIED IN THIS NOTE WILL NOT BE PERMITTED AT PROJECT COST UNLESS PRIOR APPROVAL HAS BEEN OBTAINED FROM THE ENGINEER. LEOS SHOULD NOT BE USED WHERE THE OHIO MANUAL OF UNIFORM TRAFFIC CONTROL DEVICES (OMUTCD) INTENDS FOR FLAGGERS BE USED.

IN ADDITION TO THE REQUIREMENTS OF CMS 614 AND THE OMUTCD, A UNIFORMED LEO WITH AN OFFICIAL PATROL CAR (CAR WITH TOP–MOUNTED EMERGENCY FLASHING LIGHTS AND COMPLETE MARKINGS OF THE APPROPRIATE LAW ENFORCEMENT AGENCY) SHOULD BE PROVIDED FOR CONTROLLING TRAFFIC FOR THE FOLLOWING TASKS:

A. FOR LANE CLOSURES: DURING INITIAL SET–UP PERIODS, TEAR DOWN PERIODS, SUBSTANTIAL SHIFTS OF A CLOSURE POINT OR WHEN NEW LANE CLOSURE ARRANGEMENTS ARE INITIATED. IN GENERAL, LEOS SHOULD BE POSITIONED AT THE POINT OF LANE RESTRICTION OR ROAD CLOSURE AND TO MANUALLY CONTROL TRAFFIC MOVEMENTS THROUGH INTERSECTIONS IN WORK ZONES.

B. DURING THE ENTIRE ADVANCE PREPARATION AND CLOSURE SEQUENCE WHERE BLOCKAGE OF TRAFFIC IS REQUIRED.

LEOS WORK AT THE DIRECTION OF THE CONTRACTOR. THE CONTRACTOR IS RESPONSIBLE FOR SECURING THE SERVICES OF THE LEOS AND COMMUNICATING THE INTENTIONS OF THE PLANS WITH RESPECT TO DUTIES OF THE LEOS. THE ENGINEER SHALL HAVE FINAL CONTROL OVER THE LEOS' DUTIES AND PLACEMENT AND WILL RESOLVE ANY ISSUES THAT MAY ARISE BETWEEN THE TWO PARTIES. THE CONTRACTOR SHALL UTILIZE ANY OF THE FOLLOWING LAW ENFORCEMENT AGENCY(S): CITY OF DUBLIN, FRANKLIN COUNTY SHERIFF'S OFFICE, OR OHIO STATE HIGHWAY PATROL.

LAW ENFORCEMENT OFFICERS WITH PATROL CAR REQUIRED BY THE TRAFFIC MAINTENANCE TASKS ABOVE SHALL BE PAID FOR ON A UNIT PRICE (HOURLY) BASIS UNDER ITEM 614 – LAW ENFORCEMENT OFFICE WITH PATROL CAR. THE FOLLOWING ESTIMATED QUANTITY HAS BEEN CARRIED TO THE GENERAL SUMMARY.

ITEM 614,	LAW ENFORCEMENT OFFICER WITH PATROL CAR, AS PER PLAN	60 HOURS

THE HOURS PAID SHALL INCLUDE MINIMUM SHOW–UP TIME REQUIRED BY THE LAW ENFORCEMENT AGENCY INVOLVED. ANY ADDITIONAL COSTS (ADMINISTRATIVE OR OTHERWISE) INCURRED BY THE CONTRACTOR TO OBTAIN THE SERVICES OF AN LEO ARE INCLUDED WITH THE BID UNIT PRICE FOR ITEM 614, LAW ENFORCEMENT OFFICER WITH PATROL CAR, AS PER PLAN.

DRUM REQUIREMENTS

PAYMENT FOR DRUMS SHALL BE INCLUDED IN THE LUMP SUM BID FOR MAINTAINING TRAFFIC.

DUST CONTROL

THE CONTRACTOR SHALL FURNISH AND APPLY WATER FOR DUST CONTROL AS DIRECTED BY THE ENGINEER. THE FOLLOWING CONTINGENCY QUANTITY HAS BEEN INCLUDED FOR DUST CONTROL PURPOSES:

ITEM 616, WATER	8 M GAL

ITEM	DESCRIPTION	TOTAL	UNIT
	GENERAL		
614	MAINTAINING TRAFFIC	1	LUMP
623	CONSTRUCTION LAYOUT STAKES	1	LUMP
624	MOBILIZATION	1	LUMP
	ROADWAY		
201	CLEARING AND GRUBBING	1	LUMP
201	TREE REMOVED, 18" SIZE	7	EACH
201	TREE REMOVED, 48" SIZE	1	EACH
201	STUMP REMOVED, 18" SIZE	5	EACH
201	STUMP REMOVED, 30" SIZE	2	EACH
202	WALK REMOVED AND DISPOSED OF	35	SF
202	CURB REMOVED AND DISPOSED OF	56	FT
202	CURB AND GUTTER REMOVED AND DISPOSED OF	30	FT
202	PIPE REMOVED AND DISPOSED OF	44	FT
202	CATCH BASIN REMOVED AND DISPOSED OF	1	EACH
202	CATCH BASIN ABANDONED, AS PER PLAN	4	EACH
202	GUARDRAIL REMOVED AND RESET, AS PER PLAN	50	FT
202	FENCE REMOVED AND DISPOSED OF	30	FT
202	ROCK CHANNEL PROTECTION REMOVED AND DISPOSED OF	90	CY
203	EXCAVATION	1603	CY
203	EMBANKMENT	468	CY
204	SUBGRADE COMPACTION	5080	SY
608	4" CONCRETE WALK, AS PER PLAN	170	SF
608	CURB RAMP, AS PER PLAN	2	EACH
608	DETECTABLE WARNING, 2' x 8', AS PER PLAN	2	EACH
653	TOPSOIL FURNISHED AND PLACED, AS PER PLAN	600	CY
SPECIAL	LIMESTONE STEPS	25	FT
SPECIAL	PROOF SURVEY	1	LUMP
	EROSION CONTROL		
207	PERIMETER FILTER FABRIC FENCE	500	FT
207	INLET PROTECTION	20	EACH
659	SEEDING AND MULCHING, AS PER PLAN	7188	SY
659	COMMERCIAL FERTILIZER	1.0	TON
659	WATER	40	M GAL
SPECIAL	TREE PROTECTION FENCE	500	FT

ITEM	DESCRIPTION	TOTAL	UNIT
	DRAINAGE		
604	CATCH BASIN (AA-S133A) WITH BIKE SAFE GRATE	5	EACH
604	MANHOLE, TYPE C (AA-S102)	1	EACH
604	12" ADS YARD DRAIN	2	EACH
604	CATCH BASIN RECONSTRUCTED TO GRADE WITH BIKE SAFE GRATE	1	EACH
901	8" PIPE, WITH TYPE 1 BEDDING, ADS-N12	34	LF
901	12" PIPE, WITH TYPE 1 BEDDING, 706.02	99	LF
901	12" PIPE, WITH TYPE 1 BEDDING WITH ITEM 912 COMPACTED GRANULAR MATERIAL, 706.02	31	LF
901	15" PIPE, WITH TYPE 1 BEDDING, 706.02	22	LF
SPECIAL	12" ADS FLARED END SECTION WITH DISSIMILAR COUPLER	5	EACH
	PAVEMENT		
301	ASPHALT CONCRETE BASE, PG64-22	610	TON
301	ASPHALT CONCRETE BASE, PG64-22 (DRIVEWAYS)	101	TON
304	AGGREGATE BASE	780	CY
448	ASPHALT CONCRETE SURFACE COURSE, TYPE 1, PG64-22, MEDIUM TRAFFIC	280	TON
448	ASPHALT CONCRETE SURFACE COURSE, TYPE 1, PG64-22, MEDIUM TRAFFIC (DRIVEWAYS)	51	TON
452	8" NON-REINFORCED CONCRETE PAVEMENT	12	SY
609	6" CONCRETE COMBINATION CURB AND GUTTER, AS PER PLAN	30	FT
609	STRAIGHT 18" CONCRETE CURB	49	FT
	WATER		
807	VALVE BOXES ADJUSTED TO GRADE	17	EACH
807	COLUMBUS STANDARD HEAVY DUTY VALVE BOX	11	EACH
810	6" HYDRANT EXTENSIONS	1	EACH
810	6" HYDRANT LOWERING	2	EACH
SPECIAL	SURVEY COORDINATES	1	LUMP

ITEM	DESCRIPTION	TOTAL	UNIT
	TRAFFIC CONTROL *		
630	REMOVAL OF GROUND MOUNTED SIGN AND REERECTION	3	EACH
630	REMOVAL OF GROUND MOUNTED POST SUPPORT AND REERECTION	3	EACH
644	STOP LINE, 24"	16	FT
	STRUCTURES		
	SHARED-USE PATH BRIDGE OVER NORTH FORK INDIAN RUN ALONG MUIRFIELD DRIVE		
202	PORTIONS OF STRUCTURES REMOVED, AS PER PLAN	1	LUMP
503	COFFERDAMS AND EXCAVATION BRACING, AS PER PLAN	1	LUMP
503	UNCLASSIFIED EXCAVATION	1	LUMP
511	CLASS C CONCRETE, FOOTING, AS PER PLAN	70	CY
511	CLASS C CONCRETE, WINGWALL ABOVE FOOTING, AS PER PLAN	31	CY
511	CLASS C CONCRETE, ABUTMENT ABOVE FOOTING, AS PER PLAN	25	CY
512	TYPE 2 WATERPROOFING MEMBRANE	5	SY
512	SEALING CONCRETE SURFACES (EPOXY-URETHANE), AS PER PLAN	71	SY
516	1" PREFORMED EXPANSION JOINT FILLER	34	SF
518	POROUS BACKFILL WITH FILTER FABRIC	48	CY
518	6" PERFORATED CORRUGATED PIPE, INCLUDING SPECIALS, 720.12	79	FT
518	6" NON-PERFORATED CORRUGATED PIPE, INCLUDING SPECIALS, 720.08, AS PER PLAN	45	FT
519	SPECIAL-PATCHING CONCRETE STRUCTURE, MISC.: MUIRFIELD DRIVE WINGWALL	17	CF
SPECIAL	RAILING (42" HIGH METAL RAILING)	56	FT
SPECIAL	ITEM SPECIAL-STRUCTURE MISC.: 67' PRE-ENGINEERED HALF THROUGH TRUSS PEDESTRIAN BRIDGE	1	LUMP
	SHARED-USE PATH BRIDGE OVER BEAR RUN ALONG BRAND ROAD		
503	COFFERDAMS AND EXCAVATION BRACING, AS PER PLAN	1	LUMP
503	UNCLASSIFIED EXCAVATION	1	LUMP
511	CLASS C CONCRETE, FOOTING, AS PER PLAN	22	CY
511	CLASS C CONCRETE, ABUTMENT ABOVE FOOTING, AS PER PLAN	13	CY
512	SEALING CONCRETE SURFACES (EPOXY-URETHANE), AS PER PLAN	26	SY
518	POROUS BACKFILL WITH FILTER FABRIC	8	CY
518	6" PERFORATED CORRUGATED PIPE, INCLUDING SPECIALS, 720.12	24	FT
518	6" NON-PERFORATED CORRUGATED PIPE, INCLUDING SPECIALS, 720.08, AS PER PLAN	30	FT
SPECIAL	ITEM SPECIAL-STRUCTURE MISC.: 25' PRE-ENGINEERED HALF THROUGH TRUSS PEDESTRIAN BRIDGE	1	LUMP
	MAINTENANCE OF TRAFFIC		
614	LAW ENFORCEMENT OFFICER WITH PATROL CAR, AS PER PLAN	60	HOURS
616	WATER	8	M GAL

* DENOTES OHIO DEPARTMENT OF TRANSPORTATION CONSTRUCTION AND MATERIAL SPECIFICATIONS (2013 EDITION). ALL OTHER ITEMS REFERENCE CITY OF COLUMBUS CONSTRUCTION AND MATERIAL SPECIFICATIONS.

CALCULATED LMO
CHECKED KJG

GENERAL SUMMARY

BRAND ROAD
SHARED-USE PATH

FOR LOCATION OF SHARED-USE PATH, SEE OFFSETS FROM ℄ "A" ON CROSS SECTION SHEETS.

A.T.G. = ADJUST TO GRADE
D.N.D. = DO NOT DISTURB
TBRBO = TO BE RELOCATED (BY OTHERS)

MUIRFIELD ASSOCIATION INC.

5790 BRAND RD.
STEVE D. & CAROLYN R. RAND

N = 775235.2670
E = 1787449.9403

6"PMP
EX. R/W
50'
50'
P.I. Sta. 5+00.00
℄ R/W BRAND RD.
EX. 36"
EX. 12"
℄ "A"
16" (D-137)
13-4" B PLAS. ENC.
EX. 36"
EX. R/W
EX. 29"X45"
S 68°48'04" E
EX. 15"
D.N.D.
P.I. Sta. 7+17.85
Δ = 10° 34' 53" LT.
TBRBO
3'R (TYP.)
12"
10"
EX. 12"
EX. R/W
8' SHARED-USE PATH
PERM. ESMT.
13-4" B PLAS. ENC.
EX. GAS MARKER
A.T.G.
8'
D.N.D.
EX. R/W
6"PMP
50'
30'
A.T.G.
(D-137) 16"
S 79°22'57" E
6"
12"
14"
CONST. LIMITS
PERM. ESMT.
EX. R/W
MATCH LINE – STA. 9+00, SEE SHEET 10
10' EX. UTILITY ESMT.
N = 775314.0422
E = 1787246.8341
MATCH EXIST.
THE LAKES AT DUNMERE CONDOMINIUM ASSOC.
10' EX. TELE. ESMT.
2" SRV.
4"
10' EX. ELEC. ESMT.
+84.2 DR1
24' COMM. ASPH. (NO WORK)
5825 BRAND RD.
WASHINGTON TOWNSHIP
BOARD OF TRUSTEES
5805 BRAND RD.
MICHAEL A. & JUDITH E. TEETS

NOTE:
RE-GRADE DITCH FROM STA. 8+35± TO DRIVE PIPE AT STA. 9+80 TO INSURE DRAINAGE.

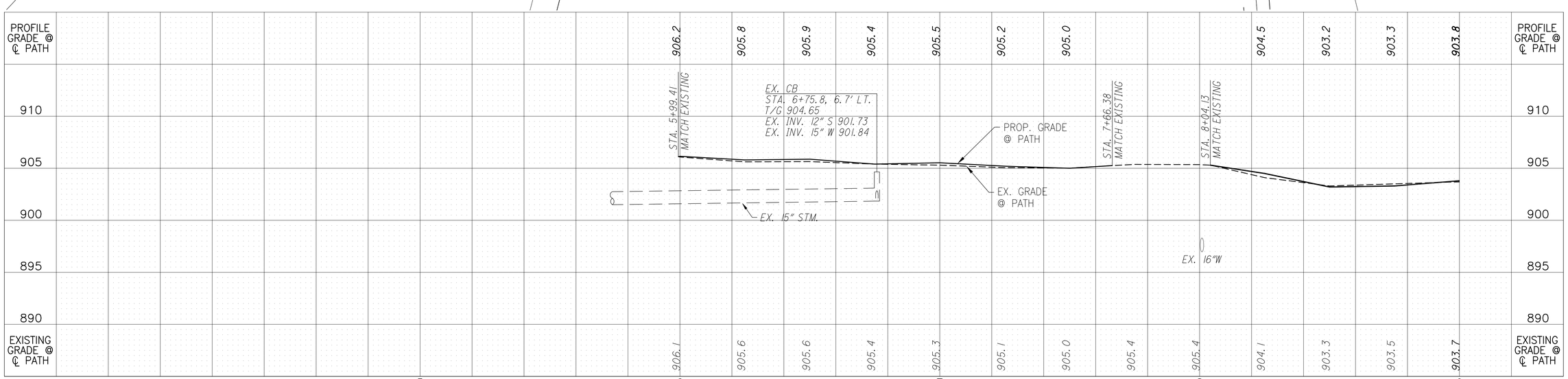

N

HORIZONTAL SCALE IN FEET
0 10 20 40

CALCULATED LAM
CHECKED KJG

PLAN AND PROFILE - BRAND ROAD
℄ "A" STA. 5+00 TO STA. 9+00

BRAND ROAD
SHARED-USE PATH

FOR DRIVE DETAILS SEE SHEET 30.

FOR LOCATION OF SHARED-USE PATH, SEE OFFSETS FROM ℄ "A" ON CROSS SECTION SHEETS.

A.T.G. = ADJUST TO GRADE
D.N.D. = DO NOT DISTURB

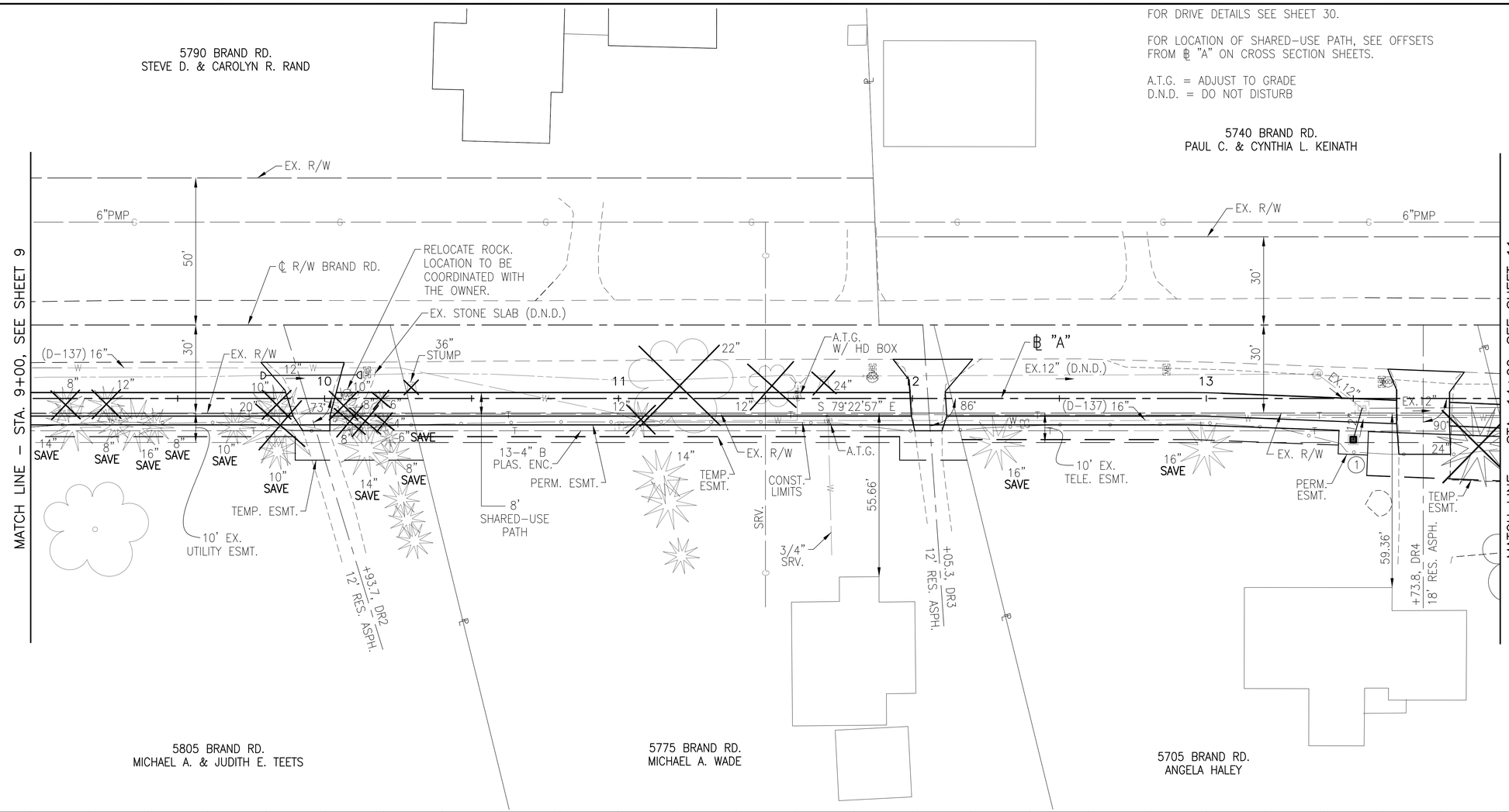

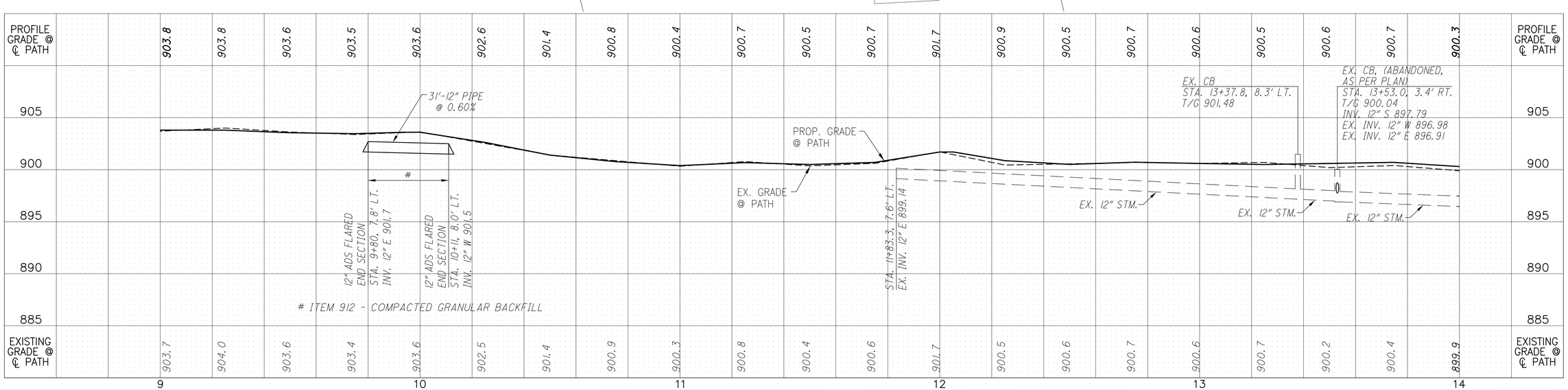

HORIZONTAL SCALE IN FEET 0 10 20 40

CALCULATED LAM
CHECKED KJG

PLAN AND PROFILE - BRAND ROAD ℄ "A" STA. 9+00 TO STA. 14+00

BRAND ROAD SHARED-USE PATH

FOR DRIVE DETAILS SEE SHEET 30.

FOR LOCATION OF SHARED-USE PATH, SEE OFFSETS FROM ℄ "A" ON CROSS SECTION SHEETS.

A.T.G. = ADJUST TO GRADE
D.N.D. = DO NOT DISTURB
ATGBO = ADJUST TO GRADE (BY OTHERS)

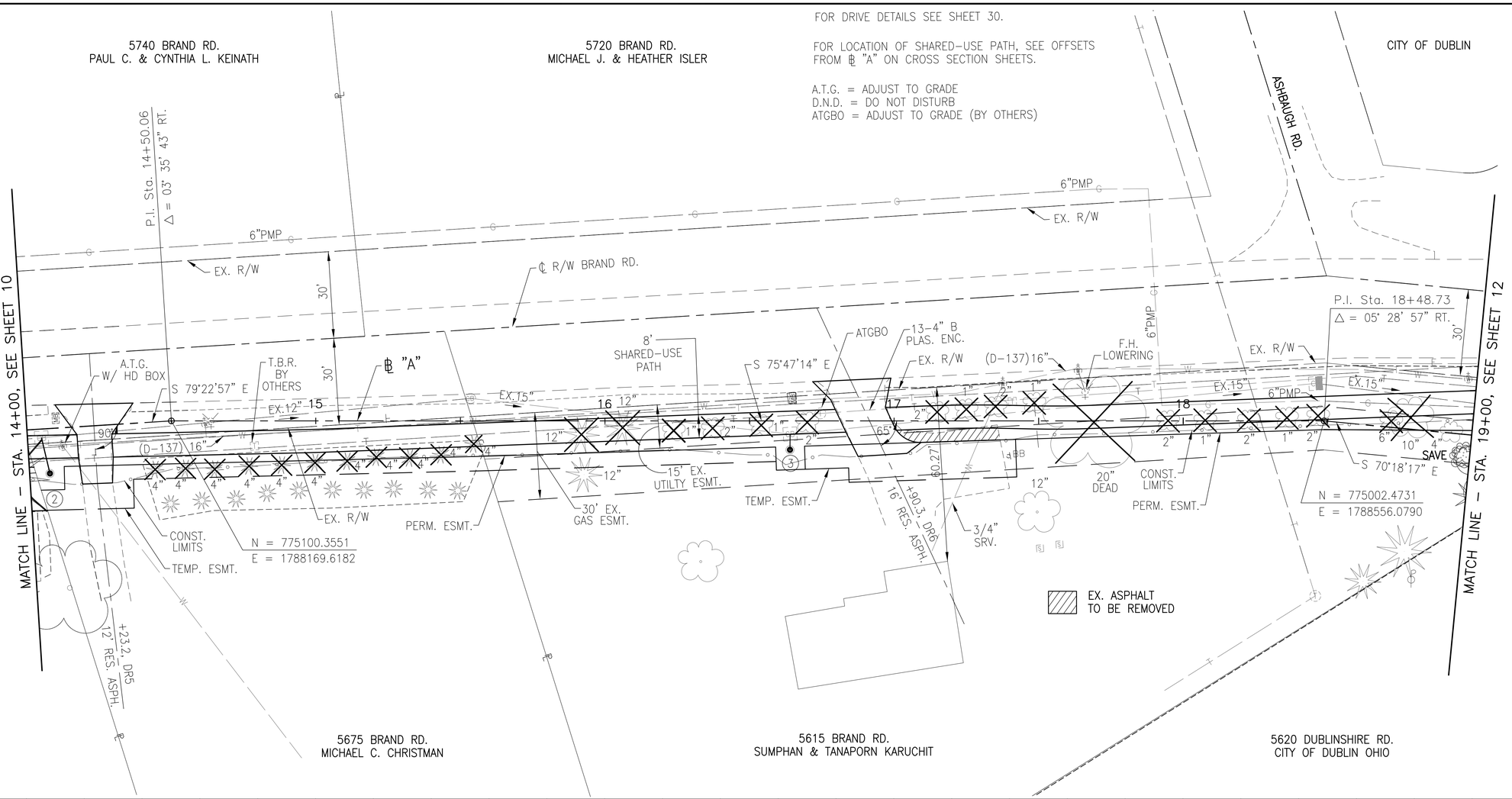

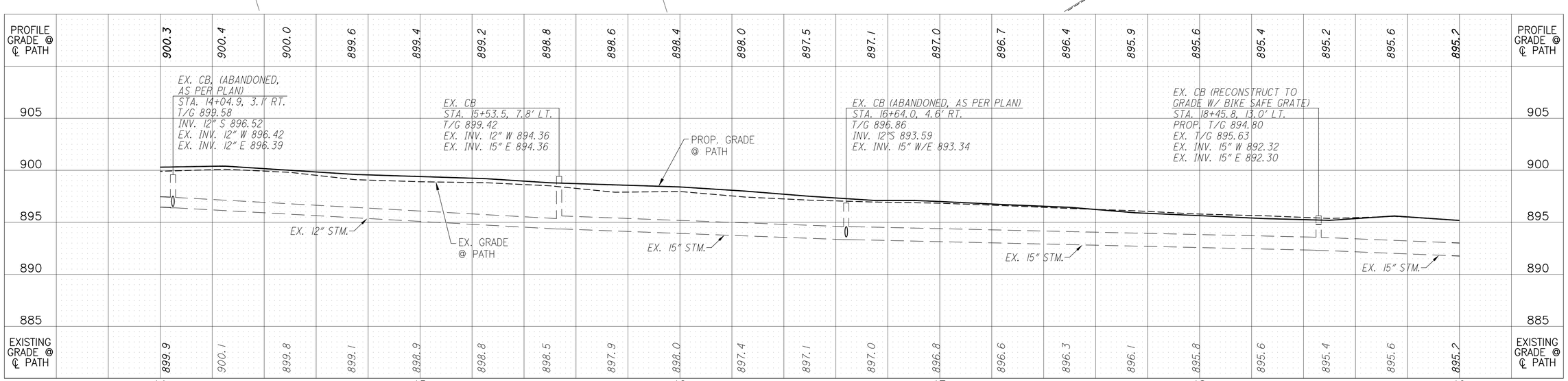

N

HORIZONTAL SCALE IN FEET
0 10 20 40

CALCULATED LAM
CHECKED KJG

PLAN AND PROFILE - BRAND ROAD
℄ "A" STA. 14+00 TO STA. 19+00

BRAND ROAD
SHARED-USE PATH

FOR DRIVE DETAILS SEE SHEET 30.

FOR LOCATION OF SHARED-USE PATH, SEE OFFSETS FROM ℄ "A" ON CROSS SECTIONS

A.T.G. = ADJUST TO GRADE
D.N.D. = DO NOT DISTURB

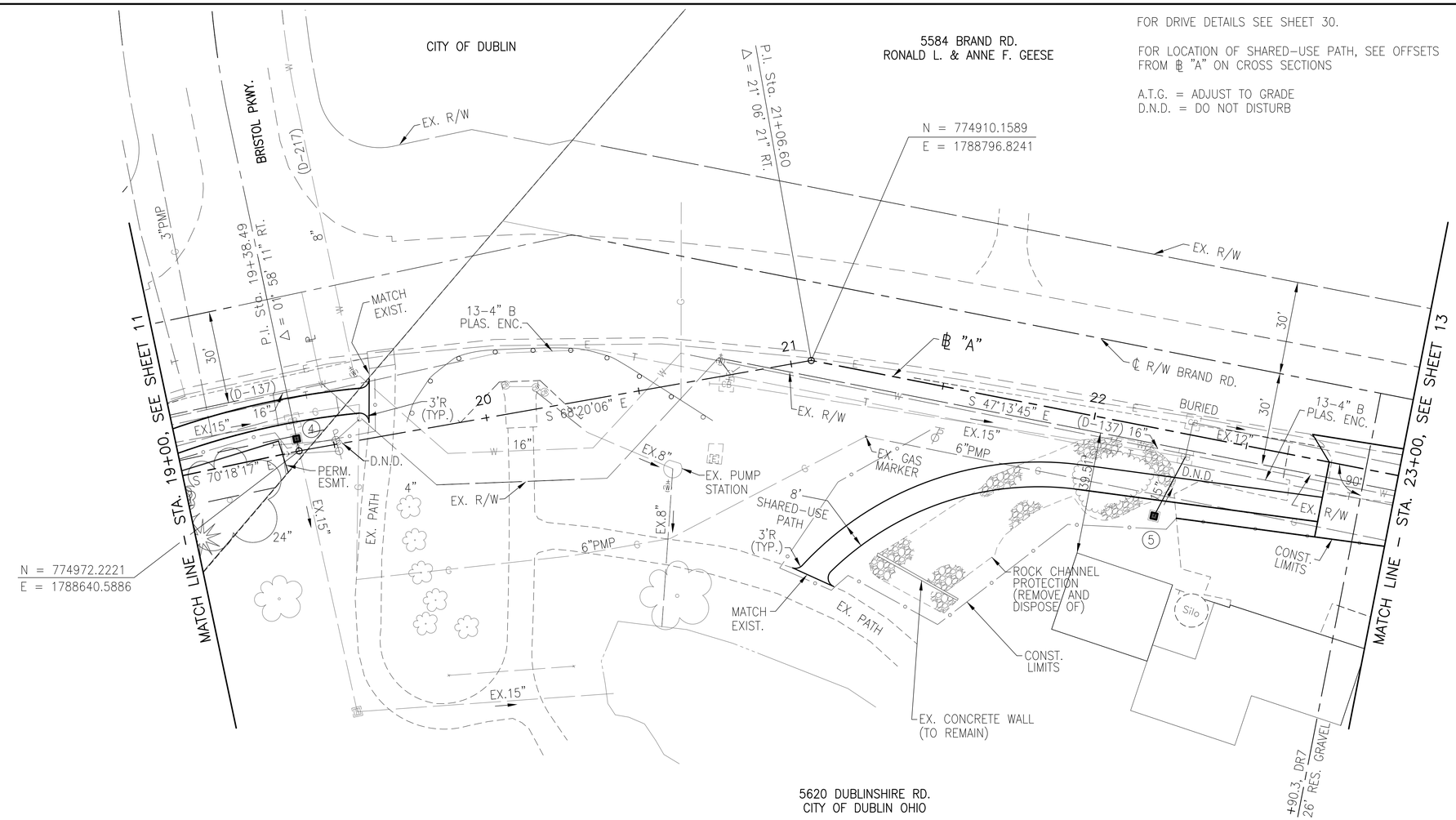

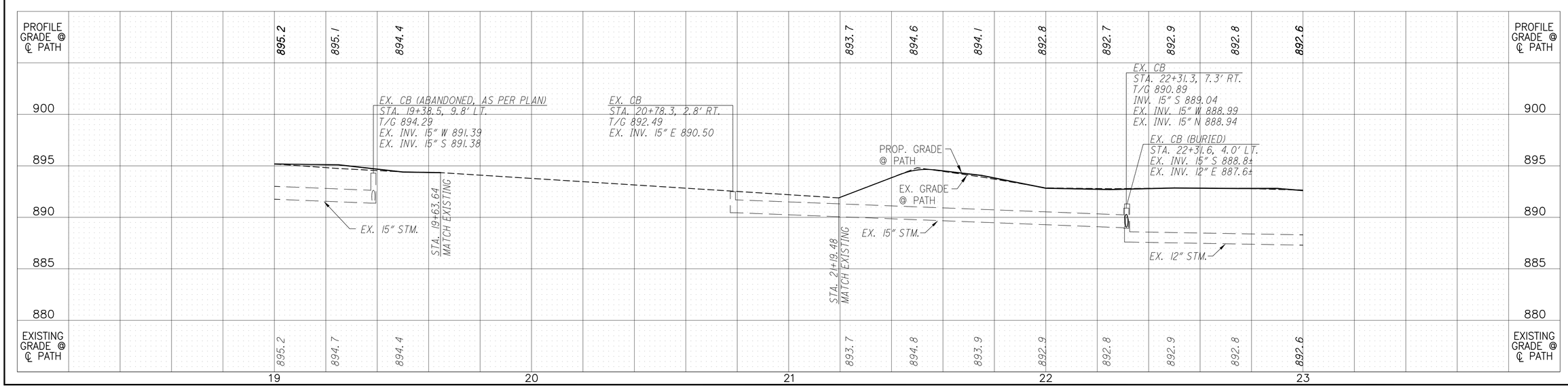

CALCULATED LAM
CHECKED KJG

HORIZONTAL SCALE IN FEET 0 10 20 40

PLAN AND PROFILE - BRAND ROAD
℄ "A" STA. 19+00 TO STA. 23+00

BRAND ROAD
SHARED-USE PATH

FOR DRIVE DETAILS SEE SHEET 30.

FOR LOCATION OF SHARED-USE PATH, SEE OFFSETS FROM ℄ "A" ON CROSS SECTIONS

A.T.G. = ADJUST TO GRADE
D.N.D. = DO NOT DISTURB
TBRBO = TO BE RELOCATED (BY OTHERS)

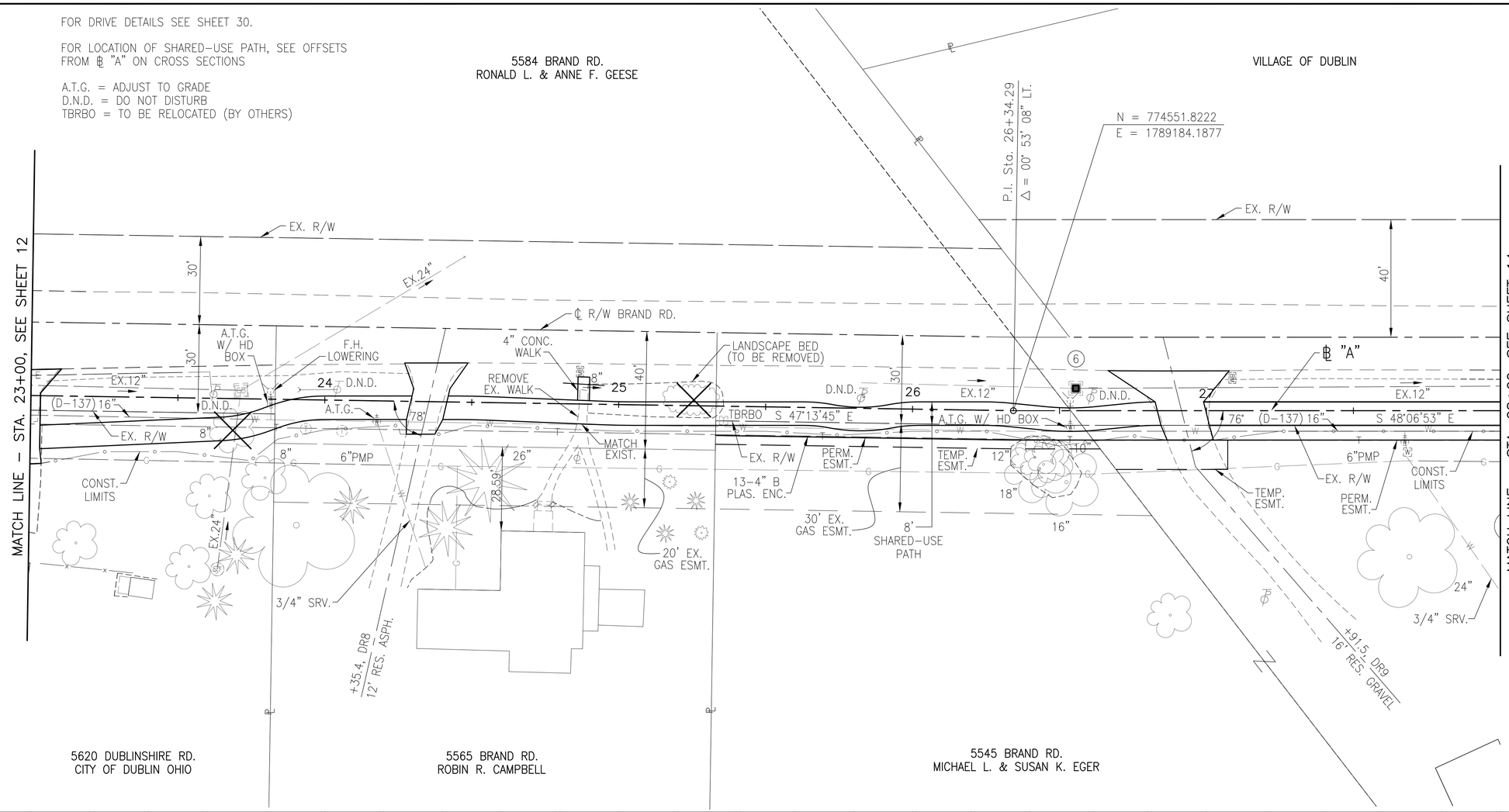

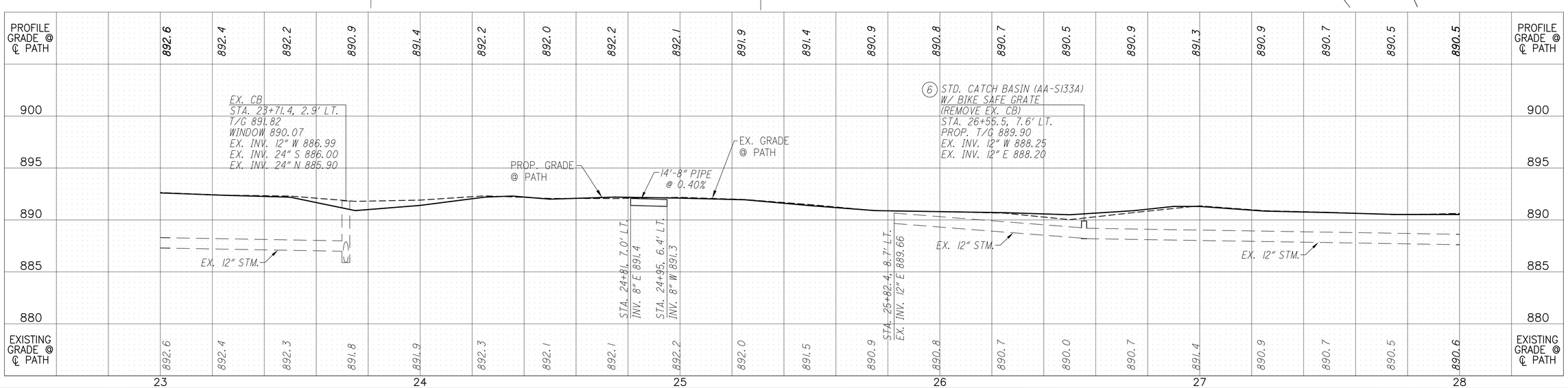

CALCULATED LAM
CHECKED KJG

HORIZONTAL SCALE IN FEET 0 10 20 40

PLAN AND PROFILE - BRAND ROAD
℄ "A" STA. 23+00 TO STA. 28+00

BRAND ROAD
SHARED-USE PATH

FOR DRIVE DETAILS SEE SHEET 30.

FOR LOCATION OF SHARED-USE PATH, SEE OFFSETS FROM ℄ "A" ON CROSS SECTIONS

A.T.G. = ADJUST TO GRADE
D.N.D. = DO NOT DISTURB

VILLAGE OF DUBLIN

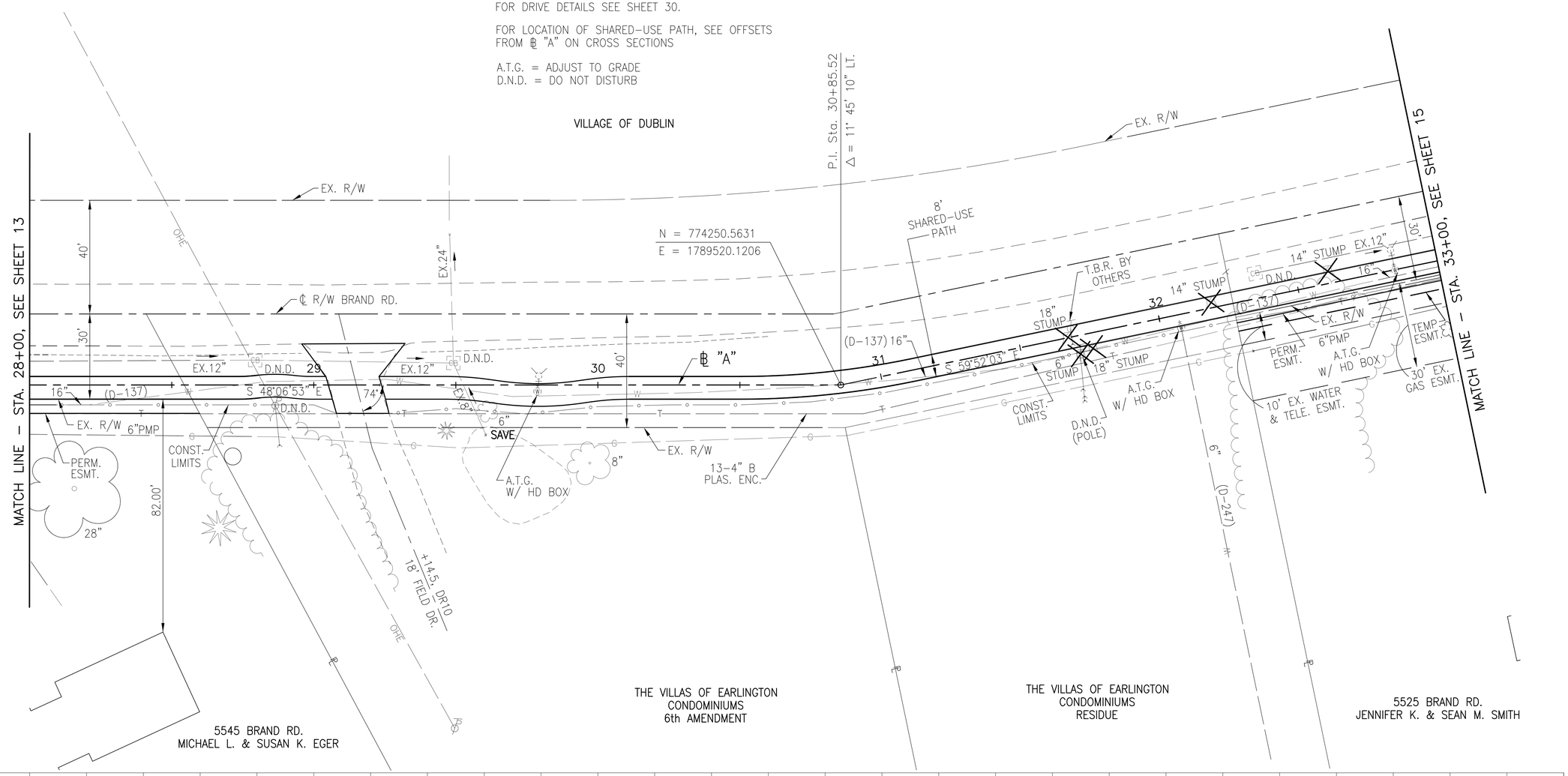

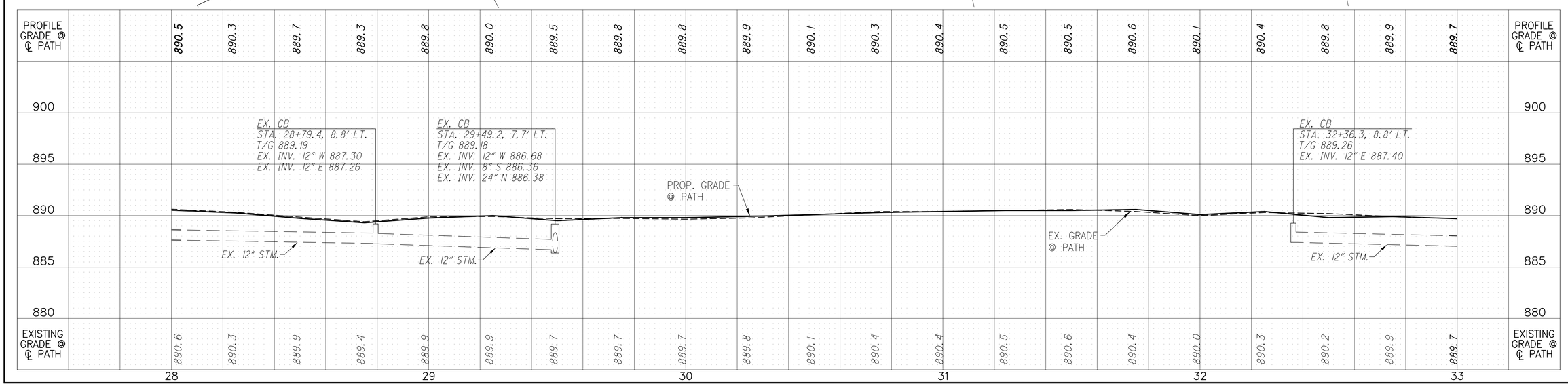

HORIZONTAL SCALE IN FEET
0 10 20 40

CALCULATED LAM
CHECKED KJG

PLAN AND PROFILE - BRAND ROAD
℄ "A" STA. 28+00 TO STA. 33+00

BRAND ROAD
SHARED-USE PATH

FOR DRIVE DETAILS SEE SHEET 30.

FOR LOCATION OF SHARED-USE PATH, SEE OFFSETS FROM ℄ "A" ON CROSS SECTIONS

A.T.G. = ADJUST TO GRADE
D.N.D. = DO NOT DISTURB

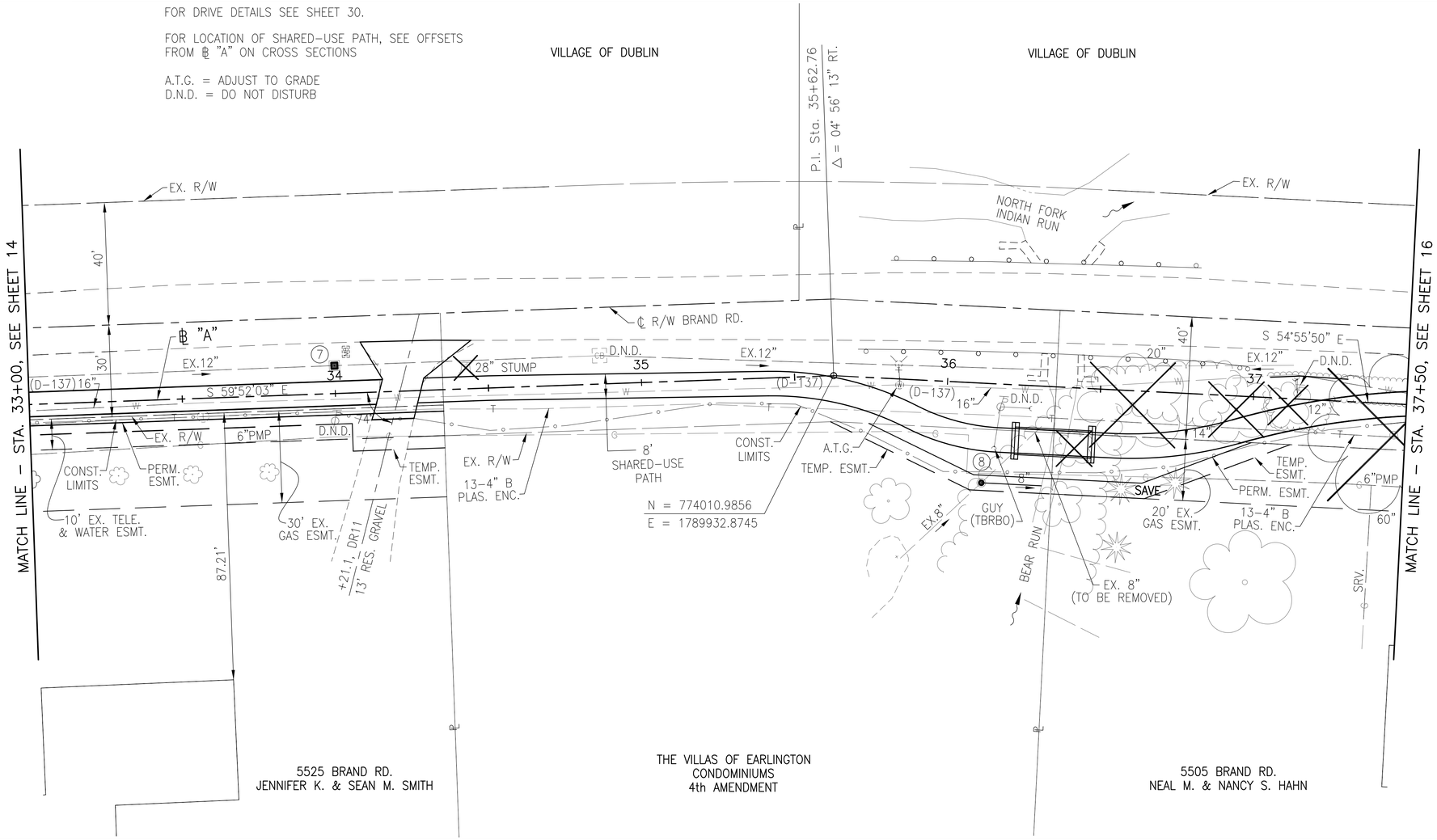

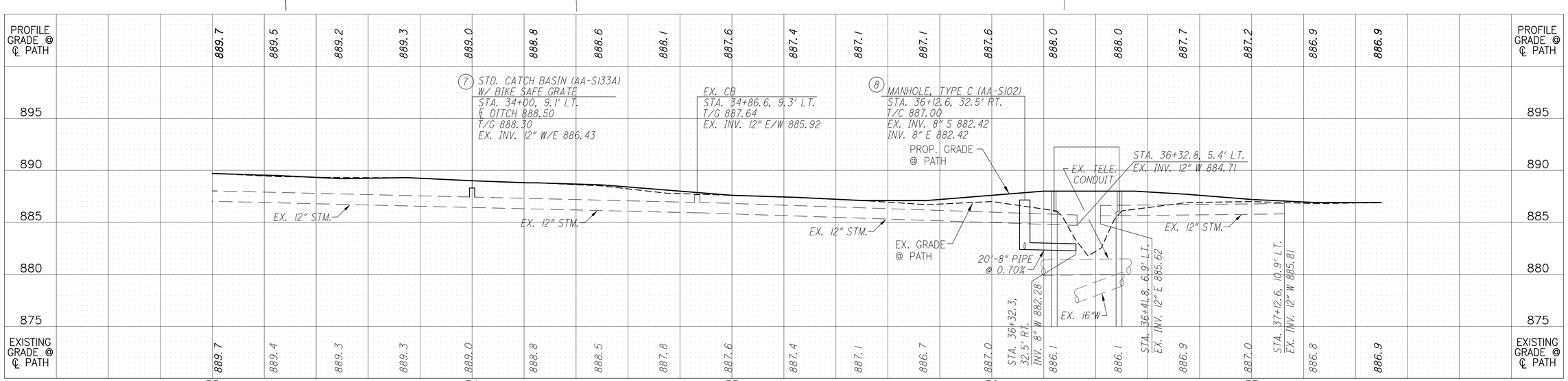

N

HORIZONTAL SCALE IN FEET
0 10 20 40

CALCULATED LAM
CHECKED KJG

PLAN AND PROFILE - BRAND ROAD
℄ "A" STA. 33+00 TO STA. 37+50

BRAND ROAD
SHARED-USE PATH

FOR STORM SEWER DETAILS SEE SHEET 27.
FOR DRIVE DETAILS SEE SHEET 30.

FOR LOCATION OF SHARED-USE PATH, SEE OFFSETS FROM ℄ "A" ON CROSS SECTIONS

A.T.G. = ADJUST TO GRADE
D.N.D. = DO NOT DISTURB

VILLAGE OF DUBLIN

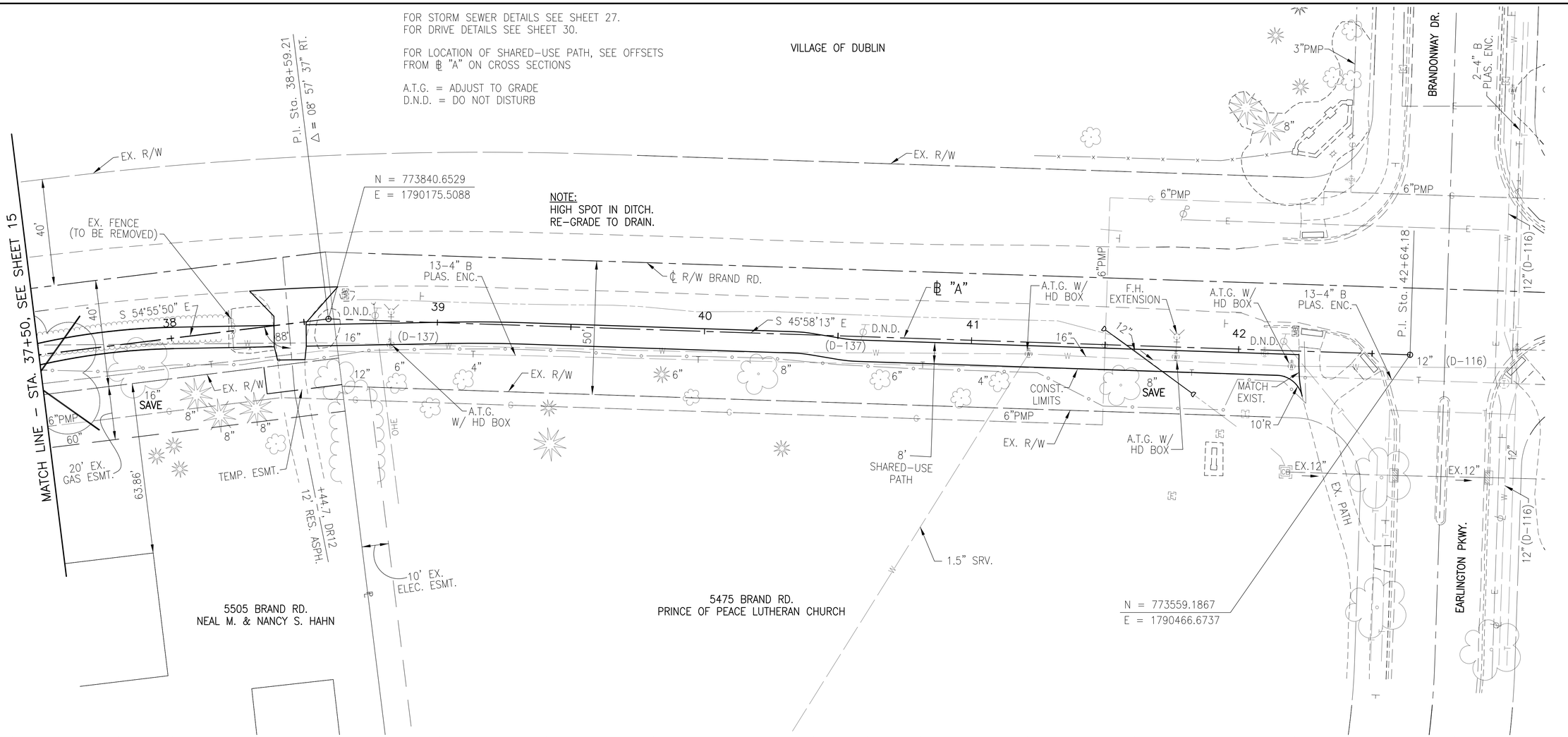

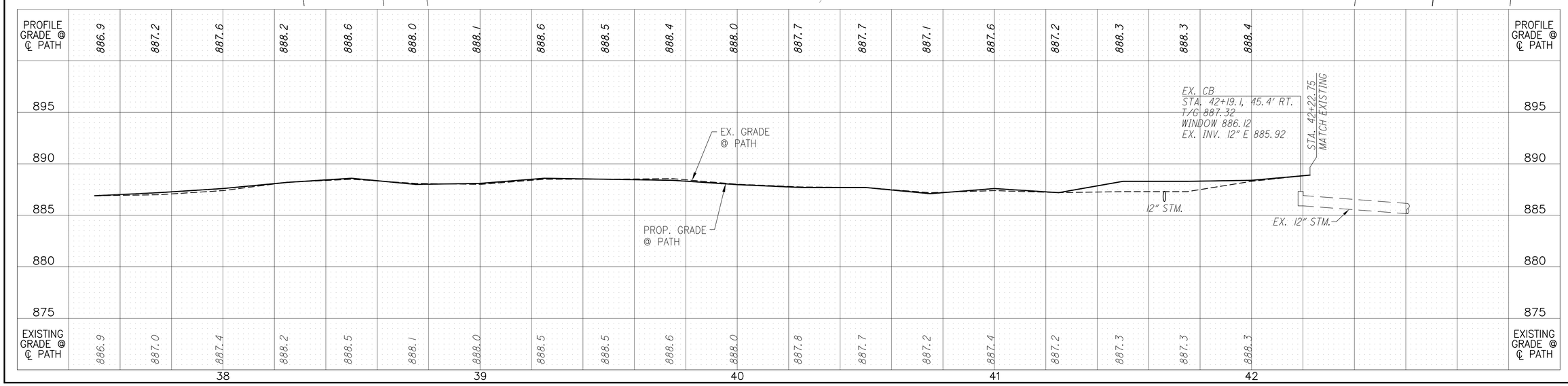

HORIZONTAL SCALE IN FEET
0 10 20 40

CALCULATED LAM
CHECKED KJG

PLAN AND PROFILE - BRAND ROAD
℄ "A" STA. 37+50 TO STA. 42+64.18

BRAND ROAD
SHARED-USE PATH

FOR LOCATION OF SHARED-USE PATH, SEE OFFSETS FROM ℄ "C" ON CROSS SECTION SHEETS.

8715 MUIRFIELD DR
THE COUNTRY CLUB AT MUIRFIELD VILLAGE

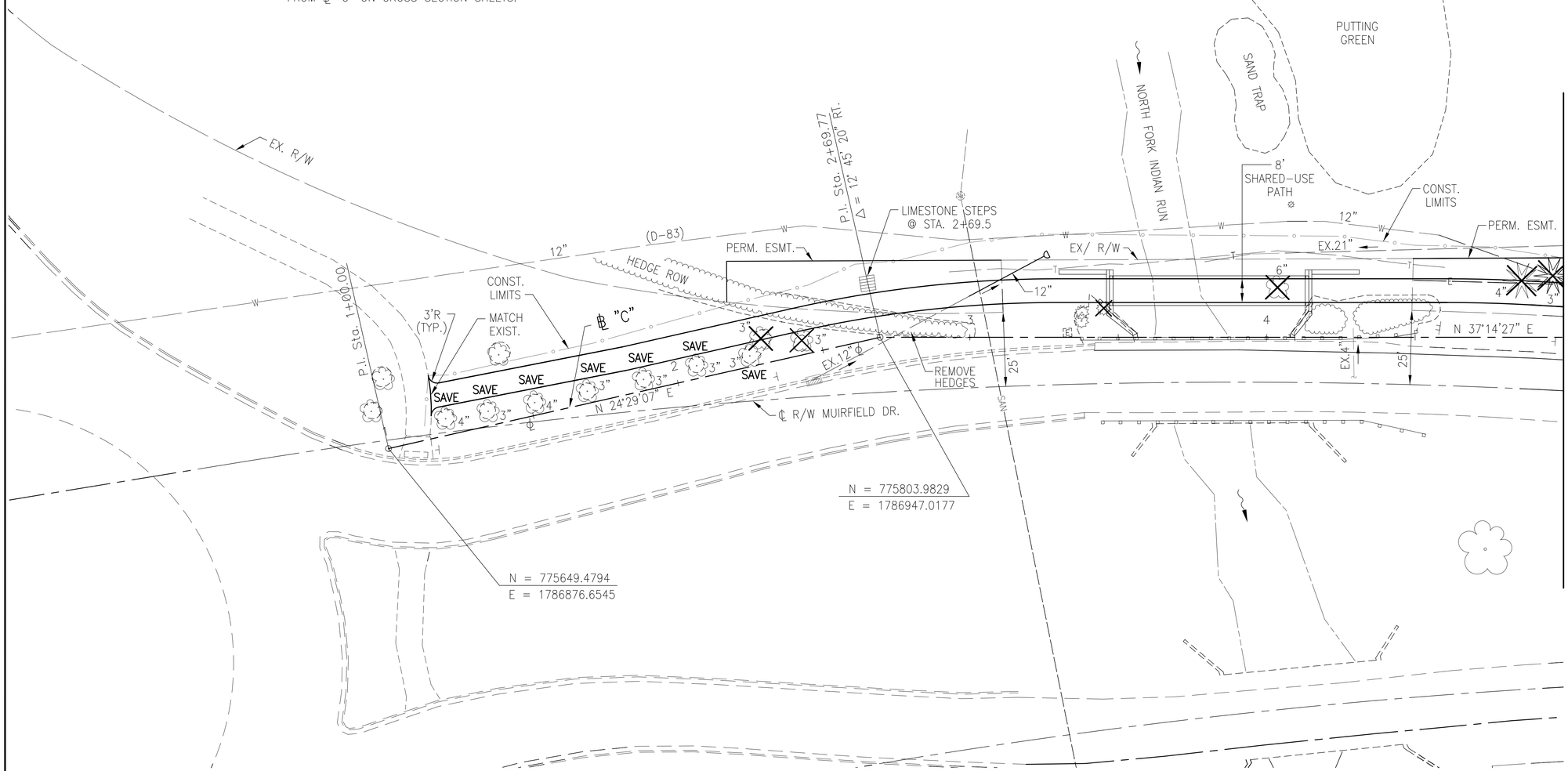

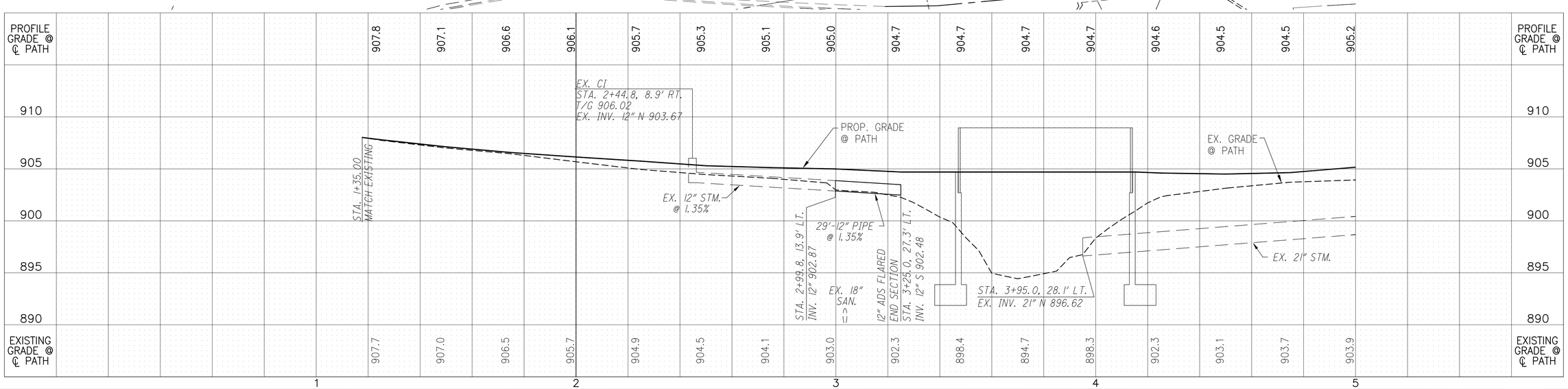

HORIZONTAL SCALE IN FEET
0 10 20 40

CALCULATED LAM
CHECKED KJG

PLAN AND PROFILE - MUIRFIELD DRIVE
℄ "C" STA. 1+00 TO STA. 5+00

BRAND ROAD
SHARED-USE PATH

FOR LOCATION OF SHARED-USE PATH, SEE OFFSETS FROM ℄ "C" ON CROSS SECTION SHEETS.

8715 MUIRFIELD DR.
THE COUNTRY CLUB AT MUIRFIELD VILLAGE

CURB RAMP LOCATIONS

℄ AT FACE OF CURB		
ID	NORTHING	EASTING
A	7760434.12	1787121.60
B	776081.57	1787164.63

LEGEND

SL — STOP LINE, 24"

PV — ITEM 448 - 1 1/4" ASPHALT CONCRETE SURFACE COURSE TYPE I, PG64-22, MEDIUM TRAFFIC
ITEM 452 - 8" NON-REINFORCED CONCRETE PAVEMENT

EX. CURB AND GUTTER REMOVED AND DISPOSED OF

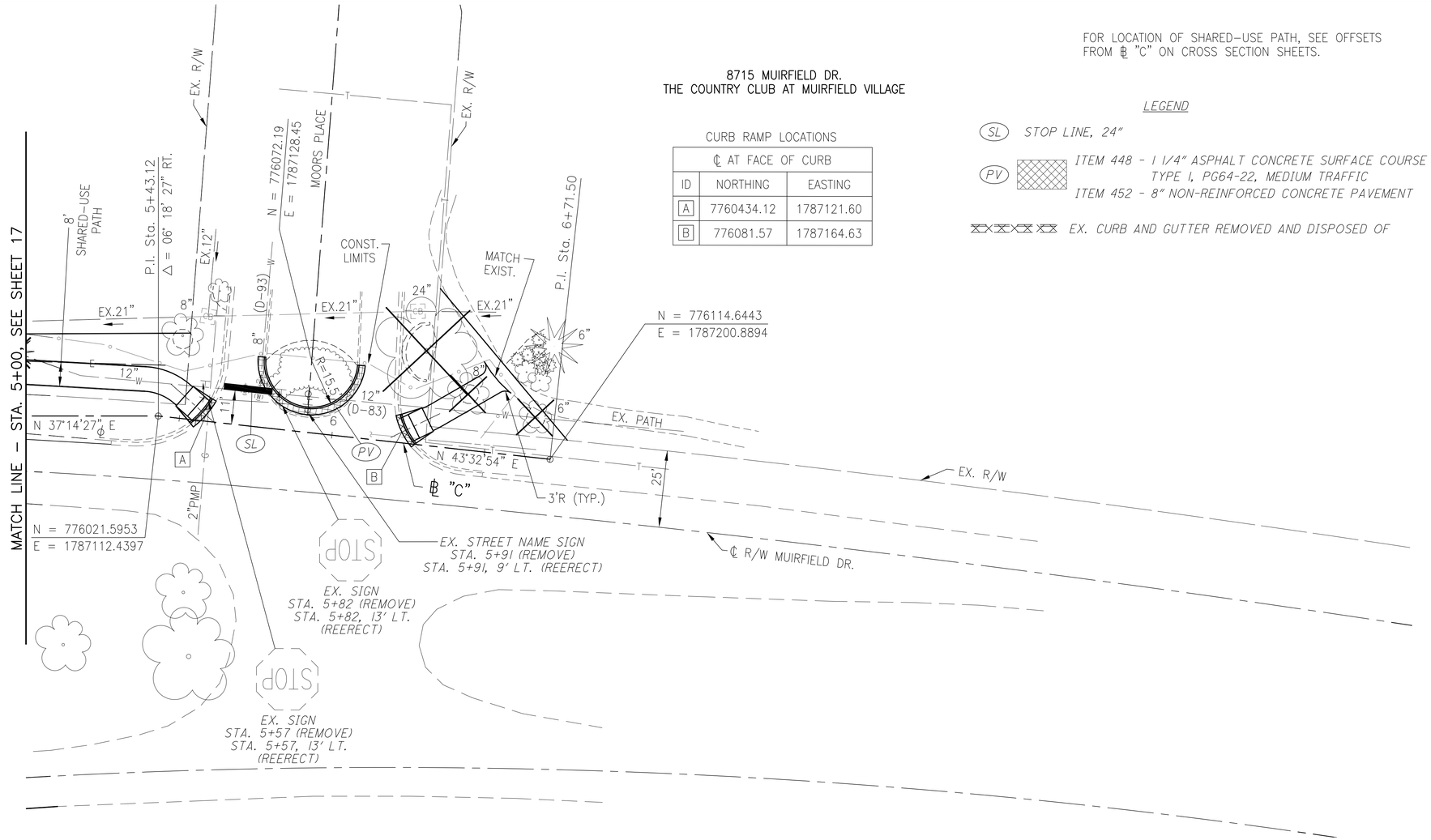

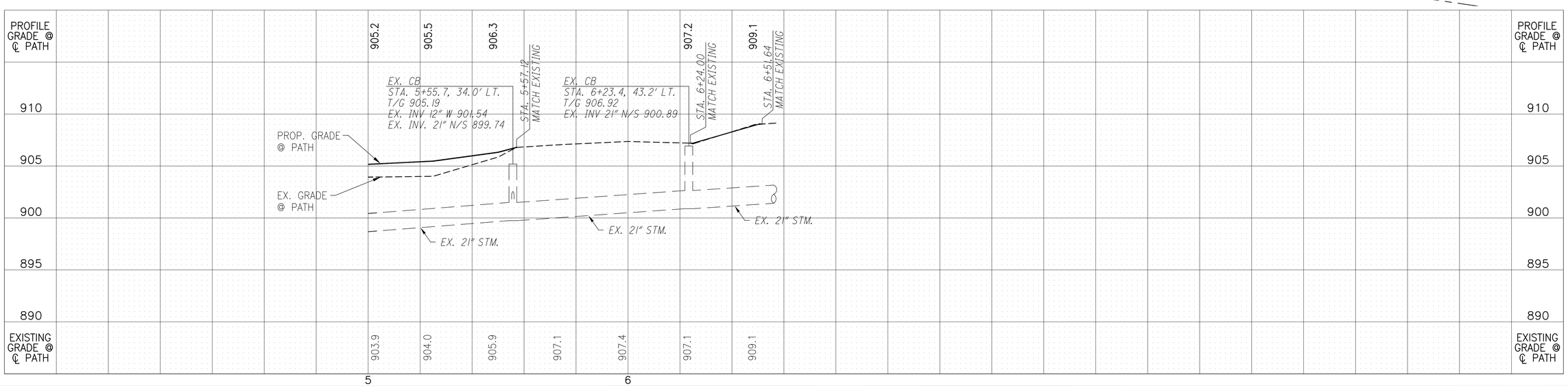

HORIZONTAL SCALE IN FEET 0 10 20 40

CALCULATED LAM
CHECKED KJG

PLAN AND PROFILE - MUIRFIELD DRIVE
℄ "C" STA. 5+00 TO STA. 6+71.50

BRAND ROAD
SHARED-USE PATH

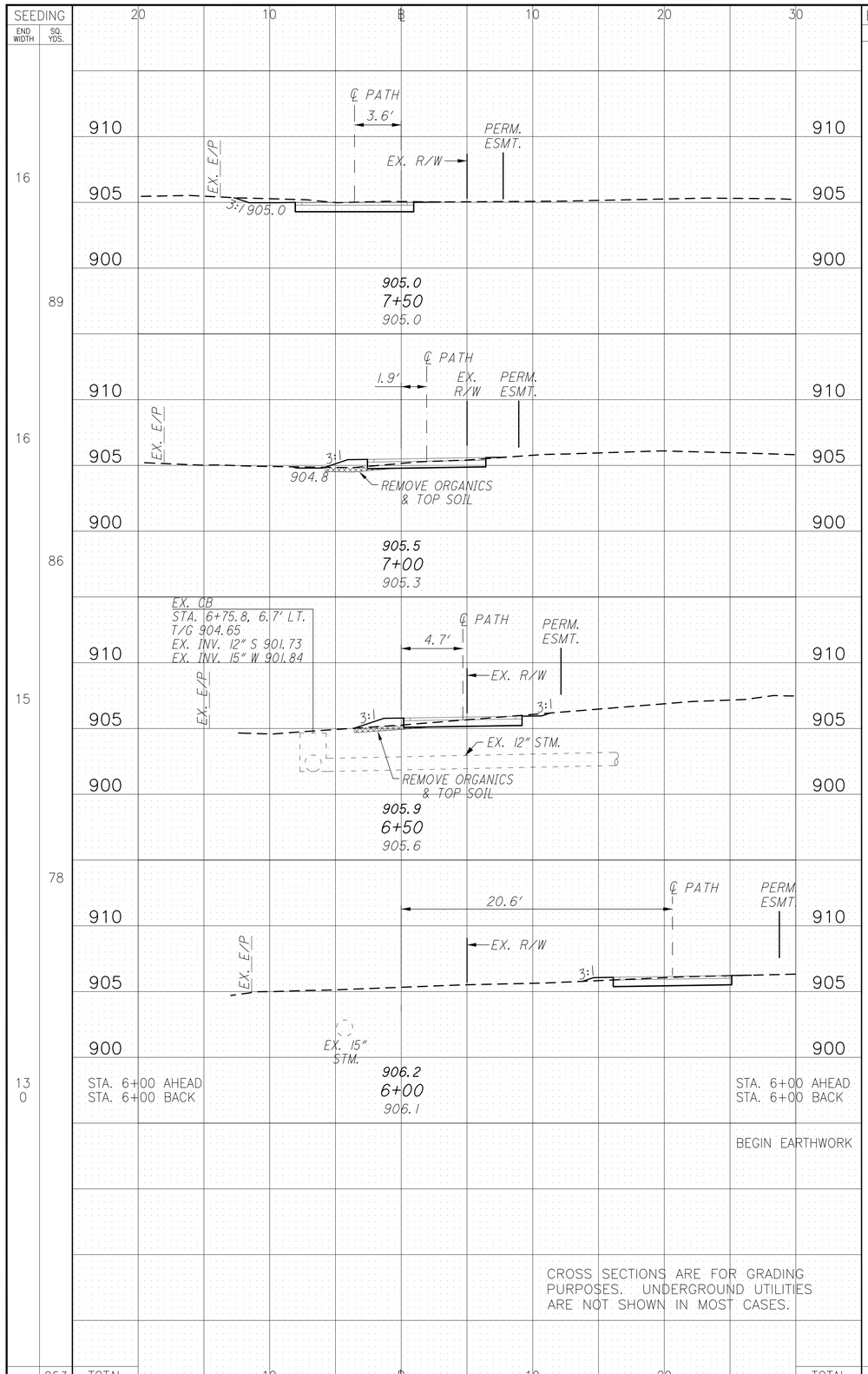

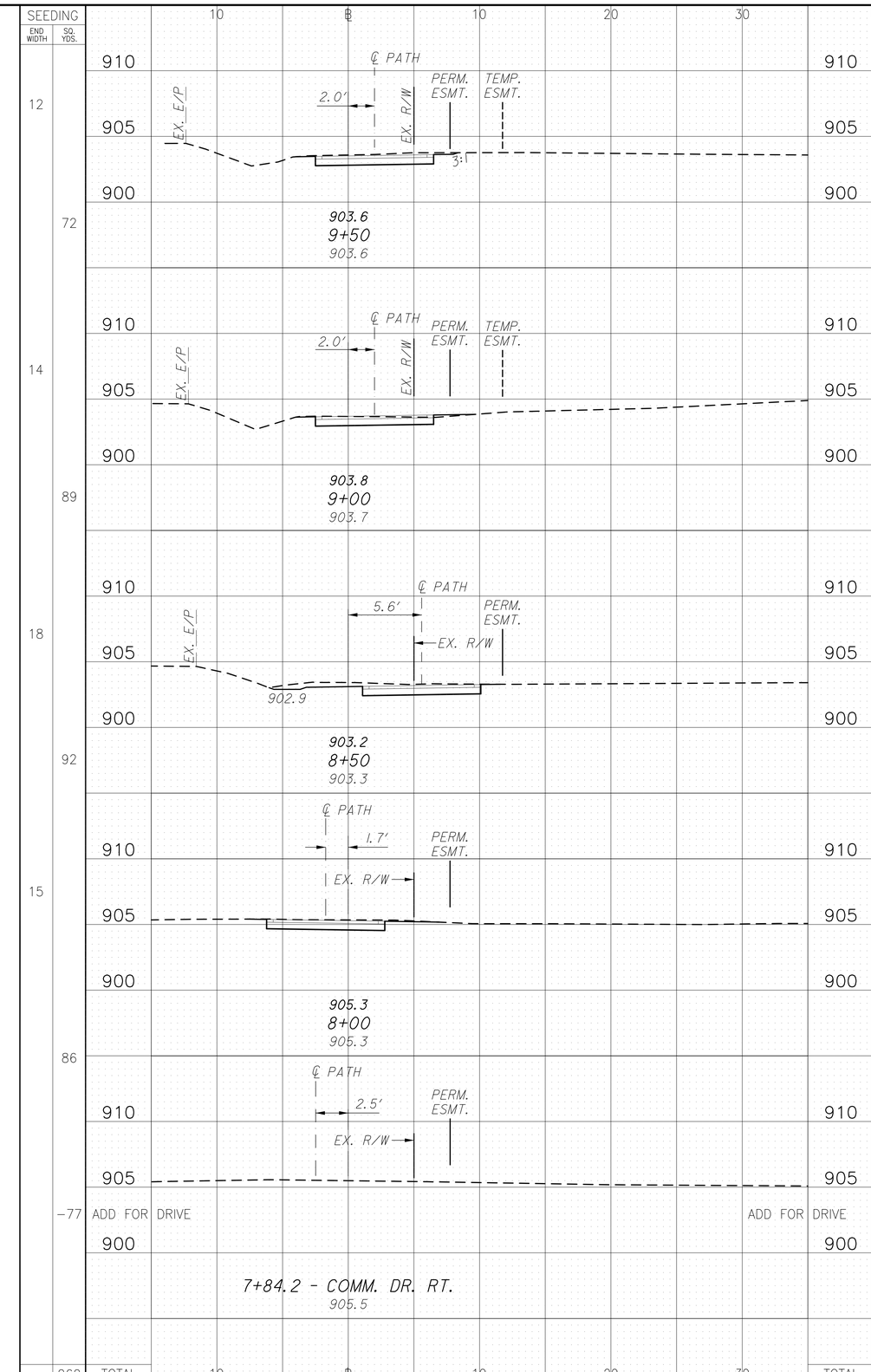

CALCULATED LAM
CHECKED KJG

CROSS SECTIONS - ℄ "A"
STA. 6+00 TO STA. 9+50

BRAND ROAD
SHARED-USE PATH

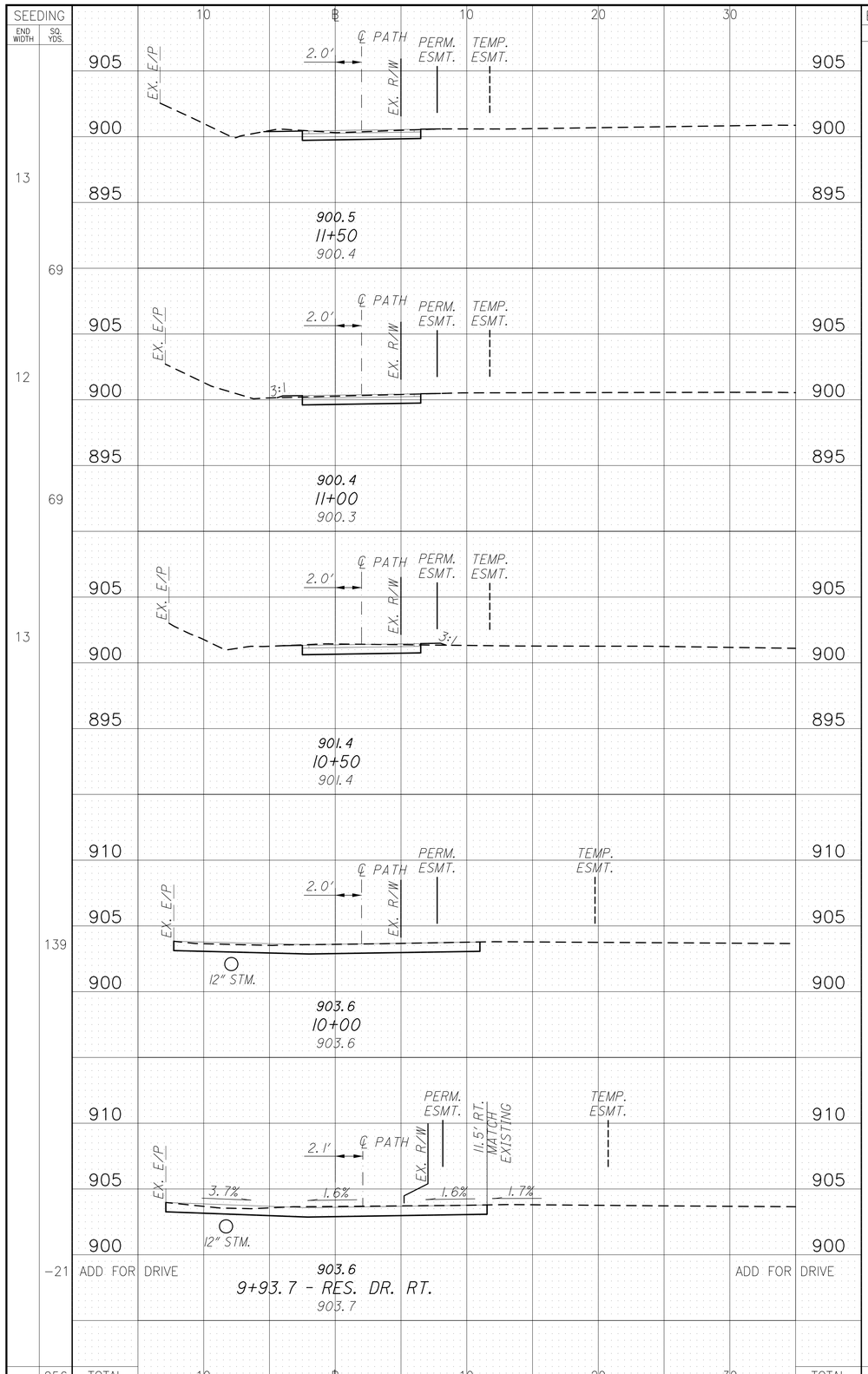

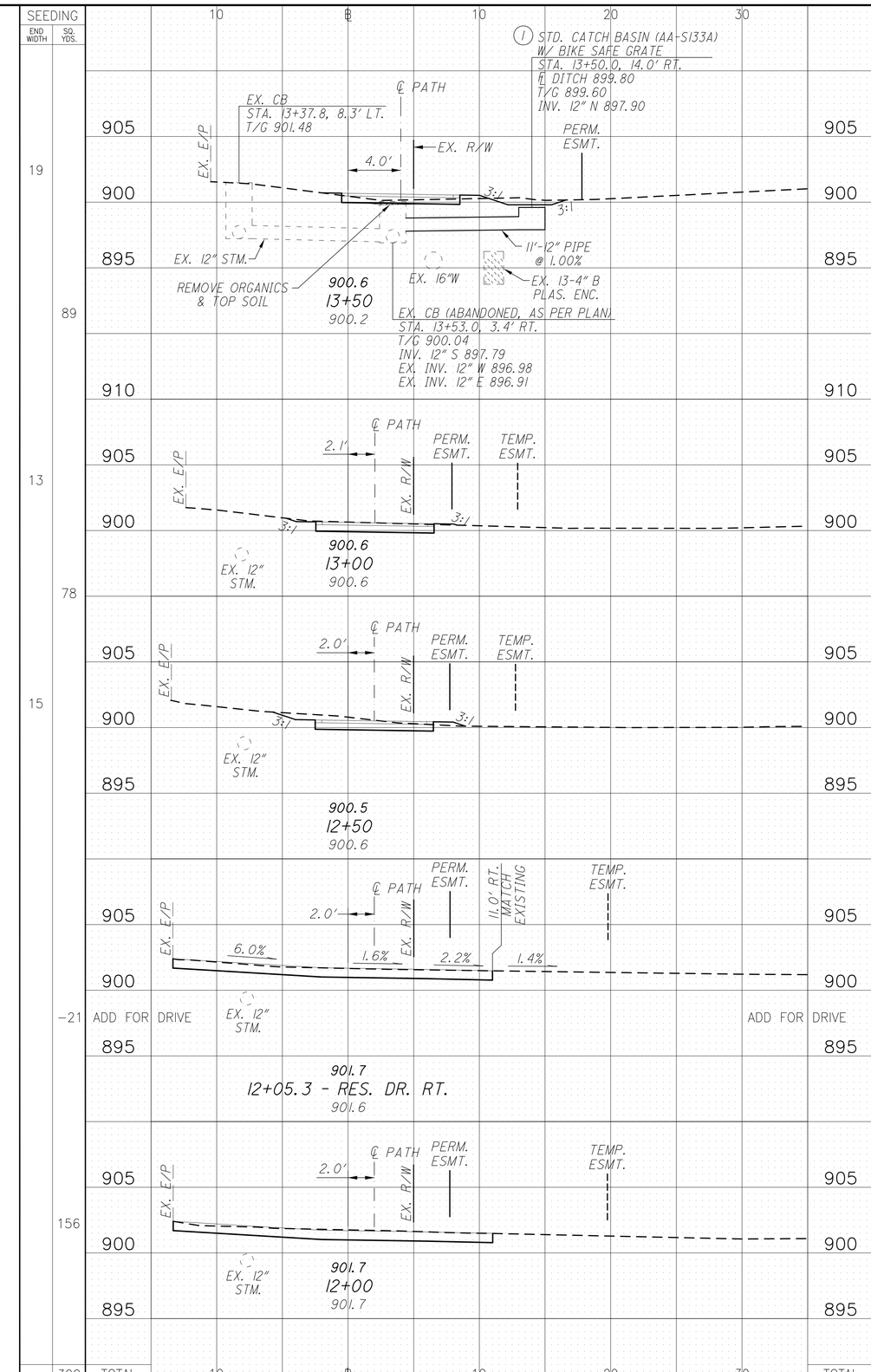

CALCULATED LAM
CHECKED KJG

CROSS SECTIONS - ℄ "A"
STA. 9+93.7 TO STA. 13+50

BRAND ROAD
SHARED-USE PATH

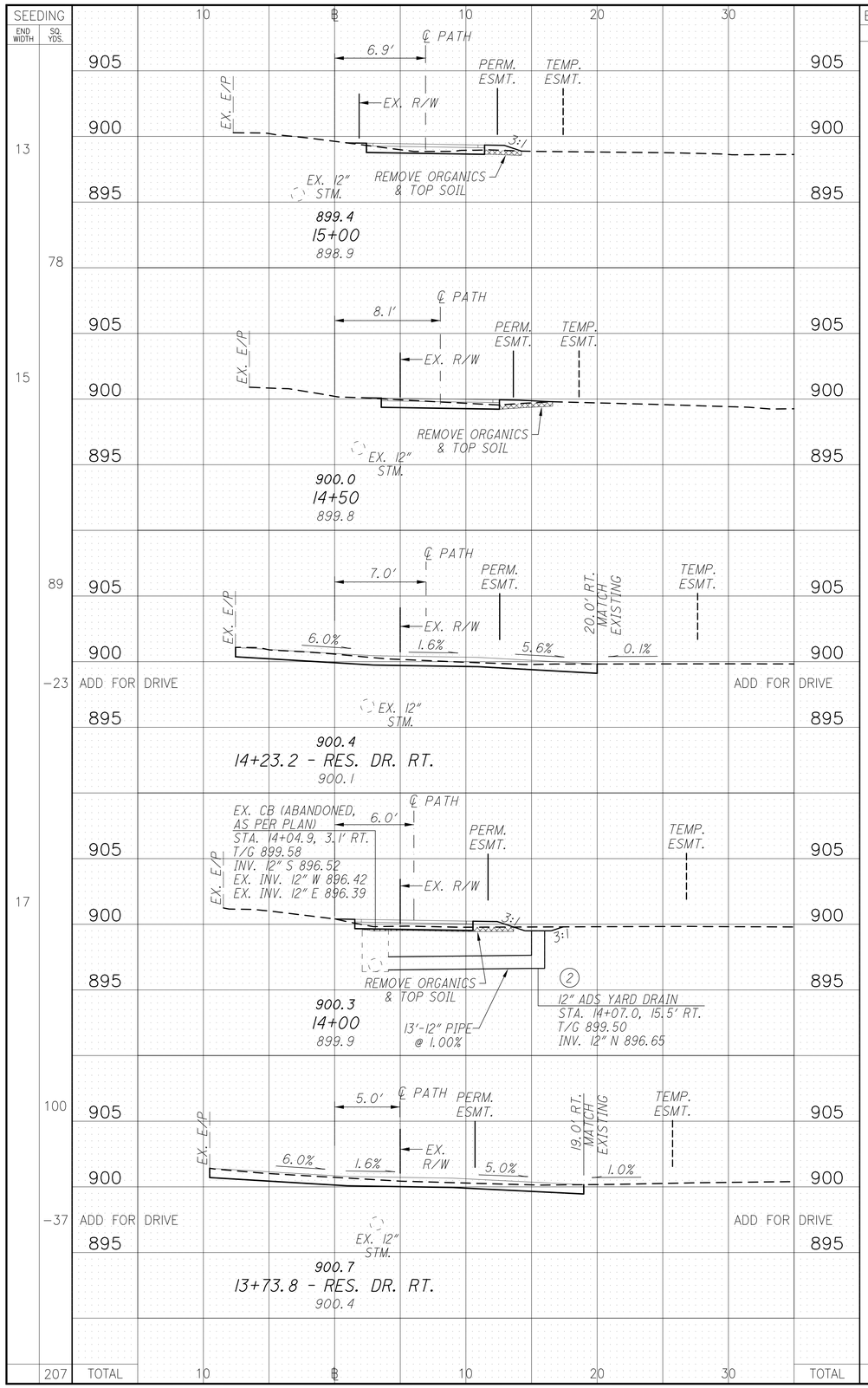

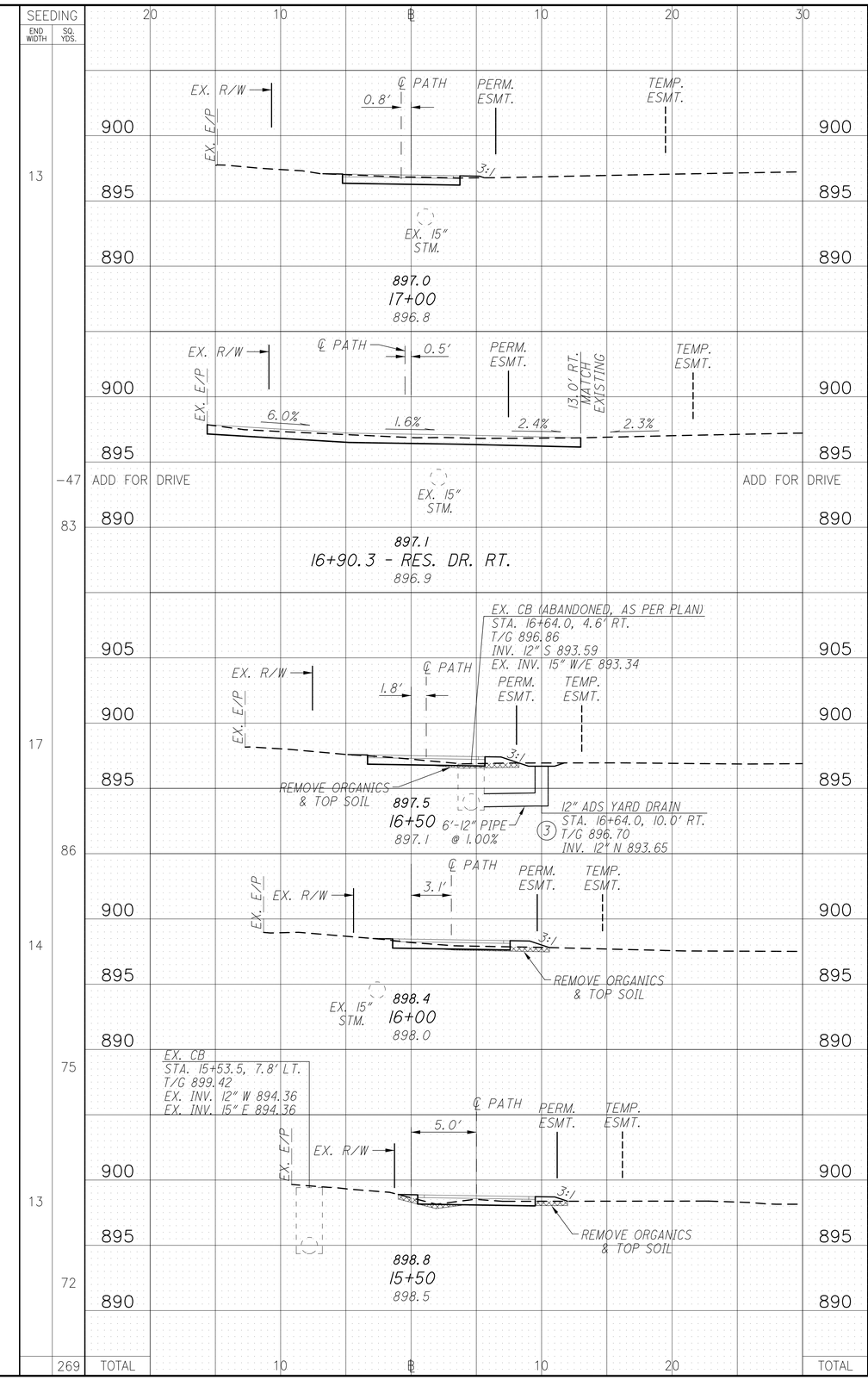

CALCULATED LAM
CHECKED KJG

CROSS SECTIONS - ℄ "A"
STA. 13+73.8 TO STA. 17+00

BRAND ROAD
SHARED-USE PATH

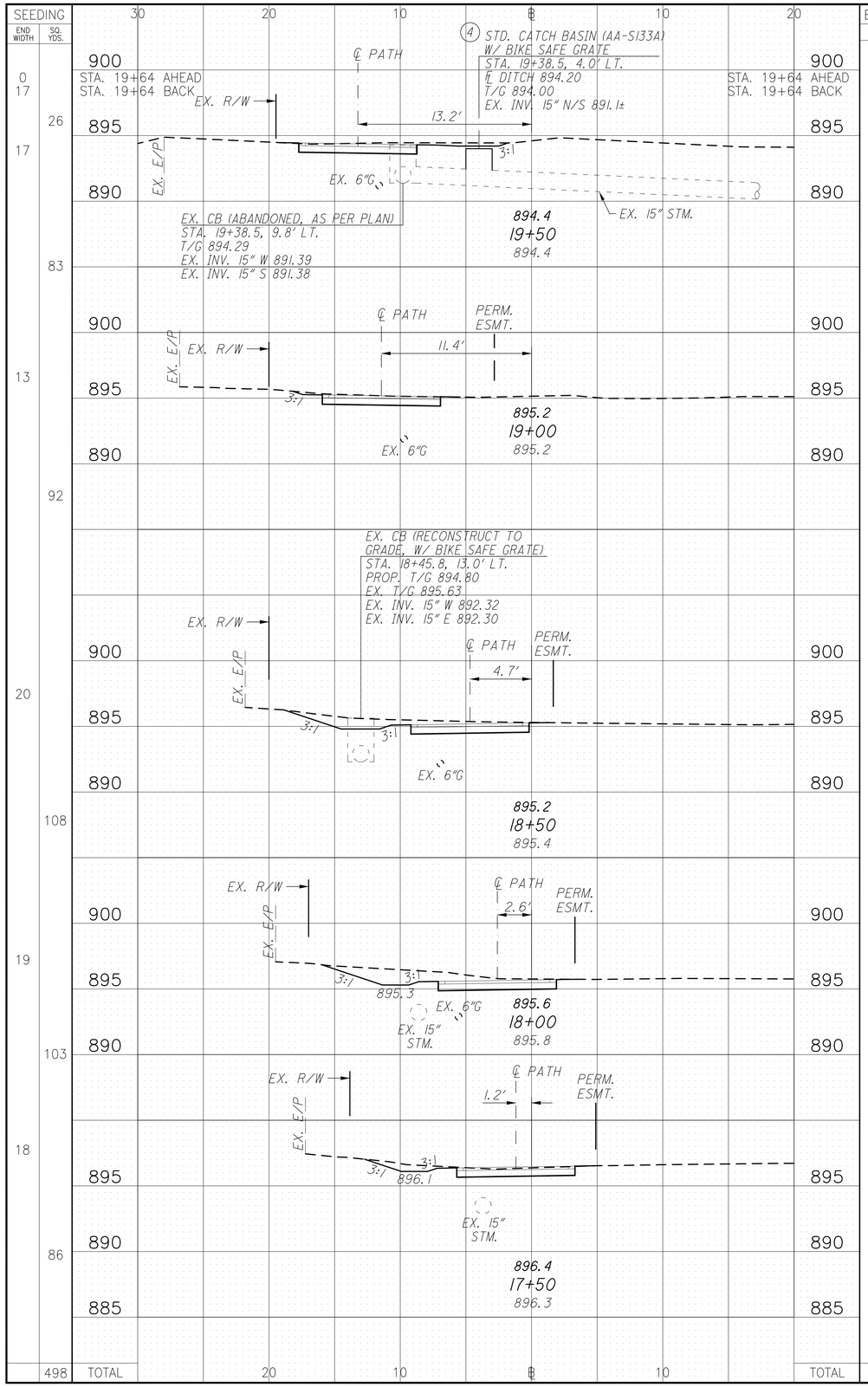

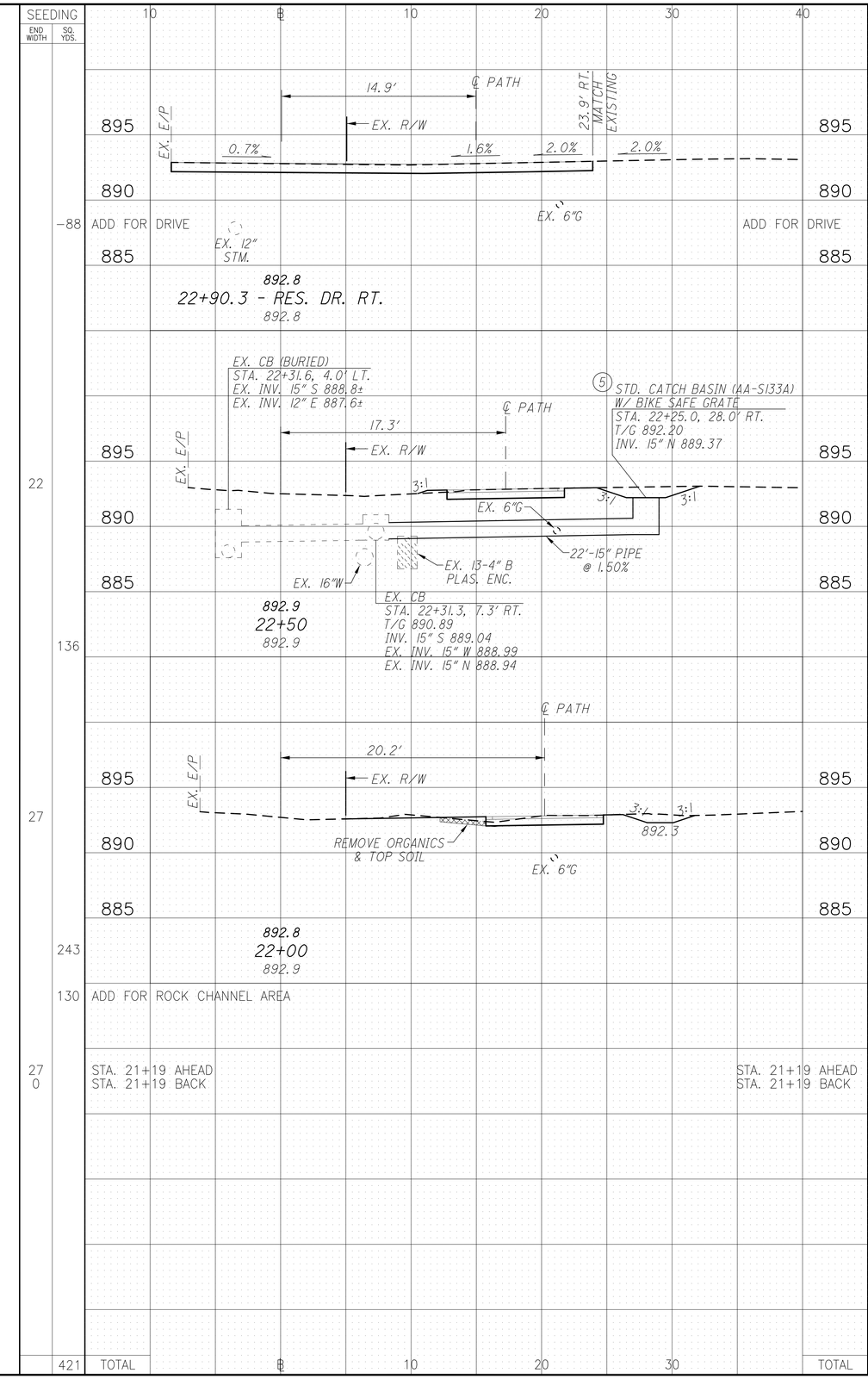

CALCULATED LAM
CHECKED KJG

CROSS SECTIONS - ℄ "A"
STA. 17+50 TO STA. 22+90.3

BRAND ROAD
SHARED-USE PATH

SEEDING END WIDTH	SEEDING SQ. YDS.		END AREA CUT	END AREA FILL	VOLUME CUT	VOLUME FILL
18			13	0		
	-31	ADD FOR DRIVE			3	0
	108				31	0
21			21	0		
	114				31	0
20			13	0		
	233				50	2
	424	TOTAL			115	2

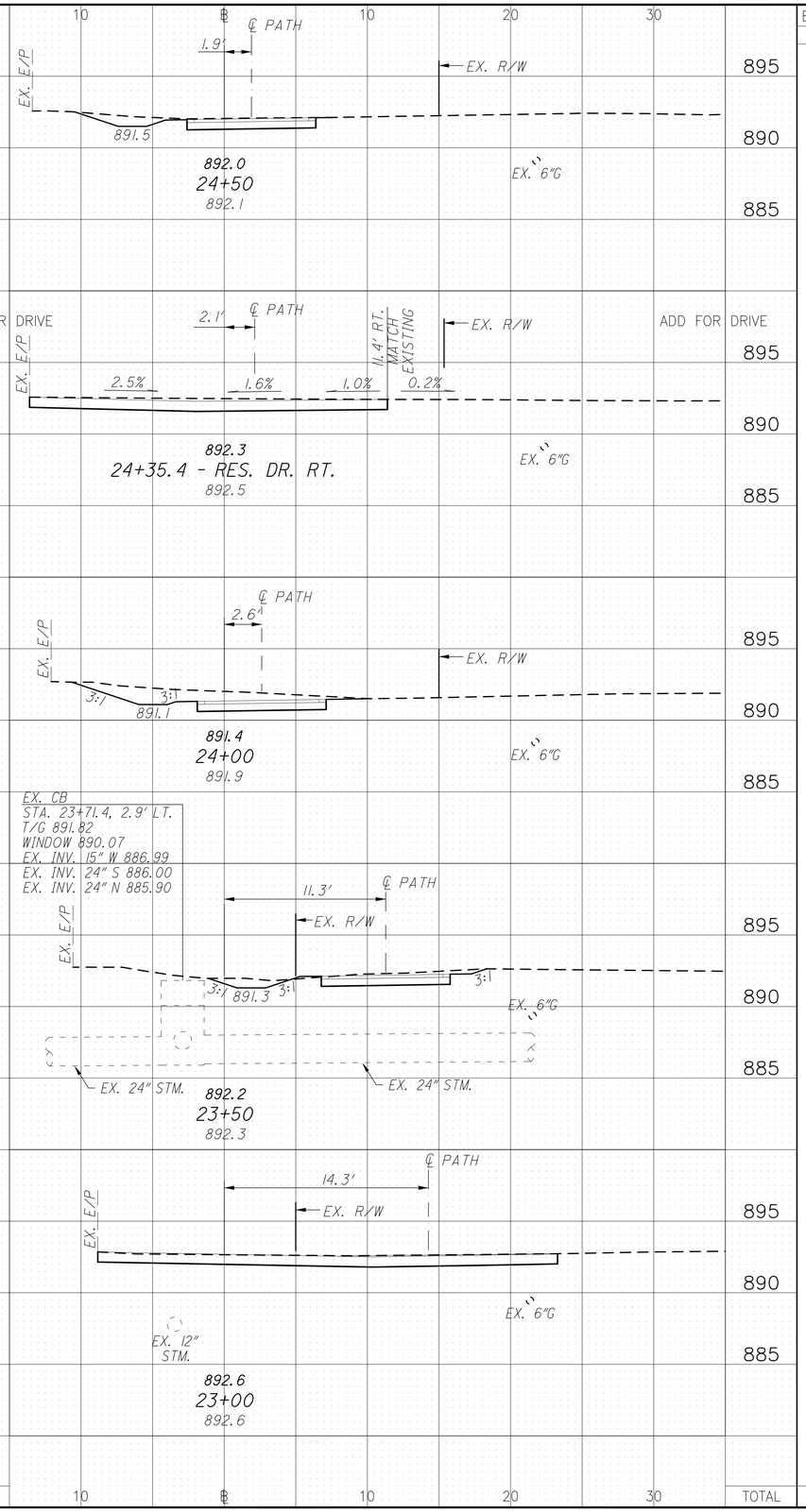

SEEDING END WIDTH	SEEDING SQ. YDS.		END AREA CUT	END AREA FILL	VOLUME CUT	VOLUME FILL
	-56	ADD FOR DRIVE			9	-1
24			10	3		
	111				19	3
16			10	0		
	94				21	0
18			13	0		
	103				26	0
19			15	0		
	103				26	0
	355	TOTAL			101	2

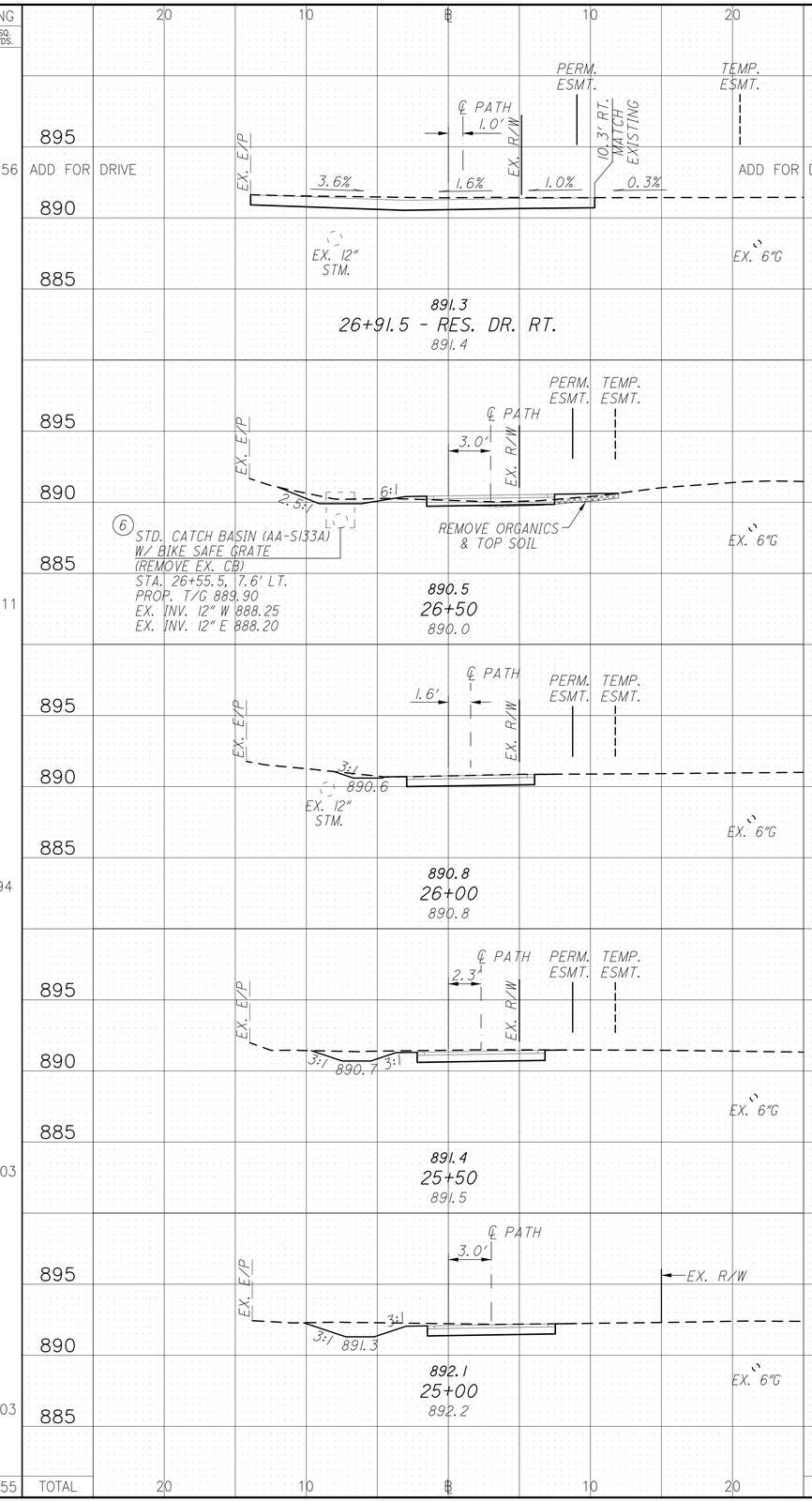

CALCULATED LAM
CHECKED KJG

CROSS SECTIONS - ℄ "A"
STA. 23+00 TO STA. 26+91.5

BRAND ROAD
SHARED-USE PATH

SEEDING END WIDTH	SEEDING SQ. YDS.	END AREA CUT	END AREA FILL	VOLUME CUT	VOLUME FILL
15		11	0		
	89			21	0
17		12	0		
	94			22	0
17		12	0		
	92			21	0
16		11	0		
	222			39	6
	497			103	6

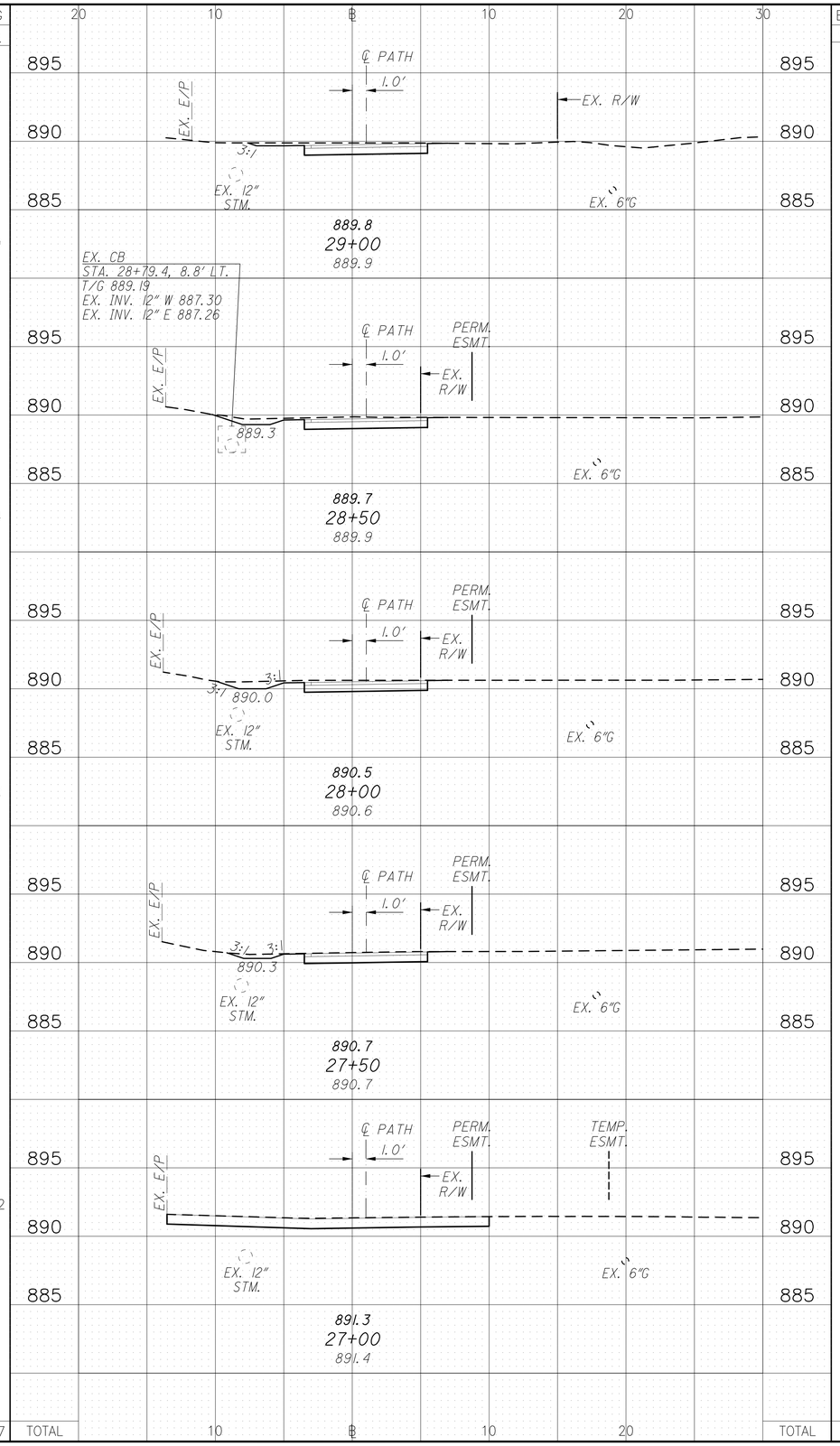

SEEDING END WIDTH	SEEDING SQ. YDS.	END AREA CUT	END AREA FILL	VOLUME CUT	VOLUME FILL
18		11	0		
	94			19	1
16		9	1		
	89			17	2
16		9	1		
	83			19	1
14		12	0		
	81			21	0
	-33			9	0
	314			85	4

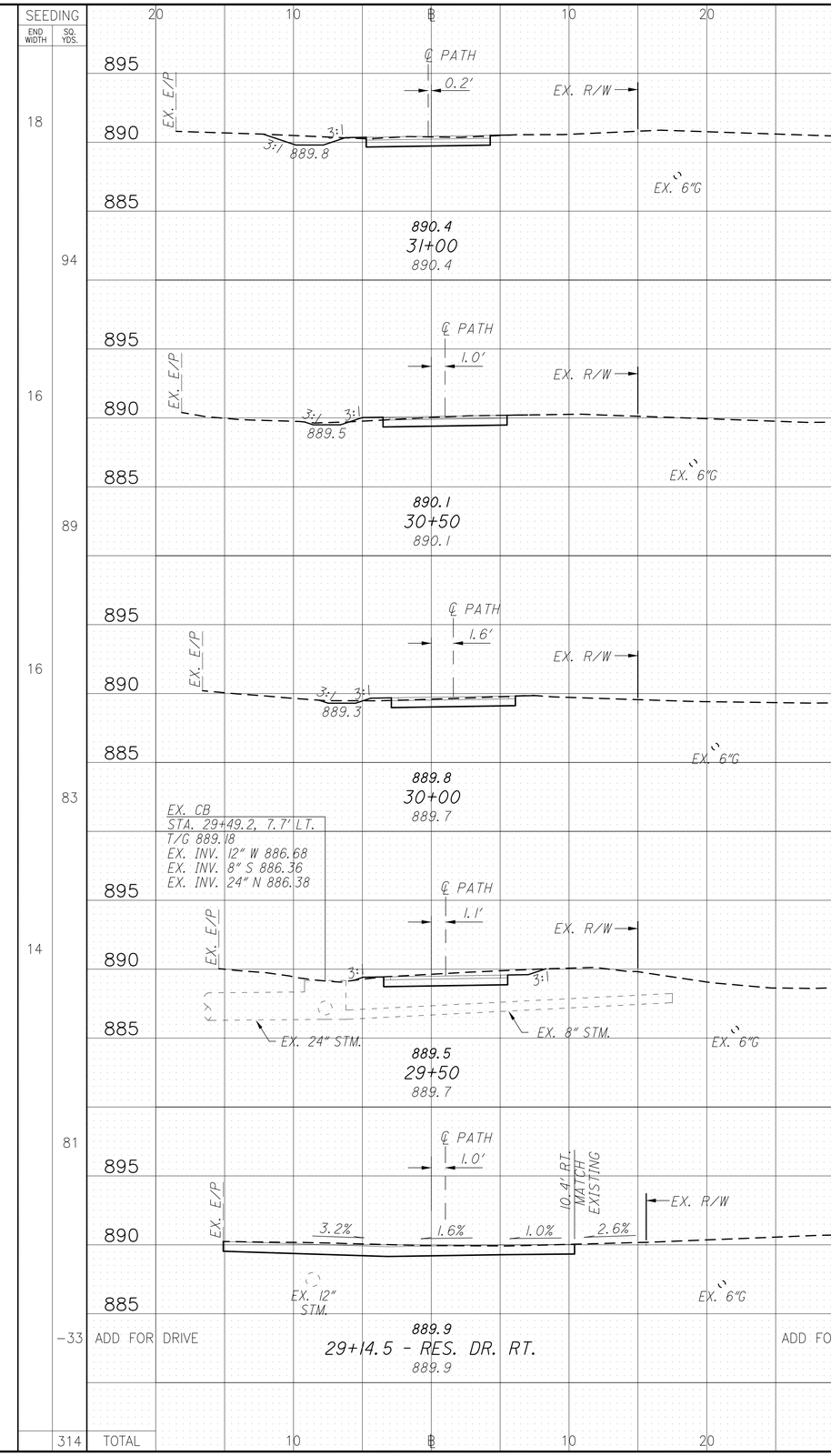

CALCULATED LAM
CHECKED KJG

CROSS SECTIONS - BL "A"
STA. 27+00 TO STA. 31+00

BRAND ROAD
SHARED-USE PATH

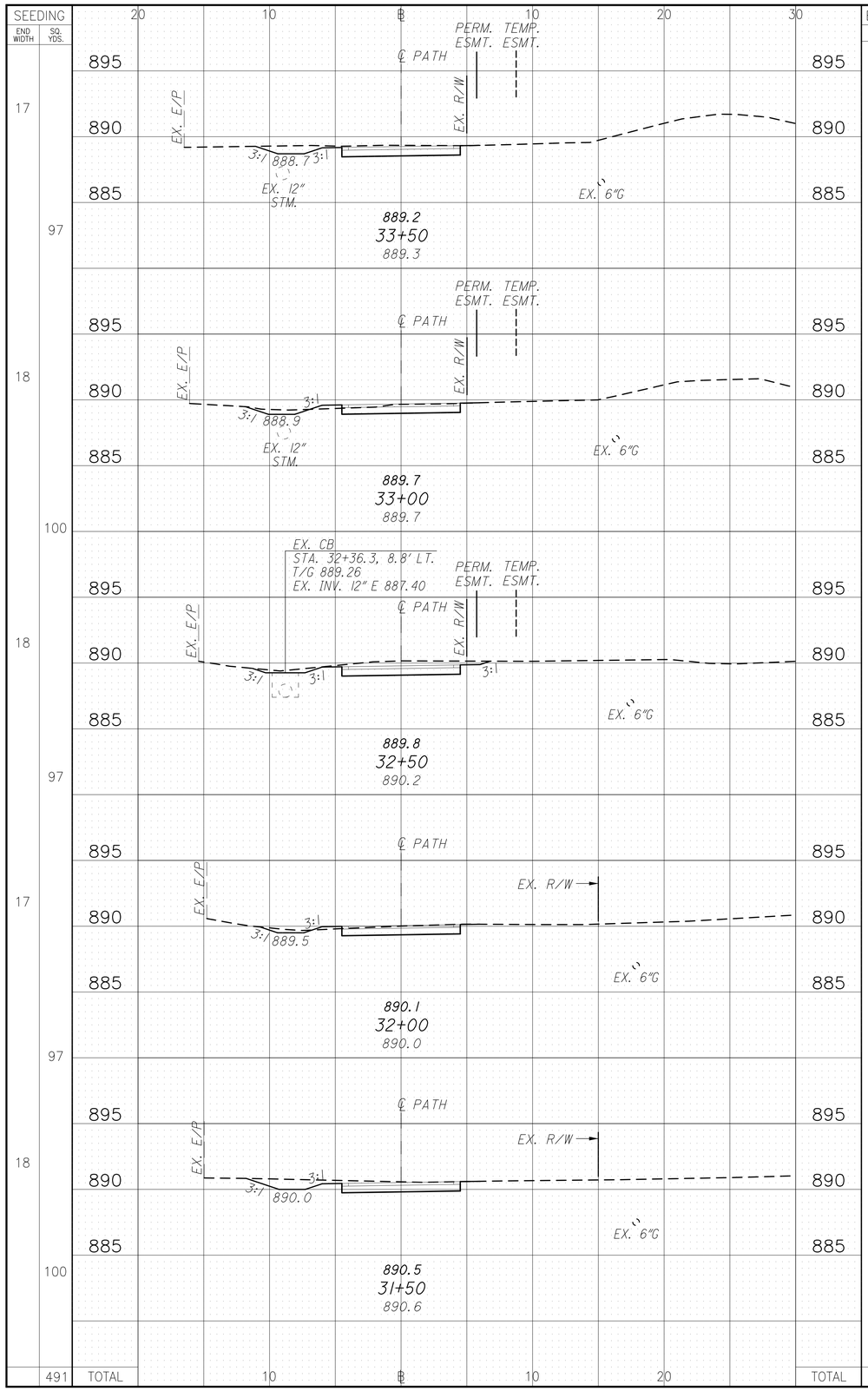

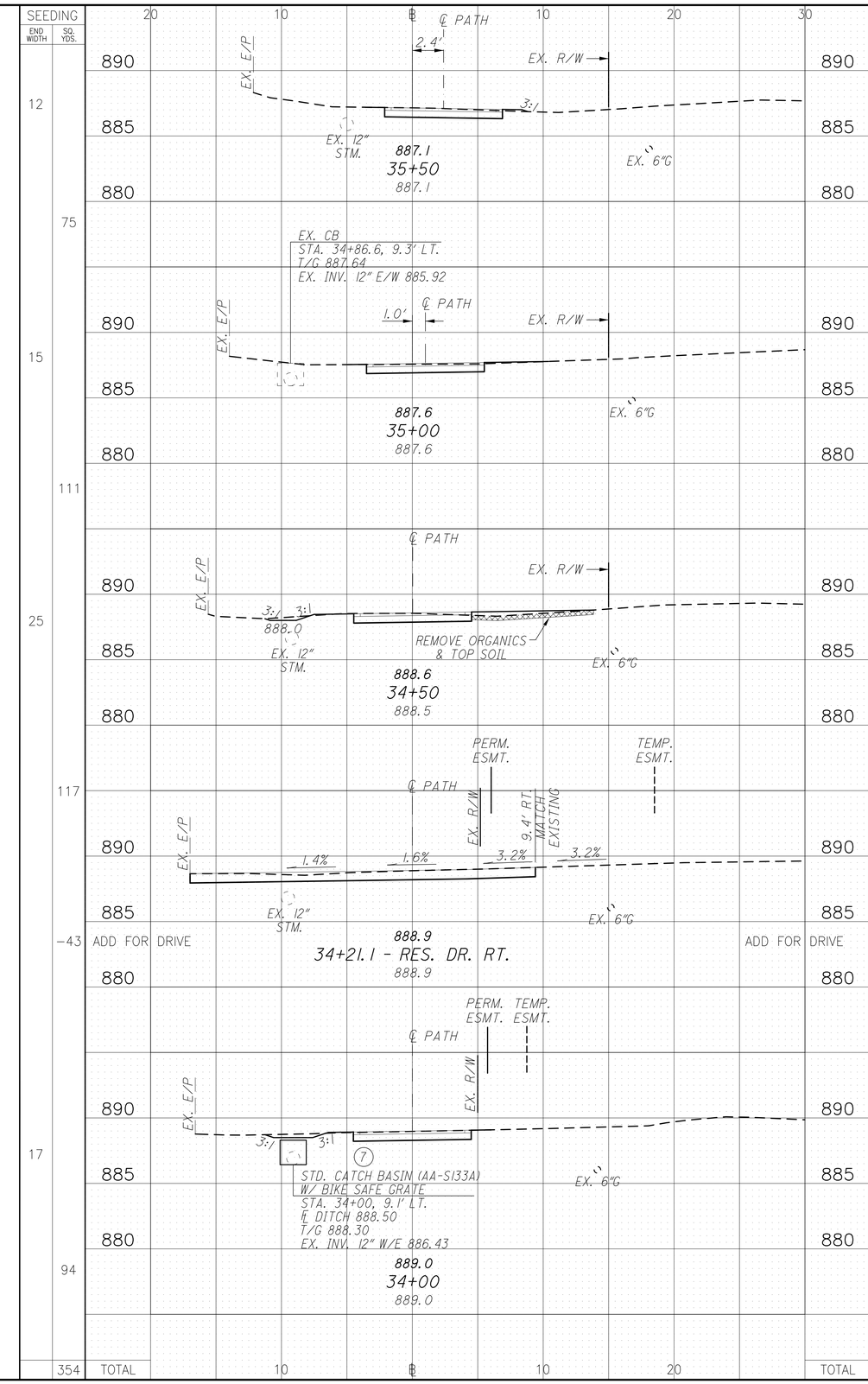

CALCULATED LAM
CHECKED KJG

CROSS SECTIONS - ℄ "A"
STA. 31+50 TO STA. 35+50

BRAND ROAD
SHARED-USE PATH

SEEDING END WIDTH	SEEDING SQ. YDS.	STATION	END AREA CUT	END AREA FILL	VOLUME CUT	VOLUME FILL
21		887.6 38+00 887.4	11	1		
19	111	886.9 37+50 886.9	11	0	20	1
26	125	887.2 37+00 887.0	13	11	22	10
33	164	888.0 36+50 886.1	11	56	22	62
33	4	STA. 36+49 AHEAD / STA. 36+49 BACK	11	56	1	2
0		STA. 36+49 AHEAD / STA. 36+49 BACK	0	0		
0		STA. 36+24 AHEAD / STA. 36+24 BACK	0	0		
38		STA. 36+24 AHEAD / STA. 36+24 BACK	12	65		
38	101	887.6 36+00 887.0	18	20	13	38
	139				25	19
	644	TOTAL			103	132

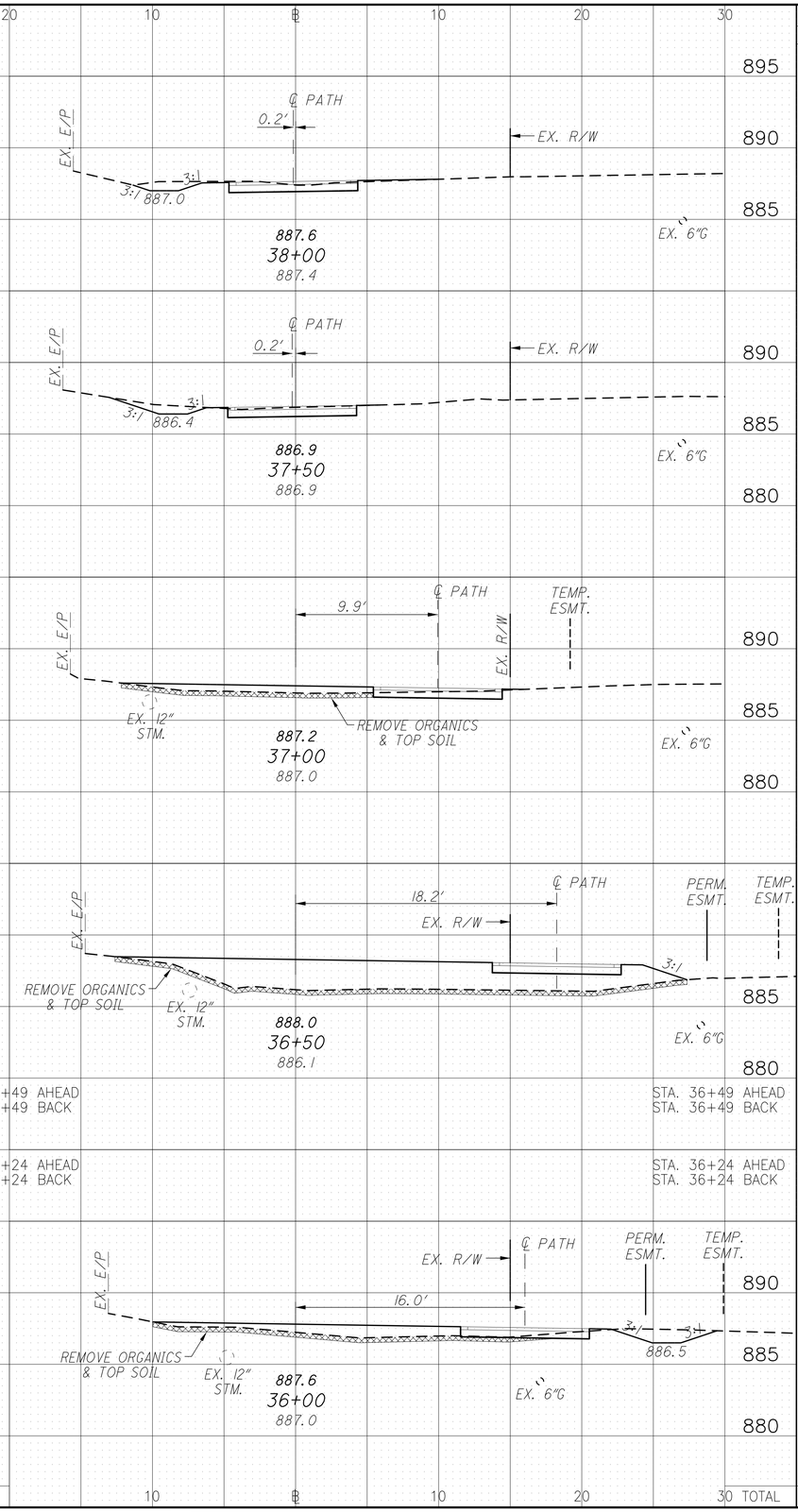

SEEDING END WIDTH	SEEDING SQ. YDS.	STATION	END AREA CUT	END AREA FILL	VOLUME CUT	VOLUME FILL
14	81	888.0 40+00 888.0	10	1	19	4
15	78	888.5 39+50 888.5	11	3	19	4
13	189	888.1 39+00 888.0	9	1	37	4
	−27	ADD FOR DRIVE 888.6 38+44.7 - RES. DR. RT. 888.6 ADD FOR DRIVE			7	−1
	321	TOTAL			82	11

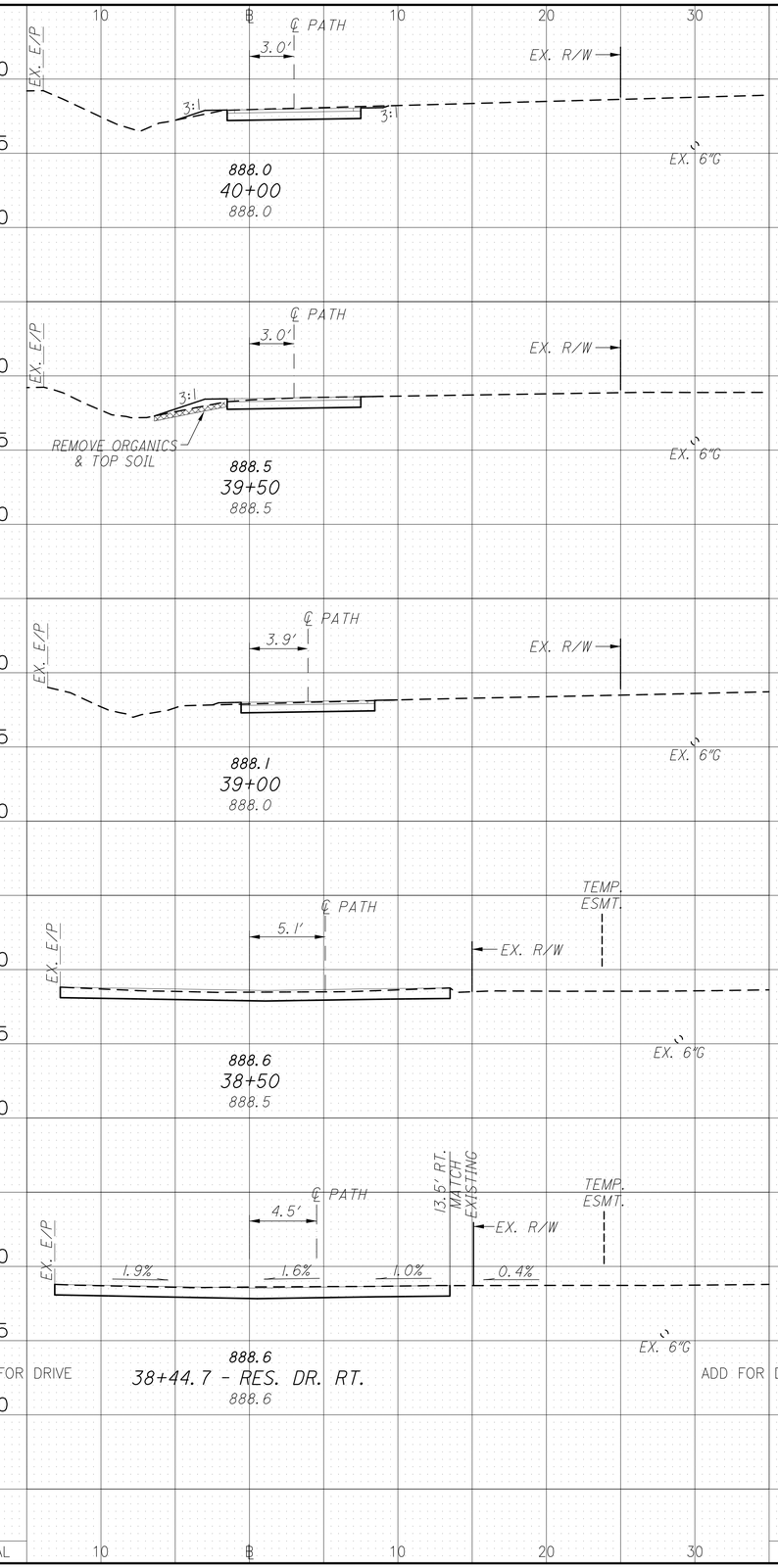

CALCULATED LAM
CHECKED KJG

CROSS SECTIONS - ℄ "A"
STA. 36+00 TO STA. 40+00

BRAND ROAD
SHARED-USE PATH

SEEDING END WIDTH	SEEDING SQ. YDS.		END AREA CUT	END AREA FILL	VOLUME CUT	VOLUME FILL
0		STA. 42+23 AHEAD	0	0		
16		STA. 42+23 BACK	9	0		
	41				8	0
16			9	0		
	144				26	10
36			19	11		
	136				25	11
13			8	1		
	69				17	1
12			10	0		
	72				19	1
	462	TOTAL			95	23

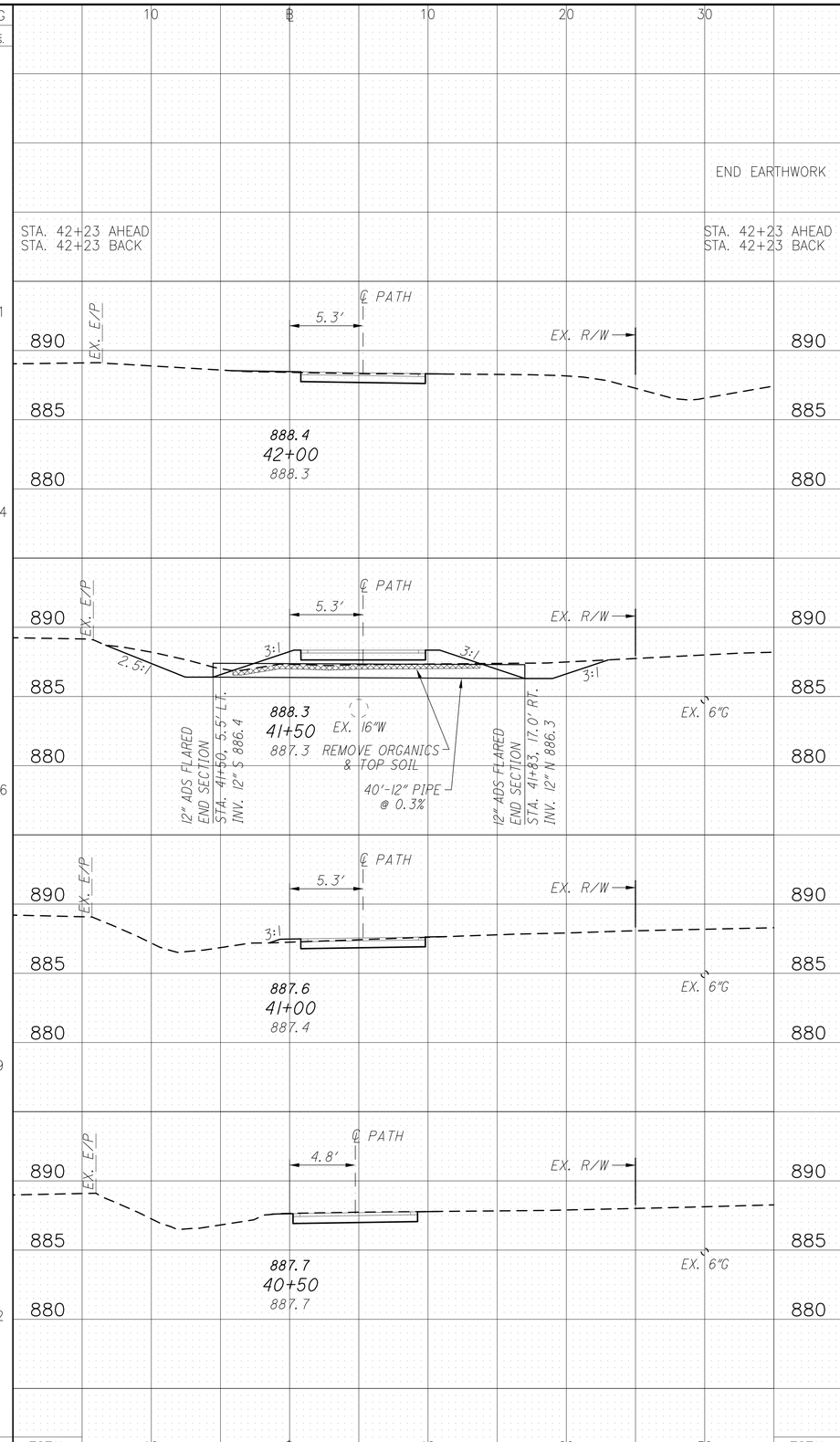

SEEDING END WIDTH	SEEDING SQ. YDS.		END AREA CUT	END AREA FILL	VOLUME CUT	VOLUME FILL
		TOTAL				

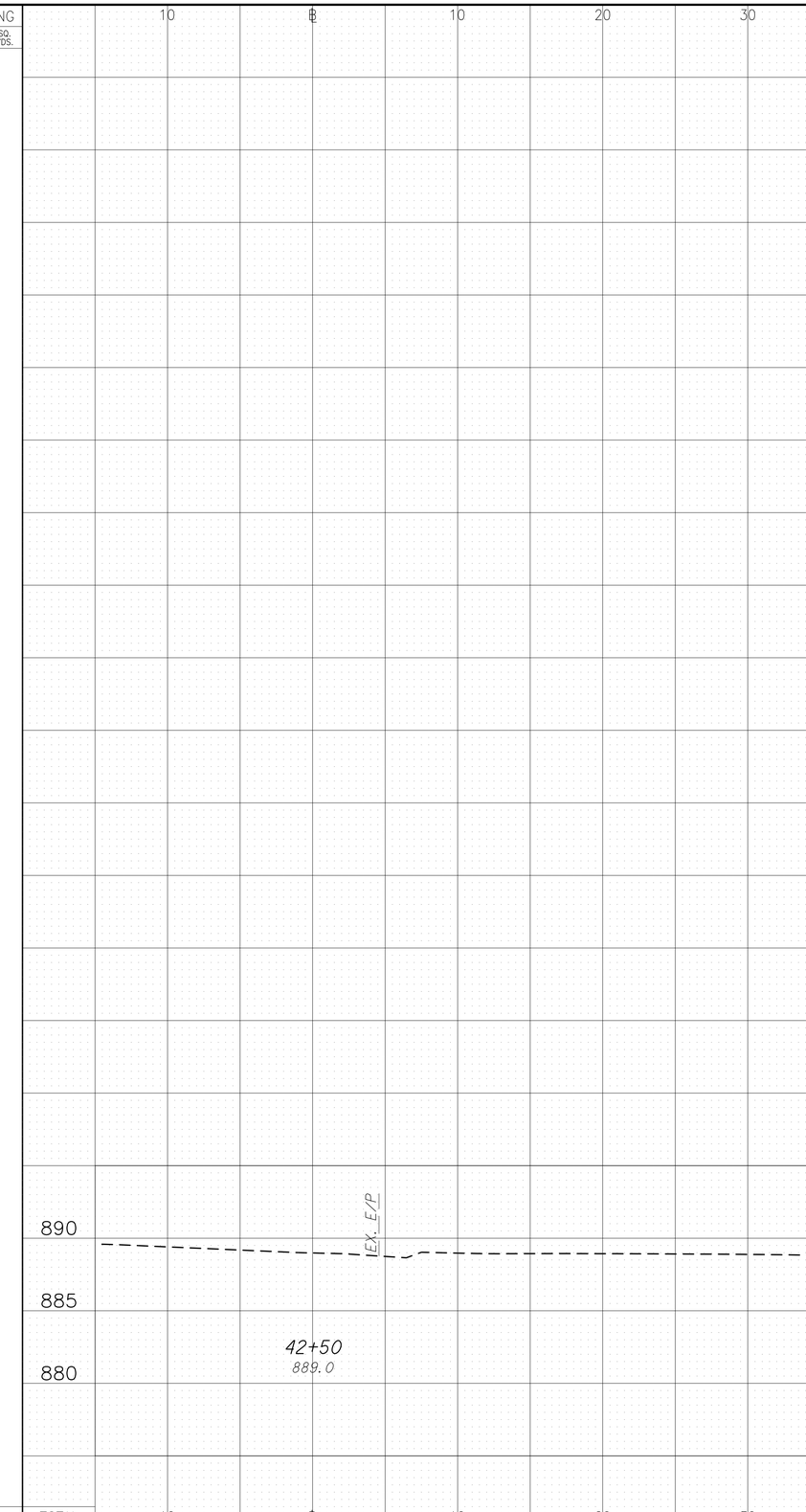

CALCULATED LAM
CHECKED KJG

CROSS SECTIONS - ℄ "A"
STA. 40+50 TO STA. 42+50

BRAND ROAD
SHARED-USE PATH

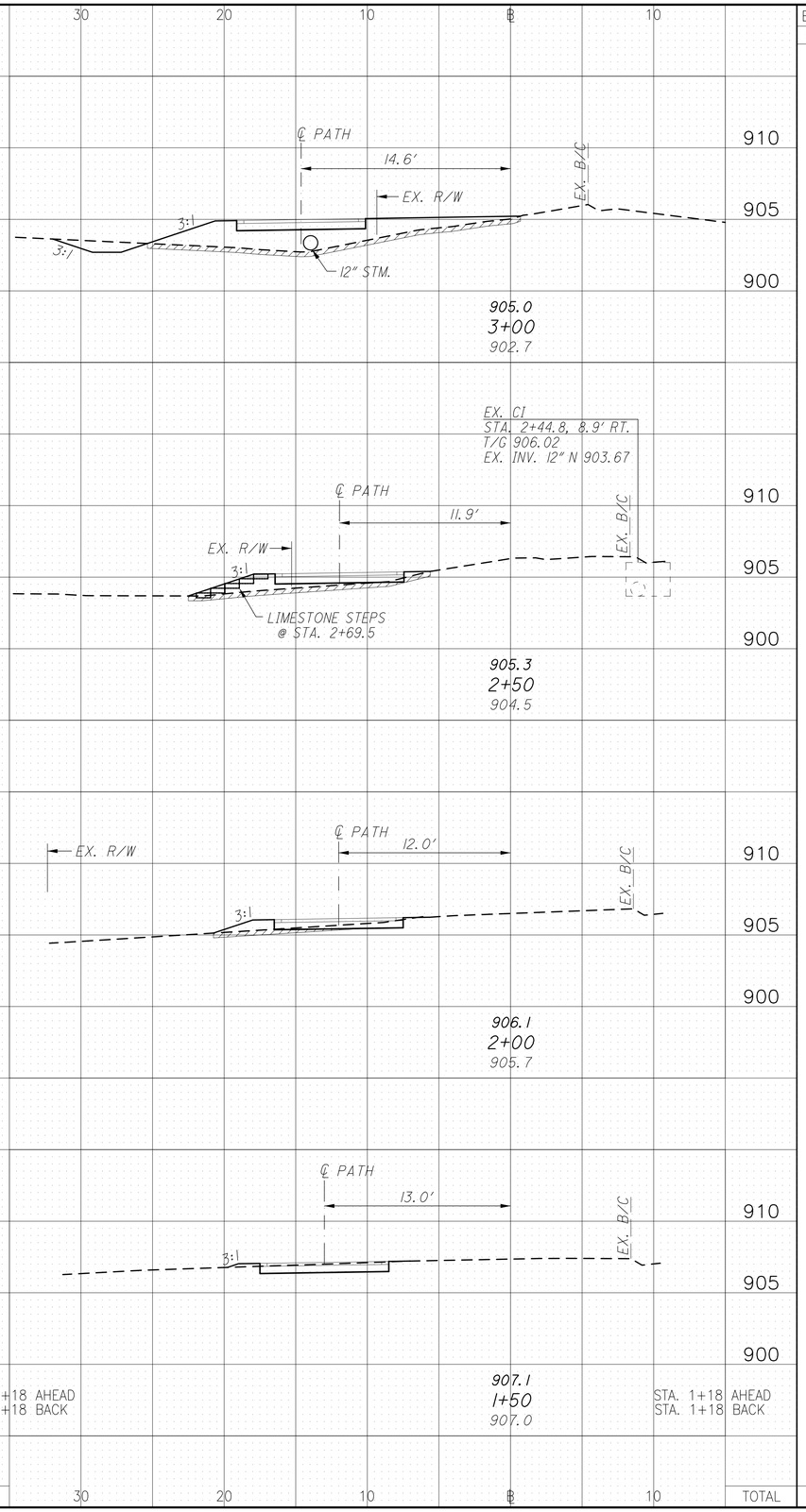

SEEDING END WIDTH	SEEDING SQ. YDS.	END AREA CUT	END AREA FILL	VOLUME CUT	VOLUME FILL
33		12	33		
	139			19	42
17		8	12		
	89			14	16
15		7	5		
	78			14	6
13		8	1		
	47			9	1
13 0		8 0	1 0		
	353			56	65

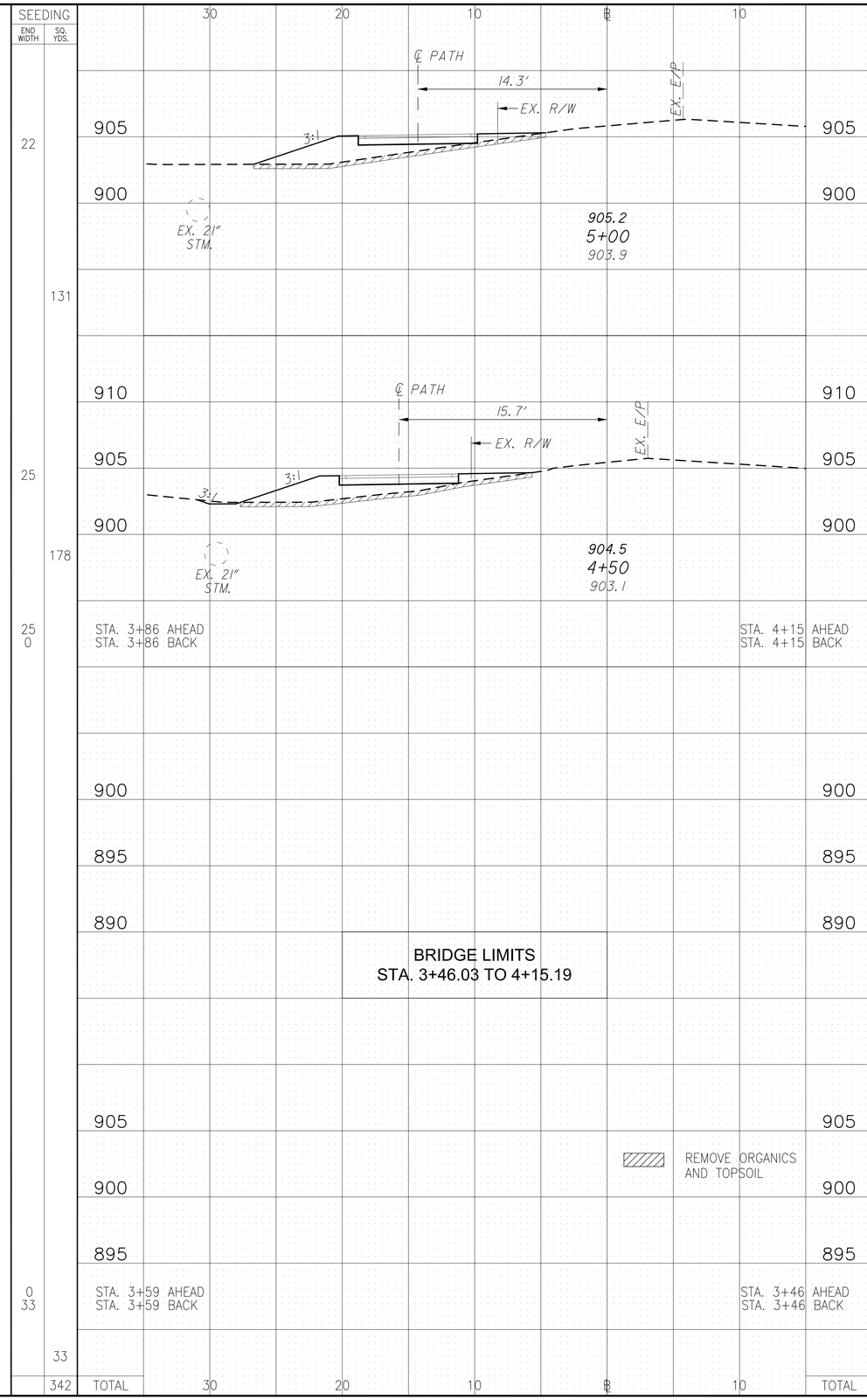

SEEDING END WIDTH	SEEDING SQ. YDS.	END AREA CUT	END AREA FILL	VOLUME CUT	VOLUME FILL
22		7	21		
	131			14	39
25		8	21		
	178			10	27
25 0		8 0	21 0		
0 33		0 12	0 33		
	33			20	56
	342			44	122

CALCULATED LAM
CHECKED KJG

CROSS SECTIONS - ℄ "C"
STA. 1+50 TO STA. 5+00

BRAND ROAD
SHARED-USE PATH

SEEDING END WIDTH	SEEDING SQ. YDS.		END AREA CUT	END AREA FILL	VOLUME CUT	VOLUME FILL
0		STA. 6+52 AHEAD / STA. 6+52 BACK	0	0		
12			9	0		
	2				1	0
12			9	0		
	37				9	0
12		STA. 6+23 AHEAD / STA. 6+23 BACK	9	0		
0			0	0		
					0	0
			0	0		
					0	0
0		STA. 5+59 AHEAD / STA. 5+59 BACK	0	0		
17			7	4		
	16				2	1
17			7	4		
	108				13	23
	163	TOTAL			25	24

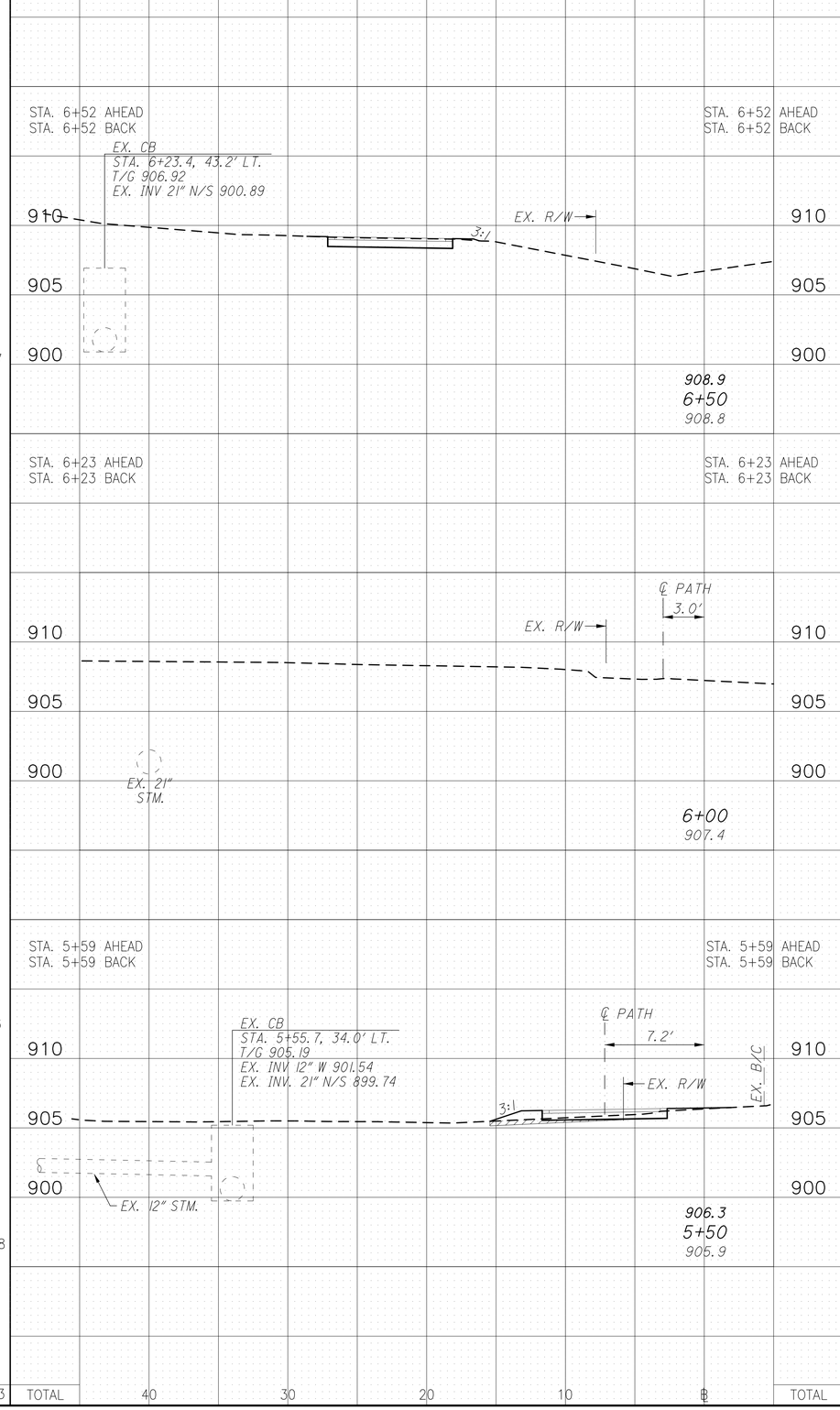

SEEDING END WIDTH	SEEDING SQ. YDS.	END AREA CUT	END AREA FILL	VOLUME CUT	VOLUME FILL
TOTAL					TOTAL

ITEM 203	EXCAVATION	1603 CU. YD.
ITEM 203	EMBANKMENT	468 CU. YD.
ITEM 659	SEEDING & MULCHING	7188 SQ. YD.

TOTALS CARRIED TO GENERAL SUMMARY

REMOVE ORGANICS AND TOPSOIL

CALCULATED LAM
CHECKED KJG

CROSS SECTIONS - ℄ "C"
STA. 5+50 TO STA. 6+50

BRAND ROAD
SHARED-USE PATH

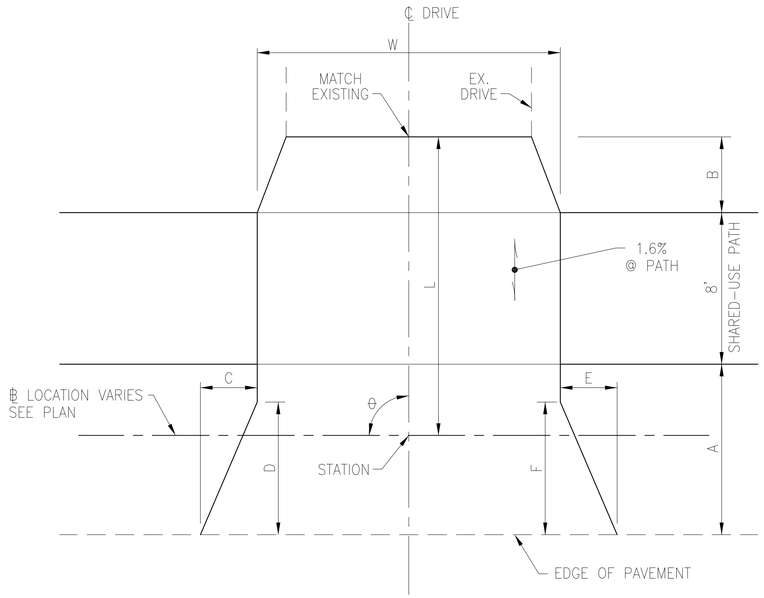

DRIVE DETAIL

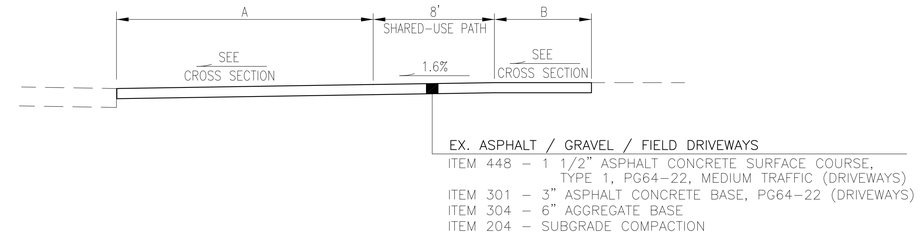

DRIVE PROFILE

REF. NO.	SHT. NO.	STATION	SIDE	SERVICE TYPE	DRIVE COMPOSITION	θ	W	L	A	B	C	D	E	F	DRIVE AREA	204 SUBGRADE COMPACTION	301 3" ASPHALT CONCRETE BASE, PG64-22 (DRIVEWAYS)	304 6" AGGREGATE BASE	448 1 1/2" ASPHALT CONCRETE SURFACE COURSE, TYPE 1, PG64-22, MEDIUM TRAFFIC (DRIVEWAYS)
															SQ FT	SQ YD	TON	CU YD	TON
DR1	9	7+84.2	RT.			NO WORK													
DR2	10	9+93.7	RT.	RES.	ASPHALT	73°	12'	11.5'	10.3'	5.0'	10'	19.1'	5'	10.0'	405	45.0	7.5	7.5	3.8
DR3	10	12+05.3	RT.	RES.	ASPHALT	86°	12'	11.0'	11.3'	5.0'	10'	11.0'	5'	7.0'	358	39.8	6.6	6.6	3.3
DR4	10	13+73.8	RT.	RES.	ASPHALT	90°	18'	19.0'	10.5'	10.0'	5'	7.0'	3'	7.0'	539	59.9	10.0	10.0	5.0
DR5	11	14+23.2	RT.	RES.	ASPHALT	90°	12'	20.0'	10.6'	9.0'	8'	10.5'	7'	10.5'	402	44.7	7.4	7.4	3.7
DR6	11	16+90.3	RT.	RES.	ASPHALT	65°	16'	13.0'	10.0'	8.5'	6'	10.8'	3'	7.0'	518	57.6	9.6	9.6	4.8
DR7	12	22+90.3	RT.	RES.	GRAVEL	90°	26'	23.9'	19.3'	5.0'	7'	8.0'	7'	8.0'	898	99.8	16.6	16.6	8.3
DR8	13	24+35.4	RT.	RES.	ASPHALT	78°	12'	11.4'	11.3'	5.0'	4'	9.0'	5'	9.0'	333	37.0	6.2	6.2	3.1
DR9	13	26+91.5	RT.	RES.	GRAVEL	76°	16'	10.3'	10.5'	5.0'	11'	10.8'	13'	10.8'	516	57.3	9.6	9.6	4.8
DR10	14	29+14.5	RT.	RES.	FIELD	74°	18'	10.4'	11.5'	5.0'	12'	12.0'	5'	11.9'	561	62.3	10.4	10.4	5.2
DR11	15	34+21.1	RT.	RES.	GRAVEL	74°	13'	9.4'	12.4'	5.0'	12'	12.7'	10'	12.7'	483	53.7	8.9	8.9	4.5
DR12	16	38+44.7	RT.	RES.	ASPHALT	84°	12'	13.5'	13.7'	5.0'	12'	13.0'	9'	10.0'	439	48.8	8.1	8.1	4.1
															TOTALS	606	101	101	51

CALCULATED LAM
CHECKED KJG

DRIVE DETAILS

BRAND ROAD
SHARED-USE PATH

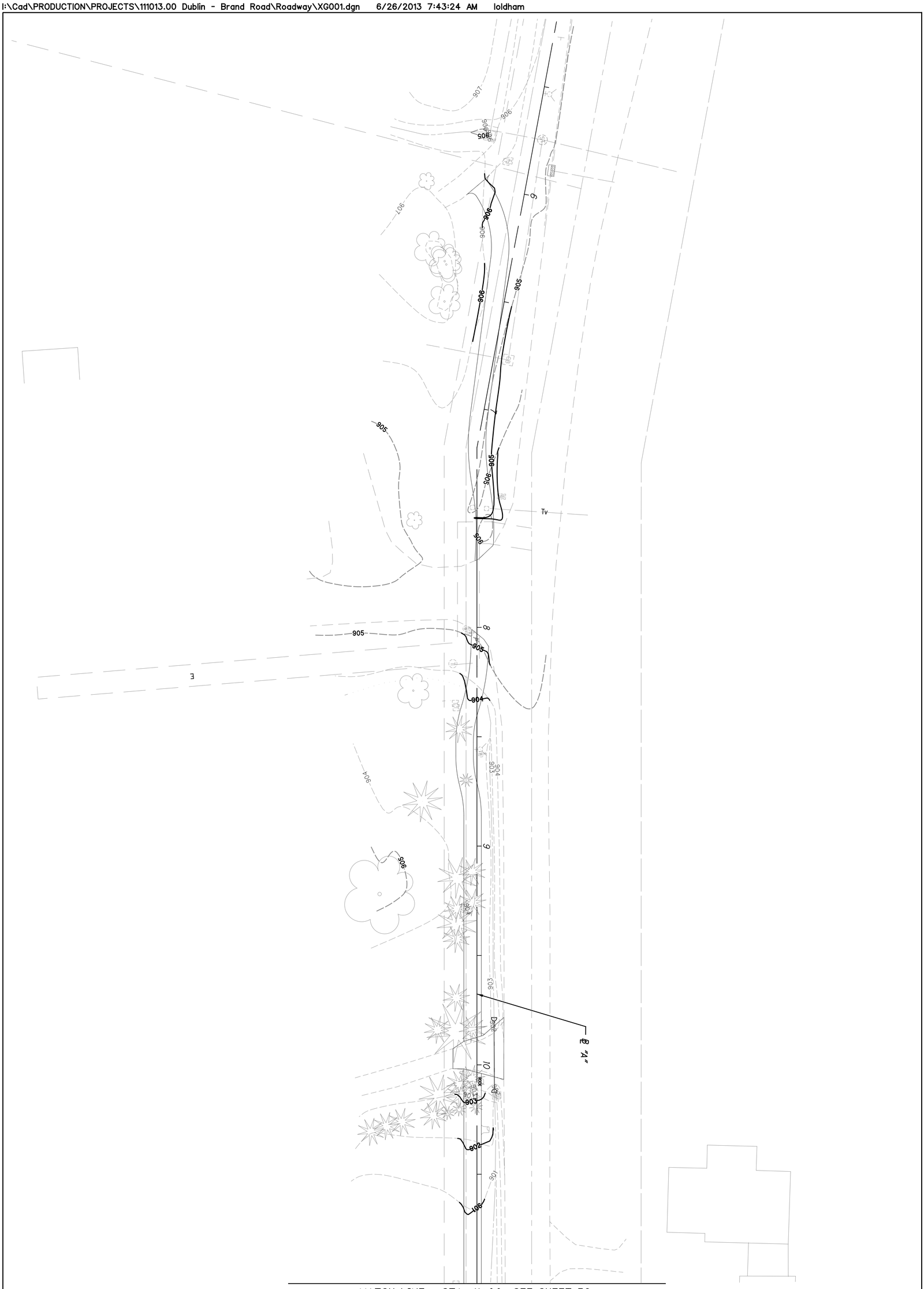

31 / 49	BRAND ROAD SHARED-USE PATH	GRADING PLAN - ℄ "A" STA. 5+50 TO STA. 11+00	CALCULATED LAM CHECKED KJG	0 10 20 40 HORIZONTAL SCALE IN FEET

I:\Cad\PRODUCTION\PROJECTS\111013.00 Dublin - Brand Road\Roadway\XG002.dgn 6/26/2013 7:45:37 AM loldham

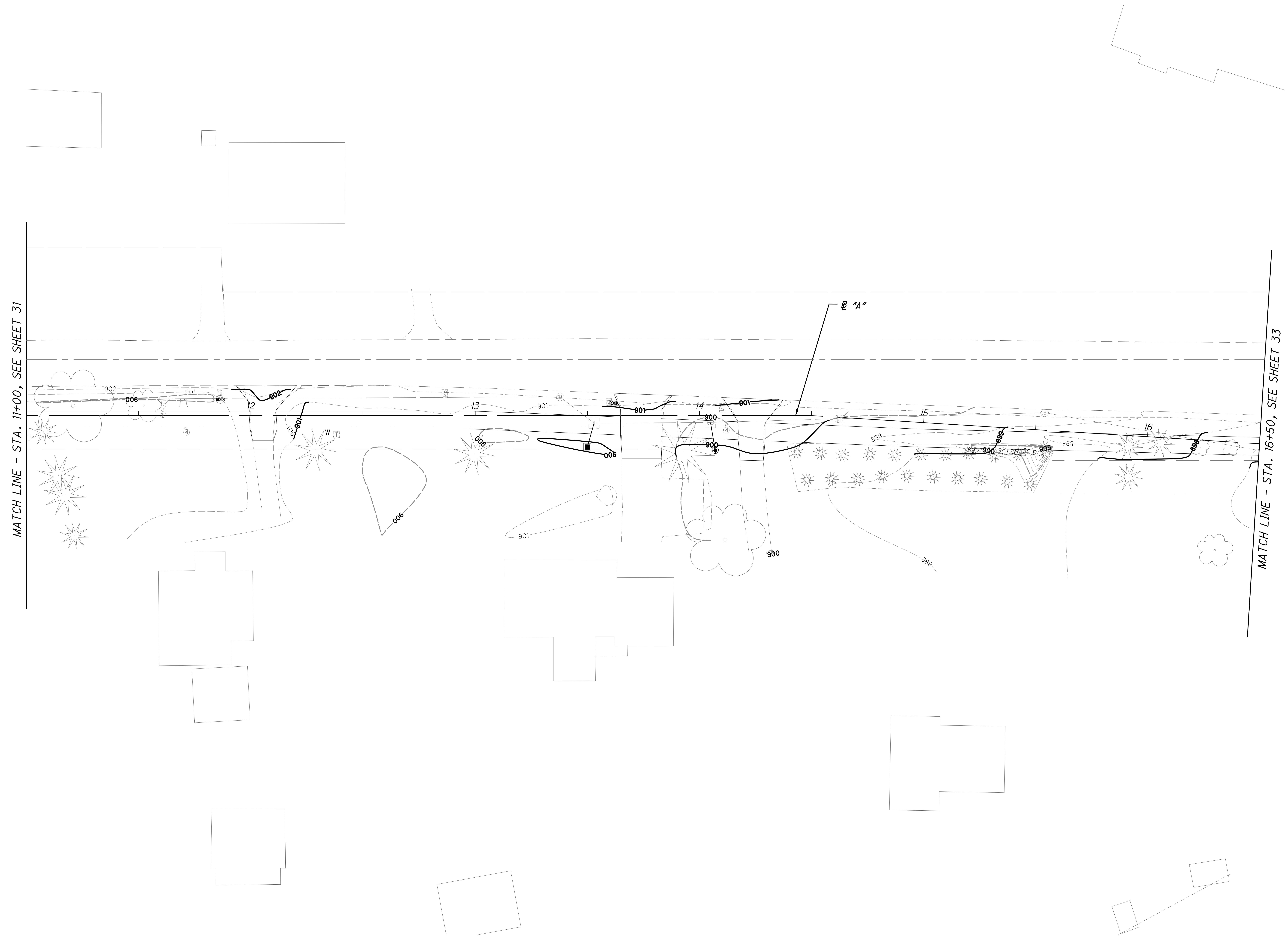

GRADING PLAN - ℄ "A"
STA. 11+00 TO STA. 16+50

HORIZONTAL SCALE IN FEET (0 10 20 40)

CALCULATED LAM
CHECKED KJG

BRAND ROAD
SHARED-USE PATH

I:\Cad\PRODUCTION\PROJECTS\111013.00 Dublin - Brand Road\Roadway\XG003.dgn 6/26/2013 7:46:48 AM loldham

33 / 46	BRAND ROAD SHARED-USE PATH	GRADING PLAN - ℄ "A" STA. 16+50 TO STA. 22+00	CALCULATED LAM CHECKED KJG	0 10 20 40 HORIZONTAL SCALE IN FEET

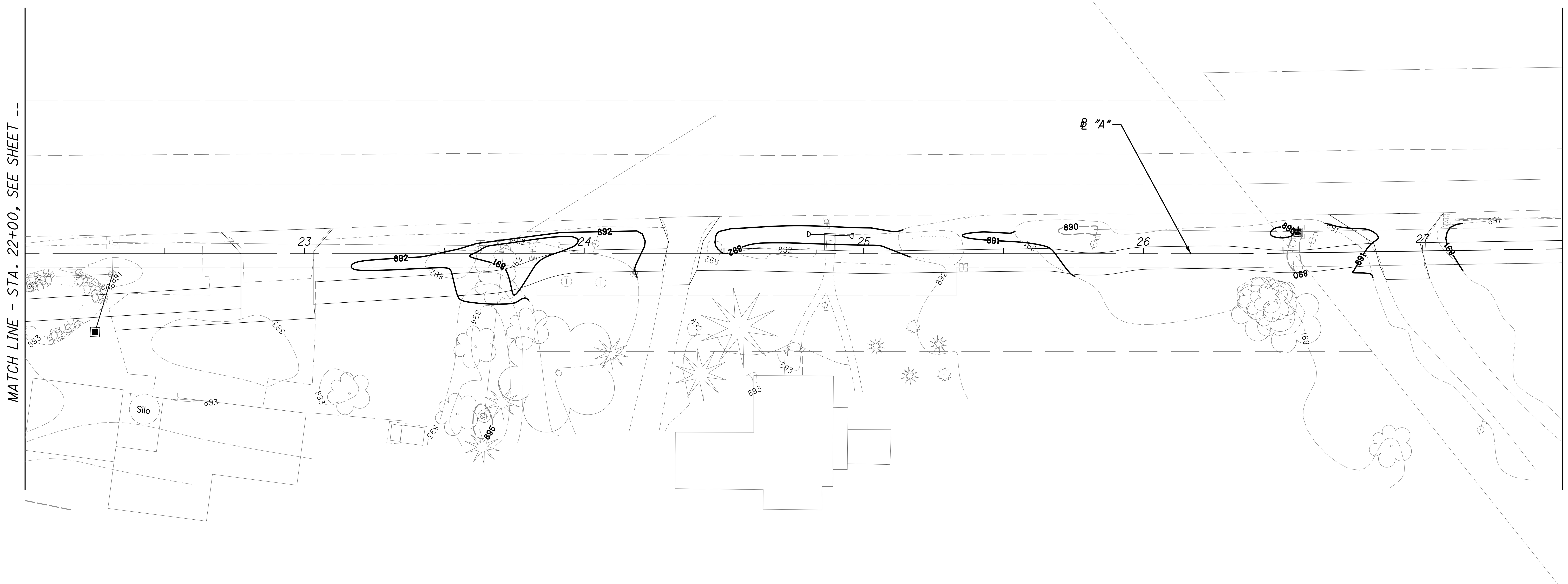

GRADING PLAN - ℄ "A"
STA. 22+00 TO STA. 27+50

BRAND ROAD
SHARED-USE PATH

HORIZONTAL SCALE IN FEET (0, 10, 20, 40)

CALCULATED LAM
CHECKED KJG

I:\Cad\PRODUCTION\PROJECTS\111013.00 Dublin - Brand Road\Roadway\XG004.dgn 6/26/2013 7:47:46 AM loldham

I:\Cad\PRODUCTION\PROJECTS\111013.00 Dublin - Brand Road\Roadway\XG005.dgn 6/26/2013 7:49:04 AM loldham

35 / 46	BRAND ROAD SHARED-USE PATH	**GRADING PLAN - ℄ "A"** **STA. 27+50 TO STA. 33+00**	CALCULATED LAM CHECKED KJG	0 10 20 40 HORIZONTAL SCALE IN FEET

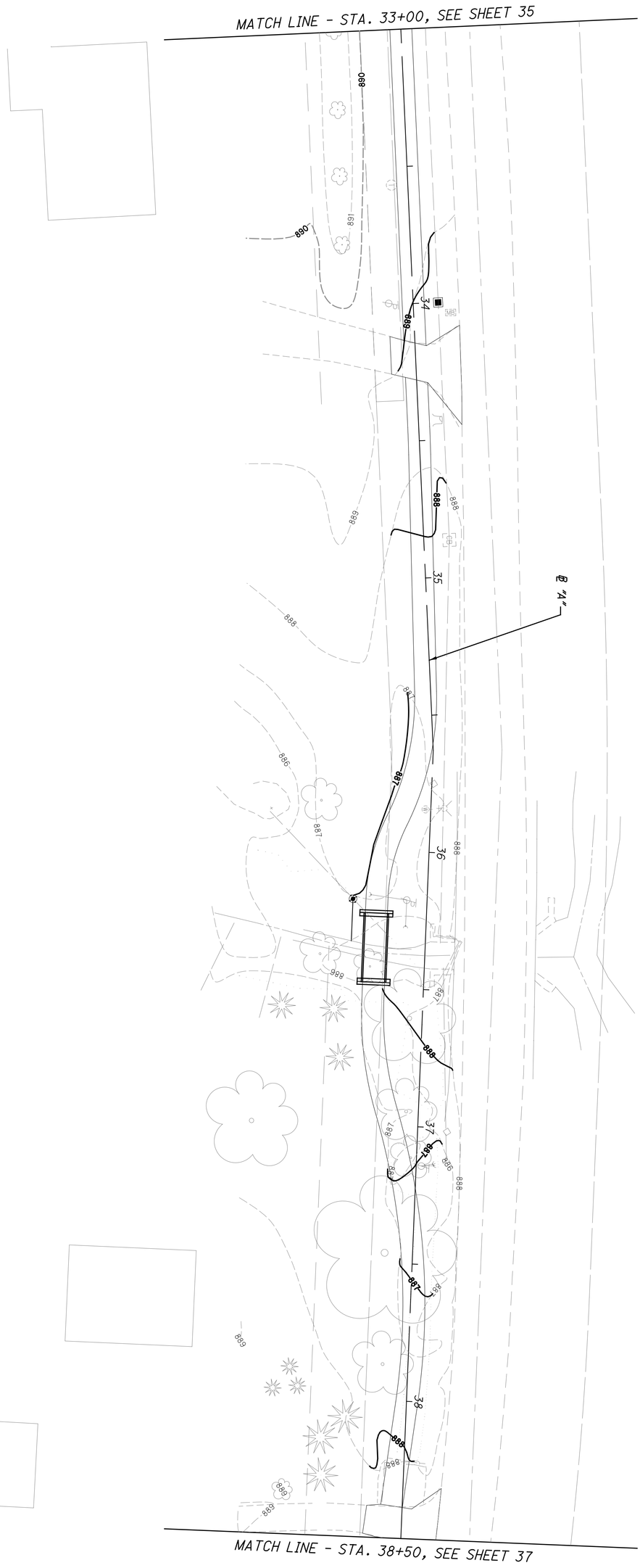

36 / 49	BRAND ROAD SHARED-USE PATH	**GRADING PLAN - ℄ "A"** **STA. 33+00 TO STA. 38+50**	CALCULATED LAM CHECKED KJG	0 10 20 40 HORIZONTAL SCALE IN FEET

I:\Cad\PRODUCTION\PROJECTS\111013.00 Dublin - Brand Road\Roadway\XG007.dgn 6/26/2013 7:29:49 AM loldham

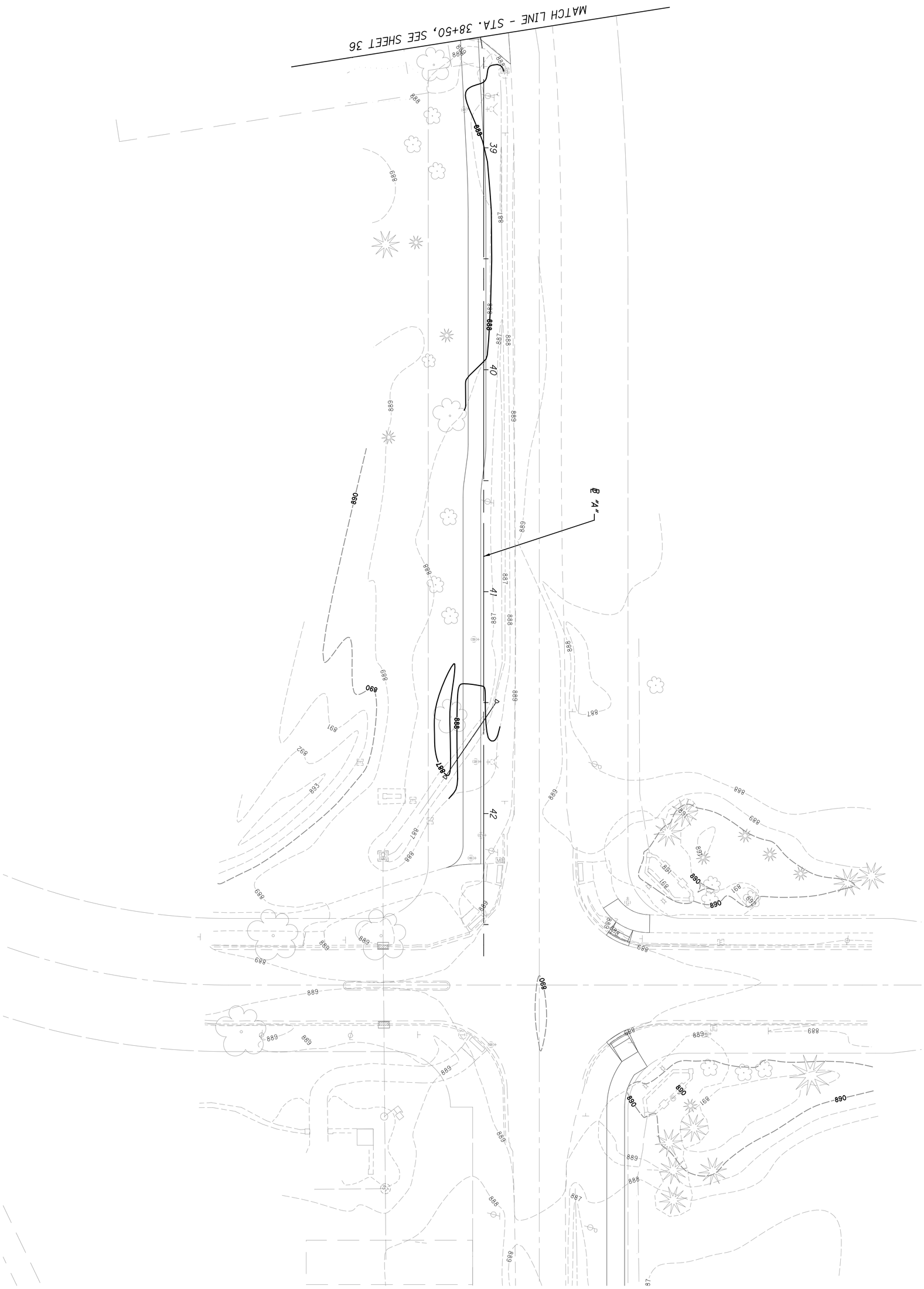

37 / 46	BRAND ROAD SHARED-USE PATH	GRADING PLAN - ℄ "A" STA. 38+50 TO STA. 42+50	CALCULATED LAM CHECKED KJG	0 10 20 40 HORIZONTAL SCALE IN FEET

I:\Cad\PRODUCTION\PROJECTS\111013.00 Dublin - Brand Road\Roadway\XG008.dgn 6/26/2013 7:50:57 AM loldham

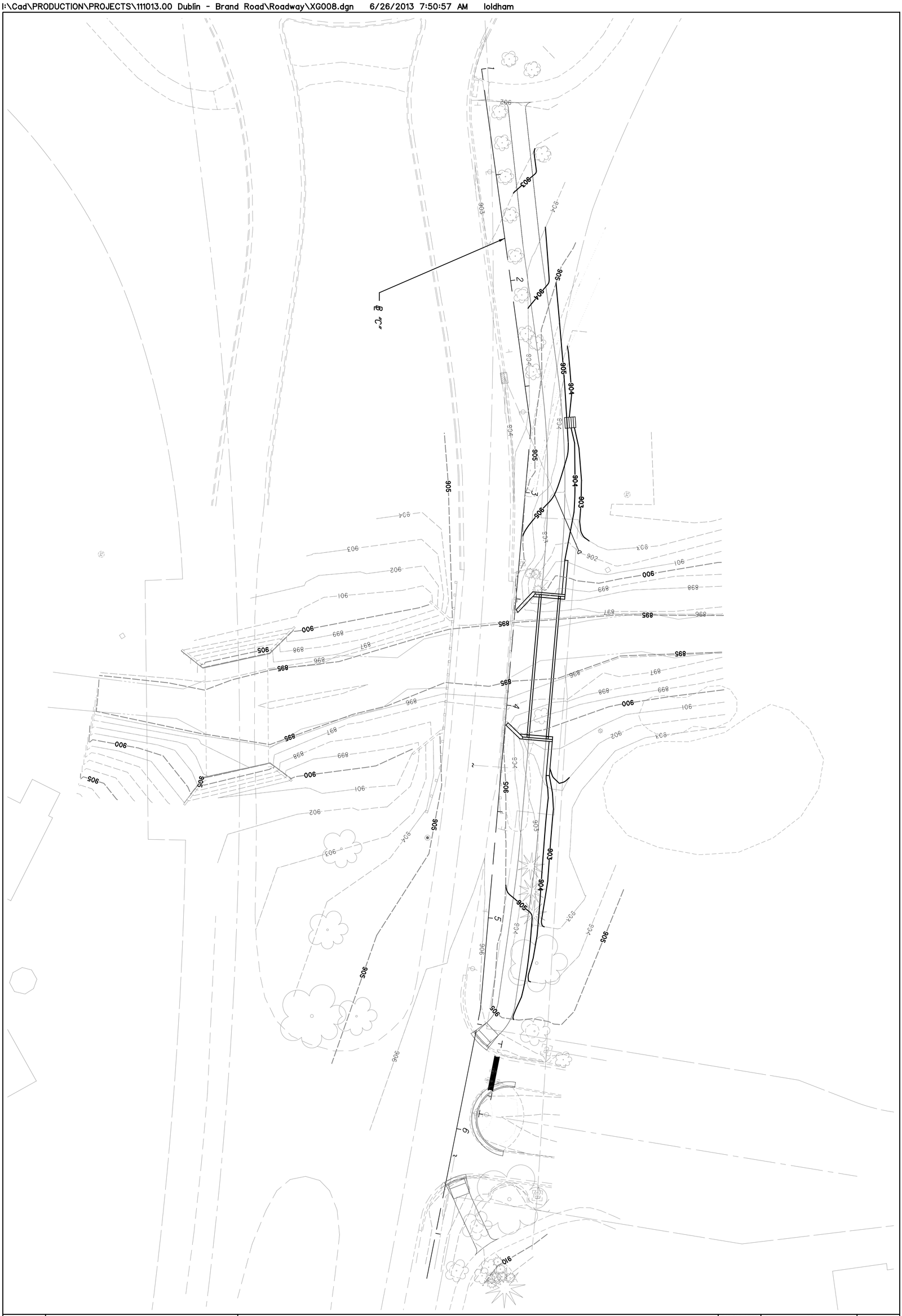

38
46

BRAND ROAD
SHARED-USE PATH

GRADING PLAN - ℄ "C"
STA. 1+00 TO STA. 6+50

CALCULATED LAM
CHECKED KJG

0 10 20 40
HORIZONTAL SCALE IN FEET

N

DESIGN SPECIFICATIONS:

THIS STRUCTURE CONFORMS TO THE "LRFD BRIDGE DESIGN SPECIFICATIONS" ADOPTED BY THE AMERICAN ASSOCIATION OF STATE HIGHWAY AND TRANSPORTATION OFFICIALS, 2012, INCLUDING ANY INTERIM SPECIFICATIONS AND ODOT BRIDGE DESIGN MANUAL, 2007.

DESIGN LOADING:

DESIGN LOADING: 0.085 KIPS/SQ.FT PEDESTRIAN LOADING AND 8.0 KIP VEHICLE

DESIGN STRESSES:

CAST-IN-PLACE STRUCTURES
CONCRETE CLASS C – COMPRESSIVE STRENGTH 4000 PSI
REINFORCING STEEL – ASTM A615 OR A996 GRADE 60, MINIMUM YIELD STRENGTH 60000 PSI

CONSTRUCTION CONSTRAINTS

FILL THE VOID CREATED BY EXCAVATING FOR THE ABUTMENT FOOTINGS WITH TYPE B GRANULAR MATERIAL, 703.16.C. AFTER THE FOOTING AND THE BREASTWALL HAVE BEEN CONSTRUCTED, FILL THE VOID BEHIND EACH ABUTMENT UP TO THE BEAM SEAT ELEVATION AND FROM THE BEAM SEAT UP ON A 1:1 SLOPE TO THE SUBGRADE ELEVATION PRIOR TO CONSTRUCTING THE BACKWALL AND SETTING THE TRUSSES ON THE ABUTMENT.

ITEM 203 EMBANKMENT, AS PER PLAN

PLACE AND COMPACT EMBANKMENT MATERIAL IN 6 INCH LIFTS FOR THE CONSTRUCTION OF THE APPROACH EMBANKMENT.

FOUNDATION BEARING RESISTANCE

SHARED-USE PATH BRIDGE OVER NORTH FORK INDIAN RUN ALONG MUIRFIELD DRIVE:
SPREAD FOOTINGS, AS DESIGNED, PRODUCE A MAXIMUM SERVICE LOAD PRESSURE OF 3.0 KIPS PER SQUARE FOOT AND A MAXIMUM STRENGTH LOAD PRESSURE OF 4.0 KIPS PER SQUARE FOOT. THE FACTORED BEARING RESISTANCE IS 22.0 KIPS PER SQUARE FOOT.

SHARED-USE PATH BRIDGE OVER BEAR RUN ALONG BRAND ROAD:
SPREAD FOOTINGS, AS DESIGNED, PRODUCE A MAXIMUM SERVICE LOAD PRESSURE OF 1.80 KIPS PER SQUARE FOOT AND A MAXIMUM STRENGTH LOAD PRESSURE OF 2.40 KIPS PER SQUARE FOOT. THE FACTORED BEARING RESISTANCE IS 6.5 KIPS PER SQUARE FOOT.

FOOTINGS

FOOTINGS FOR SHARED-USE PATH BRIDGE OVER NORTH FORK INDIAN RUN ALONG MUIRFIELD DRIVE SHALL EXTEND A MINIMUM OF 6 INCHES INTO BEDROCK OR TO THE ELEVATION SHOWN, WHICHEVER IS LOWER.

EXISTING STRUCTURE VERIFICATION

DETAILS AND DIMENSIONS SHOWN ON THESE PLANS PERTAINING TO THE EXISTING STRUCTURES HAVE BEEN OBTAINED FROM PLANS OF THE EXISTING STRUCTURES AND FROM FIELD OBSERVATIONS. CONSEQUENTLY, THEY ARE INDICATIVE OF THE EXISTING STRUCTURES AND THE PROPOSED WORK BUT THEY SHALL BE CONSIDERED TENTATIVE AND APPROXIMATE. THE CONTRACTOR IS REFERRED TO DUBLIN SECTIONS 102.05 AND 105.02.

CONTRACT BID PRICES SHALL BE BASED UPON A RECOGNITION OF THE UNCERTAINTIES DESCRIBED ABOVE AND UPON A PREBID EXAMINATION OF THE EXISTING STRUCTURES BY THE CONTRACTOR. HOWEVER, ALL PROJECT WORK SHALL BE BASED UPON ACTUAL DETAILS AND DIMENSIONS WHICH HAVE BEEN VERIFIED BY THE CONTRACTOR IN THE FIELD.

EXISTING BRIDGE PLANS MAY BE INSPECTED IN THE CITY OF DUBLIN.

DEMOLITION AND CONSTRUCTION: IN REMOVING EXISTING MATERIAL, THE CONTRACTOR SHALL EXERCISE CARE TO PREVENT DAMAGE TO THOSE PARTS OF THE STRUCTURES WHICH ARE TO REMAIN IN PLACE. ANY PORTION OF THE STRUCTURES DAMAGED DURING DEMOLITION AND CONSTRUCTION BY THE CONTRACTOR'S OPERATIONS SHALL BE REPAIRED OR REPLACED BY THE CONTRACTOR AT HIS OWN EXPENSE AND TO THE SATISFACTION OF THE ENGINEER.

ITEM 202, PORTIONS OF STRUCTURE REMOVED, AS PER PLAN
(MUIRFIELD DRIVE BRIDGE)

DESCRIPTION: THIS WORK CONSISTS OF THE REMOVAL OF PORTIONS OF THE NORTH WINGWALLS OF MUIRFIELD DRIVE BRIDGE. THE PROVISIONS OF ITEM 202 APPLY EXCEPT AS SPECIFIED BY THE FOLLOWING NOTES. PERFORM WORK CAREFULLY DURING REMOVAL TO PROTECT PORTIONS OF SUCH SYSTEMS THAT ARE TO BE SALVAGED/INCORPORATED INTO THE PROPOSED STRUCTURE.

SUBSTRUCTURE CONCRETE REMOVAL: REMOVE CONCRETE BY MEANS OF APPROVED PNEUMATIC HAMMERS EMPLOYING POINTED AND BLUNT CHISEL TOOLS. HYDRAULIC HOE-RAM TYPE HAMMERS WILL NOT BE PERMITTED. THE WEIGHT OF THE HAMMER SHALL NOT BE MORE THAN 35 POUNDS FOR REMOVAL WITHIN 18 INCHES OF PORTIONS TO BE PRESERVED. OUTSIDE THE 18 INCH LIMIT, THE CONTRACTOR MAY USE HAMMERS NOT EXCEEDING 90 POUNDS UPON THE APPROVAL OF THE ENGINEER. DO NOT PLACE PNEUMATIC HAMMERS IN DIRECT CONTACT WITH REINFORCING STEEL THAT IS TO BE RETAINED IN THE REBUILT STRUCTURE.

REPLACE OR REPAIR STRUCTURAL MEMBERS DAMAGED BY THE REMOVAL OPERATIONS AT NO EXTRA COST TO THE PROJECT. AT LEAST 7 DAYS BEFORE PERFORMING REPAIR WORK, SUBMIT A PROPOSED REPAIR PLAN, DEVELOPED BY AN OHIO REGISTERED PROFESSIONAL ENGINEER TO THE ENGINEER. OBTAIN THE ENGINEER'S APPROVAL BEFORE PERFORMING REPAIR.

MEASUREMENT & PAYMENT: THE CITY WILL MEASURE THE QUANTITY OF REMOVALS ON A LUMP SUM BASIS. THE CITY WILL PAY FOR THE ACCEPTED QUANTITIES OF REMOVALS AT THE CONTRACT PRICE FOR ITEM 202, PORTIONS OF STRUCTURE REMOVED, AS PER PLAN.

UTILITIES

SUPPORT AND PROTECTION OF ALL UTILITIES AND APPURTENANCES SHALL BE THE RESPONSIBILITY OF THE CONTRACTOR. COSTS FOR THE REPAIR AND RESTORATION OF EXISTING UTILITIES DAMAGED BY THE CONTRACTOR SHALL BE THE RESPONSIBILITY OF THE CONTRACTOR. COSTS ASSOCIATED WITH THE ABOVE WORK RESPONSIBILITIES SHALL BE INCLUDED IN THE PRICE BID FOR VARIOUS ITEMS.

PRIOR TO EXCAVATION, THE CONTRACTOR SHALL GIVE A 48-HOUR NOTICE TO THE OHIO UTILITIES PROTECTION SERVICE(OUPS) BY CALLING 811. A 48-HOUR NOTICE SHALL BE GIVEN TO THE OWNERS OF UNDERGROUND UTILITIES SHOWN ON THE PLANS WHO ARE NOT MEMBERS OF A REGISTERED UNDERGROUND PROTECTION SERVICE.

CUT LINE CONSTRUCTION JOINT PREPARATION
(MUIRFIELD DRIVE BRIDGE)

SAW CUT BOUNDARIES OF PROPOSED CONCRETE REMOVALS 1/2 INCH DEEP. REMOVE CONCRETE TO A ROUGH SURFACE. LEAVE THE EXISTING REINFORCING STEEL, IF REQUIRED IN THE PLANS, IN PLACE. INSTALL DOWEL BARS IF SPECIFIED. PRIOR TO CONCRETE PLACEMENT, ABRASIVELY CLEAN JOINT SURFACES AND EXISTING EXPOSED REINFORCEMENT TO REMOVE LOOSE AND DISINTEGRATED CONCRETE AND LOOSE RUST. THOROUGHLY CLEAN THE JOINT SURFACE AND EXPOSED REINFORCEMENT OF ALL DIRT, DUST, RUST OR OTHER FOREIGN MATERIAL BY THE USE OF WATER, AIR UNDER PRESSURE, OR OTHER METHODS THAT PRODUCE SATISFACTORY RESULTS. EXISTING REINFORCING STEEL DOES NOT HAVE TO HAVE A BRIGHT STEEL FINISH, BUT REMOVAL ALL PACK AND LOOSE RUST. THOROUGHLY DRENCH EXISTING CONCRETE SURFACES WITH CLEAN WATER AND ALLOW TO DRY TO A DAMP CONDITION BEFORE PLACING CONCRETE.

ITEM 503 – COFFERDAM AND EXCAVATION BRACING, AS PER PLAN

TEMPORARY SHORING SHALL BE REMOVED AFTER COMPLETION OF WORK.

ITEM 509 – REINFORCING STEEL, REPLACEMENT OF EXISTING REINFORCING STEEL, AS PER PLAN
(MUIRFIELD DRIVE BRIDGE)

ANY EXISTING REINFORCING BARS DEEMED BY THE ENGINEER TO BE UNUSABLE BECAUSE OF CORROSION SHALL BE REPLACED WITH NEW EPOXY COATED REINFORCING STEEL. ANY EXISTING REINFORCING BARS WHICH ARE TO BE INCORPORATED INTO THE NEW WORK AND ARE MADE UNUSABLE BY CONCRETE REMOVAL OPERATIONS SHALL BE REPLACED WITH NEW EPOXY COATED REINFORCING STEEL OF THE SAME SIZE AT THE CONTRACTOR'S COST. ALL WORK SHALL BE TO THE SATISFACTION OF THE ENGINEER.

A CONTINGENCY QUANTITY OF 200 POUNDS OF REINFORCING STEEL IS INCLUDED UNDER ITEM 509 – REINFORCING STEEL. REPLACEMENT OF EXISTING REINFORCING STEEL, AS PER PLAN, TO BE USED AS DIRECTED BY THE ENGINEER.

THE NUMBER OF POUNDS OF REINFORCING STEEL PAID FOR AT THE CONTRACT UNIT PRICE SHALL BE THE ACTUAL POUNDS OF REPLACEMENT REINFORCING STEEL SPECIFIED BY THE ENGINEER DUE TO CORROSION, AND SHALL INCLUDE PLACEMENT, DOWELING, BENDING, SUPPORTING, TIE WIRES AND TYING OF THAT SPECIFIED REINFORCING STEEL.

ITEM 511 – CLASS C CONCRETE FOOTING, AS PER PLAN
ITEM 511 – CLASS C CONCRETE, WINGWALL ABOVE FOOTING, AS PER PLAN
ITEM 511 – CLASS C CONCRETE, ABUTMENT ABOVE FOOTING, AS PER PLAN

USE EPOXY COATED REINFORCING STEEL, 60 KSI MINIMUM YIELD STRENGTH, CONFORMING TO SPECIFICATION SECTION 509. SUBMIT SHOP DRAWINGS FOR THE FABRICATION, BENDING, AND PLACEMENT OF REINFORCING STEEL BARS, INCLUDING BAR SCHEDULES, AT LEAST 7 DAYS PRIOR TO FABRICATION, FOR THE ENGINEER'S APPROVAL.

ALL STEEL REINFORCEMENT IN CONCRETE SHALL BE CONSIDERED INCIDENTAL TO THE CONCRETE. PAYMENT SHALL BE INCLUDED IN THE UNIT PRICE FOR THE CONCRETE.

CONCRETE FINISHING

CHAMFER EXPOSED CONCRETE EDGES ¾" BY ¾" UNLESS DIRECTED OTHERWISE BY THE ENGINEER.

ITEM 512 – SEALING OF CONCRETE SURFACES, AS PER PLAN
(EPOXY-URETHANE)

SEALING OF CONCRETE SURFACES, AS DELINEATED, FOR THE SHARED-USE PATH BRIDGE OVER NORTH FORK INDIAN RUN ALONG MUIRFIELD DRIVE SHALL BE MATCHED TO THE EXISTING ADJACENT MUIRFIELD DRIVE BRIDGE.

ITEM 518 – 6" NON-PERFORATED CORRUGATED PIPE, INCLUDING SPECIALS, 720.08, AS PER PLAN

IN ADDITIONS TO THE PIPE AND ALL SPECIALS, THE COST OF THE PRECAST REINFORCED CONCRETE OUTLET SHALL BE INCLUDED IN THE UNIT COST FOR ITEM 518 – 6" NON-PERFORATED CORRUGATED PIPE, INCLUDING SPECIALS,720.08, AS PER PLAN. THE PRECAST REINFORCED CONCRETE OUTLET SHALL BE IN ACCORDANCE WITH ODOT STANDARD DRAWING DM-1.1 (REVISED 1-18-13).

ABBREVIATIONS:

℄	BASELINE	MAX.	MAXIMUM
℄	CENTERLINE	MIN.	MINIMUM
APPROX.	APPROXIMATELY	N.F.I.R	NORTH FORK INDIAN RUN
B.F.	BACK FACE	OFF.	OFFSET
BOTT.	BOTTOM	P.E.J.F.	PREFORMED EXPANSION JOINT FILLER
C.P.P.	CORRUGATED PLASTIC PIPE	P.F.	PROFILE GRADE
C.I.P.	CAST IN PLACE	PROP.	PROPOSED
C.J.	CONSTRUCTION JOINT	R.A.	REAR ABUTMENT
CLR.	CLEAR	R.F.	REAR FACE
DIA.	DIAMETER	RT.	RIGHT
E.F.	EACH FACE	SPA.	SPACE
EL.	ELEVATION	S.O.	SERIES OF
E.P.	EDGE OF PAVEMENT	STA.	STATION
EQ.	EQUAL	STR.	STRAIGHT
EX.	EXISTING	TEMP.	TEMPORARY
EXIST.	EXISTING	T.O.W.	TOP OF WALL
F.A.	FORWARD ABUTMENT	TYP.	TYPICAL
F.F.	FRONT FACE	U.N.O.	UNLESS NOTED OTHERWISE
FL	FLOW LINE	W/	WITH
INV.	INVERT		
LT.	LEFT		

ENGINEERS SEAL FOR BRIDGES:

STATE OF OHIO
JAMAL N. SHANAA
E-69577
REGISTERED PROFESSIONAL ENGINEER

SIGNED: Jamal Shanaa
DATE: 8/14/2013

DESIGN AGENCY
ARMSTRONG.
471 E. BROAD ST., SUITE 2010
COLUMBUS, OH 43215

DESIGNED	DRAWN	REVIEWED	DATE
ALM	ALM	FRR	06/2013
CHECKED	REVISED	STRUCTURE FILE NUMBER	
JNS		N/A	

STRUCTURE GENERAL NOTES (1 OF 2)
SHARED-USE PATH

BRAND ROAD
SHARED-USE PATH

1 / 10

39
49

File Name: O:\Projects\FRA\Dublin\Brand Road Multi-Use Path\structures\FRA000_0010C\sheets\000_0010C_EG001.dwg - STRUCTURAL NOTES
Modified / By: August 14, 2013 2:44:27 PM / AMoorman
Plotted / By: August 14, 2013 2:45:05 PM / Adam Moorman

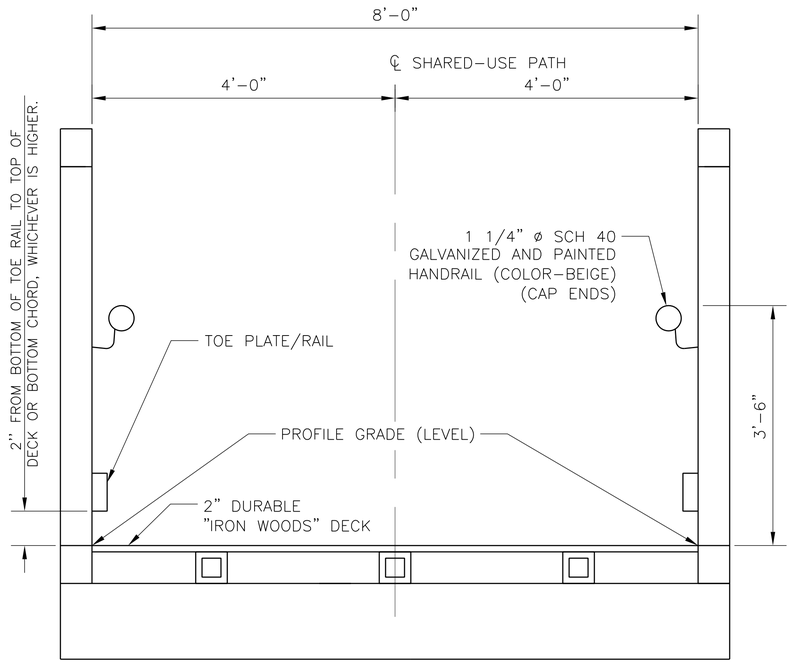

TRANSVERSE SECTION

NOTE:

THE BRIDGE SHALL HAVE HORIZONTAL RAILS SPACED AT 8 INCHES AND LOCATED ON THE OUTSIDE OF THE TRUSS SYSTEM. THE BRIDGE SHALL NOT HAVE PICKETS.

BRIDGE A SUB-SUMMARY

ITEM	TOTAL	UNIT	DESCRIPTION	REF. SHEET
202	1	LUMP	PORTIONS OF STRUCTURES REMOVED, AS PER PLAN	1/10
503	1	LUMP	COFFERDAMS AND EXCAVATION BRACING, AS PER PLAN	1/10
503	1	LUMP	UNCLASSIFIED EXCAVATION	
511	70	CU YD	CLASS C CONCRETE, FOOTING, AS PER PLAN	1/10
511	31	CU YD	CLASS C CONCRETE, WINGWALL ABOVE FOOTING, AS PER PLAN	1/10
511	25	CU YD	CLASS C CONCRETE, ABUTMENT ABOVE FOOTING, AS PER PLAN	1/10
512	5	SQ YD	TYPE 2 WATERPROOFING MEMBRANE	
512	71	SQ YD	SEALING CONCRETE SURFACES (EPOXY-URETHANE), AS PER PLAN	1/10
516	34	SQ FT	1" PREFORMED EXPANSION JOINT FILLER	
518	48	CU YD	POROUS BACKFILL WITH FILTER FABRIC	
518	79	FT	6" PERFORATED CORRUGATED PIPE, INCLUDING SPECIALS, 720.12	
518	45	FT	6" NON-PERFORATED CORRUGATED PIPE, INCLUDING SPECIALS, 720.08, AS PER PLAN	1/10
519	17	CU FT	SPECIAL-PATCHING CONCRETE STRUCTURE, MISC.; MUIRFIELD DRIVE WINGWALL	4/10
SPECIAL	56	FT	RAILING (42" HIGH METAL RAILING)	
SPECIAL	1	LUMP	ITEM SPECIAL-STRUCTURE MISC.: 67' PRE-ENGINEERED HALF THROUGH TRUSS	2/10
			PEDESTRIAN BRIDGE	

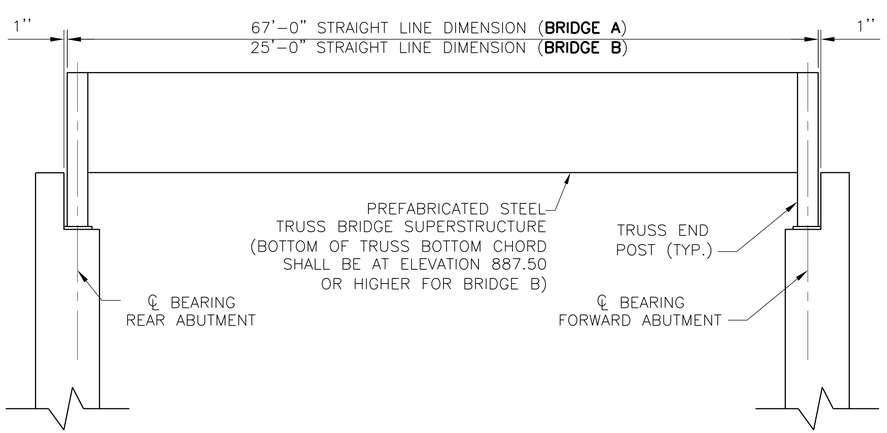

ELEVATION

NOT TO SCALE

BRIDGE B SUB-SUMMARY

ITEM	TOTAL	UNIT	DESCRIPTION	REF. SHEET
503	1	LUMP	COFFERDAMS AND EXCAVATION BRACING, AS PER PLAN	1/10
503	1	LUMP	UNCLASSIFIED EXCAVATION	
511	22	CU YD	CLASS C CONCRETE, FOOTING, AS PER PLAN	1/10
511	13	CU YD	CLASS C CONCRETE, ABUTMENT ABOVE FOOTING, AS PER PLAN	1/10
512	26	SQ YD	SEALING CONCRETE SURFACES (EPOXY-URETHANE), AS PER PLAN	1/10
518	8	CU YD	POROUS BACKFILL WITH FILTER FABRIC	
518	24	FT	6" PERFORATED CORRUGATED PIPE, INCLUDING SPECIALS, 720.12	
518	30	FT	6" NON-PERFORATED CORRUGATED PIPE, INCLUDING SPECIALS, 720.08, AS PER PLAN	1/10
SPECIAL	1	LUMP	ITEM SPECIAL-STRUCTURE MISC.: 25' PRE-ENGINEERED HALF THROUGH TRUSS	2/10
			PEDESTRIAN BRIDGE	

BRIDGE A: SHARED-USE PATH BRIDGE OVER NORTH FORK INDIAN RUN ALONG MUIRFIELD DRIVE

BRIDGE B: SHARED-USE PATH BRIDGE OVER BEAR RUN ALONG BRAND ROAD

DESIGN AGENCY
THE ARMSTRONG
471 E. BROAD ST., SUITE 2010
COLUMBUS, OH 43215

DESIGNED	DRAWN	REVIEWED	DATE
ALM	ALM	FRR	06/2013
CHECKED	REVISED	STRUCTURE FILE NUMBER	
JNS		N/A	

STRUCTURE GENERAL NOTES (2 OF 2)

SHARED-USE PATH

BRAND ROAD
SHARED-USE PATH

File Name: O:\Projects\FRA\Dublin\Brand Road Multi-Use Path\structures\FRA000_0010C\sheets\000_0010C_EG001.dwg - STRUCTURAL NOTES (2)
Modified / By: August 14, 2013 1:26:41 PM / AMoorman
Plotted / By: August 14, 2013 1:26:56 PM / Adam Moorman

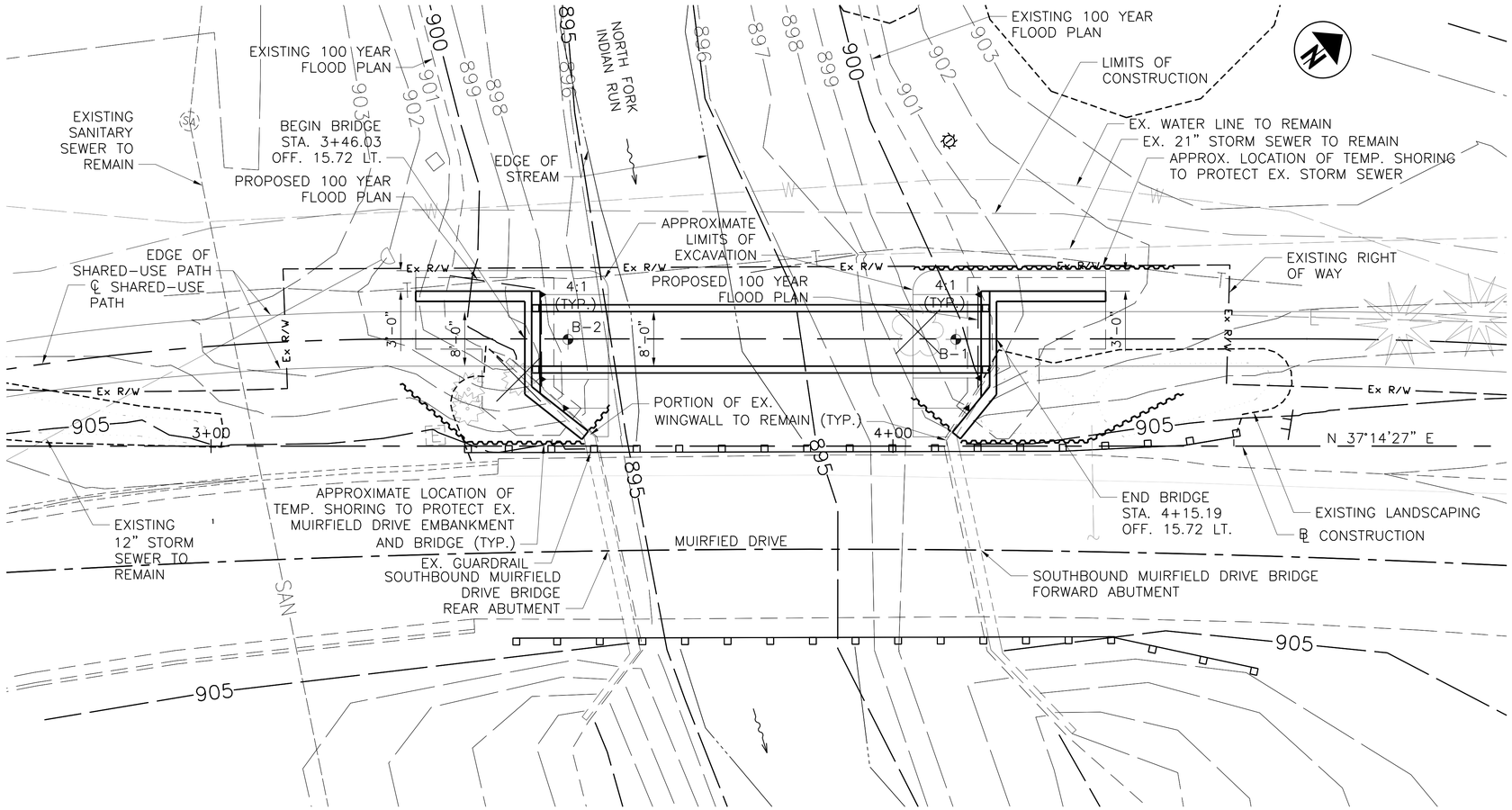

PLAN

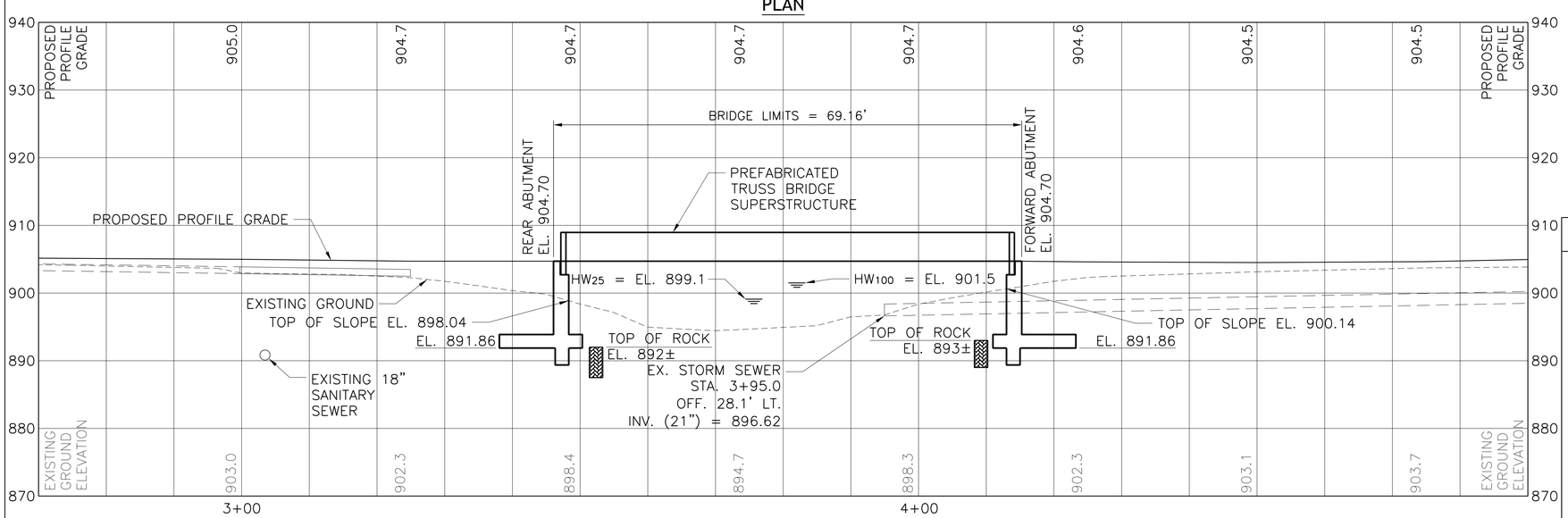

PROFILE ALONG ℄ SHARED USED PATH

BENCHMARK DATA			
BM #1 STA.4+65.10	ELEV. 905.78	OFFSET 31.59	RT.

FOR ADDITIONAL BENCHMARK INFORMATION. SEE ROADWAY PLAN SHEET 17/49

NOTES

EARTHWORK LIMITS SHOWN ARE APPROXIMATE. ACTUAL SLOPES SHALL CONFORM TO PLAN CROSS SECTIONS.

0 10 20

SCALE: 1" = 10'

LEGEND

BORING LOCATION

HYDRAULIC DATA (Q'S PROVIDED BY CDM MODEL FROM THE CITY OF DUBLIN)

DRAINAGE AREA = 8.4 SQ. MILES
Q (25) = 426 CFS V (25) = 3.15 FT/S
Q (100) = 1070 CFS V (100) = 4.12 FT/S
STRUCTURE CLEARS THE 100 YEAR DESIGN HW BY 1.7 FEET.

PROPOSED STRUCTURE

TYPE: SINGLE SPAN PREFABRICATED STEEL TRUSS SUPERSTRUCTURE SUPPORTED ON REINFORCED CONCRETE ABUTMENTS

SPANS: 67'-0" OUT-TO-OUT BRIDGE TRUSS
ROADWAY: 8'-0" FACE/FACE TRUSS
LOADING: 85 PSF (PEDESTRIAN LOAD) AND 8 KIP VEHICLE
SKEW: 0° 00' 00"
APPROACH SLABS: NONE
ALIGNMENT: TANGENT
CROWN: LEVEL
COORDINATES: LATITUDE 40° 07' 42" N
LONGITUDE 83° 08' 57" W

DESIGN AGENCY
THE ARMSTRONG
471 E BROAD ST., SUITE 2010
COLUMBUS, OH 43215

DATE	REVIEWED	DRAWN	DESIGNED	CHECKED
06/2013	FRR	ALM	ALM	JNS
STRUCTURE FILE NUMBER	REVISED			
N/A				

FRANKLIN COUNTY
STA. 3+46.03
STA. 4+15.19

SITE PLAN
SHARED-USE PATH BRIDGE OVER NORTH FORK INDIAN RUN ALONG MUIRFIELD DRIVE

BRAND ROAD MULTI-USE PATH

File Name: O:\Projects\FRA\Dublin\Brand Road Multi-Use Path\structures\FRA000_0010C\sheets\000_0010C_SP001.dwg - Sheet
Modified / By: August 13, 2013 3:06:49 PM / AMoorman
Plotted / By: August 14, 2013 1:17:24 PM / Adam Moorman

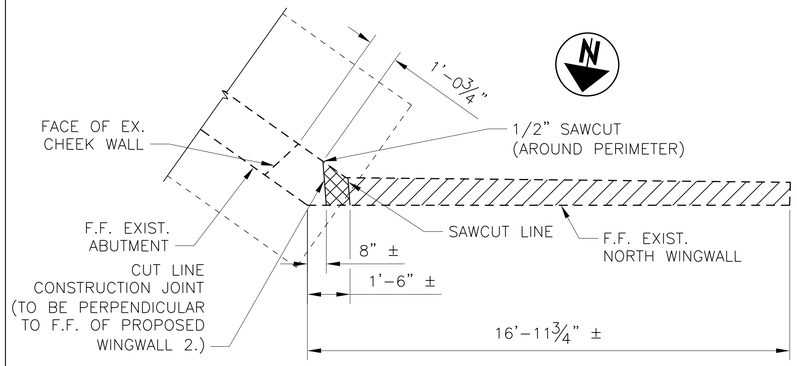

PLAN
REAR ABUTMENT

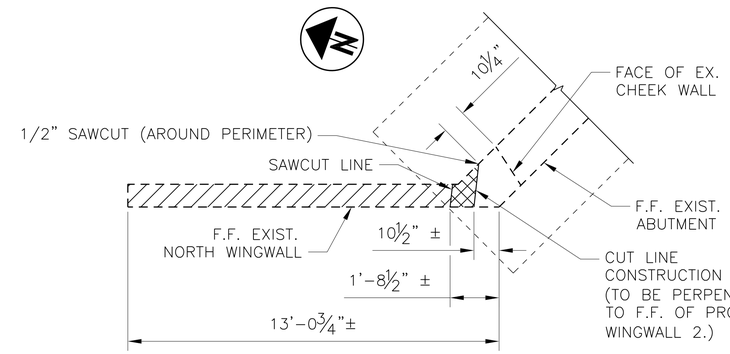

PLAN
FORWARD ABUTMENT

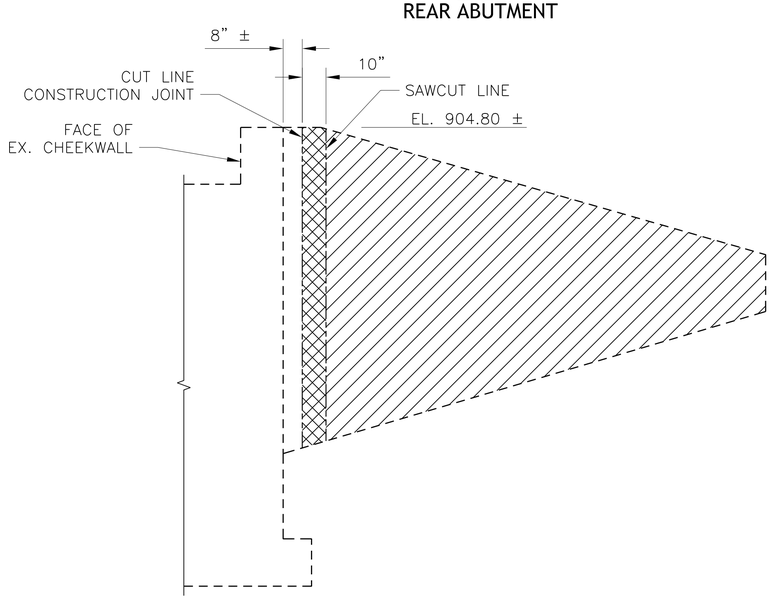

ELEVATION
REAR ABUTMENT

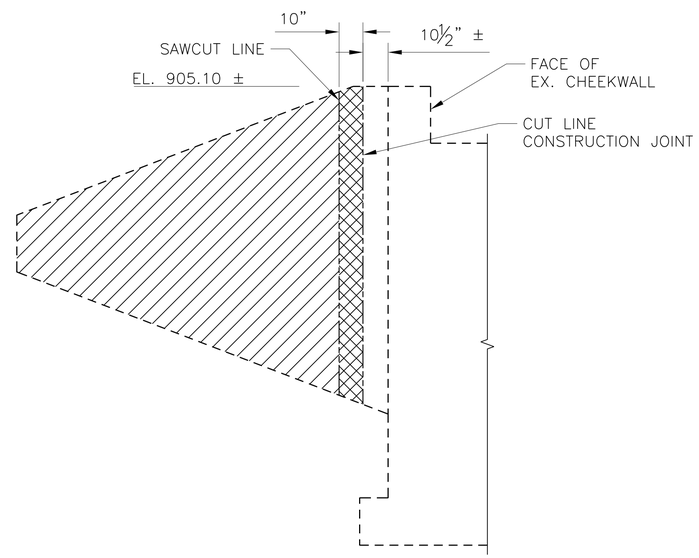

ELEVATION
FORWARD ABUTMENT

NOTES:

1. SEE SHEETS 1/10 & 2/10 FOR GENERAL NOTES AND ESTIMATED QUANTITIES.
2. EXISTING DIMENSIONS AND ELEVATIONS ARE OBTAINED FROM EXISTING DRAWINGS AND SURVEY. CONTRACTOR SHALL VERIFY DIMENSIONS AND ELEVATIONS IN THE FIELD.
3. EXISTING HORIZONTAL REINFORCEMENT IN WINGWALL SHALL BE CUT AT THE SAWCUT LINES. EXISTING HORIZONTAL REINFORCEMENT SHALL REMAIN WITHIN THE LIMITS OF REMOVAL WITH HAND TOOLS AND SHALL BE BENT TO FIT INSIDE THE 6" CONCRETE REPAIR AS SHOWN ON THIS SHEET TO MAINTAIN A 2" COVER.

   IF EXISTING REINFORCEMENT DOES NOT PROTRUDE FROM CONSTRUCTION JOINT INTO THE PROPOSED CONCRETE REPAIR, CONTRACTOR SHALL PROVIDE HORIZONTAL BARS AT EACH FACE AT 1'-0" MAX SPACING. REINFORCEMENT SHALL BE EMBEDDED 8" INTO HORIZONTAL DOWEL HOLES IN THE REMAINING EXISTING CONCRETE AND SHALL HAVE A 90° STANDARD HOOK IN THE REPAIR CONCRETE. DOWEL HOLES AND REINFORCEMENT TO BE APPROVED BY THE ENGINEER.
4. REPAIR CONCRETE MIX SHALL BE SIKACRETE 211 SCC PLUS OR EQUAL. APPLY A BONDING AGENT TO THE SURFACE OF THE EXISTING CONCRETE TO COME IN CONTACT WITH NEW CONCRETE. BONDING AGENT SHALL BE SIKA ARMATEC 110 EPOCEM OR EQUAL. CONCRETE MIX & BONDING AGENT SHALL BE COMPATIBLE AND PRODUCED BY THE SAME MANUFACTURER. APPLY BONDING AGENT AND PERFORM CONCRETE REPAIR IN ACCORDANCE WITH THE MANUFACTURER'S RECOMMENDATION.

   PRE-APPROVED MANUFACTURER:
   SIKA CORPORATION
   201 POLITO AVENUE
   LYNDHURST, NJ 07071
   PHONE: 800-933-7452

   ALL MATERIAL AND WORK ASSOCIATED WITH THE CONCRETE REPAIR SHALL BE INCIDENTAL TO ITEM 519-SPECIAL-PATCHING CONCRETE STRUCTURE, MISC.: MUIRFIELD DRIVE WINGWALL.
5. EXPANSION JOINT MATERIAL SHALL CONFORM TO ASTM D1752, TYPE 1 (RECYCLED RUBBER EXPANSION MATERIAL). FIBROUS TYPE EXPANSION MATERIAL SHALL NOT BE USED.

EXISTING MUIRFIELD DRIVE BRIDGE REMOVAL DETAILS

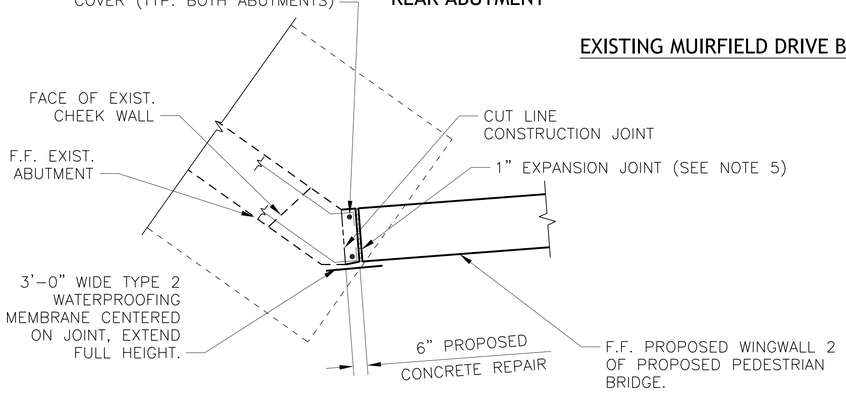

PROPOSED ABUTMENT REHAB PLAN
REAR ABUTMENT

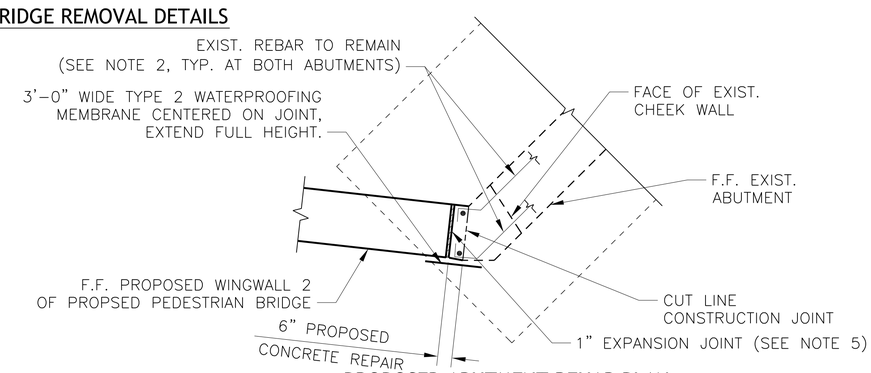

PROPOSED ABUTMENT REHAB PLAN
FORWARD ABUTMENT

LEGEND:

REMOVAL

REMOVAL WITH HAND TOOLS

DESIGN AGENCY
THE ARMSTRONG
471 E. BROAD ST., SUITE 2010
COLUMBUS, OH 43215

DESIGNED	DRAWN	REVIEWED	DATE
ALM	ALM	FRR	06/2013
CHECKED	REVISED	STRUCTURE FILE NUMBER	
JNS		N/A	

REMOVAL AND REPAIR DETAILS
SHARED-USE PATH BRIDGE OVER NORTH FORK INDIAN RUN
ALONG MUIRFIELD DRIVE

BRAND ROAD
SHARED-USE PATH

File Name: O:\Projects\FRA\Dublin\Brand Road Multi-Use Path\structures\FRA000_0010\Csheets\000_0010C_RE001.dwg - Removal Details
Modified / By: May 28, 2013 2:40:10 PM / AMoorman
Plotted / By: June 4, 2013 5:01:16 PM / Adam Moorman

NOTES:

1. SEE SHEETS 1/10 & 2/10 FOR GENERAL NOTES AND ESTIMATED QUANTITIES.
2. SEE SHEET 7/10 FOR SECTION B–B, E–E AND F–F.
3. SEE SHEET 7/10 FOR WINGWALL 2 DETAILS.

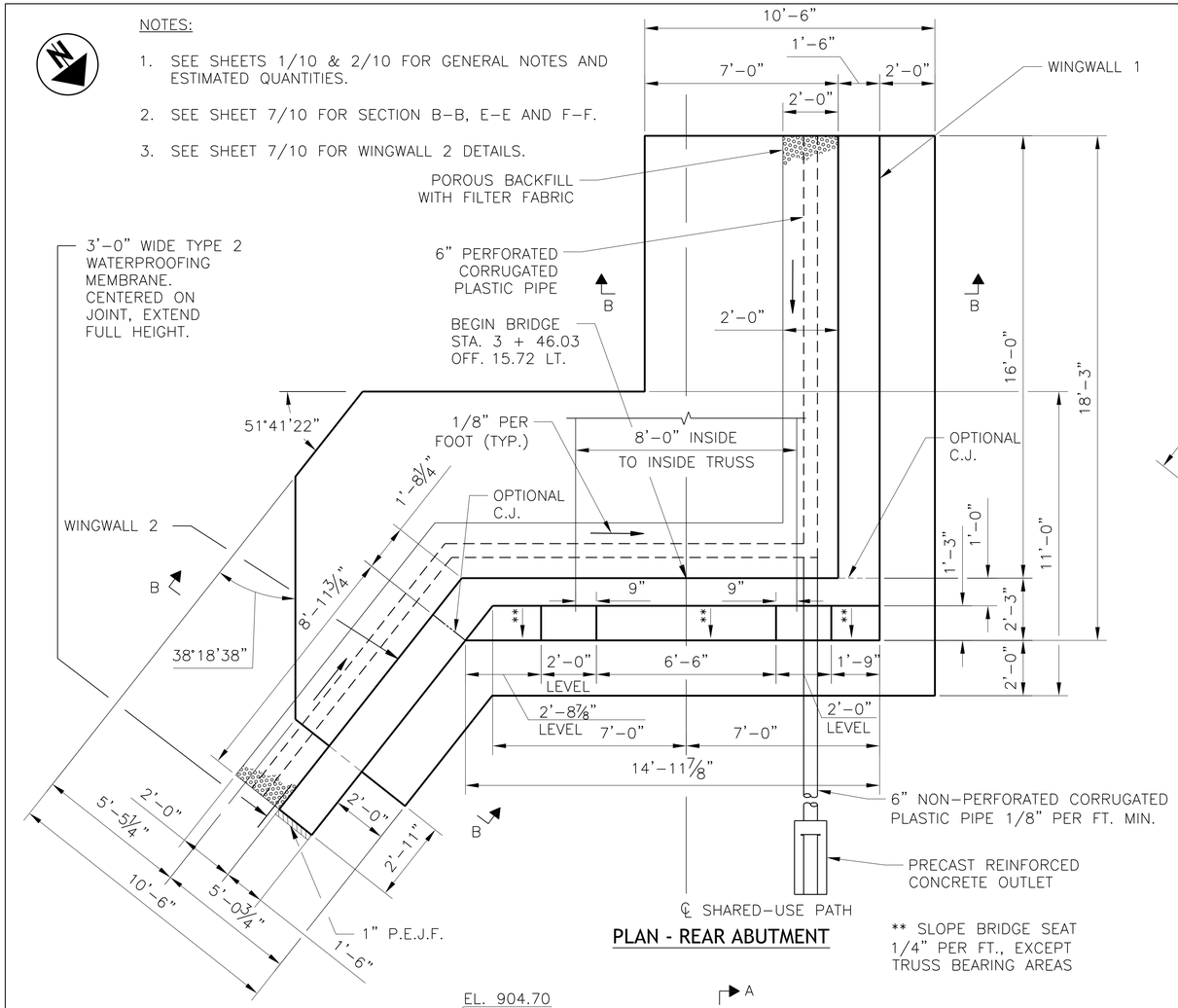

PLAN - REAR ABUTMENT

** SLOPE BRIDGE SEAT 1/4" PER FT., EXCEPT TRUSS BEARING AREAS

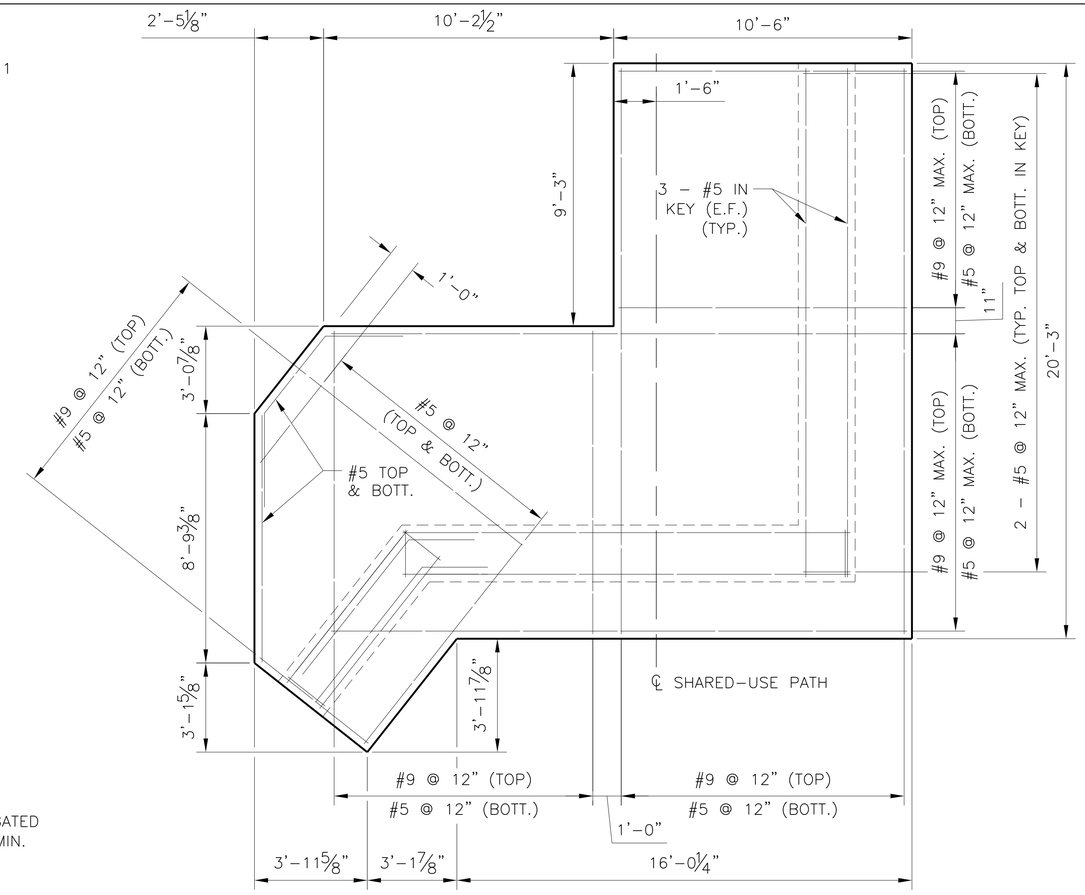

FOUNDATION PLAN

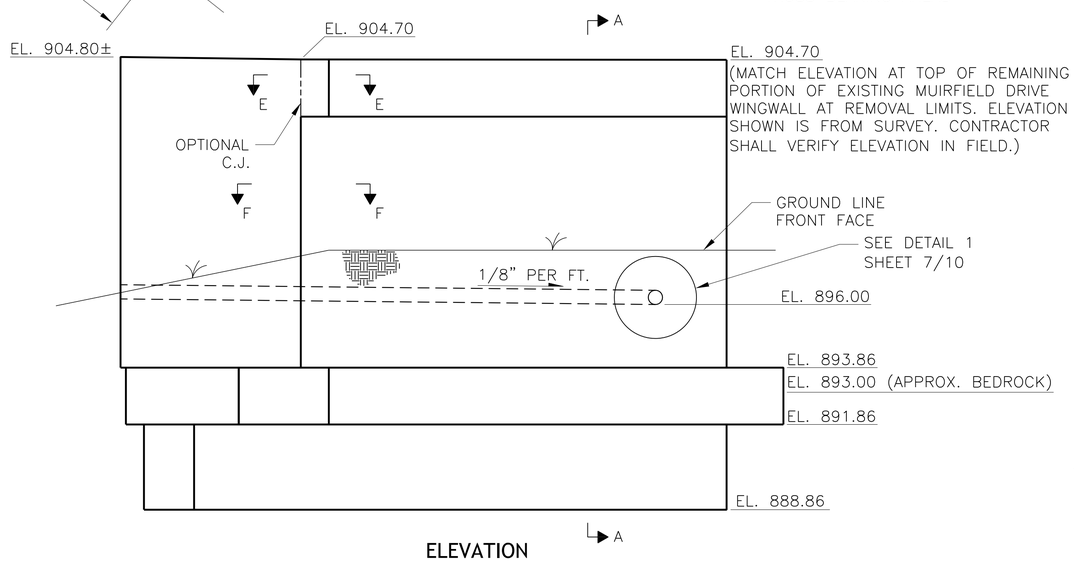

ELEVATION

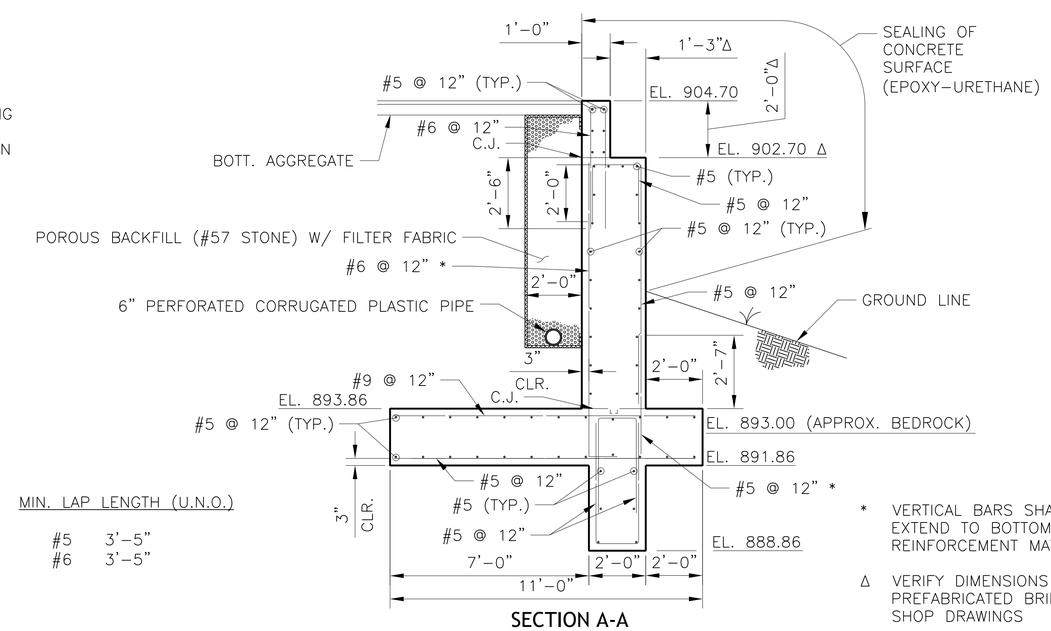

SECTION A-A

MIN. LAP LENGTH (U.N.O.)

#5	3'–5"
#6	3'–5"

* VERTICAL BARS SHALL EXTEND TO BOTTOM REINFORCEMENT MAT.

Δ VERIFY DIMENSIONS WITH PREFABRICATED BRIDGE SHOP DRAWINGS

DESIGN AGENCY
THE ARMSTRONG
471 E. BROAD ST., SUITE 2010
COLUMBUS, OH 43215

DESIGNED	DRAWN	REVIEWED	DATE
ALM	ALM	FRR	06/2013
CHECKED	REVISED	STRUCTURE FILE NUMBER	
JNS		N/A	

REAR ABUTMENT DETAILS

SHARED–USE PATH BRIDGE OVER NORTH FORK INDIAN RUN ALONG MUIRFIELD DRIVE

BRAND ROAD SHARED-USE PATH

File Name: O:\Projects\FRA\Dublin\Brand Road Multi-Use Path\structures\FRA000_0010\Cisheets\000_0010C_AR001.dwg - Rear Abutment Details
Modified / By: June 4, 2013 5:03:13 PM / AMoorman
Plotted / By: August 13, 2013 3:11:32 PM / Adam Moorman

NOTES:

1. SEE SHEET 1/10 & 2/10 FOR GENERAL NOTES AND ESTIMATED QUANTITIES.
2. SEE SHEET 7/10 FOR SECTION B–B, C–C AND D–D.
3. SEE SHEET 7/10 FOR WINGWALL 2 DETAILS.

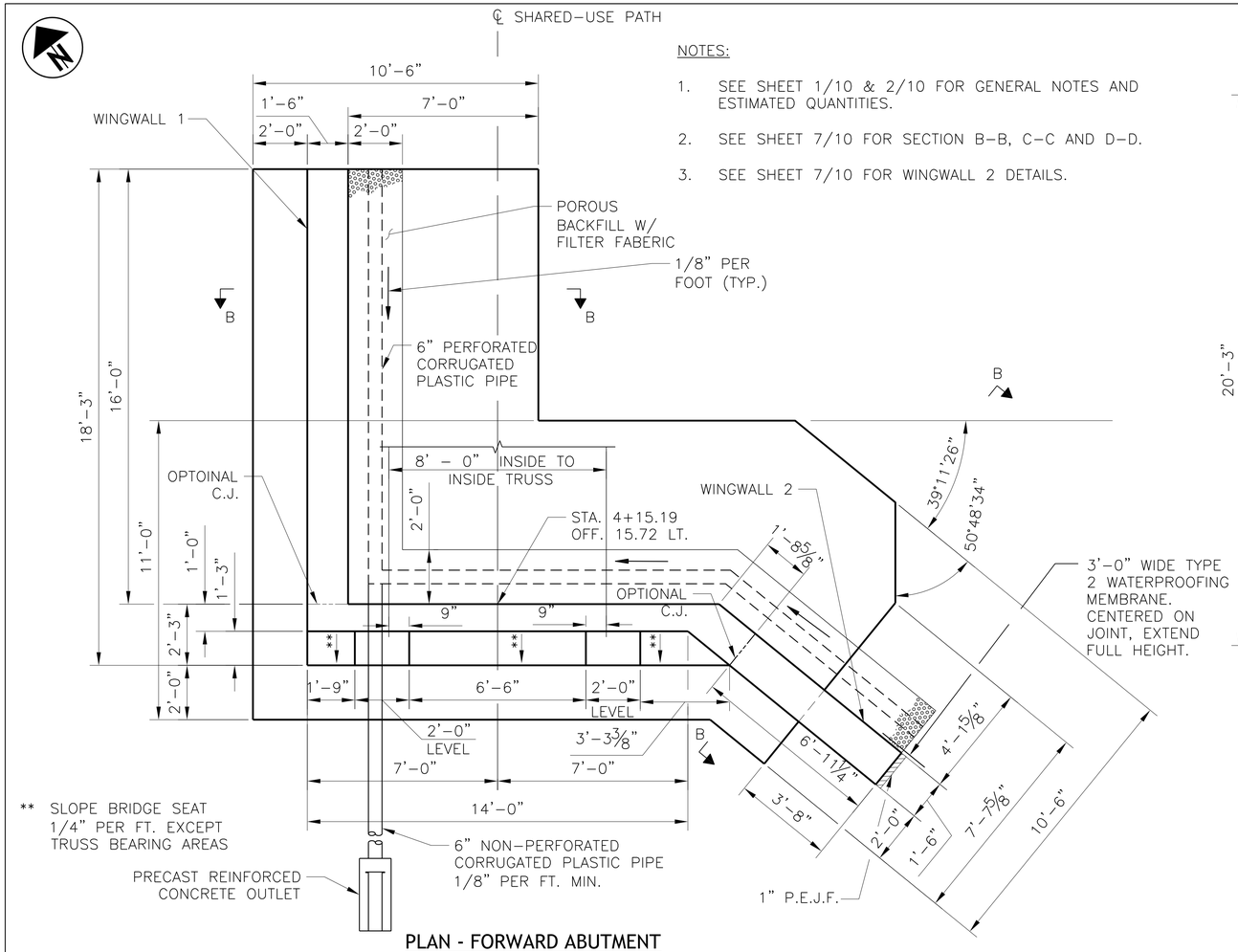

** SLOPE BRIDGE SEAT 1/4" PER FT. EXCEPT TRUSS BEARING AREAS

PLAN - FORWARD ABUTMENT

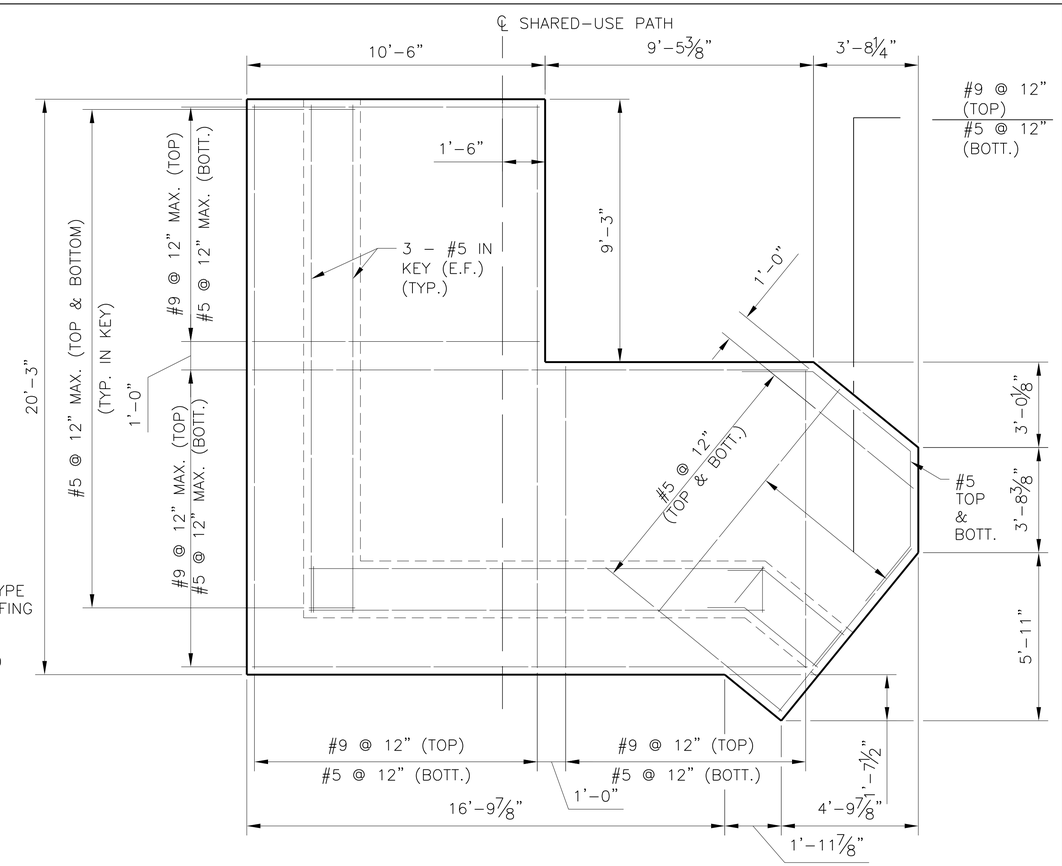

FOUNDATION PLAN

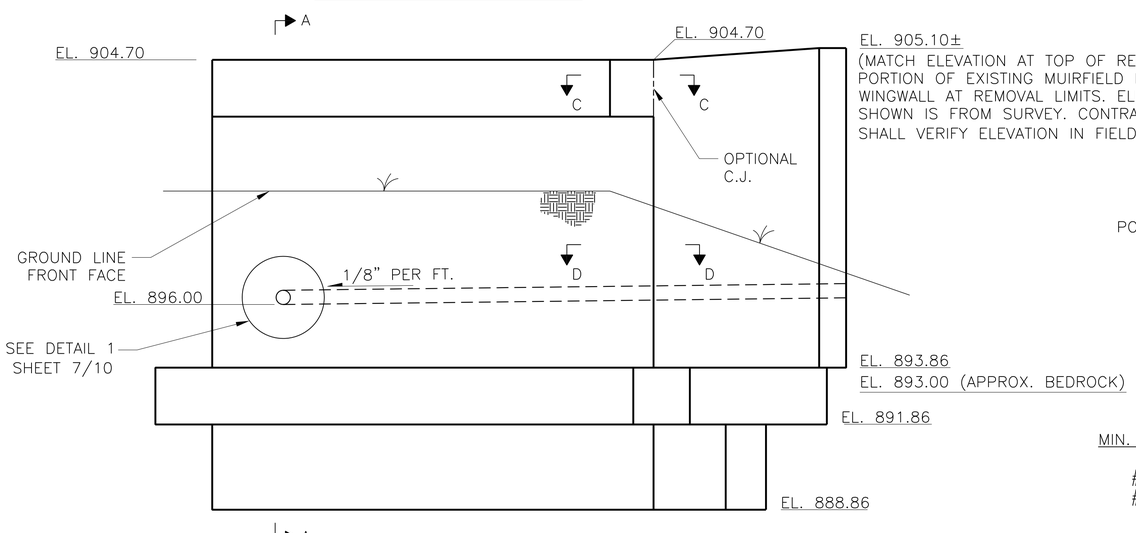

ELEVATION

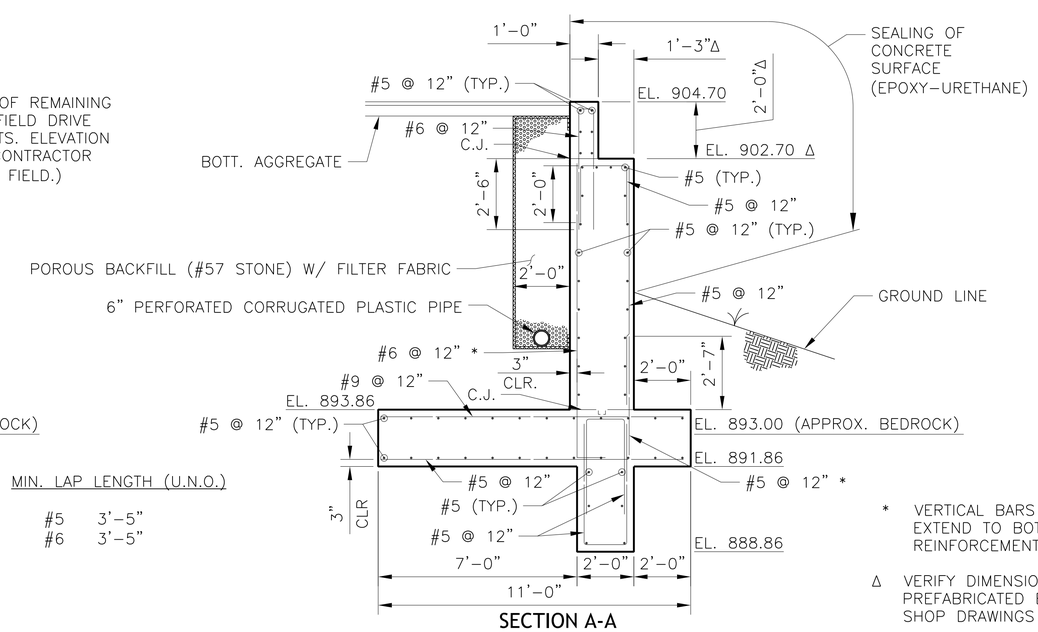

SECTION A-A

MIN. LAP LENGTH (U.N.O.)

#5	3'–5"
#6	3'–5"

* VERTICAL BARS SHALL EXTEND TO BOTTOM REINFORCEMENT MAT.

Δ VERIFY DIMENSIONS WITH PREFABRICATED BRIDGE SHOP DRAWINGS

DESIGN AGENCY
THE ARMSTRONG
471 E. BROAD ST., SUITE 2010
COLUMBUS, OH 43215

DESIGNED	DRAWN	REVIEWED	DATE
ALM	ALM	FRR	06/2013
CHECKED	REVISED	STRUCTURE FILE	NUMBER
JNS		N/A	

FORWARD ABUTMENT DETAILS

SHARED–USE PATH BRIDGE OVER NORTH FORK INDIAN RUN ALONG MUIRFIELD DRIVE

BRAND ROAD
SHARED-USE PATH

6 / 10

44 / 49

File Name: O:\Projects\FRA\Dublin\Brand Road Multi-Use Path\structures\FRA000_0010C\sheets\000_0010C_AR001.dwg - Forward Abutment Details
Modified / By: June 4, 2013 5:03:13 PM / AMoorman
Plotted / By: August 13, 2013 3:12:04 PM / Adam Moorman

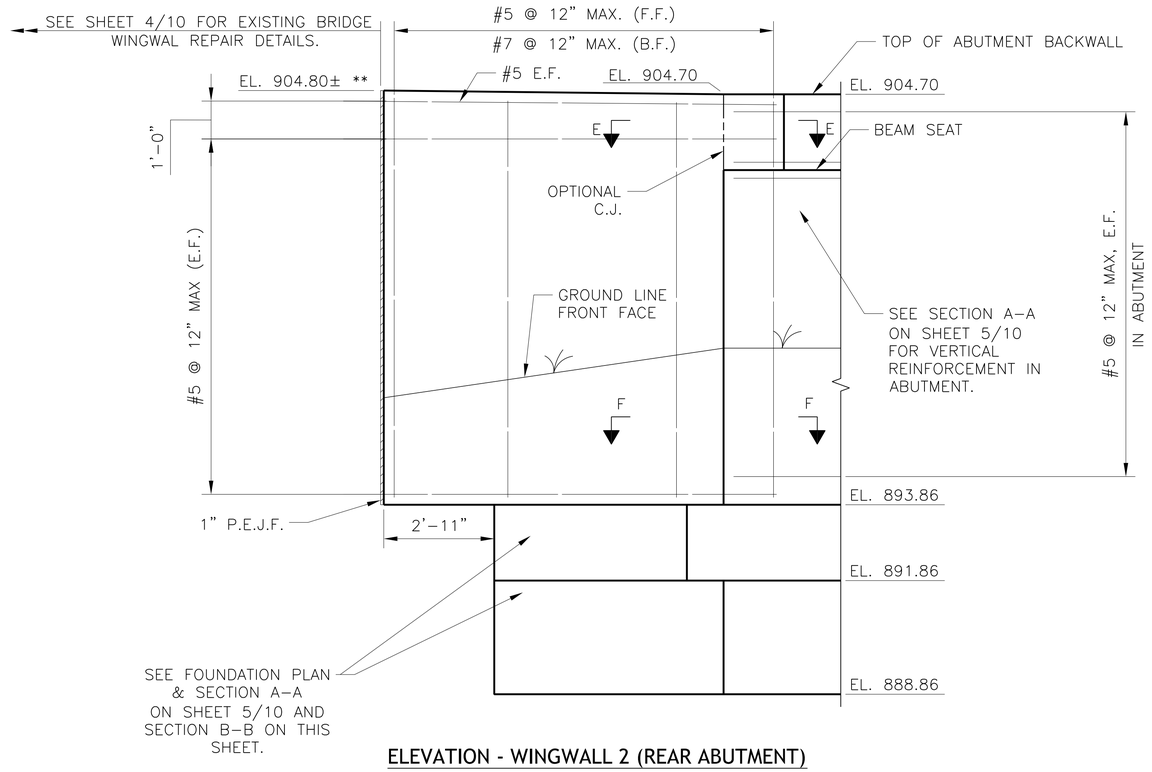

ELEVATION - WINGWALL 2 (REAR ABUTMENT)

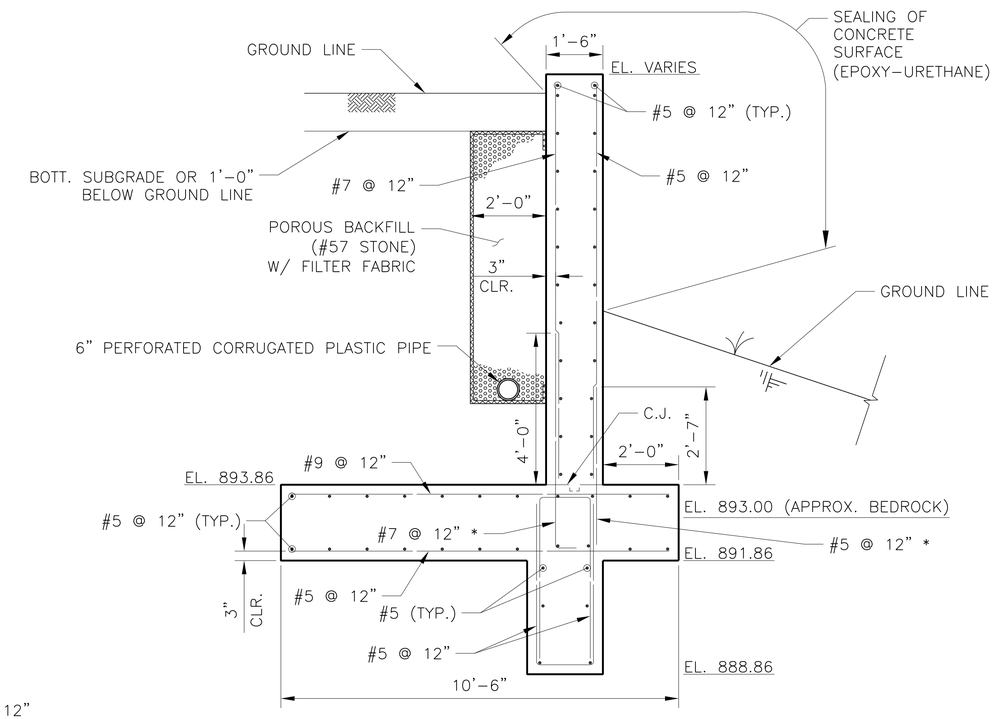

SECTION B-B

* VERTICAL BARS SHALL EXTEND TO BOTTOM REINFORCEMENT MAT.

** MATCH ELEVATION AT TOP OF REMAINING PORTION OF EXISTING MUIRFIELD DRIVE WINGWALL AT REMOVAL LIMITS. ELEVATIONS SHOWN ARE FROM SURVEY. CONTRACTOR SHALL VERIFY ELEVATIONS IN FIELD.

MIN. LAP LENGTH (U.N.O.)

#5 3'-5"
#7 3'-8"

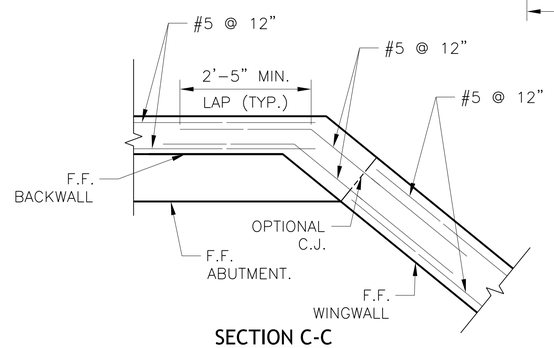

SECTION C-C

(SECTION E-E SIMILAR)
NOTE: VERTICAL REINFORCEMENT NOT SHOWN.

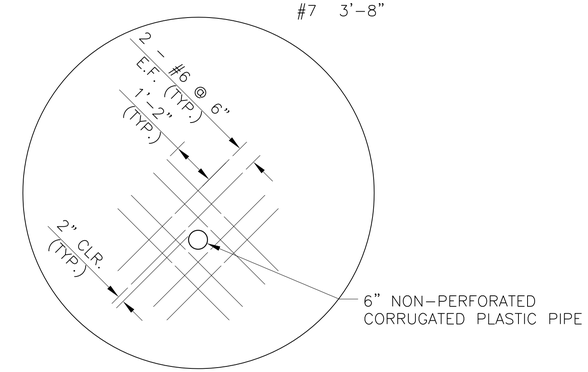

DETAIL 1
ADDITIONAL REINFORCEMENT

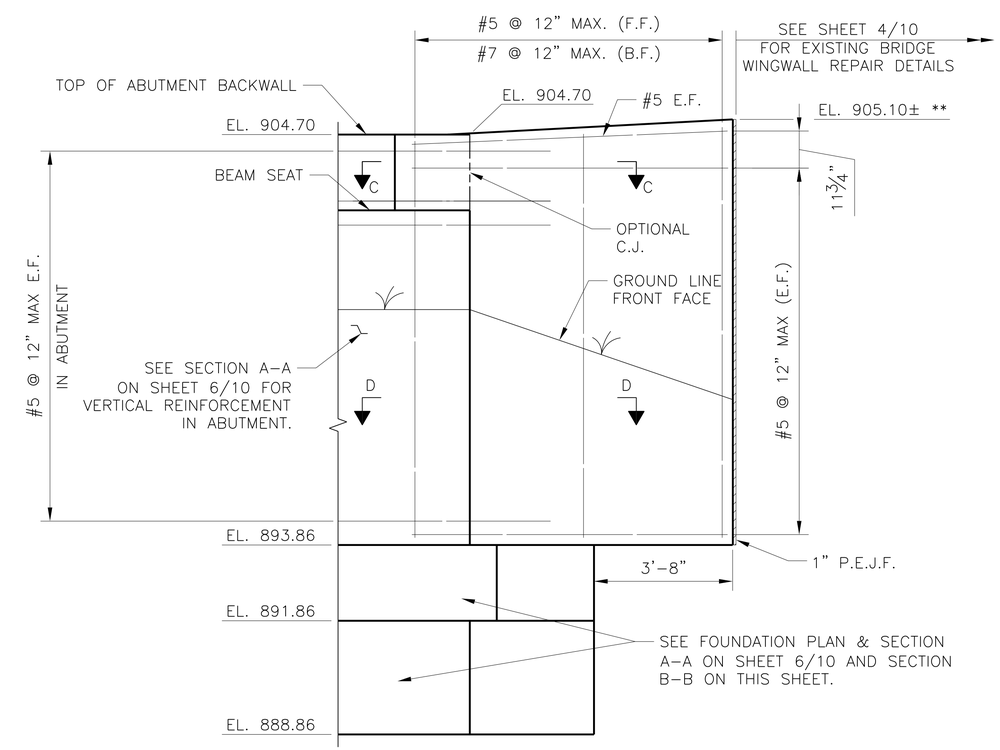

ELEVATION - WINGWALL 2 (FORWARD ABUTMENT)

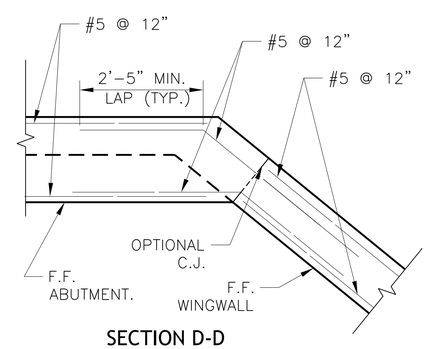

SECTION D-D

(SECTION F-F SIMILAR)
NOTE: VERTICAL REINFORCEMENT NOT SHOWN.

NOTE:

1. SEE SHEETS 1/10 & 2/10 FOR GENERAL NOTES AND ESTIMATED QUANTITIES.

DESIGN AGENCY
THE ARMSTRONG. 471 E. BROAD ST., SUITE 2010 COLUMBUS, OH 43215

DESIGNED	DRAWN	REVIEWED	DATE
ALM	ALM	FRR	06/2013
CHECKED	REVISED	STRUCTURE FILE NUMBER	
JNS		N/A	

WINGWALL DETAILS
SHARED-USE PATH BRIDGE OVER NORTH FORK INDIAN RUN ALONG MUIRFIELD DRIVE

BRAND ROAD SHARED-USE PATH

7 / 10

45 / 49

File Name: O:\Projects\FRA\Dublin\Brand Road Multi-Use Path\structures\FRA000_0010C\sheets\000_0010C_AR001.dwg - Foundation & Wingwall Details
Modified / By: June 4, 2013 5:03:13 PM / AMoorman
Plotted / By: August 13, 2013 3:12:27 PM / Adam Moorman

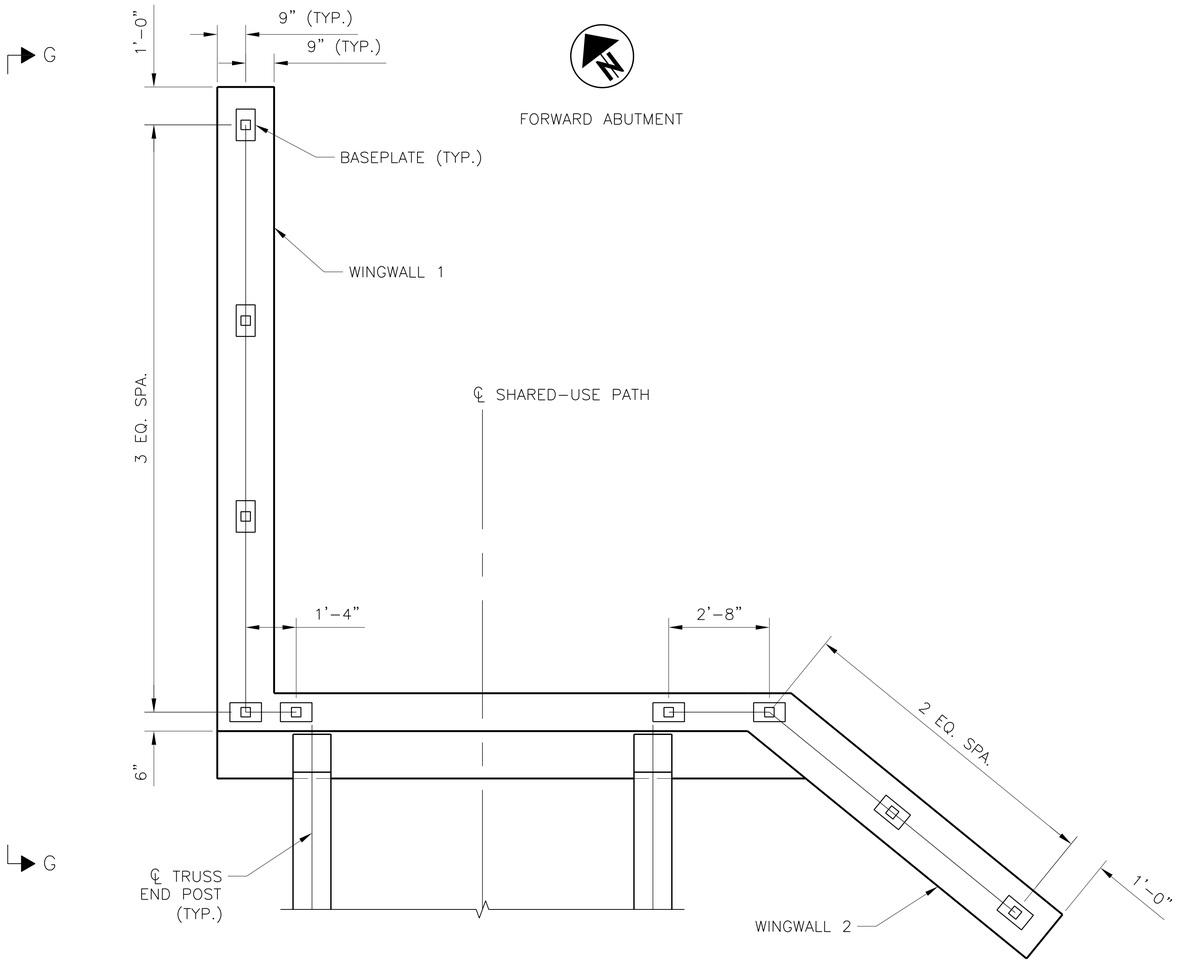

RAILING PLAN

(FORWARD ABUTMENT SHOWN, REAR ABUTMENT SIMILAR)

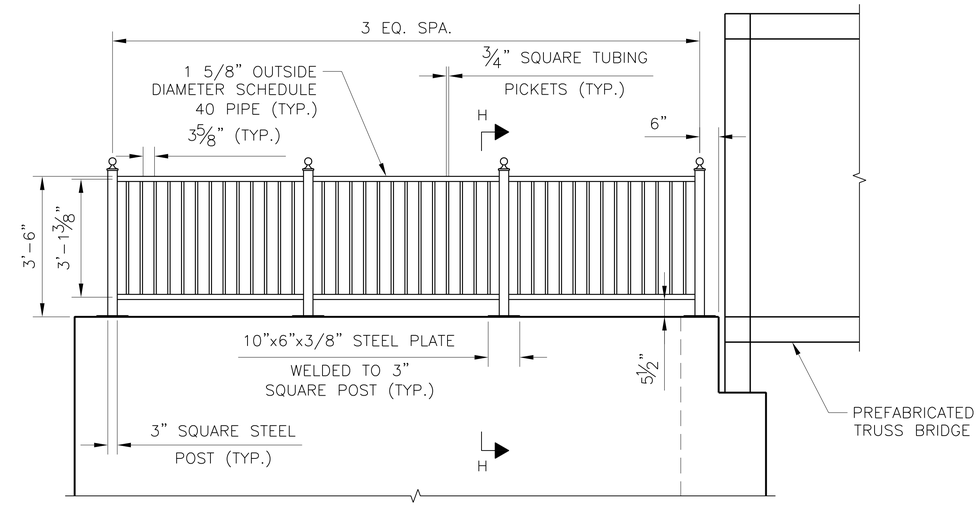

SECTION G-G

(PROPOSED GRADE NOT SHOWN FOR CLARITY)
(WINGWALL 1 SHOWN, WINGWALL 2 SIMILAR)

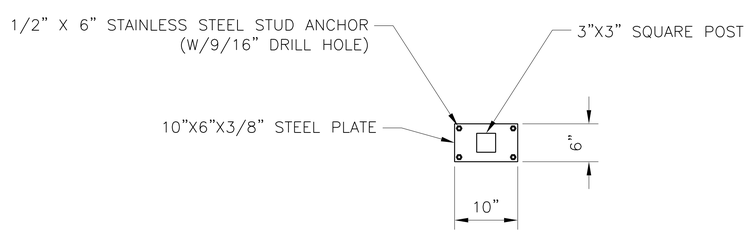

POST SUPPORT BASE PLATE PLAN

(TYP. AT EACH POST)

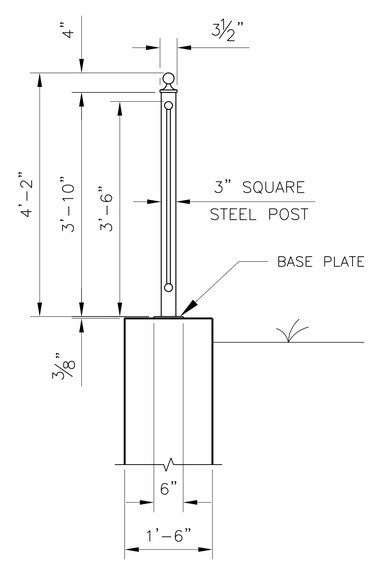

SECTION H-H

RAILING DETAIL

NOTES:

1. ALL RAILING MATERIAL SHALL BE HOT DIPPED GALVANIZED AND POWDER COATED BLACK.
2. PIPE RAIL SHALL BE ASTM A53, TYPE E OR S GRADE B OR ASTM A501 GRADE B. SQUARE TUBES SHALL BE ASTM A500 GRADE B OR ASTM A501.
3. EACH POST SHALL BE WELDED TO A 10"x6"x3/8" STEEL PLATE PRIOR TO GALVANIZING AND PAINTING. THAT PLATE ASSEMBLY SHALL THEN BE ANCHORED TO THE TOP OF THE WINGWALL WITH 4-1/2"x6" STAINLESS STEEL STUDS.
4. WELDING SHALL BE IN ACCORDANCE WITH ANSI/AWS D1.1, STRUCTURAL WELDING CODE.
5. ALL LABOR, MATERIALS, EQUIPMENT AND INCIDENTALS NECESSARY TO FABRICATE, GALVANIZE, PAINT, AND INSTALL THE METAL RAILING SHALL BE INCLUDED IN THE PER FOOT QUANTITY, ITEM SPECIAL, RAILING (42" HIGH METAL RAILING).
6. POST SPACING SHALL NOT EXCEED 7'-0".

DESIGN AGENCY
THE ARMSTRONG
471 E BROAD ST., SUITE 2010
COLUMBUS, OH 43215

DESIGNED	DRAWN	REVIEWED	DATE
ALM	ALM	FRR	06/2013
CHECKED	REVISED	STRUCTURE FILE NUMBER	
JNS		N/A	

RAILING DETAILS
SHARED-USE PATH BRIDGE OVER NORTH FORK INDIAN RUN ALONG MUIRFIELD DRIVE

BRAND ROAD
SHARED-USE PATH

File Name: O:\Projects\FRA\Dublin\Brand Road Multi-Use Path\structures\FRA000_0010C\sheets\000_0010C_AR001.dwg - Railing Detail
Modified / By: June 3, 2013 8:35:57 AM / AMoorman
Plotted / By: June 4, 2013 5:03:04 PM / Adam Moorman

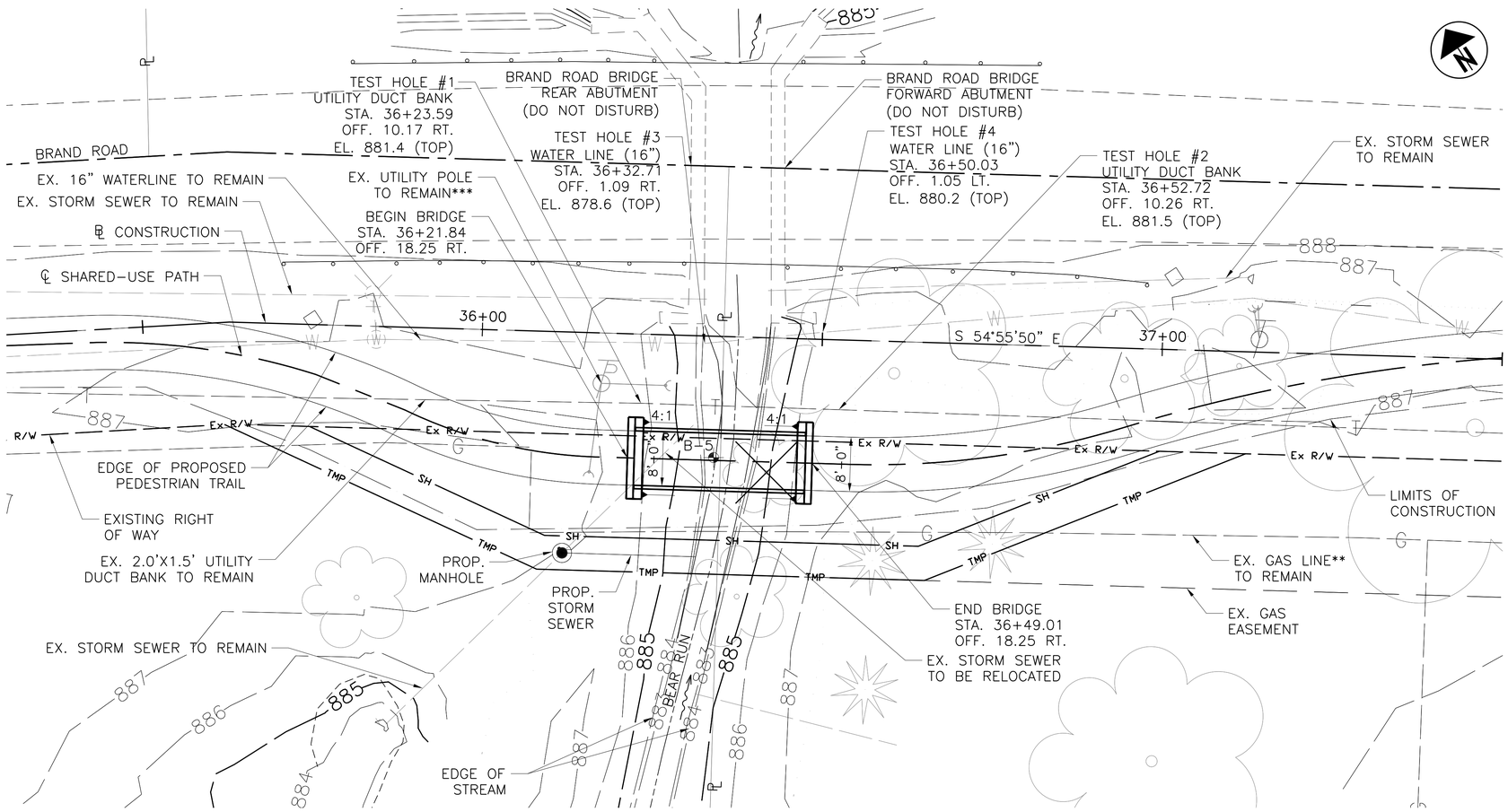

PLAN

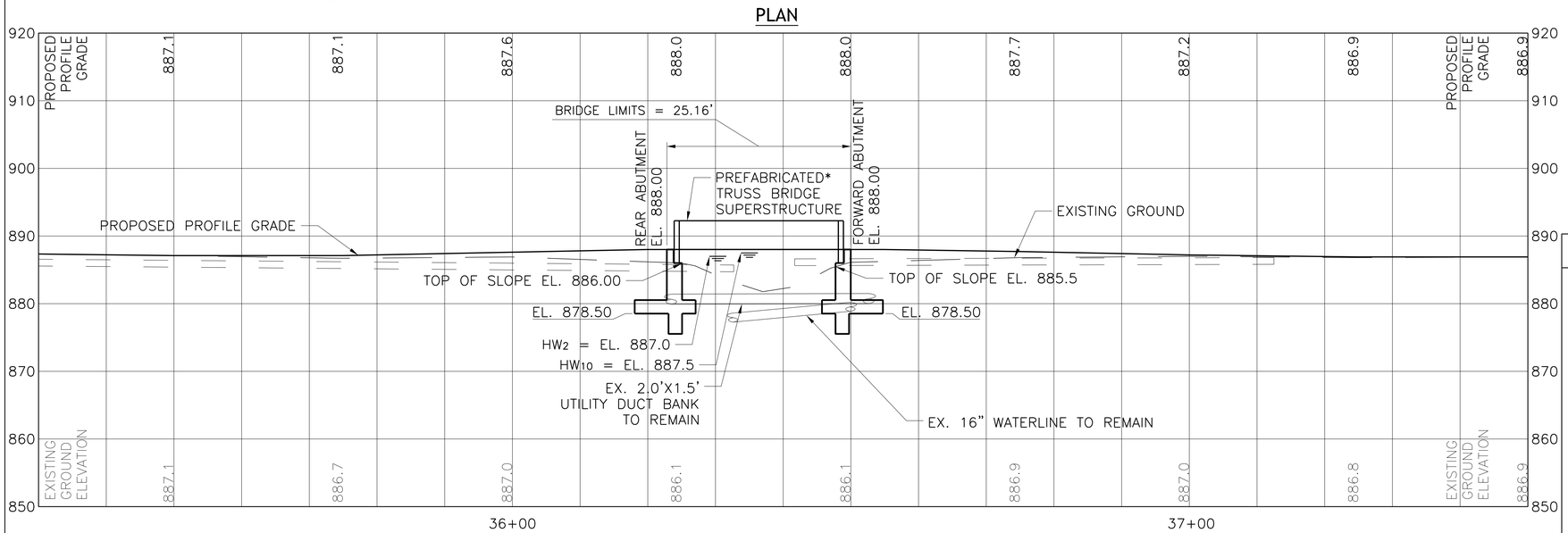

PROFILE ALONG ℄ SHARED-USE PATH

BENCHMARK DATA					
BM #1	STA. 36+22.12	ELEV. 888.98	OFFSET 44.86	LT.	
BM #2	STA. 39+34.28	ELEV. 887.82	OFFSET 52.40	LT.	

FOR ADDITIONAL BENCHMARK INFORMATION. SEE ROADWAY PLAN SHEET 15/49

NOTES

EARTHWORK LIMITS SHOWN ARE APPROXIMATE. ACTUAL SLOPES SHALL CONFORM TO PLAN CROSS SECTIONS.

0 10 20

SCALE: 1" = 10'

LEGEND

- BORING LOCATION
- * BOTTOM CHORD OF TRUSS SHALL BE AT ELEVATION 887.50 OR HIGHER
- ** CONTRACTOR SHALL PROTECT AND SUPPORT UTILITY TO REMAIN DURING CONSTRUCTION
- *** THE CONTRACTOR SHALL COORDINATE WITH THE UTILITY COMPANY(IES) TO SUPPORT AND PROTECT THE UTILITY POLE DURING CONSTRUCTION

HYDRAULIC DATA (Q'S PROVIDED BY CDM MODEL FROM THE CITY OF DUBLIN)

DRAINAGE AREA = 0.5 SQ. MILES
Q (2) = 81 CFS V (2) = 1.0 FT/S
Q (10) = 190 CFS V (10) = 1.5 FT/S
STRUCTURE CLEARS THE 2 YEAR
DESIGN HW BY 0.5 FEET.

PROPOSED STRUCTURE

TYPE: SINGLE SPAN PREFABRICATED STEEL TRUSS SUPERSTRUCTURE SUPPORTED ON REINFORCED CONCRETE ABUTMENTS

SPANS: 25'-0" OUT-TO-OUT BRIDGE TRUSS
ROADWAY: 8'-0" FACE/FACE TRUSS
LOADING: 85 PSF (PEDESTRIAN LOAD) AND 8 KIP VEHICLE
SKEW: 0° 00' 00"
APPROACH SLABS: NONE
ALIGNMENT: TANGENT
CROWN: LEVEL
COORDINATES: LATITUDE 40° 07'23" N
LONGITUDE 83° 08' 18" W

DESIGN AGENCY
THE ARMSTRONG
471 E. BROAD ST., SUITE 2010
COLUMBUS, OH 43215

DESIGNED	DRAWN	REVIEWED	DATE
ALM	ALM	FRR	06/2013
CHECKED	REVISED	STRUCTURE FILE NUMBER	
JNS		N/A	

FRANKLIN COUNTY
STA. 36+21.84
STA. 36+49.01

SITE PLAN
SHARED-USE PATH BRIDGE OVER BEAR RUN
ALONG BRAND ROAD

BRAND ROAD
SHARED-USE PATH

File Name: O:\Projects\FRA\Dublin\Brand Road Multi-Use Path\structures\FRA_C0044_0182\Csheets\C0044_0182C_SP001.dwg - Sheet
Modified / By: August 14, 2013 1:26:54 PM / AMoorman
Plotted / By: August 14, 2013 1:59:17 PM / Adam Moorman

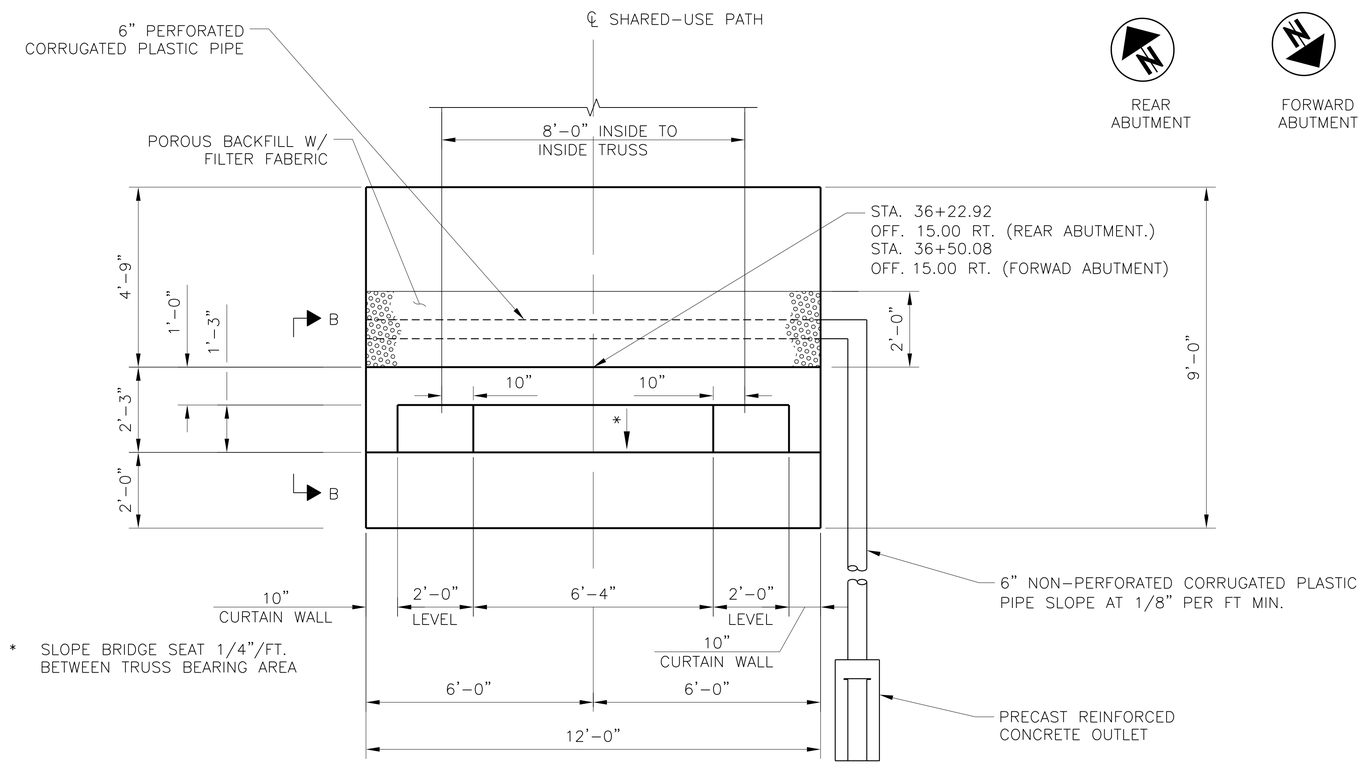

PLAN - ABUTMENT

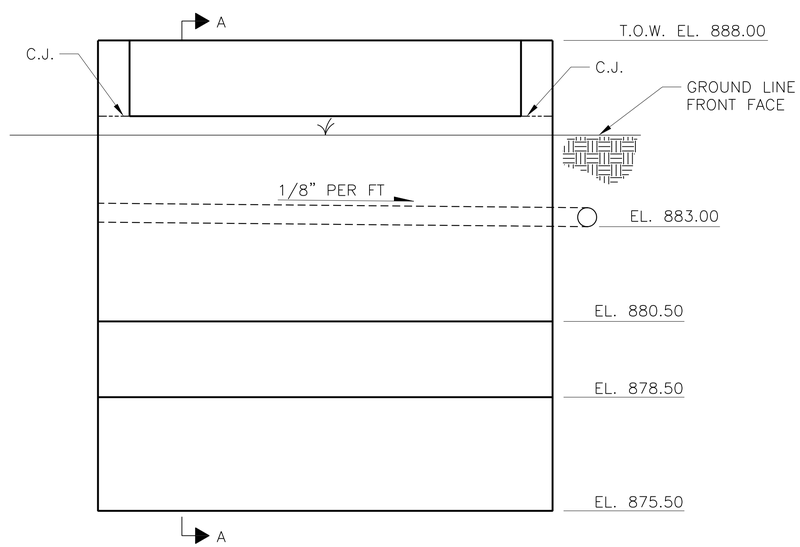

ELEVATION

MIN. LAP LENGTH

#5	3'-5"
#6	3'-5"

NOTE:

1. SEE SHEET 1/10 & 2/10 FOR GENERAL NOTES & ESTIMATED QUANTITIES.

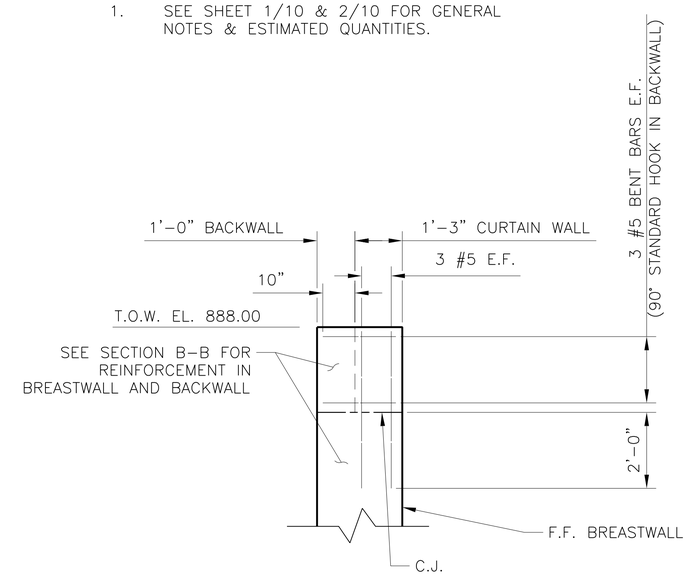

SECTION B-B

CURTAIN WALL REINFORCEMENT
(TYP. AT BOTH ABUTMENT ENDS)

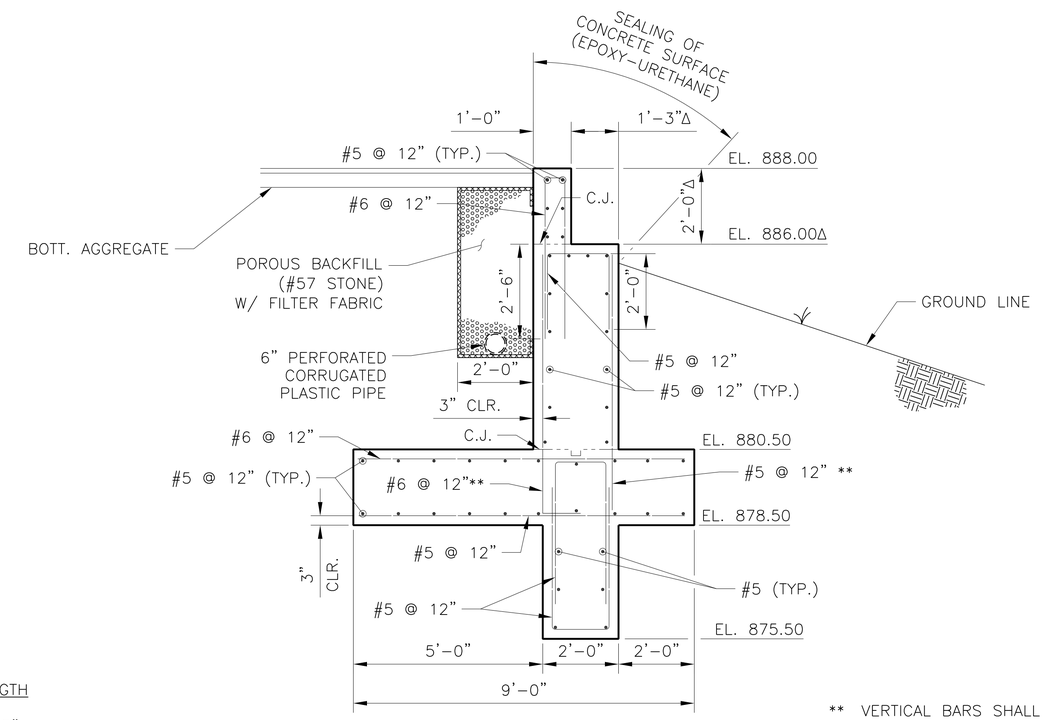

SECTION A-A

** VERTICAL BARS SHALL EXTEND TO BOTTOM REINFORCEMENT MAT.

Δ VERIFY DIMENSIONS WITH PREFABRICATED BRIDGE SHOP DRAWINGS

DESIGN AGENCY
THE ARMSTRONG
471 E. BROAD ST., SUITE 2010
COLUMBUS, OH 43215

DESIGNED	DRAWN	REVIEWED	DATE
ALM	ALM	FRR	06/2013
CHECKED	REVISED	STRUCTURE FILE NUMBER	
JNS		N/A	

ABUTMENT DETAILS

SHARED-USE PATH BRIDGE OVER BEAR RUN ALONG BRAND ROAD

BRAND ROAD SHARED-USE PATH

File Name: O:\Projects\FRA\Dublin\Brand Road Multi-Use Path\structures\FRA_C0044_0182C\sheets\C0044_0182C_AR001.dwg - Rear Abutment Details
Modified / By: August 13, 2013 3:19:45 PM / AMoorman
Plotted / By: August 13, 2013 3:20:09 PM / Adam Moorman