CITY OF DUBLIN
FLEET MAINTENANCE FACILITY
BUILDING EXPANSION

6351 SHIER RINGS ROAD
DUBLIN, OHIO 43016
PROJECT NO. 213052.00

JULY 31, 2013

CITY OF DUBLIN – ENGINEERING DIVISION – ADMINISTRATIVE POLICY/PROCEDURE NO. 95-011

GENERAL NOTES

1. CITY OF COLUMBUS AND OHIO DEPARTMENT OF TRANSPORTATION CONSTRUCTION AND MATERIAL SPECIFICATIONS, CURRENT EDITIONS, AND ANY SUPPLEMENTS THERETO (HEREAFTER REFERRED TO AS STANDARD SPECIFICATIONS), SHALL GOVERN ALL CONSTRUCTION ITEMS UNLESS OTHERWISE NOTED. IF A CONFLICT BETWEEN SPECIFICATIONS IS FOUND, THE MORE STRICT SPECIFICATION WILL APPLY AS DECIDED BY THE CITY ENGINEER. ITEM NUMBERS LISTED REFER TO CITY OF COLUMBUS ITEM NUMBERS UNLESS OTHERWISE NOTED.
2. THE CITY ENGINEER WILL NOT BE RESPONSIBLE FOR MEANS, METHODS, PROCEDURES, TECHNIQUES, OR SEQUENCES OF CONSTRUCTION THAT ARE NOT SPECIFIED HEREIN. THE CITY ENGINEER WILL NOT BE RESPONSIBLE FOR SAFETY ON THE WORK SITE, OR FOR FAILURE BY THE CONTRACTOR TO PERFORM WORK ACCORDING TO CONTRACT DOCUMENTS.
3. THE DEVELOPER OR CONTRACTOR SHALL BE RESPONSIBLE TO OBTAIN ALL NECESSARY PERMITS INCLUDING BUT NOT LIMITED TO OHIO EPA PERMITS TO INSTALL (PTI) AND NOTICES OF INTENT (NOI), BUILDING PERMITS, ETC.
4. THE CONTRACTOR SHALL NOTIFY THE CITY OF DUBLIN DIVISION OF ENGINEERING IN WRITING AT LEAST 3 WORKING DAYS PRIOR TO BEGINNING CONSTRUCTION.
5. THE CONTRACTOR SHALL BE SOLELY RESPONSIBLE FOR COMPLYING WITH ALL FEDERAL, STATE AND LOCAL SAFETY REQUIREMENTS INCLUDING THE OCCUPATIONAL SAFETY AND HEALTH ACT OF 1970. THE CONTRACTOR SHALL EXERCISE PRECAUTION ALWAYS FOR THE PROTECTION OF PERSONS (INCLUDING EMPLOYEES) AND PROPERTY. IT SHALL ALSO BE THE SOLE RESPONSIBILITY OF THE CONTRACTOR TO INITIATE, MAINTAIN AND SUPERVISE ALL SAFETY REQUIREMENTS, PRECAUTIONS AND PROGRAMS IN CONNECTION WITH THE WORK, INCLUDING THE REQUIREMENTS FOR CONFINED SPACES PER 29 CFR 1910.146.
6. FOLLOWING COMPLETION OF CONSTRUCTION OF THE SITE IMPROVEMENTS AND BEFORE REQUESTING OCCUPANCY, A PROOF SURVEY SHALL BE PROVIDED TO THE DIVISION OF ENGINEERING THAT DOCUMENTS "AS BUILT" ELEVATIONS, DIMENSIONS, SLOPES AND ALIGNMENTS OF ALL ELEMENTS OF THIS PROJECT. THE PROOF SURVEY SHALL BE PREPARED, SIGNED AND SUBMITTED BY THE PROFESSIONAL ENGINEER WHO SEALED THE CONSTRUCTIONS DRAWINGS.
7. DELETE.
8. THE CONTRACTOR SHALL CAREFULLY PRESERVE BENCHMARKS, PROPERTY CORNERS, REFERENCE POINTS, STAKES AND OTHER SURVEY REFERENCE MONUMENTS OR MARKERS. IN CASES OF WILLFUL OR CARELESS DESTRUCTION, THE CONTRACTOR SHALL BE RESPONSIBLE FOR RESTORATIONS. RESETTING OF MARKERS SHALL BE PERFORMED BY AN OHIO PROFESSIONAL SURVEYOR AS APPROVED BY THE CITY ENGINEER.
9. NON-RUBBER TIRED VEHICLES SHALL NOT BE MOVED ON OR ACROSS PUBLIC STREETS OR HIGHWAYS WITHOUT THE WRITTEN PERMISSION OF THE CITY ENGINEER.
10. THE CONTRACTOR SHALL RESTORE ALL DISTURBED AREAS TO EQUAL OR BETTER CONDITION THAN EXISTED BEFORE CONSTRUCTION. DRAINAGE DITCHES OR WATERCOURSES THAT ARE DISTURBED BY CONSTRUCTION SHALL BE RESTORED TO THE GRADES AND CROSS-SECTIONS THAT EXISTED BEFORE CONSTRUCTION.
11. TRACKING OR SPILLING MUD, DIRT OR DEBRIS UPON STREETS, RESIDENTIAL OR COMMERCIAL DRIVES, SIDEWALKS OR BIKE PATHS IS PROHIBITED ACCORDING TO SECTION 97.38 OF THE DUBLIN CODE OF ORDINANCES. ANY SUCH OCCURRENCE SHALL BE CLEANED UP IMMEDIATELY BY THE CONTRACTOR AT NO COST TO THE CITY. IF THE CONTRACTOR FAILS TO REMOVE SAID MUD, DIRT, DEBRIS, OR SPILLAGE, THE CITY RESERVES THE RIGHT TO REMOVE THESE MATERIALS AND CLEAN AFFECTED AREAS, THE COST OF WHICH SHALL BE THE RESPONSIBILITY OF THE CONTRACTOR.
12. DISPOSAL OF EXCESS EXCAVATION WITHIN SPECIAL FLOOD HAZARD AREAS (100-YEAR FLOODPLAIN) IS NOT PERMITTED.
13. ALL SIGNS, LANDSCAPING, STRUCTURES OR OTHER APPURTENANCES WITHIN RIGHT-OF-WAY DISTURBED OR DAMAGED DURING CONSTRUCTION SHALL BE REPLACED OR REPAIRED TO THE SATISFACTION OF THE CITY ENGINEER. THE COST OF THIS WORK SHALL BE THE RESPONSIBILITY OF THE CONTRACTOR.
14. ALL FIELD TILE BROKEN OR ENCOUNTERED DURING EXCAVATION SHALL BE REPLACED OR REPAIRED AND CONNECTED TO THE PUBLIC STORM SEWER SYSTEM AS DIRECTED BY THE CITY ENGINEER. THE COST OF THIS WORK SHALL BE THE RESPONSIBILITY OF THE CONTRACTOR.
15. DELETE.
16. BACKFILL WITHIN A 1:1 INFLUENCE LINE OF EXISTING STRUCTURES (HOUSES, GARAGES, ETC.) OR PUBLIC INFRASTRUCTURE (PAVEMENT, CURBS, SIDEWALKS, BIKE PATHS, ETC.) SHALL BE COMPACTED GRANULAR BACKFILL ACCORDING TO ITEM 912 OF THE STANDARD SPECIFICATIONS OR FLOWABLE CDF, TYPE III ACCORDING TO ITEM 636. ITEM 911 OF THE STANDARD SPECIFICATIONS SHALL BE USED ELSEWHERE.
17. THE CONTRACTOR SHALL SUBMIT A COPY OF THE APPROVED CONSTRUCTION DRAWINGS AND A LIST OF PROPOSED PRECAST CONCRETE PRODUCT MANUFACTURERS TO THE CITY OF COLUMBUS CONSTRUCTION INSPECTION DIVISION BEFORE COMMENCING CONSTRUCTION.

    SEND THE INFORMATION TO THE FOLLOWING ADDRESS:

    CONSTRUCTION INSPECTION DIVISION
    CITY OF COLUMBUS
    1800 EAST 17TH AVENUE
    COLUMBUS, OHIO 43219

    SEND A COPY OF THE TRANSMITTAL LETTER TO THE FOLLOWING ADDRESS:

    DIVISION OF ENGINEERING
    CITY OF DUBLIN
    5800 SHIER RINGS ROAD
    DUBLIN, OHIO 43016
18. DELETE.
19. ALL TREES WITHIN THE CONSTRUCTION AREA NOT SPECIFICALLY DESIGNATED FOR REMOVAL SHALL BE PRESERVED, WHETHER SHOWN OR NOT SHOWN ON THE APPROVED CONSTRUCTION DRAWINGS. TREES TO BE PRESERVED SHALL BE PROTECTED WITH HIGH VISIBILITY FENCING PLACED A MINIMUM 15 FEET FROM THE TREE TRUNK. TREES 6 – INCHES OR GREATER AT DBH (DIAMETER BREAST HEIGHT) MUST BE PROTECTED WITH FENCING PLACED AT THE CRITICAL ROOT ZONE OR 15 FEET, WHICHEVER IS GREATER. TREES NOT INDICATED ON THE APPROVED CONSTRUCTION DRAWINGS FOR REMOVAL MAY NOT BE REMOVED WITHOUT PRIOR APPROVAL OF THE DIVISION OF ENGINEERING.
20. DELETE.
21. DELETE.
22. PAVEMENTS SHALL BE CUT IN NEAT, STRAIGHT LINES THE FULL DEPTH OF THE EXISTING PAVEMENT, OR AS REQUIRED BY THE CITY ENGINEER. PAVEMENT REPLACEMENT SHALL BE CONDUCTED ACCORDING TO CITY OF COLUMBUS STANDARD DRAWING 1441 DR. A AND APPLICABLE CITY OF DUBLIN STANDARD DRAWINGS. THE REPLACEMENT OF DRIVEWAYS, HANDICAPPED RAMPS, SIDEWALKS, BIKE PATHS, PARKING LOT PAVEMENT, ETC. SHALL BE PROVIDED ACCORDING TO THE APPROVED CONSTRUCTION DRAWINGS AND CITY OF DUBLIN STANDARD CONSTRUCTION DRAWINGS.
23. TREE TRIMMING WITHIN THE CONSTRUCTION ZONE IS TO BE COMPLETED BY A CERTIFIED ARBORIST. AT THE COMPLETION OF THE PROJECT, THE ARBORIST IS TO RETURN AND TRIM ANY BROKEN BRANCHES AS NEEDED.
24. ANY MODIFICATION TO THE WORK SHOWN ON DRAWINGS MUST HAVE PRIOR WRITTEN APPROVAL BY THE CITY ENGINEER, CITY OF DUBLIN.
25. ALL INLETS SHALL BE CHANNELIZED.
26. PARK AREAS SHALL BE FINE-GRADED AND SEEDED WITH THE FOLLOWING MIXTURE:

    IMPROVED KENTUCKY BLUEGRASS: 40% OF WEIGHT (2 VARIETIES IN EQUAL PARTS)
    IMPROVED PERENNIAL RYE: 60% OF WEIGHT (2 VARIETIES IN EQUAL PARTS)
    GERMINATION RATE: 85%
    APPLICATION RATE: 7 LBS PER 1000 SQ FT OR AS DIRECTED BY THE DIVISION OF PARKS AND RECREATION, CITY OF DUBLIN, OHIO.

27 – 28. DELETE.

UTILITIES

1. THE FOLLOWING UTILITIES ARE KNOWN TO BE LOCATED WITHIN THE LIMITS OF THIS PROJECT:

    POWER: AEP: 800-277-2177
    WATER: PRIVATE LINES OWNED BY CITY OF DUBLIN; SUPPLIED BY CITY OF COLUMBUS: 614-645-6186
    NATURAL GAS: PRIVATE LINES OWNED BY CITY OF DUBLIN; SUPPLIED BY COLUMBIA GAS OF OHIO, INC.: 800-344-4077
    SANITARY AND STORM: CITY OF DUBLIN, DIVISION OF STREET AND UTILITIES: 614-410-4750
2. THE CONTRACTOR SHALL GIVE NOTICE OF INTENT TO CONSTRUCT TO OHIO UTILITIES PROTECTION SERVICE (TELEPHONE NUMBER 800-362-2764), PRODUCER'S UNDERGROUND PROTECTION SERVICE (TELEPHONE NUMBER 614-587-0486), AND TO OWNERS OF UNDERGROUND UTILITIES THAT ARE NOT MEMBERS OF A REGISTERED UNDERGROUND PROTECTION SERVICE. NOTICE SHALL BE GIVEN AT LEAST 2 WORKING DAYS BEFORE START OF CONSTRUCTION.
3. THE IDENTITY AND LOCATIONS OF EXISTING UNDERGROUND UTILITIES IN THE CONSTRUCTION AREA HAVE BEEN SHOWN ON THE APPROVED CONSTRUCTION DRAWINGS AS ACCURATELY AS PROVIDED BY THE OWNER OF THE UNDERGROUND UTILITY. THE CITY OF DUBLIN AND THE CITY ENGINEER ASSUMES NO RESPONSIBILITY FOR THE ACCURACY OR DEPTHS OF UNDERGROUND FACILITIES SHOWN ON THE APPROVED CONSTRUCTION DRAWINGS. IF DAMAGE IS CAUSED, THE CONTRACTOR SHALL BE RESPONSIBLE FOR REPAIR OF THE SAME AND FOR ANY RESULTING CONTINGENT DAMAGE.
4. LOCATION, SUPPORT, PROTECTION AND RESTORATION OF ALL EXISTING UTILITIES AND APPURTENANCES, WHETHER SHOWN OR NOT SHOWN ON THE APPROVED CONSTRUCTION DRAWINGS, SHALL BE THE RESPONSIBILITY OF THE CONTRACTOR.
5. WHEN UNKNOWN OR INCORRECTLY LOCATED UNDERGROUND UTILITIES ARE ENCOUNTERED DURING CONSTRUCTION, THE CONTRACTOR SHALL IMMEDIATELY NOTIFY THE OWNER AND THE CITY ENGINEER.
6. DELETE.

SHEET INDEX

COVER

G0.1 INDEX MAP & STAKING PLAN
G1.1 DEMOLITION PLAN
G2.1 UTILITY, GRADING AND EROSION CONTROL PLAN
G2.2 EARTHWORK SPECIFICATIONS AND EROSION CONTROL NOTES AND DETAILS
G3.1 LAYOUT PLAN
G4.1 DETAILS, SECTIONS AND FENCE SPECIFICATIONS

S1.1 FOUNDATION/ROOF FRAMING PLAN
S1.2 DETAILS
S1.3 ELEVATIONS
S1.4 GENERAL STRUCTURAL NOTES

E1.1 ELECTRICAL SYMBOL LEGEND, ABBREVIATIONS AND SPECIFICATIONS
E1.2 LIGHTING PROTECTION SYSTEM SPECIFICATIONS
E2.1 ELECTRICAL PLAN

BENCHMARK

#1 I.P. CAPSET
ELEVATION 924.85
NAV DATUM 1988

#2 MAGSET
ELEVATION 924.86
NAV DATUM 1988

OWNER ADDRESS
CITY OF DUBLIN
6351 SHIER RINGS ROAD
DUBLIN, OHIO 43016
PHONE: 614-410-4770
FAX: 614-410-4795

APPLICANT:
FANNING HOWEY ASSOCIATES, INC.
4930 BRADENTON AVE.
DUBLIN, OHIO 43017
PHONE: 614-764-4661
FAX: 614-764-7894

STRUCTURAL ENGINEER:
JEZERINAC GEERS AND ASSOCIATES, INC.
5640 FRANTZ ROAD
DUBLIN, OHIO 43017
PHONE: 614-766-0066
FAX: 614-766-1223

TRAFFIC CONTROL

1 – 5. DELETE.

EROSION AND SEDIMENT CONTROL

1. DELETE.
2. THE CONTRACTOR SHALL PROVIDE SEDIMENT CONTROL AT ALL POINTS WHERE STORM WATER RUNOFF LEAVES THE PROJECT, INCLUDING WATERWAYS, OVERLAND SHEET FLOW, AND STORM SEWERS.
3. ACCEPTED METHODS OF PROVIDING EROSION/SEDIMENT CONTROL INCLUDE BUT ARE NOT LIMITED TO: SEDIMENT BASINS, SILT FILTER FENCE, AGGREGATE CHECK DAMS, AND TEMPORARY GROUND COVER. HAY OR STRAW BALES ARE NOT PERMITTED.
4. THE CONTRACTOR SHALL PROVIDE ADEQUATE DRAINAGE OF THE WORK AREA AT ALL TIMES CONSISTENT WITH EROSION CONTROL PRACTICES.
5. DISTURBED AREAS THAT WILL REMAIN UNWORKED FOR 30 DAYS OR MORE SHALL BE SEEDED OR PROTECTED WITHIN SEVEN CALENDAR DAYS OF THE DISTURBANCE. OTHER SEDIMENT CONTROLS THAT ARE INSTALLED SHALL BE MAINTAINED UNTIL VEGETATIVE GROWTH HAS BEEN ESTABLISHED. THE CONTRACTOR SHALL BE RESPONSIBLE FOR THE REMOVAL OF ALL TEMPORARY SEDIMENT DEVICES AT THE CONCLUSION OF CONSTRUCTION BUT NOT BEFORE GROWTH OF PERMANENT GROUND COVER.

BLASTING (IF PERMITTED)

1. THE CONTRACTOR MUST OBTAIN A BLASTING PERMIT FROM WASHINGTON TOWNSHIP FIRE DEPARTMENT PRIOR TO BLASTING FOR ROCK EXCAVATION. THE CONTRACTOR SHALL SUBMIT BLASTING REPORTS UPON COMPLETION OF BLASTING TO THE CITY ENGINEER, THE OWNER, AND THE OWNER'S ENGINEER. TOP OF ROCK ELEVATIONS SHALL BE SHOWN ON "AS-BUILT" CONSTRUCTION DRAWINGS.

SANITARY SEWERS

1 – 20. DELETE.

WATER LINE

1 – 17. DELETE.

STORM SEWER

1. ALL STORM WATER DETENTION AND RETENTION AREAS AND MAJOR FLOOD ROUTING SWALES SHALL BE CONSTRUCTED TO FINISH GRADE AND HYDRO-SEEDED AND HYDRO-MULCHED ACCORDING TO ITEMS 203 AND 659 OF THE STANDARD SPECIFICATIONS.

2 – 4. DELETE.

5. HEADWALLS AND ENDWALLS SHALL BE REQUIRED AT ALL STORM SEWER INLETS OR OUTLETS TO AND FROM STORMWATER MANAGEMENT FACILITIES. NATURAL STONE AND/OR BRICK APPROVED BY THE CITY ENGINEER SHALL BE PROVIDED ON ALL VISIBLE HEADWALLS AND/OR ENDWALLS SURFACES.
6. DELETE.
7. STORM SEWER OUTLETS GREATER THAN 18 INCHES IN DIAMETER ACCESSIBLE FROM STORMWATER MANAGEMENT FACILITIES OR WATERCOURSES SHALL BE PROVIDED WITH SAFETY GRATES, AS APPROVED BY THE CITY ENGINEER.

MAIL DELIVERY

1 – 2.DELETE.

USE OF FIRE HYDRANTS

1 – 2.DELETE.

SIGNATURES BELOW SIGNIFY CONCURRENCE WITH THE GENERAL PURPOSES AND GENERAL LOCATION OF THE PROJECT AND DOES NOT CONSTITUTE ASSURANCE TO OPERATE AS INTENDED. ALL TECHNICAL DETAILS REMAIN THE RESPONSIBILITY OF THE PROFESSIONAL CIVIL ENGINEER PREPARING THE PLANS.

APPROVED:

CITY ENGINEER, CITY OF DUBLIN, OHIO _____ DATE _____

DIRECTOR OF LAND USE & LONG RANGE PLANNING, CITY OF DUBLIN, OHIO _____ DATE _____

SITE LOCATION MAP

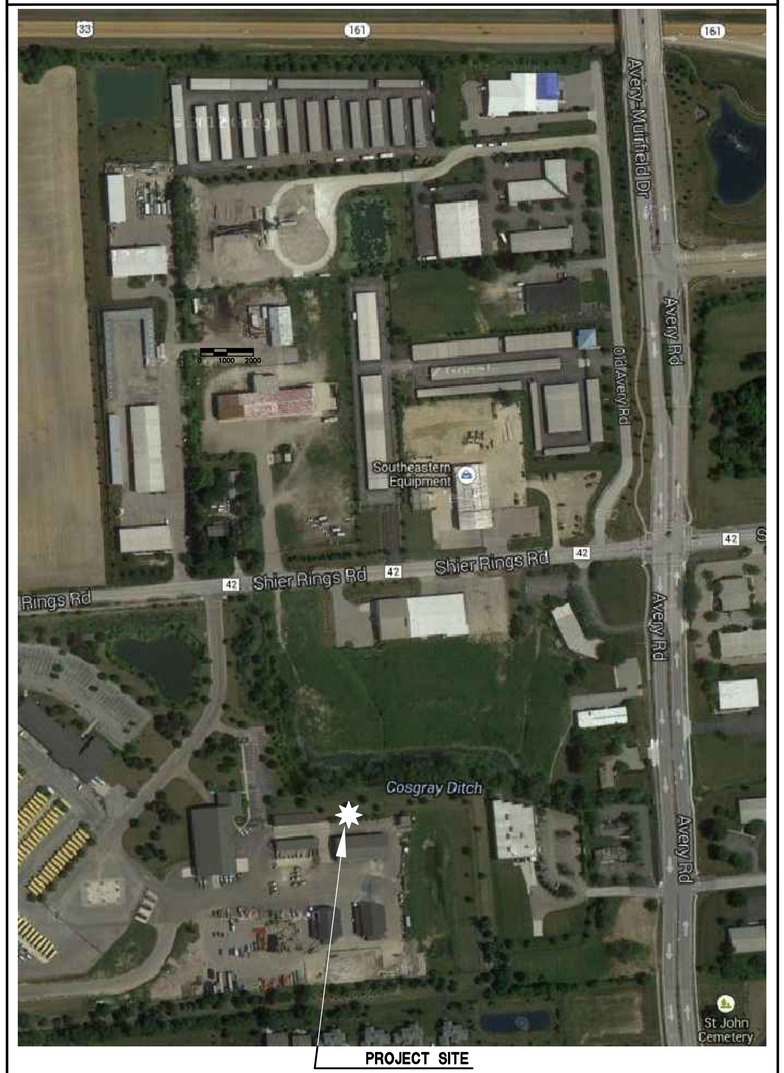

PROJECT SITE

SCALE: 1" = 200'-0"

COPYRIGHT 2013 BY FANNING/HOWEY ASSOCIATES, INC.

STATE OF OHIO · RANDAL L VANTILBURG · #69676 · REGISTERED PROFESSIONAL ENGINEER

FLEET MAINTENANCE FACILITY EXPANSION
CITY OF DUBLIN, OHIO

FANNING/HOWEY
614.764.4661 www.fhai.com

COVER SHEET

DRAWN BY: MDL
CHECKED BY: RVT
COMM. NO.: 213052.00
DATE: July 31, 2013

REVISIONS NO. DATE
#1 08/30/2013 ZONING
#2 11/04/2013 REBID

COVER

MAINTENANCE FACILITY EXPANSION
213052.00

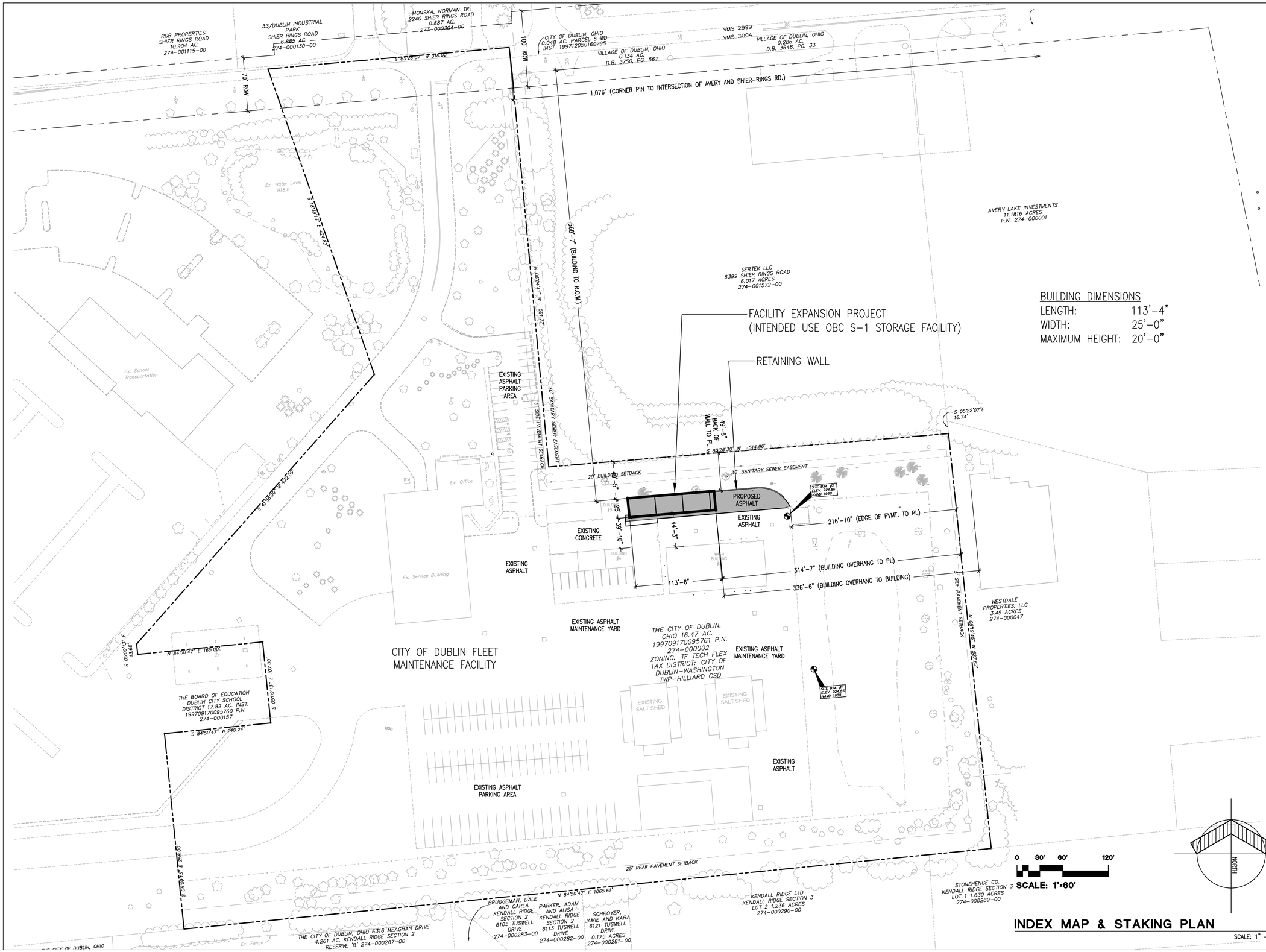

INDEX MAP & STAKING PLAN

SCALE: 1" = 60'-0"

COPYRIGHT 2013 BY FANNING/HOWEY ASSOCIATES, INC.

STATE OF OHIO · RANDAL L VANTILBURG · #69676 · REGISTERED PROFESSIONAL ENGINEER

FLEET MAINTENANCE FACILITY EXPANSION
CITY OF DUBLIN, OHIO

FANNING/HOWEY
614.764.4661 www.fhai.com

INDEX MAP & STAKING PLAN

DRAWN BY: MDL
CHECKED BY: RVT

COMM. NO.: 213052.00
DATE: July 31, 2013

REVISIONS NO.	DATE
#1	08/30/2013 ZONING
#2	11/04/2013 REBID

G0.1

MAINTENANCE FACILITY EXPANSION
213052.00

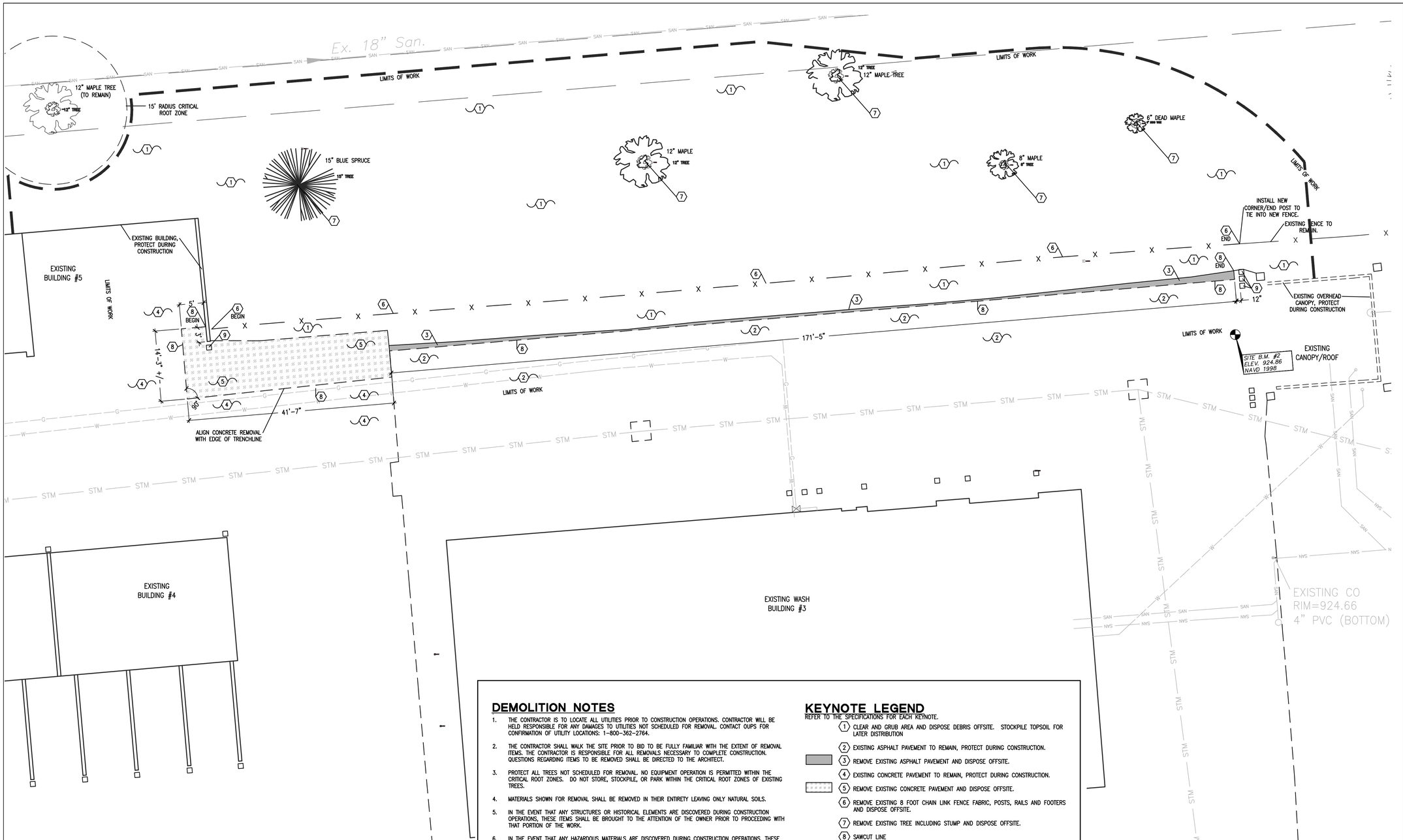

DEMOLITION NOTES

1. THE CONTRACTOR IS TO LOCATE ALL UTILITIES PRIOR TO CONSTRUCTION OPERATIONS. CONTRACTOR WILL BE HELD RESPONSIBLE FOR ANY DAMAGES TO UTILITIES NOT SCHEDULED FOR REMOVAL. CONTACT OUPS FOR CONFIRMATION OF UTILITY LOCATIONS: 1-800-362-2764.
2. THE CONTRACTOR SHALL WALK THE SITE PRIOR TO BID TO BE FULLY FAMILIAR WITH THE EXTENT OF REMOVAL ITEMS. THE CONTRACTOR IS RESPONSIBLE FOR ALL REMOVALS NECESSARY TO COMPLETE CONSTRUCTION. QUESTIONS REGARDING ITEMS TO BE REMOVED SHALL BE DIRECTED TO THE ARCHITECT.
3. PROTECT ALL TREES NOT SCHEDULED FOR REMOVAL. NO EQUIPMENT OPERATION IS PERMITTED WITHIN THE CRITICAL ROOT ZONES. DO NOT STORE, STOCKPILE, OR PARK WITHIN THE CRITICAL ROOT ZONES OF EXISTING TREES.
4. MATERIALS SHOWN FOR REMOVAL SHALL BE REMOVED IN THEIR ENTIRETY LEAVING ONLY NATURAL SOILS.
5. IN THE EVENT THAT ANY STRUCTURES OR HISTORICAL ELEMENTS ARE DISCOVERED DURING CONSTRUCTION OPERATIONS, THESE ITEMS SHALL BE BROUGHT TO THE ATTENTION OF THE OWNER PRIOR TO PROCEEDING WITH THAT PORTION OF THE WORK.
6. IN THE EVENT THAT ANY HAZARDOUS MATERIALS ARE DISCOVERED DURING CONSTRUCTION OPERATIONS, THESE ITEMS SHALL BE BROUGHT TO THE ATTENTION OF THE OWNER PRIOR TO PROCEEDING WITH THAT PORTION OF THE WORK.
7. EXCEPT FOR STRIPPED TOPSOIL OR OTHER MATERIALS INDICATED TO REMAIN AS OR ON OWNER'S PROPERTY, CLEARED MATERIALS SHALL BECOME CONTRACTOR'S PROPERTY AND SHALL BE REMOVED FROM PROJECT SITE AND DISPOSAL OF IN AN ACCEPTABLE MANNER.
8. STRIP TOPSOIL TO WHATEVER DEPTHS TOPSOIL MATERIALS ARE ENCOUNTERED IN A MANNER TO PREVENT INTERMINGLING WITH UNDERLYING SUBSOIL OR OTHER WASTE MATERIALS. REMOVE SOD AND GRASS BEFORE STRIPPING TOPSOIL. REMOVE SUBSOIL AND NONSOIL MATERIALS FROM TOPSOIL, INCLUDING TRASH, DEBRIS, WEEDS, ROOTS, AND OTHER WASTE MATERIALS AND DISPOSE OFFSITE.
9. OWNER WILL ARRANGE FOR DISCONNECTING AND SEALING INDICATED UTILITIES THAT SERVE EXISTING STRUCTURES BEFORE SITE CLEARING, WHEN REQUESTED BY CONTRACTOR. VERIFY THAT UTILITIES HAVE BEEN DISCONNECTED AND CAPPED BEFORE PROCEEDING WITH SITE CLEARING.
10. LOCATE, IDENTIFY, DISCONNECT, AND SEAL OR CAP OFF UTILITIES INDICATED TO BE REMOVED. OWNER WILL ARRANGE TO SHUT OFF INDICATED UTILITIES WHEN REQUESTED BY CONTRACTOR.
11. DO NOT INTERRUPT EXISTING UTILITIES SERVING FACILITIES OCCUPIED BY OWNER. NOTIFY A/E NOT LESS THAN TWO DAYS IN ADVANCE OF PROPOSED UTILITY INTERRUPTIONS. DO NOT PROCEED WITH UTILITY INTERRUPTIONS WITHOUT ARCHITECT'S WRITTEN PERMISSION.

KEYNOTE LEGEND

REFER TO THE SPECIFICATIONS FOR EACH KEYNOTE.

1. CLEAR AND GRUB AREA AND DISPOSE DEBRIS OFFSITE. STOCKPILE TOPSOIL FOR LATER DISTRIBUTION
2. EXISTING ASPHALT PAVEMENT TO REMAIN, PROTECT DURING CONSTRUCTION.
3. REMOVE EXISTING ASPHALT PAVEMENT AND DISPOSE OFFSITE.
4. EXISTING CONCRETE PAVEMENT TO REMAIN, PROTECT DURING CONSTRUCTION.
5. REMOVE EXISTING CONCRETE PAVEMENT AND DISPOSE OFFSITE.
6. REMOVE EXISTING 8 FOOT CHAIN LINK FENCE FABRIC, POSTS, RAILS AND FOOTERS AND DISPOSE OFFSITE.
7. REMOVE EXISTING TREE INCLUDING STUMP AND DISPOSE OFFSITE.
8. SAWCUT LINE
9. EXISTING BUMPER POST TO REMAIN. PROTECT DURING CONSTRUCTION

REMOVED TREES AND CALIPER

1 BLUE SPRUCE = 15" CALIPER
1 MAPLE TREE = 12" CALIPER
1 MAPLE TREE = 8" CALIPER
1 DEAD MAPLE TREE = 6" CALIPER

TOTAL CALIPER REPLACEMENT REQUIRED = 35"

0 5' 10' 20'

SCALE: 1"=10'

NORTH

DEMOLITION PLAN

SCALE: 1" = 10'-0"

COPYRIGHT 2013 BY FANNING/HOWEY ASSOCIATES, INC.

STATE OF OHIO · RANDAL L VANTILBURG · #69676 · REGISTERED · PROFESSIONAL · ENGINEER

FLEET MAINTENANCE FACILITY EXPANSION
CITY OF DUBLIN, OHIO

FANNING/HOWEY
614.764.4661 www.fhai.com

DEMOLITION PLAN

DRAWN BY: MDL
CHECKED BY: RVT

COMM. NO.: 213052.00
DATE: July 31, 2013

REVISIONS NO.	DATE
#1	08/30/2013 ZONING
#2	11/04/2013 REBID

G1.1

MAINTENANCE FACILITY EXPANSION
213052.00

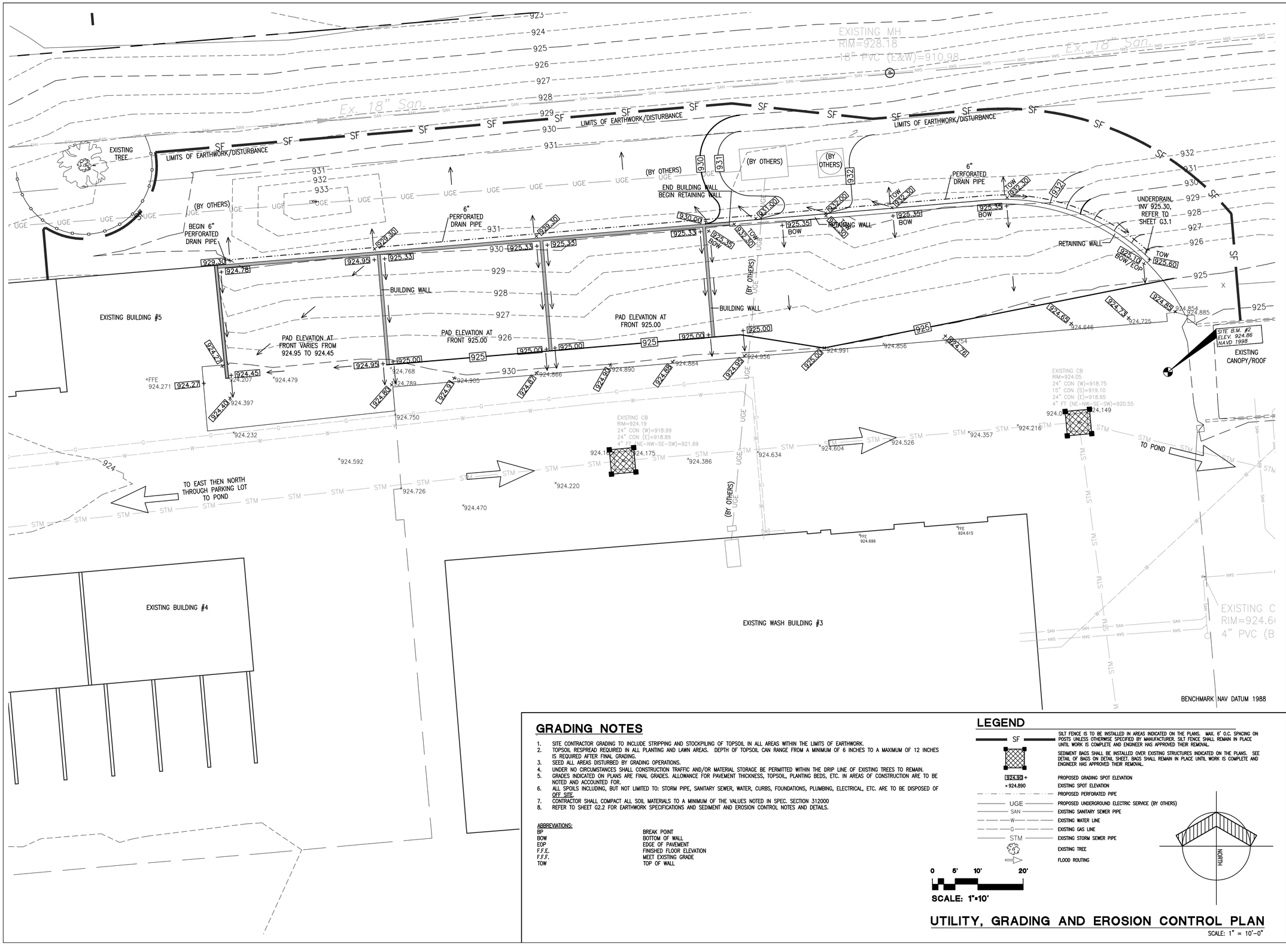

GRADING NOTES

1. SITE CONTRACTOR GRADING TO INCLUDE STRIPPING AND STOCKPILING OF TOPSOIL IN ALL AREAS WITHIN THE LIMITS OF EARTHWORK.
2. TOPSOIL RESPREAD REQUIRED IN ALL PLANTING AND LAWN AREAS. DEPTH OF TOPSOIL CAN RANGE FROM A MINIMUM OF 6 INCHES TO A MAXIMUM OF 12 INCHES IS REQUIRED AFTER FINAL GRADING.
3. SEED ALL AREAS DISTURBED BY GRADING OPERATIONS.
4. UNDER NO CIRCUMSTANCES SHALL CONSTRUCTION TRAFFIC AND/OR MATERIAL STORAGE BE PERMITTED WITHIN THE DRIP LINE OF EXISTING TREES TO REMAIN.
5. GRADES INDICATED ON PLANS ARE FINAL GRADES. ALLOWANCE FOR PAVEMENT THICKNESS, TOPSOIL, PLANTING BEDS, ETC. IN AREAS OF CONSTRUCTION ARE TO BE NOTED AND ACCOUNTED FOR.
6. ALL SPOILS INCLUDING, BUT NOT LIMITED TO: STORM PIPE, SANITARY SEWER, WATER, CURBS, FOUNDATIONS, PLUMBING, ELECTRICAL, ETC. ARE TO BE DISPOSED OF OFF SITE.
7. CONTRACTOR SHALL COMPACT ALL SOIL MATERIALS TO A MINIMUM OF THE VALUES NOTED IN SPEC. SECTION 312000
8. REFER TO SHEET G2.2 FOR EARTHWORK SPECIFICATIONS AND SEDIMENT AND EROSION CONTROL NOTES AND DETAILS.

ABBREVIATIONS:

BP	BREAK POINT
BOW	BOTTOM OF WALL
EOP	EDGE OF PAVEMENT
F.F.E.	FINISHED FLOOR ELEVATION
F.F.F.	MEET EXISTING GRADE
TOW	TOP OF WALL

LEGEND

SF	SILT FENCE IS TO BE INSTALLED IN AREAS INDICATED ON THE PLANS. MAX. 6' O.C. SPACING ON POSTS UNLESS OTHERWISE SPECIFIED BY MANUFACTURER. SILT FENCE SHALL REMAIN IN PLACE UNTIL WORK IS COMPLETE AND ENGINEER HAS APPROVED THEIR REMOVAL.
	SEDIMENT BAGS SHALL BE INSTALLED OVER EXISTING STRUCTURES INDICATED ON THE PLANS. SEE DETAIL OF BAGS ON DETAIL SHEET. BAGS SHALL REMAIN IN PLACE UNTIL WORK IS COMPLETE AND ENGINEER HAS APPROVED THEIR REMOVAL.
924.93 +	PROPOSED GRADING SPOT ELEVATION
×924.890	EXISTING SPOT ELEVATION
	PROPOSED PERFORATED PIPE
UGE	PROPOSED UNDERGROUND ELECTRIC SERVICE (BY OTHERS)
SAN	EXISTING SANITARY SEWER PIPE
W	EXISTING WATER LINE
G	EXISTING GAS LINE
STM	EXISTING STORM SEWER PIPE
	EXISTING TREE
	FLOOD ROUTING

0 5' 10' 20'

SCALE: 1"=10'

HUDSON

UTILITY, GRADING AND EROSION CONTROL PLAN

SCALE: 1" = 10'-0"

COPYRIGHT 2013 BY FANNING/HOWEY ASSOCIATES, INC.

STATE OF OHIO · RANDAL L VANTILBURG · #69676 · REGISTERED PROFESSIONAL ENGINEER

FLEET MAINTENANCE FACILITY EXPANSION
CITY OF DUBLIN, OHIO

FANNING/HOWEY
614.764.4661 www.fhai.com

UTILITY, GRADING AND EROSION CONTROL PLAN

DRAWN BY: MDL
CHECKED BY: RVT

COMM. NO.: 213052.00
DATE: July 31, 2013

REVISIONS NO.	DATE
#1	08/30/2013 ZONING
#2	11/04/2013 REBID

G2.1

MAINTENANCE FACILITY EXPANSION
213052.00

EARTHWORK SPECIFICATIONS

I. PROOF-ROLLING SUBGRADE:

A. AFTER TOPSOIL HAS BEEN STRIPPED PER DIVISION 31 SECTION "SITE CLEARING" AND EXCAVATION MADE TO REQUIRED SUBGRADE ELEVATIONS, PROOF ROLL AREAS TO BE OCCUPIED BY THE NEW BUILDINGS AND PAVED SURFACE AREAS USING A LOADED DUMP TRUCK OR SIMILAR RUBBER-TIRED EQUIPMENT WEIGHTING AT LEAST 20 TONS TO IDENTIFY SOFT POCKETS AND AREAS OF EXCESS YIELDING. DO NOT PROOF-ROLL WET OR SATURATED SUBGRADES. A REPRESENTATIVE FROM THE SOIL TESTING AND INSPECTION LABORATORY SHALL BE PRESENT DURING ALL PROOF ROLLING OPERATIONS.

1. COMPLETELY PROOF-ROLL SUBGRADE IN ONE DIRECTION, REPEATING PROOF-ROLLING IN DIRECTION PERPENDICULAR TO FIRST DIRECTION. LIMIT VEHICLE SPEED TO 3 MPH.
2. UNSUITABLE BEARING MATERIALS IN LAWN AREAS SHALL NOT BE EXCAVATED WITHOUT WRITTEN AUTHORIZATION FROM THE ARCHITECT. UNSUITABLE BEARING MATERIALS EXCAVATED IN LAWN AREAS SHALL BE CONSIDERED UNAUTHORIZED EXCAVATION AND SHALL BE REPLACED WITH SUITABLE BEARING MATERIALS WITH NO ADDITIONAL PAYMENT.
3. UNSUITABLE BEARING MATERIALS IN PAVED AREAS TO RECEIVE A BITUMINOUS OR AGGREGATE PAVEMENT STRUCTURE SHALL NOT BE UNDERCUT WITHOUT WRITTEN AUTHORIZATION FROM THE A/E. UNSUITABLE BEARING MATERIALS EXCAVATED IN PAVED AREAS WITHOUT WRITTEN APPROVAL FROM THE A/E SHALL BE CONSIDERED UNAUTHORIZED EXCAVATION. NO CONTRACT ADJUSTMENTS WILL BE MADE FOR UNAUTHORIZED EXCAVATION.
4. PRIOR TO EXCAVATION OF UNSUITABLE MATERIALS, THE CONTRACTOR SHALL REPORT TO THE SOILS ENGINEER AND/OR A/E THE QUANTITY OF UNSUITABLE SOIL TO BE EXCAVATED. THE CONTRACTOR SHALL REPORT THE FOLLOWING INFORMATION:
   a) QUANTITY IN CUBIC YARDS
   b) QUANTITY SQUARE YARDS
   c) THE AVERAGE DEPTH OF CUT.
5. NO ADDITIONAL PAYMENT WILL BE MADE TO DISC AND DRY.
6. RECONSTRUCT SUBGRADES DAMAGED BY FREEZING TEMPERATURES, FROST, RAIN, ACCUMULATED WATER, OR CONSTRUCTION ACTIVITIES, AS DIRECTED BY A/E, WITHOUT ADDITIONAL COMPENSATION.

II. GENERAL EXCAVATION

A. CLASSIFIED EXCAVATION: EXCAVATE TO SUBGRADE ELEVATIONS. MATERIAL TO BE EXCAVATED WILL BE CLASSIFIED AS EARTH AND ROCK. DO NOT EXCAVATE ROCK UNTIL IT HAS BEEN CLASSIFIED AND CROSS SECTIONED BY A/E. THE CONTRACT SUM WILL BE ADJUSTED FOR ROCK EXCAVATION ACCORDING TO UNIT PRICES INCLUDED IN THE CONTRACT DOCUMENTS. CHANGES IN THE CONTRACT TIME MAY BE AUTHORIZED FOR ROCK EXCAVATION.
1. EARTH EXCAVATION INCLUDES EXCAVATING PAVEMENTS AND OBSTRUCTIONS VISIBLE ON SURFACE; UNDERGROUND STRUCTURES, UTILITIES, AND OTHER ITEMS INDICATED TO BE REMOVED; TOGETHER WITH SOIL, BOULDERS, AND OTHER MATERIALS NOT CLASSIFIED AS ROCK OR UNAUTHORIZED EXCAVATION.
   a. INTERMITTENT DRILLING; BLASTING, IF PERMITTED; RAM HAMMERING; OR RIPPING OF MATERIAL NOT CLASSIFIED AS ROCK EXCAVATION IS EARTH EXCAVATION.
2. ROCK EXCAVATION INCLUDES REMOVAL AND DISPOSAL OF ROCK. REMOVE ROCK TO LINES AND SUBGRADE ELEVATIONS INDICATED TO PERMIT INSTALLATION OF PERMANENT CONSTRUCTION WITHOUT EXCEEDING THE FOLLOWING DIMENSIONS:
   a. 24 INCHES OUTSIDE OF CONCRETE FORMS OTHER THAN AT FOOTINGS.
   b. 12 INCHES OUTSIDE OF CONCRETE FORMS AT FOOTINGS.
   c. 6 INCHES OUTSIDE OF MINIMUM REQUIRED DIMENSIONS OF CONCRETE CAST AGAINST GRADE.
   d. OUTSIDE DIMENSIONS OF CONCRETE WALLS INDICATED TO BE CAST AGAINST ROCK WITHOUT FORMS OR EXTERIOR WATERPROOFING TREATMENTS.
   e. 6 INCHES BENEATH BOTTOM OF CONCRETE SLABS ON GRADE.
   f. 6 INCHES BENEATH PIPE IN TRENCHES, AND THE GREATER OF 24 INCHES WIDER THAN PIPE OR 42 INCHES WIDE.

B. ADDITIONAL EXCAVATION: WHEN EXCAVATION HAS REACHED REQUIRED SUBGRADE ELEVATIONS, NOTIFY SOILS ENGINEER AND A/E SO HE CAN OBSERVE CONDITIONS.
1. IF UNSUITABLE BEARING MATERIALS ARE ENCOUNTERED AT REQUIRED SUBGRADE ELEVATIONS, CARRY EXCAVATIONS DEEPER AND REPLACE EXCAVATED MATERIAL AS DIRECTED BY THE REPRESENTATIVE OF SOILS TESTING AND INSPECTION LABORATORY AFTER APPROVAL BY A/E.
2. REMOVAL OF UNSUITABLE MATERIAL AND ITS REPLACEMENT, AS DIRECTED, WILL BE PAID ON THE BASIS OF CONTRACT CONDITIONS RELATIVE TO CHANGES IN WORK.
3. THE ASSUMED QUANTITY OF ADDITIONAL EXCAVATION FOR BIDDING IS ZERO CUBIC YARDS, UNLESS OTHERWISE NOTED. AS SUCH, ALL FUTURE ESTIMATED QUANTITIES OF ADDITIONAL EXCAVATION SHOULD BE CONSIDERED A SUBSTANTIAL CHANGE IN QUANTITY.
4. ALL ADDITIONAL EXCAVATION OR ROCK EXCAVATION PERFORMED WITHOUT WRITTEN AUTHORIZATION BY THE A/E SHALL BE CONSIDERED UNAUTHORIZED EXCAVATION FOR WHICH NO ADDITIONAL PAYMENT WILL BE MADE.
5. ADDITIONAL EXCAVATION AND ITS REPLACEMENT WILL BE PAID FOR BASED ON CONTRACT PROVISIONS FOR CHANGES IN THE WORK OR UNIT PRICES WHERE APPLICABLE.

C. STABILITY OF EXCAVATIONS: SLOPE SIDES OF EXCAVATIONS TO COMPLY WITH CODES AND ORDINANCES HAVING JURISDICTION. SHORE AND BRACE WHERE SLOPING IS NOT POSSIBLE EITHER BECAUSE OF SPACE RESTRICTION OR STABILITY OF MATERIAL EXCAVATED.
1. MAINTAIN SIDES AND SLOPES OF EXCAVATIONS IN A SAFE CONDITION UNTIL COMPLETION OF BACKFILLING.
2. COMPLY WITH OSHA, "CONSTRUCTION STANDARDS FOR EXCAVATIONS, 29 CFR".

D. SHORING AND BRACING: PROVIDE MATERIALS FOR SHORING AND BRACING SUCH AS SHEET PILING, UPRIGHTS, STRINGERS, AND CROSS_BRACES IN GOOD SERVICEABLE CONDITION.
1. PROVIDE MINIMUM REQUIREMENTS FOR TRENCH SHORING AND BRACING TO COMPLY WITH LOCAL CODES AND AUTHORITIES HAVING JURISDICTION.
2. MAINTAIN SHORING AND BRACING IN EXCAVATIONS REGARDLESS OF TIME PERIOD EXCAVATIONS WILL BE OPEN. CARRY DOWN SHORING AND BRACING AS EXCAVATION PROGRESSES.

E. DEWATERING: PREVENT SURFACE WATER AND SUBSURFACE OR GROUNDWATER FROM FLOWING INTO EXCAVATIONS AND FROM FLOODING PROJECT SITE AND SURROUNDING AREA.
1. DO NOT ALLOW WATER TO ACCUMULATE IN EXCAVATIONS. REMOVE WATER TO PREVENT SOFTENING OF PAVEMENT SUBGRADE, FOUNDATION BOTTOMS, UNDERCUTTING FOOTINGS, AND SOIL CHANGES DETRIMENTAL TO STABILITY OF SUBGRADES AND FOUNDATIONS. PROVIDE AND MAINTAIN PUMPS, SUMPS, SUCTION, AND DISCHARGE LINES, AND OTHER DEWATERING SYSTEM COMPONENTS NECESSARY TO CONVEY WATER AWAY FROM EXCAVATIONS.
2. CONVEY WATER REMOVED FROM EXCAVATIONS AND RAINWATER TO COLLECTING OR RUNOFF AREAS. PROVIDE AND MAINTAIN TEMPORARY DRAINAGE DITCHES AND OTHER DIVERSIONS OUTSIDE EXCAVATION LIMITS FOR EACH STRUCTURE. DO NOT USE TRENCH EXCAVATIONS AS TEMPORARY DRAINAGE DITCHES.

III. SOIL MOISTURE CONTROL

A. UNIFORMLY MOISTEN OR AERATE SUBGRADE AND EACH SUBSEQUENT FILL OR BACKFILL SOIL LAYER BEFORE COMPACTION TO WITHIN 2 PERCENT OF OPTIMUM MOISTURE CONTENT AS INDICATED IN GEOTECHNICAL REPORT.
1. DO NOT PLACE BACKFILL OR FILL SOIL MATERIAL ON SURFACES THAT ARE MUDDY, FROZEN, OR CONTAIN FROST OR ICE.
2. REMOVE AND REPLACE, OR SCARIFY AND AIR DRY OTHERWISE SATISFACTORY SOIL MATERIAL THAT EXCEEDS OPTIMUM MOISTURE CONTENT BY 2 PERCENT AND IS TOO WET TO COMPACT TO SPECIFIED DRY UNIT WEIGHT.

IV. SOIL FILL

A. DISC, SCARIFY, BENCH, OR BREAK UP SLOPED SURFACES STEEPER THAN 1 VERTICAL TO 4 HORIZONTAL SO FILL MATERIAL WILL BOND WITH EXISTING MATERIAL.
B. PLACE AND COMPACT FILL MATERIAL IN LAYERS TO REQUIRED ELEVATIONS AS FOLLOWS:
1. UNDER GRASS AND PLANTED AREAS, USE SATISFACTORY SOIL MATERIAL TO WHERE TOPSOIL BEGINS.
2. UNDER WALKS AND STOOPS, USE SATISFACTORY SOIL MATERIAL TO 4 INCHES BELOW CONCRETE THEN USE SUBBASE MATERIAL.
3. UNDER BUILDING SLABS, USE ENGINEERED FILL TO ESTABLISH SUBGRADE.
   a. REFER TO DIVISION 03 SECTION "CAST-IN-PLACE CONCRETE" FOR DRAINAGE FILL.
4. UNDER FOOTINGS AND FOUNDATIONS, LEAN CONCRETE OR CONTROLLED LOW-STRENGTH MATERIAL, UNLESS OTHERWISE APPROVED BY A/E AND GEOTECHNICAL ENGINEER.

V. GRADING

A. GENERAL: UNIFORMLY GRADE AREAS TO A SMOOTH SURFACE, FREE OF IRREGULAR SURFACE CHANGES. COMPLY WITH COMPACTION REQUIREMENTS AND GRADE TO CROSS SECTIONS, LINES, AND ELEVATIONS INDICATED.
1. PROVIDE A SMOOTH TRANSITION BETWEEN ADJACENT EXISTING GRADES AND NEW GRADES.
2. CUT OUT SOFT SPOTS, FILL LOW SPOTS, AND TRIM HIGH SPOTS TO COMPLY WITH REQUIRED SURFACE TOLERANCES.
B. SITE-ROUGH GRADING: SLOPE GRADES TO DIRECT WATER AWAY FROM BUILDINGS AND TO PREVENT PONDING. FINISH SUBGRADES TO REQUIRED ELEVATIONS WITHIN THE FOLLOWING TOLERANCES:
1. LAWN OR UNPAVED AREAS: PLUS OR MINUS 1 INCH.
2. WALKS: PLUS OR MINUS 1 INCH.
3. PAVEMENTS: PLUS OR MINUS 1/2 INCH.
C. GRADING INSIDE BUILDING LINES: FINISH SUBGRADE TO A TOLERANCE OF 1/2 INCH WHEN TESTED WITH A 10-FOOT STRAIGHTEDGE.

VI. SUBSURFACE DRAINAGE

A. SUBDRAINAGE PIPE: SPECIFIED IN DIVISION 33 SECTION "SUBDRAINAGE."
B. SUBSURFACE DRAIN: PLACE SUBSURFACE DRAINAGE GEOTEXTILE AROUND PERIMETER OF SUBDRAINAGE TRENCH. PLACE A 6-INCH COURSE OF FILTER MATERIAL ON SUBSURFACE DRAINAGE GEOTEXTILE TO SUPPORT SUBDRAINAGE PIPE. ENCASE SUBDRAINAGE PIPE IN A MINIMUM OF 12 INCHES OF FILTER MATERIAL, PLACED IN COMPACTED LAYERS 6 INCHES THICK, AND WRAP IN SUBSURFACE DRAINAGE GEOTEXTILE, OVERLAPPING SIDES AND ENDS AT LEAST 6 INCHES.
1. COMPACT EACH FILTER MATERIAL LAYER TO 85 PERCENT OF MAXIMUM DRY UNIT WEIGHT ACCORDING TO ASTM D 698.
C. DRAINAGE BACKFILL: PLACE AND COMPACT FILTER MATERIAL OVER SUBSURFACE DRAIN, IN WIDTH INDICATED, TO WITHIN 12 INCHES OF FINAL SUBGRADE, IN COMPACTED LAYERS 6 INCHES THICK. OVERLAY DRAINAGE BACKFILL WITH 1 LAYER OF SUBSURFACE DRAINAGE GEOTEXTILE, OVERLAPPING SIDES AND ENDS AT LEAST 6 INCHES.
1. COMPACT EACH FILTER MATERIAL LAYER TO 85 PERCENT OF MAXIMUM DRY UNIT WEIGHT ACCORDING TO ASTM D 698.

VII. COMPACTION OF SOIL BACKFILLS AND FILLS

A. PLACE BACKFILL AND FILL SOIL MATERIALS IN LAYERS NOT MORE THAN 8 INCHES IN LOOSE DEPTH FOR MATERIAL COMPACTED BY HEAVY COMPACTION EQUIPMENT, AND NOT MORE THAN 4 INCHES IN LOOSE DEPTH FOR MATERIAL COMPACTED BY HAND-OPERATED TAMPERS.
B. PLACE BACKFILL AND FILL SOIL MATERIALS EVENLY ON ALL SIDES OF STRUCTURES TO REQUIRED ELEVATIONS, AND UNIFORMLY ALONG THE FULL LENGTH OF EACH STRUCTURE.
C. COMPACT SOIL MATERIALS TO NOT LESS THAN THE VALUES IN THE SOILS REPORT AND THE FOLLOWING PERCENTAGES OF MAXIMUM DRY UNIT WEIGHT ACCORDING TO ASTM D 698 (STANDARD):
1. UNDER STRUCTURES, BUILDING SLABS AND PAVEMENTS, SCARIFY AND RECOMPACT TOP 12 INCHES OF EXISTING SUBGRADE AND EACH LAYER OF BACKFILL OR FILL SOIL MATERIAL AT 95 PERCENT.
2. UNDER WALKWAYS, SCARIFY AND RECOMPACT TOP 6 INCHES BELOW SUBGRADE AND COMPACT EACH LAYER OF BACKFILL OR FILL SOIL MATERIAL AT 92 PERCENT.
3. UNDER LAWN OR UNPAVED AREAS, SCARIFY AND RECOMPACT TOP 6 INCHES BELOW SUBGRADE AND COMPACT EACH LAYER OF BACKFILL OR FILL SOIL MATERIAL AT 85 PERCENT.
4. FOR UTILITY TRENCHES, COMPACT EACH LAYER OF INITIAL AND FINAL BACKFILL SOIL MATERIAL AT 95 PERCENT WITHIN AREAS UNDER BUILDINGS, STRUCTURES, WALKS AND PAVEMENTS AND TO 92 PERCENT MINIMUM WITHIN LAWN OR OTHER AREAS.

VIII. GRADING

A. GENERAL: UNIFORMLY GRADE AREAS TO A SMOOTH SURFACE, FREE OF IRREGULAR SURFACE CHANGES. COMPLY WITH COMPACTION REQUIREMENTS AND GRADE TO CROSS SECTIONS, LINES, AND ELEVATIONS INDICATED.
1. PROVIDE A SMOOTH TRANSITION BETWEEN ADJACENT EXISTING GRADES AND NEW GRADES.
2. CUT OUT SOFT SPOTS, FILL LOW SPOTS, AND TRIM HIGH SPOTS TO COMPLY WITH REQUIRED SURFACE TOLERANCES.
B. SITE-ROUGH GRADING: SLOPE GRADES TO DIRECT WATER AWAY FROM BUILDINGS AND TO PREVENT PONDING. FINISH SUBGRADES TO REQUIRED ELEVATIONS WITHIN THE FOLLOWING TOLERANCES:
1. LAWN OR UNPAVED AREAS: PLUS OR MINUS 1 INCH.
2. WALKS: PLUS OR MINUS 1 INCH.
3. PAVEMENTS: PLUS OR MINUS 1/2 INCH.
C. GRADING INSIDE BUILDING LINES: FINISH SUBGRADE TO A TOLERANCE OF 1/2 INCH WHEN TESTED WITH A 10-FOOT STRAIGHTEDGE.

IX. FIELD QUALITY CONTROL

A. TESTING AGENCY: OWNER WILL ENGAGE A QUALIFIED INDEPENDENT GEOTECHNICAL ENGINEERING TESTING AGENCY TO PERFORM FIELD QUALITY-CONTROL TESTING.
B. ALLOW TESTING AGENCY TO INSPECT AND TEST SUBGRADES AND EACH FILL OR BACKFILL LAYER. PROCEED WITH SUBSEQUENT EARTHWORK ONLY AFTER TEST RESULTS FOR PREVIOUSLY COMPLETED WORK COMPLY WITH REQUIREMENTS.
C. FOOTING SUBGRADE: AT FOOTING SUBGRADES, AT LEAST ONE TEST OF EACH SOIL STRATUM WILL BE PERFORMED TO VERIFY DESIGN BEARING CAPACITIES. SUBSEQUENT VERIFICATION AND APPROVAL OF OTHER FOOTING SUBGRADES MAY BE BASED ON A VISUAL COMPARISON OF SUBGRADE WITH TESTED SUBGRADE WHEN APPROVED BY A/E, EXCEPT THAT A MINIMUM OF ONE TEST SHALL BE PERFORMED FOR EACH 15,000 SQ.FT. OF BUILDING AREA.
D. TESTING AGENCY WILL TEST COMPACTION OF SOILS IN PLACE ACCORDING TO ASTM D 1556, ASTM D 2167, ASTM D 2922, AND ASTM D 2937, AS APPLICABLE. TESTS WILL BE PERFORMED AT THE FOLLOWING LOCATIONS AND FREQUENCIES:
1. PAVED AND BUILDING SLAB AREAS: AT SUBGRADE AND AT EACH COMPACTED FILL AND BACKFILL LAYER, AT LEAST 1 TEST FOR EVERY 2000 SQ. FT. OR LESS OF PAVED AREA OR BUILDING SLAB, BUT IN NO CASE FEWER THAN 3 TESTS.
2. FOUNDATION WALL BACKFILL: AT EACH COMPACTED BACKFILL LAYER, AT LEAST 1 TEST FOR EACH 100 FEET OR LESS OF WALL LENGTH, BUT NO FEWER THAN 2 TESTS.
3. TRENCH BACKFILL: AT EACH COMPACTED INITIAL AND FINAL BACKFILL LAYER, AT LEAST 1 TEST FOR EACH 150 FEET OR LESS OF TRENCH LENGTH, BUT NO FEWER THAN 2 TESTS.
E. WHEN TESTING AGENCY REPORTS THAT SUBGRADES, FILLS, OR BACKFILLS HAVE NOT ACHIEVED DEGREE OF COMPACTION SPECIFIED, SCARIFY AND MOISTEN OR AERATE, OR REMOVE AND REPLACE SOIL TO DEPTH REQUIRED; RECOMPACT AND RETEST UNTIL SPECIFIED COMPACTION IS OBTAINED.

X. PROTECTION

A. PROTECTING GRADED AREAS: PROTECT NEWLY GRADED AREAS FROM TRAFFIC, FREEZING, AND EROSION. KEEP FREE OF TRASH AND DEBRIS.
B. REPAIR AND REESTABLISH GRADES TO SPECIFIED TOLERANCES WHERE COMPLETED OR PARTIALLY COMPLETED SURFACES BECOME ERODED, RUTTED, SETTLED, OR WHERE THEY LOSE COMPACTION DUE TO SUBSEQUENT CONSTRUCTION OPERATIONS OR WEATHER CONDITIONS.
1. SCARIFY OR REMOVE AND REPLACE SOIL MATERIAL TO DEPTH AS DIRECTED BY ARCHITECT; RESHAPE AND RECOMPACT.
C. WHERE SETTLING OCCURS BEFORE PROJECT CORRECTION PERIOD ELAPSES, REMOVE FINISHED SURFACING, BACKFILL WITH ADDITIONAL SOIL MATERIAL, COMPACT, AND RECONSTRUCT SURFACING.
1. RESTORE APPEARANCE, QUALITY, AND CONDITION OF FINISHED SURFACING TO MATCH ADJACENT WORK, AND ELIMINATE EVIDENCE OF RESTORATION TO GREATEST EXTENT POSSIBLE.

XI. DISPOSAL OF SURPLUS AND WASTE MATERIALS

A. DISPOSAL: TRANSPORT SURPLUS SATISFACTORY SOIL TO DESIGNATED STORAGE AREAS ON OWNER'S PROPERTY. STOCKPILE OR SPREAD SOIL AS DIRECTED BY ARCHITECT.
1. REMOVE WASTE MATERIAL, INCLUDING UNSATISFACTORY SOIL, TRASH, AND DEBRIS, AND LEGALLY DISPOSE OF IT OFF OWNER'S PROPERTY.

SEDIMENT & EROSION CONTROL NOTES

THE CONTRACTOR SHALL IMPLEMENT SOIL EROSION AND SEDIMENT CONTROL MEASURES DURING CONSTRUCTION TO MEET THE STANDARDS AND SPECIFICATIONS OF THE STATE OF OHIO AND COUNTY REGULATIONS AND THEY ARE TO REMAIN IN EFFECT UNTIL AREAS ARE PERMANENTLY STABILIZED.

THE CONTRACTOR SHALL PLACE SEDIMENT BAG FOR EROSION CONTROL ON EXISTING CATCH BASINS AS SHOWN ON THE PLANS.

THE CONTRACTOR SHALL MAKE DAILY INSPECTIONS OF THE SITE TO INSURE EFFECTIVENESS OF EROSION AND SEDIMENTATION CONTROL MEASURES AND WILL IMMEDIATELY MAKE NECESSARY REPAIRS IN ACCORDANCE WITH THE MAINTENANCE SCHEDULE SHOWN ON THIS PLAN.

IT MAY BECOME NECESSARY TO REMOVE PORTIONS OF THE BARRIER DURING CONSTRUCTION TO FACILITATE THE GRADING OPERATIONS IN CERTAIN AREAS. HOWEVER, THE BARRIER SHALL BE IN PLACE IN THE EVENING OR DURING ANY INCLEMENT WEATHER.

ALL CONSTRUCTION TRAFFIC SHALL ENTER AND LEAVE BY THE DESIGNATED ENTRANCE. THE CONTRACTOR SHALL INSTRUCT ALL VEHICLES TO CLEAN SOIL, MISCELLANEOUS DEBRIS, OR OTHER MATERIAL SPILLED, DUMPED OR OTHERWISE DEPOSITED ON PUBLIC STREETS, HIGHWAYS, SIDEWALKS OR OTHER PUBLIC THOROUGHFARES DURING TRANSIT TO AND FROM THE SITE.

EROSION AND ANY SEDIMENTATION FROM THE WORK ON THIS SITE SHALL BE CONTAINED ON THE SITE AND NOT ALLOWED TO COLLECT IN ANY OFF-SITE DRAINAGE COURSE, WHETHER NATURAL OR MAN-MADE.

ALL EARTH CHANGES SHALL BE CONSTRUCTED AND COMPLETED IN SUCH A MANNER TO LIMIT THE EXPOSED AREA OF ANY DISTURBED LAND FOR THE SHORTEST PERIOD OF TIME.

THE CONTRACTOR SHALL INSTRUCT ALL VEHICLES TO CLEAN SOIL, MISCELLANEOUS DEBRIS, OR OTHER MATERIAL SPILLED, DUMPED OR OTHERWISE DEPOSITED ON PUBLIC STREETS, HIGHWAYS, SIDEWALKS OR OTHER PUBLIC THOROUGHFARES DURING TRANSIT TO AND FROM THE SITE.

THE CONTRACTOR SHALL INSTALL TEMPORARY EROSION AND SEDIMENTATION DEVICES AS SHOWN AND REQUIRED BY THESE PLANS. THESE DEVICES SHALL REMAIN IN PLACE AND BE MAINTAINED UNTIL PERMANENT STABILIZATION OF SLOPES, DITCHES AND OTHER EARTH CHANGES HAVE BEEN ACCOMPLISHED.

CATCH BASINS LOCATED IN THE PAVEMENT NEAR THE SITE WILL BE PROTECTED TO PREVENT SEDIMENTATION FROM ENTERING FACILITY. THE COVERS SHALL BE CHECKED PERIODICALLY AND CLEANED WHENEVER THEY FAIL TO FILTER RUNOFF.

THE LIMITS OF SEEDING AND MULCHING ARE AS SHOWN WITHIN THE PLAN SEEDING HAS BEEN ASSUMED TO 5' OUTSIDE THE WORK LIMITS OR RIGHT-OF-WAY WHICHEVER IS GREATER. ALL AREAS NOT DESIGNATED TO BE SEEDED SHALL REMAIN UNDER NATURAL GROUND COVER. THOSE AREAS DISTURBED OUTSIDE THE SEEDING LIMITS SHALL BE SEEDED AND MULCHED AT THE CONTRACTOR'S EXPENSE.

THE CONTRACTOR SHALL MAINTAIN A BUFFER STRIP AS DESIGNATED ON THE PLAN TO PREVENT SEDIMENT FROM LEAVING SITE. THIS STRIP SHALL BE MAINTAINED AT ALL TIMES AND NO SOIL SHALL BE PLACED ON THIS STRIP.

ALL SOIL EROSION AND SEDIMENTATION CONTROL MEASURES SHALL BE INSTALLED PRIOR TO OR IN CONJUNCTION WITH, THE START OF EXCAVATION AND ARE TO REMAIN IN EFFECT UNTIL AREAS ARE STABILIZED. FIELD ADJUSTMENTS WITH RESPECT TO LOCATION AND DIMENSIONS MAY BE MADE BY THE ENGINEER AS REQUIRED.

FILTER BARRIERS CONSIST OF FILTER FABRIC AS SHOWN HEREIN.

SEQUENCE OF CONSTRUCTION SCHEDULE ACTIVITIES

A WORK SCHEDULE THAT COORDINATES THE SEQUENCE OF LAND DISTURBING ACTIVITIES WITH THE INSTALLATION OF EROSION AND SEDIMENTATION CONTROL PRACTICES. THE PURPOSE OF THIS IS TO REDUCE ON-SITE EROSION AND OFF-SITE SEDIMENTATION FROM LAND DISTURBING ACTIVITIES BY INSTALLING EROSION AND SEDIMENTATION CONTROL PRACTICES ACCORDING TO THE OHIO EPA AND COUNTY REGULATIONS.

THE ORDER OF ACTIVITIES WILL BE AS FOLLOWS:
1. INSTALL SILT FENCE, SEDIMENT TRAPS AS PART OF INITIAL PHASE OF ANY WORK TO ENSURE MAXIMUM SILT RETENTION
2. INSTALL TREE PROTECTION FENCE AROUND EXSITNG TREES TO REMAIN AS INDICATED ON PLAN.
3. EXECUTE GRADING AND FILLING OPERATIONS IN ALL YARD AREAS.
4. COMPLETE GRADING AND INSTALL PERMANENT SEEDING AND PLANTINGS
5. REMOVE ACCUMULATED SEDIMENT FROM SEDIMENT AND EROSION CONTROL METHODS (CONTINUAL EVENT)
6. WHEN ALL CONSTRUCTION ACTIVITY IS COMPLETE AND THE SITE IS STABILIZED, REMOVE ALL SEDIMENT (INCLUDING STORM PIPING, STORM CATCH BASINS) AND EROSION CONTROL METHODS AND RESEED ANY AREAS DISTURBED BY THEIR REMOVAL.

MAINTENANCE/INSPECTION PROCEDURES

THESE ARE THE INSPECTION AND MAINTENANCE PRACTICES THAT WILL BE USED TO MAINTAIN EROSION AND SEDIMENT CONTROLS:

ALL CONTROL MEASURES WILL BE INSPECTED AT LEAST ONCE EACH WEEK AND FOLLOWING ANY STORM EVENT OF 0.5 INCHES OR GREATER.

ALL MEASURES WILL BE MAINTAINED IN GOOD WORKING ORDER; IF REPAIR IS NECESSARY, IT WILL BE INITIATED WITHIN 24 HOURS OF REPORT.

BUILT UP SEDIMENT WILL BE REMOVED FROM SILT FENCE WHEN IT HAS REACHED ONE-THIRD THE HEIGHT OF THE FENCE.

SILT FENCE WILL BE INSPECTED FOR DEPTH OF SEDIMENT, TEARS, TO SEE IF THE FABRIC IS SECURELY ATTACHED TO THE FENCE POSTS, AND TO SEE THAT THE FENCE POSTS ARE FIRMLY IN THE GROUND.

BUILT UP SEDIMENT IN THE DRAINAGE SWALES WILL BE REMOVED.

TEMPORARY AND PERMANENT SEEDING AND PLANTING WILL BE INSPECTED FOR BARE SPOTS, WASHOUTS, AND HEALTHY GROWTH.

A MAINTENANCE INSPECTION REPORT WILL BE MADE AFTER EACH INSPECTION. A COPY OF THE REPORT FORM TO BE COMPLETED BY THE INSPECTOR IS ATTACHED.

THE CONTRACTOR WILL BE RESPONSIBLE FOR THE INSPECTIONS, SUCH REPAIRS AND FILLING OUT THE INSPECTION AND MAINTENANCE REPORT.

SILT FENCE NOTES

1. SILT FENCE SHALL BE CONSTRUCTED BEFORE UPSLOPE LAND DISTURBANCE BEGINS.
2. ALL SILT FENCE SHALL BE PLACED AS CLOSE TO THE CONTOUR AS POSSIBLE SO THAT WATER WILL NOT CONCENTRATE AT LOW POINTS IN THE FENCE AND SO THAT SMALL SWALES OR DEPRESSIONS THAT MAY CARRY SMALL CONCENTRATED FLOWS TO THE SILT FENCE ARE DISSIPATED ALONG ITS LENGTH.
3. ENDS OF THE SILT FENCES SHALL BE BROUGHT UPSLOPE SLIGHTLY SO THAT WATER PONDED BY THE SILT FENCE WILL BE PREVENTED FROM FLOWING AROUND THE ENDS.
4. SILT FENCE SHALL BE PLACED ON THE FLATTEST AREA AVAILABLE.
5. WHERE POSSIBLE, VEGETATION SHALL BE PRESERVED FOR 5 FEET (OR AS MUCH AS POSSIBLE) UPSLOPE FROM THE SILT FENCE. IF VEGETATION IS REMOVED, IT SHALL BE REESTABLISHED WITHIN 7 DAYS FROM THE INSTALLATION OF THE SILT FENCE.
6. THE HEIGHT OF THE SILT FENCE SHALL BE A MINIMUM OF 16 INCHES ABOVE THE ORIGINAL GROUND SURFACE.
7. THE SILT FENCE SHALL BE PLACED IN AN EXCAVATED OR SLICED TRENCH CUT A MINIMUM OF 6 INCHES DEEP. THE TRENCH SHALL BE MADE WITH A TRENCHER, CABLE LAYING MACHINE, SLICING MACHINE, OR OTHER SUITABLE DEVICE THAT WILL ENSURE AN ADEQUATELY UNIFORM DEPTH.
8. THE SILT FENCE SHALL BE PLACED WITH THE STAKES ON THE DOWNSLOPE SIDE OF THE GEOTEXTILE. A MINIMUM OF 8 INCHES OF GEOTEXTILE MUST BE BELOW THE GROUND SURFACE. EXCESS MATERIAL SHALL LAY ON THE BOTTOM OF THE 6-INCH DEEP TRENCH. THE TRENCH SHALL BE BACKFILLED AND COMPACTED ON BOTH SIDES OF THE FABRIC.
9. SEAMS BETWEEN SECTIONS OF SILT FENCE SHALL BE SPLICED TOGETHER ONLY AT A SUPPORT POST WITH A MINIMUM 6-IN. OVERLAP PRIOR TO DRIVING INTO THE GROUND, (SEE DETAILS).
10. MAINTENANCE – SILT FENCE SHALL ALLOW RUNOFF TO PASS ONLY AS DIFFUSE FLOW THROUGH THE GEOTEXTILE. IF RUNOFF OVERTOPS THE SILT FENCE, FLOWS UNDER THE FABRIC OR AROUND THE FENCE ENDS, OR IN ANY OTHER WAY ALLOWS A CONCENTRATED FLOW DISCHARGE, ONE OF THE FOLLOWING SHALL BE PERFORMED, AS APPROPRIATE: 1) THE LAYOUT OF THE SILT FENCE SHALL BE CHANGED, 2) ACCUMULATED SEDIMENT SHALL BE REMOVED, OR 3) OTHER PRACTICES SHALL BE INSTALLED.
11. SEDIMENT DEPOSITS SHALL BE ROUTINELY REMOVED WHEN THE DEPOSIT REACHES APPROXIMATELY ONE-HALF OF THE HEIGHT OF THE SILT FENCE.
12. SILT FENCES SHALL BE INSPECTED AFTER EACH RAINFALL AND AT LEAST DAILY DURING A PROLONGED RAINFALL. THE LOCATION OF EXISTING SILT FENCE SHALL BE REVIEWED DAILY TO ENSURE ITS PROPER LOCATION AND EFFECTIVENESS. IF DAMAGED, THE SILT FENCE SHALL BE REPAIRED IMMEDIATELY.

CRITERIA FOR SILT FENCE MATERIALS

1. FENCE POST – THE LENGTH SHALL BE A MINIMUM OF 32 INCHES. WOOD POSTS WILL BE 2-BY-2-IN. NOMINAL DIMENSIONED HARDWOOD OF SOUND QUALITY. THEY SHALL BE FREE OF KNOTS, SPLITS AND OTHER VISIBLE IMPERFECTIONS, THAT WILL WEAKEN THE POSTS. THE MAXIMUM SPACING BETWEEN POSTS SHALL BE 10 FT. POSTS SHALL BE DRIVEN A MINIMUM 16 INCHES INTO THE GROUND, WHERE POSSIBLE. IF NOT POSSIBLE, THE POSTS SHALL BE ADEQUATELY SECURED TO PREVENT OVERTURNING OF THE FENCE DUE TO SEDIMENT/WATER LOADING.
2. SILT FENCE FABRIC – SEE CHART BELOW.

SEDIMENT & EROSION CONTROL CRITERIA

IN ORDER TO CONTROL SEDIMENT POLLUTION OF WATER RESOURCES THE OWNER OR PERSON RESPONSIBLE FOR THE DEVELOPMENT AREA SHALL USE CONSERVATION PLANNING AND PRACTICES TO MAINTAIN THE LEVEL OF CONSERVATION ESTABLISHED BY THE FOLLOWING STANDARDS:

THING OF SEDIMENT-TAPPING PRACTICES. SEDIMENT CONTROL PRACTICES SHALL BE FUNCTIONAL THROUGHOUT EARTH-DISTURBING ACTIVITY.

STABILIZATION OF STRIPPED AREA. STRIPPED AREAS SHALL HAVE SOIL STABILIZATION APPLIED WITHIN SEVEN DAYS IF THEY ARE TO REMAIN DORMANT FOR MORE THAN TWENTY-ONE DAYS. PERMANENT OR TEMPORARY SOIL STABILIZATION SHALL BE APPLIED TO DENUDED AREAS WITHIN SEVEN DAYS AFTER FINAL GRADE IS REACHED ON ANY PORTION OF THE SITE, AND SHALL ALSO BE APPLIED WITHIN SEVEN DAYS TO DENUDED AREAS WHICH MAY NOT BE AT FINAL GRADE, BUT WILL REMAIN DORMANT (UNDISTURBED) FOR LONGER THAN FORTY-FIVE DAYS.

STORM SEWER INLET PROTECTION. ALL STORM SEWER INLETS WHICH ACCEPT WATER RUNOFF FROM THE DEVELOPMENT AREA SHALL BE PROTECTED SO THAT SEDIMENT-LADEN WATER WILL NOT ENTER THE STORM SEWER SYSTEM WITHOUT FIRST BEING FILTERED.

CONSTRUCTION ACCESS ROUTES. MEASURES SHALL BE TAKEN TO PREVENT SOIL TRANSPORT ONTO SURFACES WHERE RUNOFF IS NOT CHECKED BY SEDIMENT CONTROLS, OR ONTO PUBLIC ROADS.

SLOUGHING AND DUMPING:
A. NO SOIL, ROCK, DEBRIS, OR ANY OTHER MATERIAL SHALL BE DUMPED OR PLACED INTO A WATER RESOURCE OR INTO SUCH PROXIMITY THAT IT MAY READILY SLOUGH, SLIP, OR ERODE INTO A WATER RESOURCE UNLESS SUCH DUMPING OR PLACING IS AUTHORIZED BY THE CITY ENGINEER AND, WHEN APPLICABLE, THE U.S. ARMY CORPS OF ENGINEERS, FOR SUCH PURPOSES AS, BUT NOT LIMITED TO CONSTRUCTION BRIDGES, CULVERTS, AND EROSION CONTROL STRUCTURES.

B. UNSTABLE SOILS PRONE TO SLIPPING OR LANDSLIDING SHALL NOT BE GRADED, EXCAVATED, FILLED OR HAVE LOADS IMPOSED UPON THEM UNLESS THE WORK IS DONE IN ACCORDANCE WITH A QUALIFIED PROFESSIONAL ENGINEER'S RECOMMENDATIONS TO CORRECT, ELIMINATE, OR ADEQUATELY ADDRESS THE PROBLEMS.

CUT AND FILL SLOPES. CUT AND FILL SLOPES SHALL BE CONSTRUCTED IN A MANNER WHICH WILL MINIMIZE EROSION. CONSIDERATION SHALL BE GIVEN TO THE LENGTH AND STEEPNESS OF THE SLOPE, SOIL TYPE, UPSLOPE DRAINAGE AREA, GROUNDWATER CONDITIONS, AND SLOPE STABILIZATION.

ESTABLISHMENT OF PERMANENT VEGETATION. PERMANENT VEGETATION SHALL NOT BE CONSIDERED ESTABLISHED UNTIL GROUND COVER IS ACHIEVED WHICH, IN THE OPINION OF THE APPROVING AGENCY, PROVIDES ADEQUATE COVER AND IS MATURE ENOUGH TO CONTROL SOIL EROSION SATISFACTORILY AND TO SURVIVE ADVERSE WEATHER CONDITIONS.

DISPOSITION OF TEMPORARY PRACTICES. ALL TEMPORARY EROSION AND SEDIMENT CONTROL PRACTICES SHALL BE DISPOSED OF WITHIN THIRTY DAYS AFTER FINAL SITE STABILIZATION IS ACHIEVED OR AFTER THE TEMPORARY PRACTICES ARE NO LONGER NEEDED, UNLESS OTHERWISE AUTHORIZED BY THE APPROVING AGENCY. TRAPPED SEDIMENT SHALL BE PERMANENTLY STABILIZED TO PREVENT FURTHER EROSION.

MAINTENANCE. ALL TEMPORARY AND PERMANENT EROSION AND SEDIMENT CONTROL PRACTICES SHALL BE DESIGNED AND CONSTRUCTED TO MINIMIZE MAINTENANCE REQUIREMENTS. THEY SHALL BE MAINTAINED AND REPAIRED AS NEEDED TO ASSURE CONTINUED PERFORMANCE OF THEIR INTENDED FUNCTION. THE PERSON OR ENTITY RESPONSIBLE FOR THE CONTINUED MAINTENANCE OF PERMANENT EROSION CONTROLS SHALL BE IDENTIFIED TO THE SATISFACTION OF THE PLAN-APPROVING AUTHORITY AND IDENTIFIED BY THE SUBDIVIDER'S AGREEMENT.

THE COST FOR TEMPORARY CHANNELS, SEDIMENT DAMS AND OTHER APPURTENANT EARTH MOVING OPERATIONS SHALL BE INCLUDED IN THE PRICE BID FOR EARTHWORK.

OHIO EPA CONSTRUCTION SITE INSPECTION CHECKLIST

BY MAKING USE OF SOME SIMPLE BEST MANAGEMENT PRACTICES (BMP'S) A DEVELOPER CAN DO HIS OR HER SHARE TO PROTECT OHIO'S WATER RESOURCES FROM THE HARMFUL EFFECTS OF SEDIMENT. THE TOPOGRAPHY OF THE SITE AND THE EXTENT OF THE CONSTRUCTION ACTIVITIES WILL DETERMINE WHICH OF THESE PRACTICES ARE APPLICABLE TO ANY GIVEN SITE, BUT THE BMPS LISTED HERE ARE APPLICABLE TO MOST CONSTRUCTION SITES. FOR DETAILS ON THE INSTALLATION AND MAINTENANCE OF THESE BMPS LISTED HERE ARE APPLICABLE TO MOST CONSTRUCTION SITES. FOR DETAILS ON THE INSTALLATION AND MAINTENANCE OF THESE BMPS, PLEASE REFER TO RAINWATER AND LAND DEVELOPMENT, *OHIO'S STANDARDS FOR STORM WATER MANAGEMENT, LAND DEVELOPMENT AND URBAN STREAM PROTECTION* (OHIO DEPARTMENT OF NATURAL RESOURCES, 1996), AVAILABLE FROM YOUR COUNTY SOIL AND WATER CONSERVATION DISTRICT (SWCD).

TEMPORARY STABILIZATION:
THIS IS THE MOST EFFECTIVE BMP. ALL DISTURBED AREAS THAT WILL LIE DORMANT FOR OVER 21 DAYS MUST BE STABILIZED WITHIN 7 DAYS OF THE DATE THE AREA BECOMES INACTIVE. THE GOAL OF TEMPORARY STABILIZATION IS TO PROVIDE COVER, QUICKLY. TO MINIMIZE YOUR COSTS OF TEMPORARY STABILIZATION, LEAVE NATURAL COVER IN PLACE FOR AS LONG AS POSSIBLE. ONLY DISTURB AREAS YOU INTEND TO WORK WITHIN THE NEXT 21 DAYS.

CONSTRUCTION ENTRANCES:
CONSTRUCTION ENTRANCES ARE INSTALLED TO MINIMIZE OFF-SITE TRACKING OF SEDIMENTS.

SILT FENCE:
THIS IS TYPICALLY USED AT THE PERIMETER OF A DISTURBED AREA. IT'S ONLY FOR SMALL DRAINAGE AREAS ON RELATIVELY FLAT SLOPES OR AROUND SMALL SOIL STORAGE PILES. NOT SUITABLE WHERE RUNOFF IS CONCENTRATED IN A DITCH, PIPE OR THROUGH STREAMS. SILT FENCE MUST BE INSTALLED WITHIN 7 DAYS OF FIRST GRUBBING THE AREA IT CONTROLS.

INLET PROTECTION:
THESE MUST BE INSTALLED ON ALL YARD DRAINS AND CURB DRAINS WHEN THESE INLETS DO NOT DRAIN TO A SEDIMENT TRAP OR BASIN. BEST USED ON ROADS WITH LITTLE OR NO TRAFFIC. IF WORKING PROPERLY, INLET PROTECTION WILL CAUSE WATER TO POND. IF USED ON CURB INLETS, STREETS WILL FLOOD TEMPORARILY DURING HEAVY STORMS. CHECK WITH YOUR MUNICIPALITY BEFORE INSTALLING CURB INLET PROTECTION. THEY MAY PREFER AN ALTERNATE MEANS OF SEDIMENT CONTROL SUCH AS SILT FENCE.

PERMANENT STABILIZATION:
ALL AREAS AT FINAL GRADE MUST BE PERMANENTLY STABILIZED WITHIN 7 DAYS OF REACHING FINAL GRADE. THIS IS USUALLY ACCOMPLISHED BY USING SEED AND MULCH, BUT SPECIAL MEASURES ARE SOMETIMES REQUIRED. THIS IS PARTICULARLY TRUE IN DRAINAGE DITCHES OR ON STEEP SLOPES. THESE MEASURES INCLUDE THE ADDITION OF TOPSOIL, EROSION CONTROL MATTING, ROCK RIP-RAP OR RETAINING WALLS. PERMANENT SEEDING SHOULD BE DONE MARCH 1 TO MAY 31 AND AUGUST 1 TO SEPTEMBER 30. DORMANT SEEDING CAN BE DONE FROM NOVEMBER 20 TO MARCH 15.

NON-SEDIMENT POLLUTION CONTROL:
ALTHOUGH SEDIMENT IS THE POLLUTANT OF GREATEST CONCERN ON MOST CONSTRUCTION SITES, THERE ARE OTHER SOURCES OF POLLUTION. MOST OF THESE BMPS ARE EASY TO IMPLEMENT WITH A LITTLE BIT OF PLANNING AND GO A LONG WAY TOWARD KEEPING YOUR SITE CLEAN AND ORGANIZED. PLEASE BE SURE TO INFORM ALL CONTRACTORS HOW THESE BMPS AFFECT THEIR OPERATIONS ON THE SITE, PARTICULARLY THOSE THAT WILL BE WORKING NEAR A STREAM.

MAINTENANCE

SILT FENCES AND BARRIERS SHALL BE INSPECTED IMMEDIATELY AFTER EACH RAINFALL AND AT LEAST DAILY DURING PROLONGED RAINFALL ANY REQUIRED REPAIRS SHALL BE MADE IMMEDIATELY.

SHOULD THE FABRIC ON A SILT FENCE OR FILTER BARRIER DECOMPOSE OR BECOME INEFFECTIVE PRIOR TO THE END OF THE EXPECTED USABLE LIFE AND THE BARRIER IS STILL NECESSARY, THE FABRIC SHALL BE REPLACED PROMPTLY.

SEDIMENT DEPOSITS SHALL BE REMOVED AFTER EACH STORM EVENT. THEY MUST BE REMOVED WHEN DEPOSITS REACH APPROXIMATELY ONE-THIRD THE HEIGHT OF THE BARRIER.

ANY SEDIMENT DEPOSITS REMAINING IN PLACE AFTER THE SILT FENCE OR FILTER BARRIER IS NO LONGER REQUIRED SHALL BE DRESSED TO CONFORM WITH THE EXISTING GRADE PREPARED AND SEEDED.

SILT FENCE DETAIL

NO SCALE

TO BE USED IN CATCH BASINS

SECTION A/.

NO SCALE

INSTALLATION: STAND GRATE ON END, PLACE CASTING IN BAG, OVER GRATE, FLIP GRATE OVER SO THAT OPEN END IS UP, PULL UP SLACK, TUCK FLAP IN. BE SURE END OF GRATE IS COMPLETELY COVERED BY FLAP OR BAG WILL NOT FIT PROPERLY. HOLDING HANDLES, CAREFULLY PLACE THE BAG WITH GRATE INSERTED INTO CATCH BASIN FRAME. NO CASTING SHALL BE WRAPPED WITH LOOSE GEOSYNTHETIC MATERIAL, ONLY A BAG TYPE SYSTEM IS ACCEPTABLE.

MAINTENANCE: AFTER SILT HAS DRIED, REMOVE IT FROM THE SURFACE OF THE BAG WITH BROOM.

COPYRIGHT 2013 BY FANNING/HOWEY ASSOCIATES, INC.

STATE OF OHIO
RANDAL L. VANTILBURG
#69676
REGISTERED PROFESSIONAL ENGINEER

FLEET MAINTENANCE FACILITY
EXPANSION
CITY OF DUBLIN, OHIO

FANNING HOWEY
614.764.4661 www.fhai.com

EARTHWORK SPECIFICATIONS AND EROSION CONTROL NOTES AND DETAILS

DRAWN BY: MDL
CHECKED BY: RVT
COMM. NO.: 213052.00
DATE: JUly 31, 2013

REVISIONS NO.	DATE	
#1	08/30/2013	ZONING
#2	11/04/2013	REBID

G2.2

MAINTENANCE FACILITY EXPANSION
213052.00

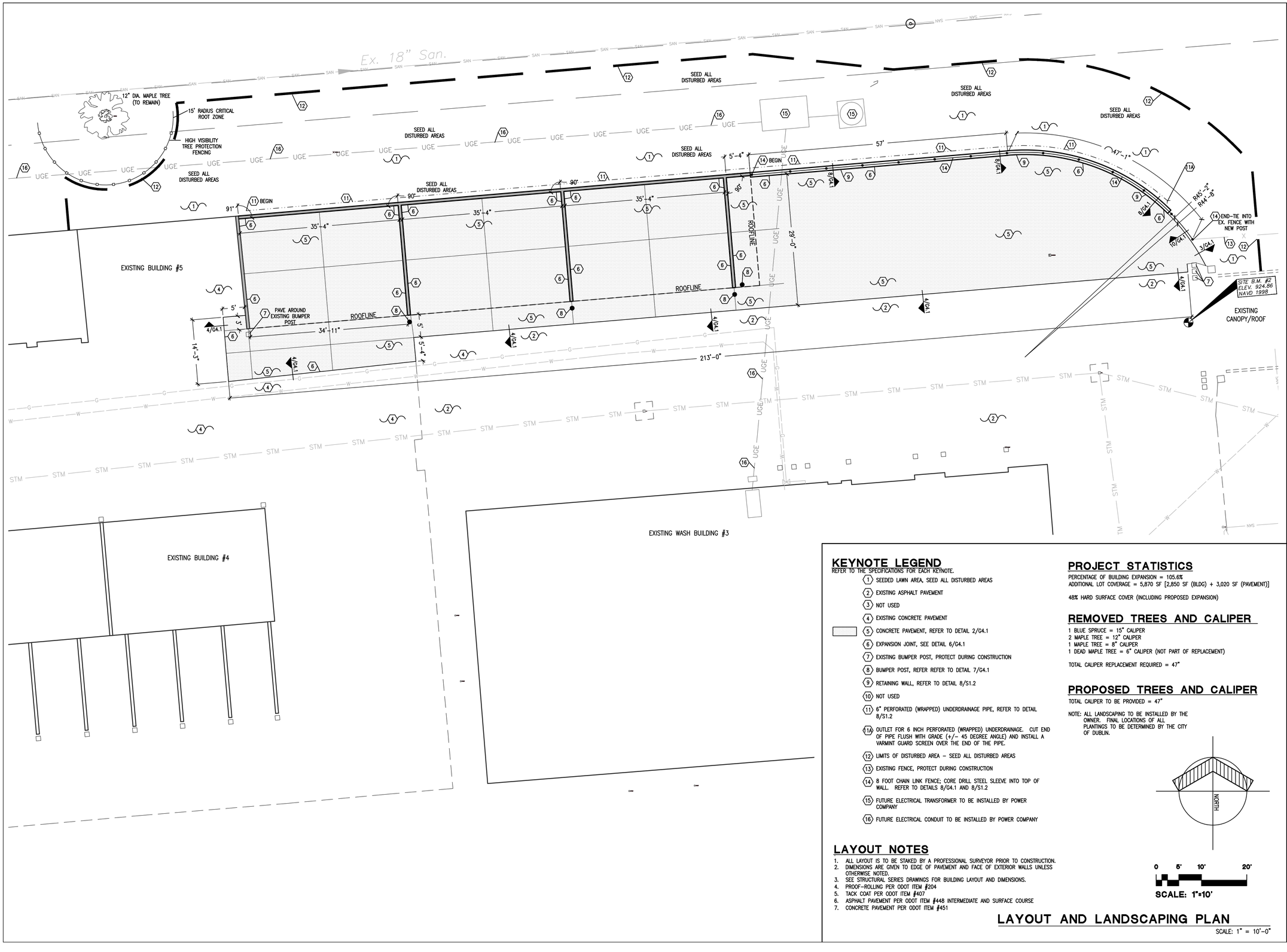

KEYNOTE LEGEND

REFER TO THE SPECIFICATIONS FOR EACH KEYNOTE.

1. SEEDED LAWN AREA, SEED ALL DISTURBED AREAS
2. EXISTING ASPHALT PAVEMENT
3. NOT USED
4. EXISTING CONCRETE PAVEMENT
5. CONCRETE PAVEMENT, REFER TO DETAIL 2/G4.1
6. EXPANSION JOINT, SEE DETAIL 6/G4.1
7. EXISTING BUMPER POST, PROTECT DURING CONSTRUCTION
8. BUMPER POST, REFER REFER TO DETAIL 7/G4.1
9. RETAINING WALL, REFER TO DETAIL 8/S1.2
10. NOT USED
11. 6" PERFORATED (WRAPPED) UNDERDRAINAGE PIPE, REFER TO DETAIL 8/S1.2
- 11A. OUTLET FOR 6 INCH PERFORATED (WRAPPED) UNDERDRAINAGE. CUT END OF PIPE FLUSH WITH GRADE (+/- 45 DEGREE ANGLE) AND INSTALL A VARMINT GUARD SCREEN OVER THE END OF THE PIPE.
12. LIMITS OF DISTURBED AREA – SEED ALL DISTURBED AREAS
13. EXISTING FENCE, PROTECT DURING CONSTRUCTION
14. 8 FOOT CHAIN LINK FENCE; CORE DRILL STEEL SLEEVE INTO TOP OF WALL. REFER TO DETAILS 8/G4.1 AND 8/S1.2
15. FUTURE ELECTRICAL TRANSFORMER TO BE INSTALLED BY POWER COMPANY
16. FUTURE ELECTRICAL CONDUIT TO BE INSTALLED BY POWER COMPANY

LAYOUT NOTES

1. ALL LAYOUT IS TO BE STAKED BY A PROFESSIONAL SURVEYOR PRIOR TO CONSTRUCTION.
2. DIMENSIONS ARE GIVEN TO EDGE OF PAVEMENT AND FACE OF EXTERIOR WALLS UNLESS OTHERWISE NOTED.
3. SEE STRUCTURAL SERIES DRAWINGS FOR BUILDING LAYOUT AND DIMENSIONS.
4. PROOF-ROLLING PER ODOT ITEM #204
5. TACK COAT PER ODOT ITEM #407
6. ASPHALT PAVEMENT PER ODOT ITEM #448 INTERMEDIATE AND SURFACE COURSE
7. CONCRETE PAVEMENT PER ODOT ITEM #451

PROJECT STATISTICS

PERCENTAGE OF BUILDING EXPANSION = 105.6%
ADDITIONAL LOT COVERAGE = 5,870 SF [2,850 SF (BLDG) + 3,020 SF (PAVEMENT)]

48% HARD SURFACE COVER (INCLUDING PROPOSED EXPANSION)

REMOVED TREES AND CALIPER

1 BLUE SPRUCE = 15" CALIPER
2 MAPLE TREE = 12" CALIPER
1 MAPLE TREE = 8" CALIPER
1 DEAD MAPLE TREE = 6" CALIPER (NOT PART OF REPLACEMENT)

TOTAL CALIPER REPLACEMENT REQUIRED = 47"

PROPOSED TREES AND CALIPER

TOTAL CALIPER TO BE PROVIDED = 47"

NOTE: ALL LANDSCAPING TO BE INSTALLED BY THE OWNER. FINAL LOCATIONS OF ALL PLANTINGS TO BE DETERMINED BY THE CITY OF DUBLIN.

NORTH

0 5' 10' 20'

SCALE: 1"=10'

LAYOUT AND LANDSCAPING PLAN

SCALE: 1" = 10'-0"

COPYRIGHT 2013 BY FANNING/HOWEY ASSOCIATES, INC.

STATE OF OHIO · RANDAL L VANTILBURG · #69676 · REGISTERED · PROFESSIONAL · ENGINEER

FLEET MAINTENANCE FACILITY EXPANSION
CITY OF DUBLIN, OHIO

FANNING/HOWEY
614.764.4661
www.fhai.com

LAYOUT PLAN

DRAWN BY: MDL
CHECKED BY: RVT

COMM. NO.: 213052.00
DATE: July 31, 2013

REVISIONS NO.	DATE
#1	08/30/2013 ZONING
#2	11/04/2013 REBID

G3.1

MAINTENANCE FACILITY EXPANSION
213052.00

1 NOT USED

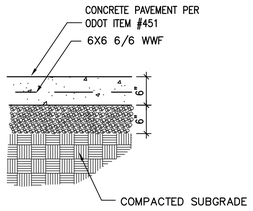

2 CONCRETE PAVEMENT

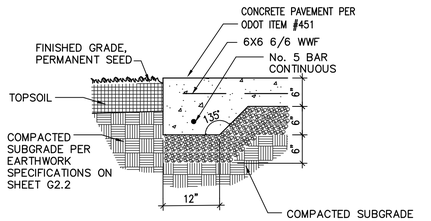

3 CONCRETE PAVEMENT AT GRADE

SCALE: NOT TO SCALE

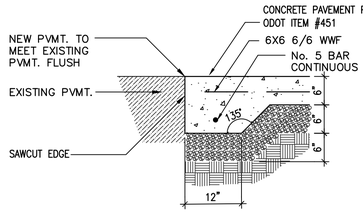

4 CONCRETE PVMT. AT EXISTING PVMT.

SCALE: NOT TO SCALE

5 NOT USED

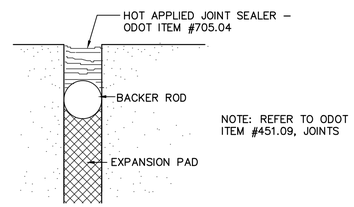

6 EXPANSION JOINT

FULL SCALE

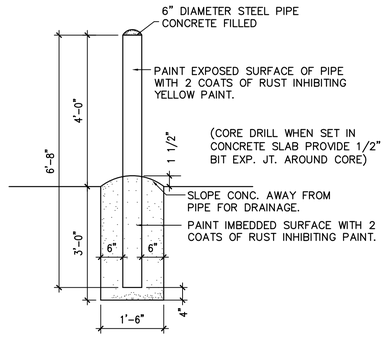

7 6" BUMPER POST

SCALE: NOT TO SCALE

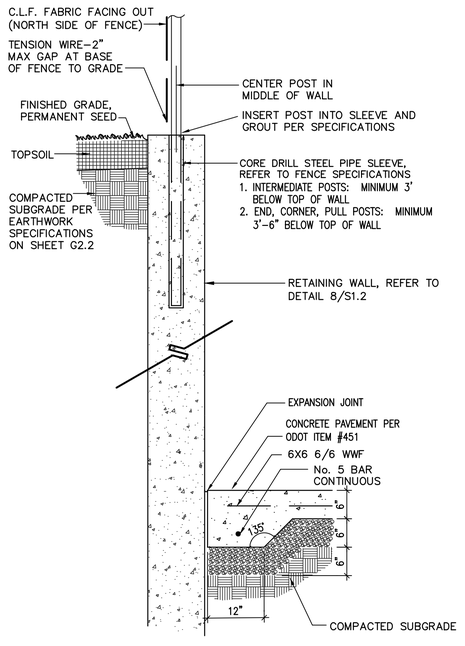

8 CONCRETE PVMT. AT RETAINING WALL/FENCE

SCALE: NOT TO SCALE

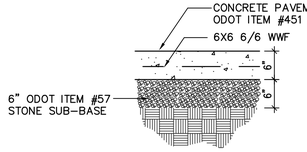

9 CONCRETE PAVEMENT SECTION

SCALE: NOT TO SCALE

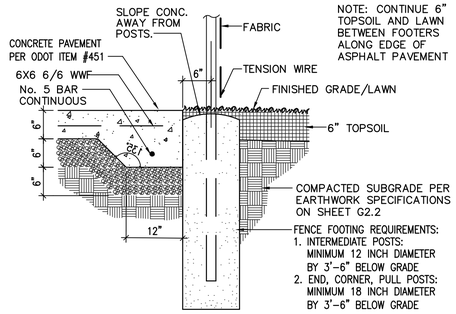

10 FENCE AT CONCRETE PVMT./GRADE

SCALE: NOT TO SCALE

FENCE SPECIFICATIONS

I. PERFORMANCE REQUIREMENTS

A. DELEGATED DESIGN: DESIGN CHAIN–LINK FENCES AND GATES, INCLUDING COMPREHENSIVE ENGINEERING ANALYSIS BY A QUALIFIED PROFESSIONAL ENGINEER, USING PERFORMANCE REQUIREMENTS AND DESIGN CRITERIA INDICATED.

B. STRUCTURAL PERFORMANCE: PROVIDE CHAIN–LINK FENCES AND GATES CAPABLE OF WITHSTANDING THE EFFECTS OF GRAVITY LOADS AND THE FOLLOWING LOADS AND STRESSES WITHIN LIMITS AND UNDER CONDITIONS INDICATED:
1. MINIMUM POST SIZE AND MAXIMUM SPACING FOR WIND VELOCITY PRESSURE: DETERMINE BASED ON MESH SIZE AND PATTERN SPECIFIED, AND ON THE FOLLOWING MINIMUM DESIGN WIND PRESSURES AND ACCORDING TO CHAIN LINK FENCE MANUFACTURERS INSTITUTE (CLFMI): WLG2445, CHAIN LINK FENCE WIND LOAD GUIDE FOR SELECTION OF LINE POST AND LINE POST SPACING:
   a. WIND SPEED: 90 MPH.
   b. WIND EXPOSURE CATEGORY: B.

II. CHAIN–LINK FENCE FABRIC

A. GENERAL: HEIGHT INDICATED ON DRAWINGS. PROVIDE FABRIC IN ONE–PIECE HEIGHTS MEASURED BETWEEN TOP AND BOTTOM OF OUTER EDGE OF SELVAGE KNUCKLE OR TWIST. COMPLY WITH CLFMI PRODUCT MANUAL, ASTM A 392, CLFMI CLF 2445, AND REQUIREMENTS INDICATED BELOW:
1. STEEL WIRE FABRIC AND MESH SIZE: 2 INCH MESH, METALLIC–COATED WIRE WITH A DIAMETER OF 0.148 INCH
   a. WEIGHT OF ALUMINUM COATING: ASTM A 491, TYPE I, 0.4 OZ./SQ. FT..
   b. COAT SELVAGE ENDS OF FABRIC THAT IS METALLIC COATED BEFORE THE WEAVING PROCESS WITH MANUFACTURER'S STANDARD CLEAR PROTECTIVE COATING.
2. SELVAGE: TWISTED TOP AND BOTTOM.

III. INDUSTRIAL FENCE FRAMING

A. POSTS AND RAILS: COMPLY WITH ASTM F 1043 FOR FRAMING, ASTM F 1083 FOR GROUP IC ROUND PIPE AND THE FOLLOWING:
1. GROUP: PROVIDE EITHER IA, ROUND STEEL PIPE, SCHEDULE 40 OR IC, ROUND STEEL PIPE, YIELD STRENGTH 50,000 PSI.
2. FENCE HEIGHT: AS INDICATED.
3. POST SIZE AND THICKNESS: ACCORDING TO ASTM F 1043.
   a. INTERMEDIATE POSTS
      1) FABRIC 10 FEET AND UNDER:
         a) IA: 2.375 INCH O.D. WITH .154–INCH WALL THICKNESS, 3.65 LBS. PER FOOT.
         b) IC: 2.375 INCH O.D. WITH .130–INCH WALL THICKNESS, 3.12 LBS. PER FOOT.
   b. END, CORNER, AND PULL POSTS
      1) GENERAL
         a) END POST WILL BE USED TO REFER TO TERMINAL POSTS.
         b) CORNER POST WILL BE INSTALLED WHERE ALL CHANGES IN DIRECTION OCCUR IN THE FENCE LINE OF 30 DEGREES OR MORE.
         c) PULL POST SHALL BE INSTALLED AT ALL ABRUPT CHANGES IN GRADE OR AT LOCATIONS DIRECTED BY THE ARCHITECT WITH A MAXIMUM SPACING BETWEEN PULL POSTS NOT TO EXCEED 500 FEET.
      2) FABRIC 10 FEET AND UNDER
         a) IA: 2.875 INCH O.D., WITH .203–INCH WALL THICKNESS, 5.79 LBS. PER FOOT.
         b) IC: 2.875 INCH O.D., WITH .160–INCH WALL THICKNESS, 4.64 LBS. PER FOOT.
4. COATING FOR STEEL FRAMING:
   a. METALLIC COATING, UNLESS OTHERWISE NOTED.
      1) IA: TYPE B, ZINC WITH ORGANIC OVERCOAT, CONSISTING OF A MINIMUM OF 0.9 OZ./SQ.FT. OF ZINC AFTER WELDING, A CHROMATE CONVERSION COATING, AND A CLEAR, VERIFIABLE POLYMER FILM.
      2) IC: TYPE C, ZN–5–A1–MM ALLOY, CONSISTING OF NOT LESS THAN 1.8 OZ./SQ.FT. COATING.
5. POSTS SHALL HAVE SUFFICIENT LENGTH TO MEET THE FOLLOWING EMBEDMENT REQUIREMENTS:
   a. INTERMEDIATE POSTS: 36 INCHES INTO CONCRETE.
   b. END, CORNER, AND PULL POSTS: 48 INCHES INTO CONCRETE.

B. POST BRACE RAILS: MATCH TOP RAIL FOR COATING AND STRENGTH AND STIFFNESS REQUIREMENTS. PROVIDE BRACE RAIL WITH TRUSS ROD ASSEMBLY FOR EACH END, AND PULL POST. PROVIDE TWO BRACE RAILS EXTENDING IN OPPOSING DIRECTIONS, EACH WITH TRUSS ROD ASSEMBLY, FOR EACH CORNER POST AND FOR PULL POSTS. PROVIDE RAIL ENDS AND CLAMPS FOR ATTACHING RAILS TO POSTS.

C. TOP RAILS: FABRICATE TOP RAIL FROM LENGTHS 21 FEET OR LONGER, WITH SWEDGED–END OR FABRICATED FOR EXPANSION–TYPE COUPLING, FORMING A CONTINUOUS RAIL ALONG TOP OF CHAIN–LINK FABRIC.
1. THE TOP RAIL SHALL BE 1.660 INCHES O.D. PIPE, PROVIDED IN LENGTHS NOT LESS THAN 18 FEET, AND FITTED WITH COUPLINGS FOR CONNECTING THE LENGTHS INTO A CONTINUOUS RUN.
   a. IA: .140–INCH WALL THICKNESS, 2.27 LBS. PER LINEAL FOOT.
   b. IC: .111–INCH WALL THICKNESS, 1.836 LBS. PER LINEAL FOOT.
2. COUPLINGS: TOP RAIL COUPLINGS SHALL BE A MINIMUM OF 6 INCHES LONG AND AT 21 FEET MAXIMUM INTERVALS, PROVIDING A SUBSTANTIAL CONNECTION AND ALLOWING FOR EXPANSION AND CONNECTION OF THE RAIL.
3. THE TOP RAIL SHALL PASS THROUGH THE LINE POST TOPS AND FORM A CONTINUOUS BRACE FROM END TO END OF EACH STRETCH OF FENCE.
4. THE TOP RAIL SHALL SECURELY FASTEN TO THE TERMINAL POSTS BY HEAVY PRESSED STEEL BRACE BANDS AND MALLEABLE RAIL END CONNECTIONS.

D. INTERMEDIATE RAILS: NOT REQUIRED.

E. BOTTOM RAILS: NOT REQUIRED.

F. DELETED

IV. TENSION WIRE

A. GENERAL: PROVIDE HORIZONTAL TENSION WIRE AT THE FOLLOWING LOCATIONS:
1. LOCATION: EXTENDED ALONG BOTTOM OF FENCE FABRIC, UNLESS OTHERWISE NOTED.

B. METALLIC–COATED STEEL WIRE: 0.177 INCH DIAMETER, MARCELLED TENSION WIRE COMPLYING WITH ASTM A 817/A 824 AND THE FOLLOWING:
1. COATING: TYPE I, ALUMINUM COATED (ALUMINIZED)
   a. CLASS 2: NOT LESS THAN 1.2 OZ./SQ.FT. OF UNCOATED WIRE SURFACE.

V. FITTINGS

A. GENERAL: PROVIDE FITTINGS FOR A COMPLETE FENCE INSTALLATION, INCLUDING SPECIAL FITTINGS FOR CORNERS. COMPLY WITH ASTM F 626.

B. POST AND LINE CAPS: HOT–DIP GALVANIZED PRESSED STEEL OR HOT–DIP GALVANIZED CAST IRON. PROVIDE WEATHERTIGHT CLOSURE CAP FOR EACH POST.
1. PROVIDE LINE POST CAPS WITH LOOP TO RECEIVE TOP RAIL.

C. RAIL AND BRACE ENDS: HOT–DIP GALVANIZED PRESSED STEEL OR HOT–DIP GALVANIZED CAST IRON. PROVIDE RAIL ENDS OR OTHER MEANS FOR ATTACHING RAILS SECURELY TO EACH GATE, CORNER, PULL, AND END POST.

D. RAIL FITTINGS: PROVIDE THE FOLLOWING:
1. TOP RAIL SLEEVES: HOT–DIP GALVANIZED PRESSED STEEL OR ROUND STEEL TUBING. NOT LESS THAN 6 INCHES LONG.
2. RAIL CLAMPS: HOT–DIP GALVANIZED PRESSED STEEL. PROVIDE LINE AND CORNER BOULEVARD CLAMPS FOR CONNECTING INTERMEDIATE RAILS IN THE FENCE LINE TO LINE POSTS.

E. TENSION AND BRACE BANDS: HOT–DIP GALVANIZED PRESSED STEEL.

F. TENSION BARS: HOT–DIP GALVANIZED STEEL, LENGTH NOT LESS THAN 2 INCHES SHORTER THAN FULL HEIGHT OF CHAIN–LINK FABRIC. PROVIDE ONE BAR FOR EACH GATE AND END POST, AND TWO FOR EACH CORNER AND PULL POST, UNLESS FABRIC IS INTEGRALLY WOVEN INTO POST.

G. TRUSS ROD ASSEMBLIES: HOT–DIP GALVANIZED STEEL ROD AND TURNBUCKLE OR OTHER MEANS OF ADJUSTMENT.

H. BARBED WIRE ARMS: HOT–DIP GALVANIZED PRESSED STEEL OR HOT–DIP GALVANIZED CAST IRON. PROVIDE THE FOLLOWING TYPE, ACCORDING TO ASTM F 626, WITH CLIPS, SLOTS, OR OTHER MEANS FOR ATTACHING STRANDS OF BARBED WIRE, AND MEANS FOR ATTACHING TO POSTS, INTEGRAL WITH POST CAP; ONE FOR EACH POST, UNLESS OTHERWISE INDICATED. PROVIDE CORNER ARMS AT FENCE CORNER POSTS, UNLESS EXTENDED POSTS ARE INDICATED.
1. TYPE I, SINGLE SLANTED ARM (45 DEGREE).

I. TIE WIRES, CLIPS, AND FASTENERS: PROVIDE THE FOLLOWING TYPES ACCORDING TO ASTM F 626:
1. STANDARD ROUND WIRE TIES: FOR ATTACHING CHAIN–LINK FABRIC TO POSTS, RAILS, AND FRAMES, COMPLYING WITH THE FOLLOWING:
   a. HOT–DIP GALVANIZED STEEL: 0.148–INCH DIAMETER WIRE; GALVANIZED COATING THICKNESS MATCHING COATING THICKNESS OF CHAIN–LINK FENCE FABRIC.
2. ROUND WIRE HOG RINGS: HOT–DIP GALVANIZED STEEL FOR ATTACHING CHAIN–LINK FABRIC TO HORIZONTAL TENSION WIRES.

J. FINISH:
1. METALLIC COATING FOR PRESSED STEEL OR CAST IRON: NOT LESS THAN 1.2 OZ/SQ.FT. ZINC.

VI. DELETED

VII. CAST–IN–PLACE CONCRETE

A. GENERAL: COMPLY WITH ACI 301 FOR CAST–IN–PLACE CONCRETE.

B. MATERIALS: PORTLAND CEMENT COMPLYING WITH ASTM C 150 TYPE I OR III, AGGREGATES COMPLYING WITH ASTM C 33, AND POTABLE WATER FOR READY–MIXED CONCRETE COMPLYING WITH ASTM C 94. MEASURE, BATCH, AND MIX PROJECT–SITE–MIXED CONCRETE ACCORDING TO ASTM C 94.
1. CONCRETE MIXES: NORMAL–WEIGHT CONCRETE AIR ENTRAINED WITH NOT LESS THAN 3000–PSI COMPRESSIVE STRENGTH (28 DAYS), 3–INCH SLUMP, AND 1–INCH MAXIMUM SIZE AGGREGATE.

VIII. GROUT AND ANCHORING CEMENT

A. NONSHRINK, NONMETALLIC GROUT: PREMIXED, FACTORY–PACKAGED, NONSTAINING, NONCORROSIVE, NONGASEOUS GROUT COMPLYING WITH ASTM C 1107. PROVIDE GROUT, RECOMMENDED IN WRITING BY MANUFACTURER, FOR EXTERIOR APPLICATIONS.

B. EROSION–RESISTANT ANCHORING CEMENT: FACTORY–PACKAGED, NONSHRINK, NONSTAINING, HYDRAULIC–CONTROLLED EXPANSION CEMENT FORMULATION FOR MIXING WITH POTABLE WATER AT PROJECT SITE TO CREATE POURABLE ANCHORING, PATCHING, AND GROUTING COMPOUND. PROVIDE FORMULATION THAT IS RESISTANT TO EROSION FROM WATER EXPOSURE WITHOUT NEEDING PROTECTION BY A SEALER OR WATERPROOF COATING AND THAT IS RECOMMENDED IN WRITING BY MANUFACTURER, FOR EXTERIOR APPLICATIONS.

IX. FENCE GROUNDING

A. CONDUCTORS: BARE, SOLID WIRE FOR NO. 6 AWG AND SMALLER; STRANDED WIRE FOR NO. 4 AWG AND LARGER.
1. MATERIAL ABOVE FINISHED GRADE: COPPER OR ALUMINUM.
2. MATERIAL ON OR BELOW FINISHED GRADE: COPPER.
3. BONDING JUMPERS: BRAIDED COPPER TAPE, 1 INCH WIDE, WOVEN OF NO. 30 AWG BARE COPPER WIRE, TERMINATED WITH COPPER FERRULES.

B. CONNECTORS AND GROUNDING RODS: COMPLY WITH UL 467

X. CHAIN–LINK FENCE INSTALLATION

A. POST EXCAVATION: DRILL OR HAND–EXCAVATE HOLES FOR POSTS TO DIAMETERS AND SPACINGS INDICATED, IN FIRM, UNDISTURBED SOIL.

B. POST SETTING: SET POSTS IN CONCRETE AT INDICATED SPACING INTO FIRM, UNDISTURBED SOIL.
1. VERIFY THAT POSTS ARE SET PLUMB, ALIGNED, AND AT CORRECT HEIGHT AND SPACING, AND HOLD IN POSITION DURING SETTING WITH CONCRETE OR MECHANICAL DEVICES.
2. CONCRETE FILL: PLACE CONCRETE AROUND POSTS TO DIMENSIONS INDICATED AND VIBRATE OR TAMP FOR CONSOLIDATION. PROTECT ABOVE GROUND PORTION OF POSTS FROM CONCRETE SPLATTER.
   a. POSTS SET INTO CONCRETE IN SLEEVES, WHERE INDICATED ONLY: USE STEEL PIPE SLEEVES PRESET AND ANCHORED INTO CONCRETE FOR INSTALLING POSTS. AFTER POSTS HAVE BEEN INSERTED INTO SLEEVES, FILL ANNULAR SPACE BETWEEN POST AND SLEEVE WITH NONSHRINK, NONMETALLIC GROUT, MIXED AND PLACED TO COMPLY WITH ANCHORING MATERIAL MANUFACTURER'S WRITTEN INSTRUCTIONS, AND FINISHED SLOPED TO DRAIN WATER AWAY FROM POST.
3. DIMENSIONS AND PROFILE: AS INDICATED HEREINAFTER, UNLESS OTHERWISE NOTED ON DRAWINGS.
   a. SIZE OF FOOTINGS: CONCRETE IS TO EXTEND A MINIMUM OF 6 INCHES BELOW BOTTOM OF POST. TYPICAL FOOTINGS SIZE SHOWN ON DETAILS. (SEE NOTE UNDER INSTALLATION FOR DEEPER EXCAVATIONS AS REQUIRED IN LOOSE SOILS AND FOR POSTS WITH HEAVY LATERAL LOADS).

A. TERMINAL POSTS: LOCATE TERMINAL END, CORNER, AND GATE POSTS PER ASTM F 567 AND TERMINAL PULL POSTS AT CHANGES IN HORIZONTAL OR VERTICAL ALIGNMENT OF 15 DEGREES OR MORE, UNLESS OTHERWISE INDICATED.

B. LINE POSTS: SPACE LINE POSTS UNIFORMLY AT 10 FEET O.C. (MAXIMUM).

C. POST BRACING AND INTERMEDIATE RAILS: INSTALL ACCORDING TO ASTM F 567, MAINTAINING PLUMB POSITION AND ALIGNMENT OF FENCING. INSTALL BRACES AT END AND GATE POSTS AND AT BOTH SIDES OF CORNER AND PULL POSTS.
1. LOCATE HORIZONTAL BRACES AT MIDHEIGHT OF FABRIC 6 FEET OR HIGHER, ON FENCES WITH TOP RAIL AND AT 2/3 FABRIC HEIGHT ON FENCES WITHOUT TOP RAIL. INSTALL SO POSTS ARE PLUMB WHEN DIAGONAL ROD IS UNDER PROPER TENSION.

F. TENSION WIRE: INSTALL ACCORDING TO ASTM F 567, MAINTAINING PLUMB POSITION AND ALIGNMENT OF FENCING. PULL WIRE TAUT, WITHOUT SAGS. FASTEN FABRIC TO TENSION WIRE WITH 0.120–INCH– DIAMETER HOG RINGS OF SAME MATERIAL AND FINISH AS FABRIC WIRE, SPACED A MAXIMUM OF 24 INCHES O.C. INSTALL TENSION WIRE IN LOCATIONS INDICATED BEFORE STRETCHING FABRIC.
1. BOTTOM TENSION WIRE: INSTALL TENSION WIRE WITHIN 4 INCHES OF BOTTOM OF FABRIC AND TIE TO EACH POST WITH NOT LESS THAN SAME DIAMETER AND TYPE OF WIRE.

G. TOP RAIL: INSTALL ACCORDING TO ASTM F 567, MAINTAINING PLUMB POSITION AND ALIGNMENT OF FENCING. RUN RAIL CONTINUOUSLY THROUGH LINE POST CAPS, BENDING TO RADIUS FOR CURVED RUNS AND TERMINATING INTO RAIL END ATTACHED TO POSTS OR POST CAPS FABRICATED TO RECEIVE RAIL AT TERMINAL POSTS. PROVIDE EXPANSION COUPLINGS AS RECOMMENDED IN WRITING BY FENCING MANUFACTURER.

H. INTERMEDIATE RAILS: INSTALL, SPANNING BETWEEN POSTS, WHERE INDICATED OR REQUIRED FOR PERFORMANCE.

I. CHAIN–LINK FABRIC: APPLY FABRIC TO OUTSIDE OF ENCLOSING FRAMEWORK, UNLESS OTHERWISE INDICATED. LEAVE 2 INCHES BETWEEN FINISH GRADE OR SURFACE AND BOTTOM SELVAGE, UNLESS OTHERWISE INDICATED. PULL FABRIC TAUT AND TIE TO POSTS, RAILS, AND TENSION WIRES. ANCHOR TO FRAMEWORK SO FABRIC REMAINS UNDER TENSION AFTER PULLING FORCE IS RELEASED. FABRIC TO BE SECURED TO THE LINE POST WITH TIE WIRES SPACED NO GREATER THAN 12 INCHES ON CENTER AND TO RAIL SPACED NO GREATER THAN 18 INCHES ON CENTER. SECURE FABRIC TO THE TENSION WIRE WITH HOG RINGS SPACED NO GREATER THAN 18 INCHES APART. TIE WIRE SHALL BE WRAPPED 360 DEGREES AROUND THE POST OR RAIL AND THE TWO ENDS TWISTED TOGETHER THREE FULL TURNS. EXCESS WIRE SHALL BE CUT OFF AND BEAT OVER TO PREVENT INJURY. THE INSTALLED FABRIC SHALL HAVE A GROUND CLEARANCE ON NO MORE THAN 2 INCHES.

J. TENSION OR STRETCHER BARS: THREAD THROUGH FABRIC AND SECURE TO END, CORNER, PULL, AND GATE POSTS WITH TENSION BANDS SPACED NOT MORE THAN 15 INCHES O.C.

K. TIE WIRES: USE WIRE OF PROPER LENGTH TO FIRMLY SECURE FABRIC TO LINE POSTS AND RAILS. ATTACH WIRE AT 1 END TO CHAIN–LINK FABRIC, WRAP WIRE AROUND POST A MINIMUM OF 180 DEGREES, AND ATTACH OTHER END TO CHAIN–LINK FABRIC PER ASTM F 626. BEND ENDS OF WIRE TO MINIMIZE HAZARD TO INDIVIDUALS AND CLOTHING.
1. MAXIMUM SPACING: TIE FABRIC TO LINE POSTS AT 12 INCHES O.C. AND TO BRACES AT 24 INCHES O.C.

L. FASTENERS: INSTALL NUTS FOR TENSION BANDS AND CARRIAGE BOLTS ON THE SIDE OF THE FENCE OPPOSITE THE FABRIC SIDE. PEEN ENDS OF BOLTS OR SCORE THREADS TO PREVENT REMOVAL OF NUTS.

M. DELETED

XI. GROUNDING AND BONDING

A. FENCE GROUNDING: INSTALL: WITHIN 100 FEET OF BUILDINGS, STRUCTURES, WALKWAYS, AND ROADWAYS: GROUND AT MAXIMUM INTERVALS OF 250 FEET.

B. PROTECTION AT CROSSINGS OF OVERHEAD ELECTRICAL POWER LINES: GROUND FENCE AT LOCATION OF CROSSING AND AT A MAXIMUM DISTANCE OF 150 FEET ON EACH SIDE OF CROSSING.

C. GROUNDING METHOD: AT EACH GROUNDING LOCATION, DRIVE A GROUNDING ROD VERTICALLY UNTIL THE TOP IS 6 INCHES BELOW FINISHED GRADE. CONNECT ROD TO FENCE WITH NO. 6 AWG CONDUCTOR. CONNECT CONDUCTOR TO EACH FENCE COMPONENT AT THE GROUNDING LOCATION.

D. CONNECTIONS: MAKE CONNECTIONS SO POSSIBILITY OF GALVANIC ACTION OR ELECTROLYSIS IS MINIMIZED. SELECT CONNECTORS, CONNECTION HARDWARE, CONDUCTORS, AND CONNECTION METHODS SO METALS IN DIRECT CONTACT WILL BE GALVANICALLY COMPATIBLE.
1. USE ELECTROPLATED OR HOT–TIN–COATED MATERIALS TO ENSURE HIGH CONDUCTIMTY AND TO MAKE CONTACT POINTS CLOSER IN ORDER OF GALVANIC SERIES.
2. MAKE CONNECTIONS WITH CLEAN, BARE METAL AT POINTS OF CONTACT.
3. MAKE ALUMINUM–TO–STEEL CONNECTIONS WITH STAINLESS–STEEL SEPARATORS AND MECHANICAL CLAMPS.
4. MAKE ALUMINUM–TO–GALVANIZED–STEEL CONNECTIONS WITH TIN–PLATED COPPER JUMPERS AND MECHANICAL CLAMPS.
5. COAT AND SEAL CONNECTIONS HAVING DISSIMILAR METALS WITH INERT MATERIAL TO PREVENT FUTURE PENETRATION OF MOISTURE TO CONTACT SURFACES.

E. BONDING TO LIGHTNING PROTECTION SYSTEM: IF FENCE TERMINATES AT LIGHTNING–PROTECTED BUILDING OR STRUCTURE, GROUND THE FENCE AND BOND THE FENCE GROUNDING CONDUCTOR TO LIGHTNING PROTECTION DOWN CONDUCTOR OR LIGHTNING PROTECTION GROUNDING CONDUCTOR COMPLYING WITH NFPA 780.

COPYRIGHT 2013 BY FANNING/HOWEY ASSOCIATES, INC.

FANNING HOWEY
614.764.4661
www.fhai.com

FLEET MAINTENANCE FACILITY EXPANSION
CITY OF DUBLIN, OHIO

DETAILS, SECTIONS AND FENCE SPECIFICATIONS

DRAWN BY: MDL
CHECKED BY: RVT
COMM. NO.: 213052.00
DATE: July 31, 2013

REVISIONS NO. DATE
#1 08/30/2013 ZONING
#2 11/04/2013 REBID

G4.1

MAINTENANCE FACILITY EXPANSION
213052.00

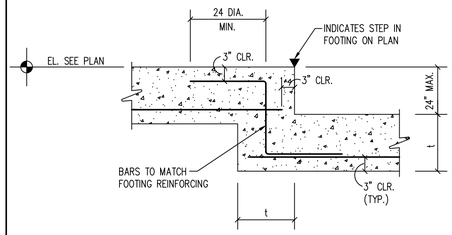

SECTION 1
3/4" = 1'-0"

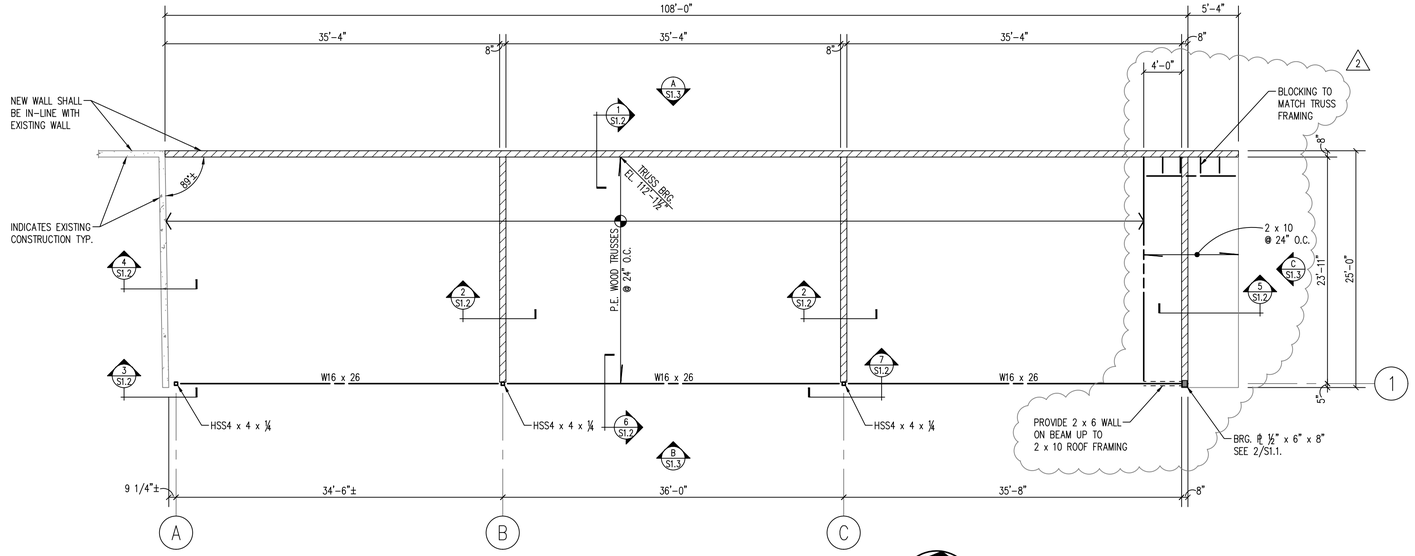

ROOF FRAMING PLAN

1/8" = 1'-0"

NORTH

ROOF FRAMING NOTES

1. DESIGN LIVE LOAD: 25 PSF.
2. ROOF CONSTRUCTION: 1/2" PLYWOOD ON PRE-ENGINEERED WOOD TRUSSES.
3. NEW ROOF STRUCTURE IS TO MATCH THE ELEVATION OF THE EXISTING BUILDING. THE GENERAL CONTRACTOR IS TO FIELD VERIFY ALL EXISTING CONDITIONS AND DIMENSIONS PRIOR TO SUBMITTING SHOP DRAWINGS. IF CONDITIONS OR DIMENSIONS VARY FROM THOSE SHOWN ON THE CONSTRUCTION DRAWINGS, CONTACT THE ARCHITECT PRIOR TO COMMENCING WITH CONSTRUCTION.
4. SEE SHEET S1.4 FOR GENERAL STRUCTURAL NOTES.

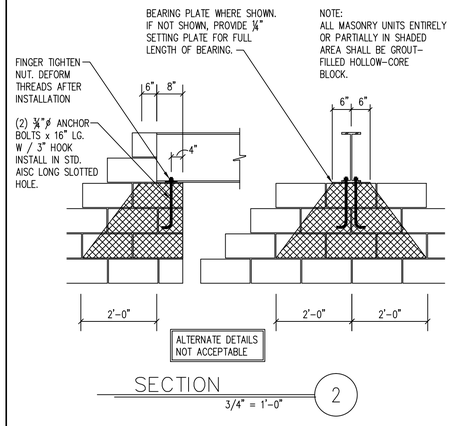

SECTION 2
3/4" = 1'-0"

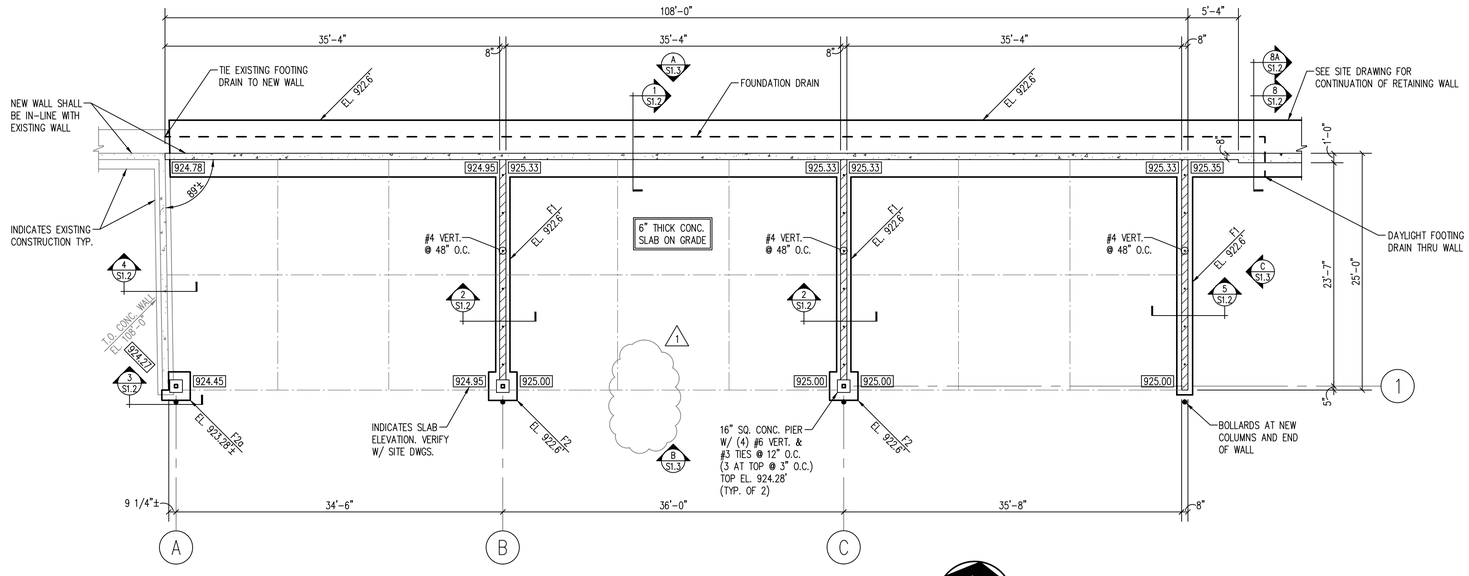

FOUNDATION PLAN

1/8" = 1'-0"

NORTH

FOUNDATION NOTES

1. DESIGN SOIL BEARING PRESSURE = 3000 PSF. PLACE NO CONCRETE PRIOR TO INSPECTION AND APPROVAL OF BEARING SURFACES BY SOILS ENGINEER.
2. KEEP FOUNDATIONS FREE OF WATER AT ALL TIMES. REPLACE WEAKENED SOIL WITH CLASS IV CONCRETE.
3. COORDINATE SLAB ELEVATIONS WITH SITE DRAWINGS AND EXISTING BUILDING.
4. ELEVATIONS SHOWN ON FOOTINGS INDICATE TOP OF FOOTING.
5. SEE 1/S1.1 FOR TYPICAL FOOTING STEP SHOWN THUS ▼. STEP AT A RATIO OF ONE VERTICAL TO TWO HORIZONTAL.
6. THE GENERAL CONTRACTOR IS TO FIELD VERIFY ALL EXISTING CONDITIONS AND DIMENSIONS PRIOR TO SUBMITTING SHOP DRAWINGS. IF CONDITIONS OR DIMENSIONS VARY FROM THOSE SHOWN ON THE CONSTRUCTION DRAWINGS, CONTACT THE ARCHITECT PRIOR TO COMMENCING WITH CONSTRUCTION.
7. SEE SHEET S1.4 FOR GENERAL STRUCTURAL NOTES.

FOOTING SCHEDULE		
MARK	SIZE	REINFORCING
F1	1'-6" WD. x 12" DP.	(2) #5 CONT.
F2	3'-0" SQ. x 12" DP.	(3) #5 CONT.
F2a	3'-0" SQ. x 24"± DP.	(3) #5 CONT.

COPYRIGHT 2013 BY FANNING/HOWEY ASSOCIATES, INC.

STATE OF OHIO
RICHARD E GEERS 42135
REGISTERED PROFESSIONAL ENGINEER
8-1-13

FLEET MAINTENANCE FACILITY
EXPANSION
CITY OF DUBLIN, OHIO

FANNING/HOWEY
614.764.4661 www.fhai.com

FOUNDATION/ROOF FRAMING PLAN

DRAWN BY: CAD
CHECKED BY: SRM
COMM. NO.: 213052.00
DATE: JULY 31, 2013

REVISIONS NO. DATE
1 09/03/2013
2 11/04/2013

S1.1

MAINTENANCE FACILITY EXPANSION
213052.00

\\Server\2013 files\13364 - Dublin Storage Bldg\S1.1.dwg, 11/4/2013 11:29:52 AM

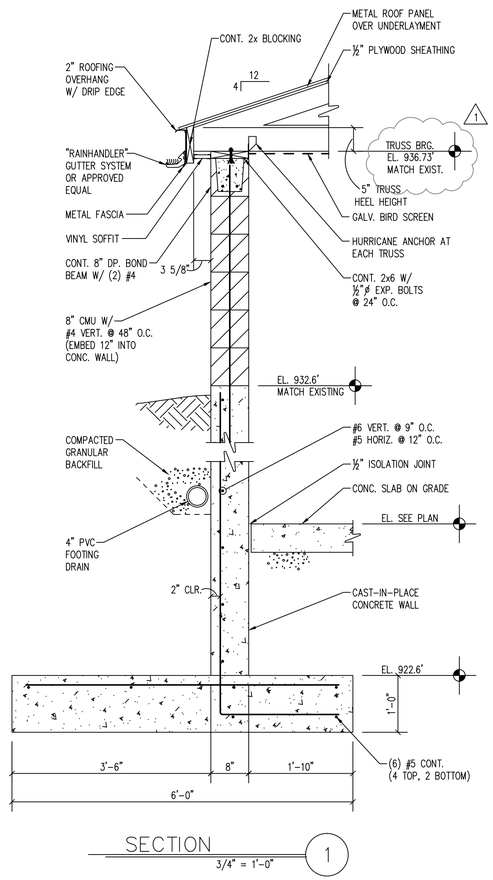

SECTION 1
3/4" = 1'-0"

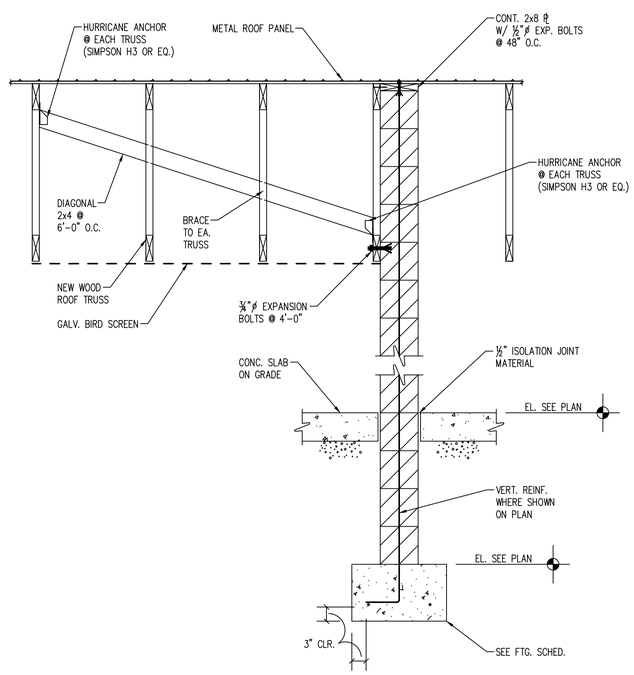

SECTION 2
3/4" = 1'-0"

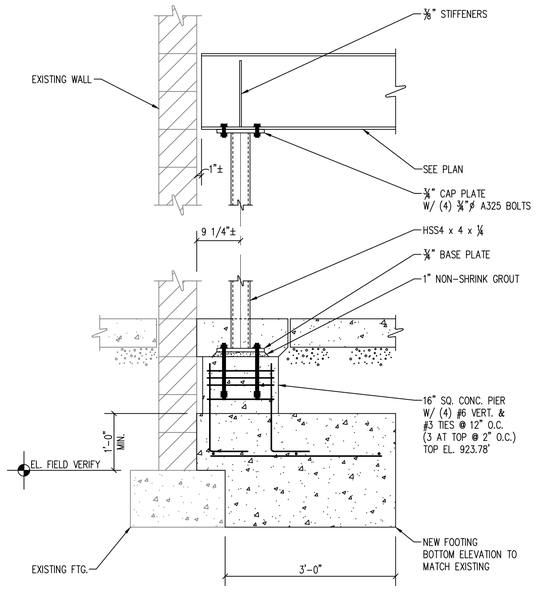

SECTION 3
3/4" = 1'-0"

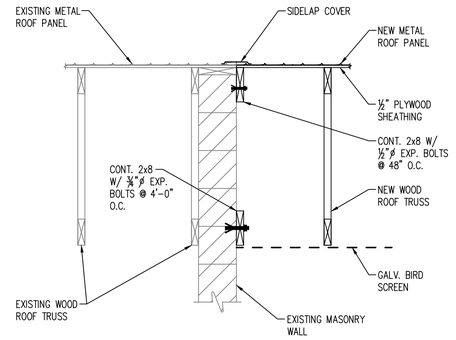

SECTION 4
3/4" = 1'-0"

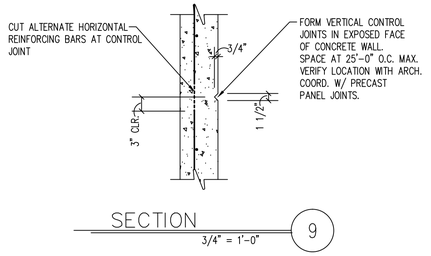

SECTION 9
3/4" = 1'-0"

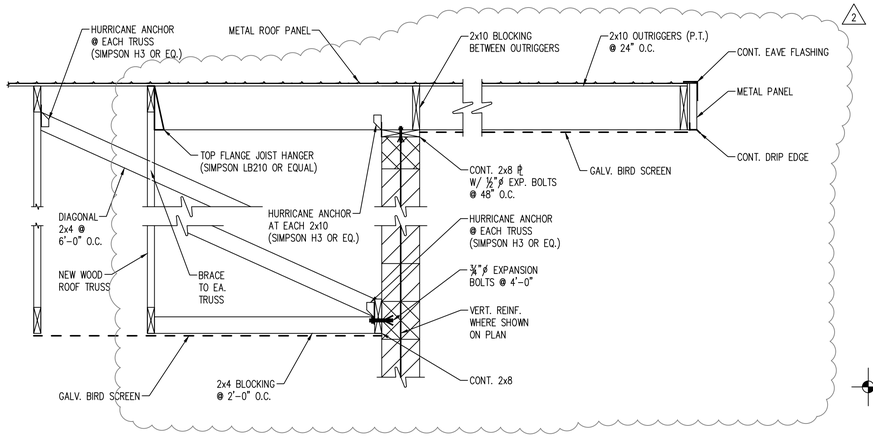

SECTION 5
3/4" = 1'-0"

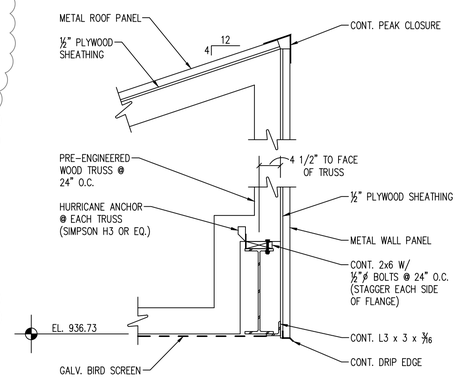

SECTION 6
3/4" = 1'-0"

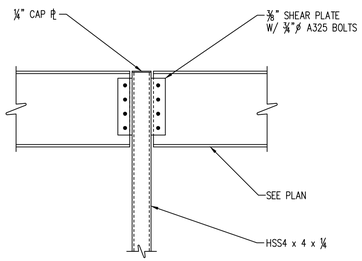

SECTION 7
3/4" = 1'-0"

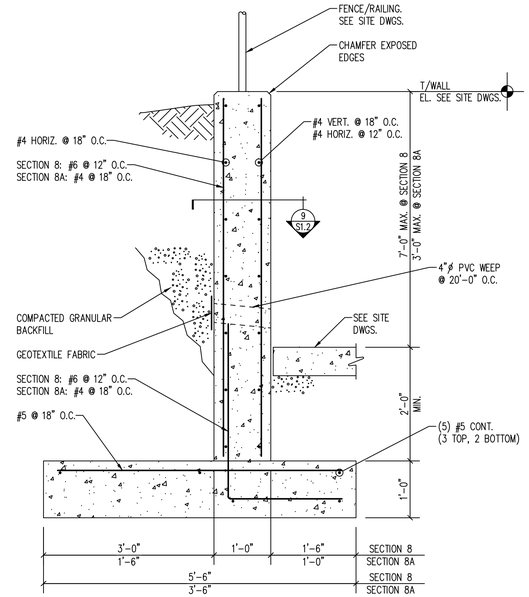

SECTION 8 8A
3/4" = 1'-0"

COPYRIGHT 2013 BY FANNING/HOWEY ASSOCIATES, INC.

STATE OF OHIO
RICHARD L GEERS 42135
REGISTERED PROFESSIONAL ENGINEER
8-1-13

FLEET MAINTENANCE FACILITY EXPANSION
CITY OF DUBLIN, OHIO

FANNING/HOWEY
614.764.4661 www.fhai.com

DETAILS

DRAWN BY, CAD
CHECKED BY, SRM
COMM. NO. 213052.00
DATE: JULY 31, 2013

REVISIONS NO. DATE
1 09/03/2013
2 11/04/2013

S1.2

MAINTENANCE FACILITY EXPANSION
213052.00

\\Server\2013 files\13364 - Dublin Storage Bldg\S1.2.dwg, 11/4/2013 11:30:04 AM

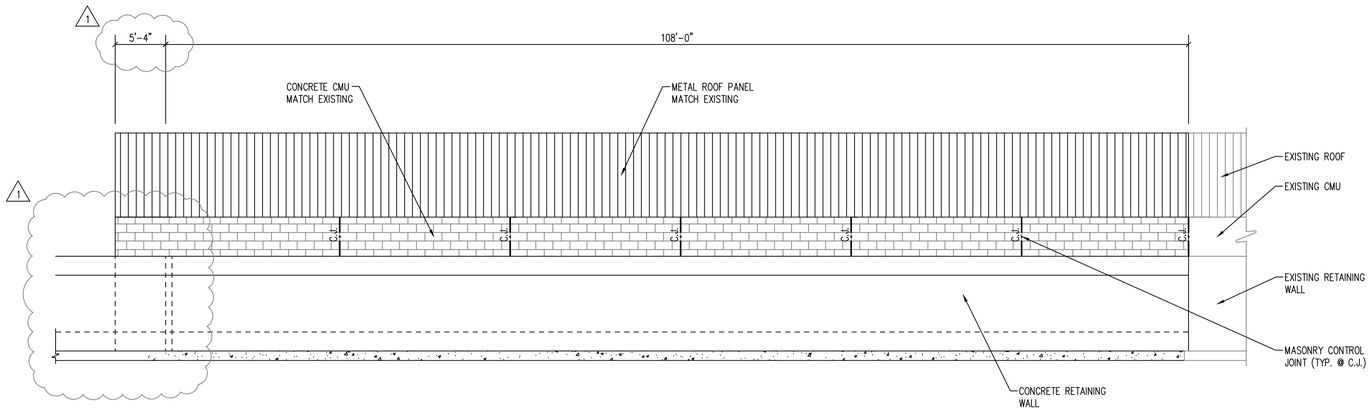

ELEVATION A
1/8" = 1'-0"

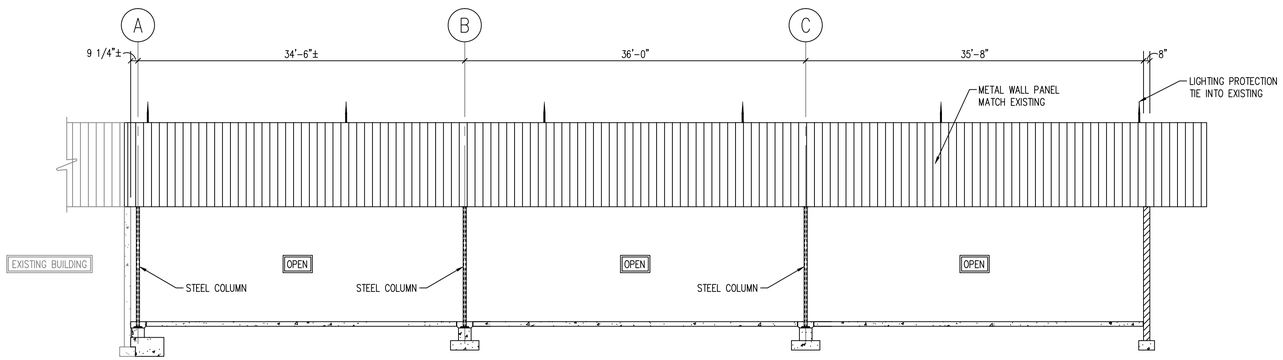

ELEVATION B
1/8" = 1'-0"

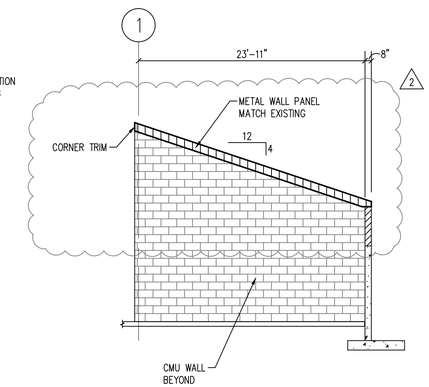

ELEVATION C
1/8" = 1'-0"

COPYRIGHT 2013 BY FANNING/HOWEY ASSOCIATES, INC.

STATE OF OHIO
RICHARD E. GEERS
42135
REGISTERED PROFESSIONAL ENGINEER
8-1-13

FLEET MAINTENANCE FACILITY
EXPANSION
CITY OF DUBLIN, OHIO

FANNING HOWEY
614.764.4661 www.fhai.com

ELEVATIONS

DRAWN BY: CAD
CHECKED BY: SRM
COMM. NO.: 213052.00
DATE: JULY 31, 2013

REVISIONS NO. DATE
1 09/03/2013
2 11/04/2013

S1.3

MAINTENANCE FACILTY EXPANSION
213052.00

\\Server\2013 files\13364 - Dublin Storage Bldg\S1.3.dwg, 11/4/2013 11:30:14 AM

GENERAL STRUCTURAL NOTES

GENERAL

1. THE STRUCTURE IS DESIGNED TO BE SELF-SUPPORTING AND STABLE AFTER THE BUILDING IS FULLY COMPLETED. IT IS SOLELY THE CONTRACTOR'S RESPONSIBILITY TO DETERMINE ERECTION PROCEDURE AND SEQUENCE AND TO INSURE THE SAFETY OF THE BUILDING AND ITS COMPONENT PARTS DURING ERECTION. THIS INCLUDES THE ADDITION OF WHATEVER SHORING, SHEETING, TEMPORARY BRACING, GUYS OR TIEDOWNS WHICH MIGHT BE NECESSARY. SUCH MATERIAL SHALL REMAIN THE CONTRACTOR'S PROPERTY AFTER COMPLETION OF THE PROJECT.

2. IT IS SOLELY THE CONTRACTOR'S RESPONSIBILITY TO FOLLOW ALL APPLICABLE SAFETY CODES AND REGULATIONS DURING ALL PHASES OF CONSTRUCTION.

3. MECHANICAL EQUIPMENT LOADS, OPENINGS AND STRUCTURE IN ANY WAY RELATED TO MECHANICAL REQUIREMENTS ARE SHOWN FOR BIDDING PURPOSES ONLY. CONTRACTOR SHALL OBTAIN APPROVAL OF MECHANICAL AND OTHER TRADES BEFORE PROCEEDING WITH SUCH PORTION OF THE WORK. EXCESS COST RELATED TO VARIATION IN MECHANICAL REQUIREMENTS TO BE BORNE BY MECHANICAL CONTRACTOR.

4. SHOULD ANY OF THE DETAILED INSTRUCTIONS SHOWN ON THE PLANS CONFLICT WITH THE GENERAL STRUCTURAL NOTES, THE SPECIFICATIONS OR WITH EACH OTHER, THE STRICTEST PROVISION SHALL GOVERN.

5. GOVERNING CODE: 2011 OHIO BUILDING CODE.

6. DESIGN LOADS:

ROOF LIVE LOADS: (IN ACCORDANCE WITH 1607.11) — 20 PSF

ROOF SNOW LOADS: (IN ACCORDANCE WITH 1608)
- GROUND SNOW LOAD (Pg) — 20 PSF
- FLAT ROOF SNOW LOAD (Pf) — 17 PSF
- SNOW EXPOSURE FACTOR (Ce) — 1.0
- SNOW LOAD IMPORTANCE FACTOR (IS) — 1.0
- THERMAL FACTOR (Ct) — 1.2

WIND LOADS: (IN ACCORDANCE WITH 1609)
- BASIC WIND SPEED (V) — 90 MPH
- WIND IMPORTANCE FACTOR (IW) — 1.0
- EXPOSURE CATEGORY — EXPOSURE C
- INTERNAL PRESSURE COEFFICIENT (GCpi) — +/- 0.55
- COMPONENTS AND CLADDING PRESSURE: +20 PSF/- 25 PSF

SEISMIC DESIGN DATA: (IN ACCORDANCE WITH 1613)
- OCCUPANCY CATEGORY — II
- SEISMIC IMPORTANCE FACTOR (IE) — 1.1
- SS — 0.125
- S1 — 0.062
- SITE CLASS — D
- SDS — 0.134
- SD1 — 0.100
- SEISMIC DESIGN CATEGORY — B
- SEISMIC FORCE RESISTING SYSTEM — INTERMEDIATE REINF. MASONRY SHEARWALLS
- DESIGN BASE SHEAR (V) — 1.5 (Kips)
- SEISMIC RESPONSE COEFFICIENT (CS) — 3.5
- RESPONSE MODIFICATION FACTOR (R) — 0.04
- ANALYSIS PROCEDURE: — EQUIVALENT LATERAL FORCE

REINFORCED CONCRETE

1. MATERIALS:

A. SPECIFICATIONS: IN GENERAL, COMPLY WITH ACI-301-05, "SPECIFICATIONS FOR STRUCTURAL CONCRETE FOR BUILDINGS".
B. STRUCTURAL CONCRETE:

CLASS	LOCATION	f'c psi
I	FOOTINGS	3,000
II	(NOT USED)	
III	EXTERIOR SLABS ON GRADE, SITE CONCRETE, RETAINING WALLS, AND ALL EXTERIOR CONCRETE NOT OTHERWISE IDENTIFIED	4,000 (W/AIR)
IV	BACKFILL BELOW FOOTINGS	1,500

C. ALL DEFORMED REINFORCING BARS: FY = 60,000 PSI.

2. FIELD MANUAL: PROVIDE AT LEAST ONE COPY OF THE ACI FIELD REFERENCE MANUAL, SP-15 IN THE FIELD OFFICE AT ALL TIMES.

3. CONTINGENCIES:

A. PROVIDE LEAN CONCRETE (CLASS IV) UNDER FOUNDATIONS FOR ACCIDENTAL OVER EXCAVATION, SOFT SPOTS, AND TRENCHES.

4. OPENINGS:

A. OPENINGS SHOWN ARE FOR BIDDING PURPOSES ONLY. RECONCILE THEIR EXACT SIZE AND LOCATION WITH ARCHITECTURAL, MECHANICAL AND OTHER REQUIREMENTS BEFORE PROCEEDING WITH WORK.
B. PROVIDE 2 NO. 5 BARS AROUND ALL WALL OPENINGS, EXTENDING TWO FEET BEYOND OPENING IN EVERY DIRECTION. OPENINGS IN WALLS NOT EXCEEDING 12" X 12" MAY BE SLEEVED AS REQUIRED BY WORKING THE REINFORCING STEEL AROUND THEM.
C. IF ANY OPENING NOT SHOWN ON THE PLANS IS REQUIRED, SECURE APPROVAL OF THE STRUCTURAL ENGINEER BEFORE PROCEEDING.

5. FOOTINGS, PIERS, WALLS:

A. DOWELS IN FOOTINGS TO MATCH VERTICAL PIER OR WALL REINFORCING.
B. PROVIDE CORNER BARS AT WALL AND FOOTING CORNERS TO MATCH HORIZONTAL REINFORCING. MINIMUM LENGTH OF EACH LEG – 36 BAR DIAMETERS.

6. SPLICES:

A. SPLICES FOR VERTICAL STEEL IN WALLS OR PIERS – LAP 30 DIAMETERS, UNLESS NOTED OTHERWISE.
B. MINIMUM LAP FOR FOOTING, SLAB, AND HORIZONTAL WALL REINFORCING = 36 DIAMETERS.

7. CONSTRUCTION JOINTS:

A. CONSTRUCTION JOINTS PERMITTED ONLY WHERE SHOWN OR AS APPROVED BY THE STRUCTURAL ENGINEER.

8. WEDGE ANCHORS AND CHEMICAL ANCHORS:

A. MINIMUM EMBEDMENT SHALL BE 6 BOLT DIAMETERS, EXCEPT AS OTHERWISE DESIGNATED.

STRUCTURAL STEEL

1. MATERIALS:

A. STRUCTURAL STEEL WIDE FLANGE SHAPES: ASTM A992 OR ASTM A572, FY = 50 KSI; STRUCTURAL STEEL CHANNELS, PLATES, ANGLES, ETC.: ASTM A36, FY = 36 KSI; HIGH STRENGTH BOLTS: ASTM A325 OR A490; ANCHOR BOLTS: ASTM A36 OR ASTM A307; ELECTRODES: SERIES E70; STRUCTURAL PIPES: ASTM A53, TYPE E OR S, GRADE B, FY = 35 KSI; STRUCTURAL TUBING: ASTM A500, GRADE B, FY = 46 KSI; SHEAR STUDS: ASTM A108, FY = 60 KSI.

2. SPECIFICATIONS: WELDING PERSONNEL AND PROCEDURES ARE TO BE QUALIFIED PER AWS D1.1. UNLESS SPECIFICALLY SHOWN OTHERWISE, DESIGN, FABRICATION AND ERECTION TO BE GOVERNED BY THE LATEST REVISIONS OF:

A. AISC SPECIFICATION FOR THE DESIGN, FABRICATION AND ERECTION OF STRUCTURAL STEEL FOR BUILDINGS.
B. AISC CODE OF STANDARD PRACTICE.
C. STRUCTURAL WELDING CODE, AWS D1.1 OF THE AMERICAN WELDING SOCIETY.
D. SPECIFICATIONS FOR STRUCTURAL JOINTS USING ASTM A325 OR A490 BOLTS.

3. CONNECTIONS:

A. FIELD CONNECTIONS TO BE BOLTED, EXCEPT AS OTHERWISE INDICATED. SHOP CONNECTIONS TO BE WELDED OR BOLTED. CONNECTIONS TO BE DESIGNED BY THE FABRICATOR TO DEVELOP FULL STRENGTH OF MEMBER OR FORCES SHOWN ON PLANS, WHICHEVER GOVERNS. FOLLOW INSTRUCTIONS ON DRAWINGS FOR GENERAL ARRANGEMENT OR PARTICULAR DETAILS.

4. PAINT:

A. DO NOT PAINT STEEL OR ANCHOR BOLTS WHICH WILL BE ENCASED IN CONCRETE OR MASONRY, OR ANY STEEL WHICH WILL BE LOCATED INSIDE THE FINISHED PRODUCT CONCEALED FROM VIEW. PAINT LINTELS, EXPOSED MEMBERS, AND ALL EXTERIOR STEEL WITH TWO COATS OF RED OXIDE PRIMER.

5. MISCELLANEOUS:

A. PROVIDE HOLES FOR OTHERS. IF OPENING IS NOT SHOWN ON THE STRUCTURAL DRAWINGS, OBTAIN PRIOR APPROVAL.
B. GROUT UNDER BEARING PLATES TO BE NON-SHRINKING TYPE. EXPOSED GROUT SHALL BE NON-METALLIC.
C. STEEL BELOW GRADE TO BE PROTECTED BY A MINIMUM OF 3" OF CONCRETE OR 4" OF MASONRY.
D. PROVIDE 1/4" THICK SETTING PLATES FOR ALL BEAMS AND BEAM LINTELS BEARING ON MASONRY OR CONCRETE WHICH DO NOT REQUIRE A BEARING PLATE.
E. PROVIDE HEAVY WASHER AT ALL ANCHOR BOLTS.
F. FINISH ENDS OF ALL COLUMNS, STIFFENERS AND ALL OTHER MEMBERS IN DIRECT BEARING.
G. PROVIDE BOLT HOLES FOR WOOD NAILERS BOLTED TO BEAMS.
H. STEEL IN CONTACT WITH PRESSURE-TREATED LUMBER SHOULD BE PROTECTED FROM CORROSION FROM PRESERVATIVE CHEMICALS WITH A MINIMUM OF A 20 MIL VAPOR BARRIER. BOLTS AND SCREWS THROUGH PRESSURE-TREATED LUMBER ARE TO BE HOT DIPPED GALVANIZED PER ASTM A153 WITH A MINIMUM G185 COATING OR STAINLESS STEEL WITH CHEMICAL COMPOSITION CONFORMING TO AISI 303/304 OR AISI 316.

MASONRY

1. MATERIALS:

A. CONCRETE BLOCK: ASTM C90 (HOLLOW AND SOLID), f'm = 1,500 PSI.
B. MORTAR: TYPE S, MINIMUM COMPRESSIVE STRENGTH: 1,800 PSI.
C. BOND BEAM AND CORE FILL: ASTM C476, COARSE TYPE.
D. JOINT REINFORCING: STANDARD DUR-O-WAL, MILL GALVANIZED FINISH.

2. MISCELLANEOUS:

A. PROVIDE 100% SOLID BEARING, MINIMUM 3 COURSES UNDER BEAMS, 1 COURSE UNDER JOISTS, UNLESS DETAILED OTHERWISE.
B. FILL CORE SOLID AROUND ANCHOR BOLTS.
C. SET WELD PLATES IN BOND BEAMS AFTER THE GROUT IS PLACED, BUT WHILE IT IS STILL PLASTIC.
D. HOLLOW MASONRY UNITS TO BE LAID WITH FULL MORTAR COVERAGE ON HORIZONTAL AND VERTICAL FACE SHELLS. WEBS SHALL ALSO BE BEDDED IN ALL COURSES OF PIERS, AND PILASTERS, AND IN THE STARTING COURSE ON FOOTINGS, AND WHEN ADJACENT TO CELLS OR CAVITIES TO BE REINFORCED OR FILLED WITH CONCRETE OR GROUT. SOLID UNITS TO BE LAID WITH FULL HEAD AND BED JOINTS.
E. PROVIDE JOINT REINFORCING AT 16", EXCEPT AS NOTED.
F. PROVIDE APPROPRIATE MASONRY ANCHORS AT 16" O.C. MAX. TO TIE MASONRY TO ABUTTING VERTICAL STEEL AND CONCRETE SURFACES.
G. PROVIDE SOLID BLOCKS OR SOLIDLY FILLED HOLLOW BLOCKS AT ALL EXPANSION ANCHOR LOCATIONS.
H. EXPANSION ANCHORS SHALL HAVE MINIMUM EMBEDMENT OF 6 BOLT DIAMETERS, EXCEPT AS DETAILED OTHERWISE.
I. WHERE HOLLOW MASONRY UNITS ARE USED ABOVE HOLLOW MASONRY UNITS OF A DIFFERENT THICKNESS, PROVIDE A CONTINUOUS COURSE OF SOLID MASONRY AT LEAST 8" HIGH BELOW THE TRANSITION.
J. AT CORBELLED WALLS, USE SOLID MASONRY FOR THE COURSE BELOW THE FIRST CORBEL AND FOR EACH CORBELLED COURSE. MAXIMUM CORBEL PER COURSE = 1", UNLESS DETAILED OTHERWISE.
K. ALL SPLICES FOR VERTICAL WALL REINFORCING ARE TO BE LAPPED A MINIMUM OF 48 BAR DIAMETERS.
L. ALL GROUTING OF MASONRY WALLS SHALL BE BY THE LOW-LIFT GROUTING METHOD (MAXIMUM LIFT HEIGHT 4'-0"), UNLESS CLEAN-OUTS AND INSPECTION ARE PROVIDED.

LINTEL NOTES

1. PROVIDE LINTELS OVER ALL OPENINGS IN MASONRY WALLS. NOT ALL LINTELS ARE SHOWN ON THE STRUCTURAL DRAWINGS, REFER TO ARCHITECTURAL AND MECHANICAL DRAWINGS FOR SIZES AND LOCATIONS OF OPENINGS, AND FOR STANDARD LINTELS, USE THE APPROPRIATE LINTEL FROM THE SCHEDULE IN NOTE 2 BELOW. FOR NUMBERED LINTELS DESIGNATED ON THE STRUCTURAL DRAWINGS, USE THE SCHEDULED LINTEL IN NOTE 5 BELOW.

2. PROVIDE ONE ANGLE FOR EACH 4" OF WALL THICKNESS, AND USE 6" MINIMUM BEARING EACH END. FOR BEAM LINTELS, STOP BOTTOM PLATE 1/8" SHORT OF JAMBS, AND USE 8" MINIMUM BEARING EACH END.

MASONRY ROUGH OPENING	SECTION
TO 4'-0"	L 3-1/2 X 3-1/2 X 5/16
4'-1" TO 5'-6"	L 4 X 3-1/2 X 5/16 LLV
5'-7" TO 6'-6"	L 5 X 3-1/2 X 5/16 LLV
6'-7" TO 8'-0"	L 6 X 3-1/2 X 5/16 LLV
8'-1" TO 10'-0"	W8 X 18 W/PL 5/16 X (WALL "T"-1/2")
10'-1" TO 12'-0"	W8 X 21 W/PL 5/16 X (WALL "T"-1/2")

STRUCTURAL LUMBER

1. MATERIALS:

A. STRUCTURAL LUMBER: PRESERVATIVE TREATED SOUTHERN YELLOW PINE #2, UNLESS NOTED OTHERWISE. ALL DESIGN VALUES PER 2005 NFPA NATIONAL DESIGN SPECIFICATION. ANY SUBSTITUTIONS SHALL MEET MINIMUM DESIGN VALUES OF ABOVE MEMBERS.
B. DECKING AND SHEATHING (PLYWOOD): ROOFS – 7/16" OR 1/2" APA RATED SHEATHING, 32/16, EXTERIOR EXPOSURE; WALL SHEATHING – 7/16" APA RATED SHEATHING, 24", EXTERIOR EXPOSURE.
C. ALL LUMBER IS TO BE PRESSURE-TREATED TO RESIST DECAY. PRESERVATIVES USED FOR PRESSURE TREATMENT SHALL BE ALKALINE COPPER QUAT, ACQ-C OR ACQ-D. OTHER PRESERVATIVES PROPOSED FOR USE ARE TO BE SUBMITTED FOR REVIEW PRIOR TO ERECTION OR INSTALLATION ON THE PROJECT.

2. SPECIFICATIONS: UNLESS SPECIFICALLY SHOWN OTHERWISE, DESIGN, FABRICATION AND ERECTION SHALL BE GOVERNED BY THE LATEST REVISIONS OF:

A. NATIONAL DESIGN SPECIFICATION FOR WOOD CONSTRUCTION.
B. U.S. PRODUCT STANDARD PS-1 FOR CONSTRUCTION AND INDUSTRIAL PLYWOOD.
C. APA DESIGN/CONSTRUCTION GUIDE – RESIDENTIAL AND COMMERCIAL.

3. CONNECTIONS:

A. JOISTS TO BEAMS OR JOISTS TO TRUSSES – 16 GA. STD. JOIST HANGERS, UNLESS SHOWN OTHERWISE. BEAMS TO BEAMS – 16 GA. BEAM HANGERS, UNLESS SHOWN OTHERWISE.
B. ALL HANGERS, STRAPS, CAPS, BASES, HOLDOWNS, TIES OR OTHER CONNECTORS IN CONTACT WITH PRESSURE-TREATED LUMBER ARE TO BE BATCH/POST HOT DIPPED GALVANIZED PER ASTM A123 WITH A MINIMUM G185 COATING OR STAINLESS STEEL WITH CHEMICAL COMPOSITION CONFORMING TO AISI 303/304 OR AISI 316.
C. ALL FASTENERS INCLUDING NAILS, ANCHOR BOLTS, POWDER ACTUATED FASTENERS, SCREWS, BOLTS, AND THREADED RODS, IN CONTACT WITH PRESSURE TREATED LUMBER ARE TO BE HOT DIPPED GALVANIZED PER ASTM A153 WITH A MINIMUM G185 COATING OR STAINLESS STEEL WITH CHEMICAL COMPOSITION CONFORMING TO AISI 303/304 OR AISI 316. FASTENERS AND CONNECTORS ARE TO BE OF THE SAME MATERIAL, STAINLESS STEEL OR HOT DIPPED GALVANIZED, DO NOT MIX MATERIALS.
D. ALL MECHANICAL ANCHORS INCLUDING WEDGE ANCHORS AND SLEEVE ANCHORS IN CONTACT WITH PRESSURE TREATED LUMBER ARE TO BE STAINLESS STEEL WITH CHEMICAL COMPOSITION CONFORMING TO AISI 303/304 OR AISI 316.
E. SHEATHING TO JOISTS/TRUSSES: ROOFS – USE 10d NAILS AT 6" ON CENTER AT PANEL EDGES AND 12" ON CENTER AT INTERMEDIATE SUPPORTS. WALLS – USE 8d NAILS AT 6" ON CENTER AT PANEL EDGES AND 12" ON CENTER AT INTERMEDIATE SUPPORTS.
F. TRUSS TO WALL OR RAFTERS TO WALL – STANDARD HURRICANE ANCHORS AT EACH BEARING POINT.
G. ALL NAILS ARE TO BE COMMON WIRE NAILS, UNLESS SPECIFICALLY NOTED OTHERWISE.

TRUSS NOTES

1. MATERIALS:

A. ALL LUMBER IS TO BE PRESSURE-TREATED TO RESIST DECAY. PRESERVATIVES USED FOR PRESSURE TREATMENT SHALL BE ALKALINE COPPER QUAT, ACQ-C OR ACQ-D. OTHER PRESERVATIVES PROPOSED FOR USE ARE TO BE SUBMITTED FOR REVIEW PRIOR TO ERECTION OR INSTALLATION ON THE PROJECT.
B. CONNECTIONS: ALL INTERNAL TRUSS CONNECTIONS ARE TO BE DESIGNED BY THE TRUSS MANUFACTURER. CONNECTORS SHALL BE DEFORMED PLATE TYPE, OF MINIMUM 20 GAUGE GALVANIZED STEEL SHEET. ALL JOINTS ARE TO BE DESIGNED USING METHODS AS SET FORTH IN TPI STANDARDS.
C. HANGERS: ALL TRUSS TO TRUSS HANGERS SHALL BE MINIMUM 16 GA., AND SHALL BE PROVIDED BY THE TRUSS SUPPLIER.
D. ALL HANGERS, STRAPS, CAPS, BASES, HOLDOWNS, TIES OR OTHER CONNECTORS IN CONTACT WITH PRESSURE-TREATED LUMBER ARE TO BE BATCH/POST HOT DIPPED GALVANIZED PER ASTM A123 WITH A MINIMUM G185 COATING OR STAINLESS STEEL WITH CHEMICAL COMPOSITION CONFORMING TO AISI 303/304 OR AISI 316.
E. ALL FASTENERS INCLUDING NAILS, ANCHOR BOLTS, POWDER ACTUATED FASTENERS, SCREWS, BOLTS, AND THREADED RODS, IN CONTACT WITH PRESSURE TREATED LUMBER ARE TO BE HOT DIPPED GALVANIZED PER ASTM A153 WITH A MINIMUM G185 COATING OR STAINLESS STEEL WITH CHEMICAL COMPOSITION CONFORMING TO AISI 303/304 OR AISI 316. FASTENERS AND CONNECTORS ARE TO BE OF THE SAME MATERIAL, STAINLESS STEEL OR HOT DIPPED GALVANIZED, DO NOT MIX MATERIALS.

2. SPECIFICATIONS AND REFERENCE STANDARDS: UNLESS SPECIFICALLY SHOWN OTHERWISE, DESIGN, FABRICATION, ERECTION, HANDLING AND BRACING REQUIREMENTS ARE TO BE GOVERNED BY THE LATEST REVISIONS OF:

A. NATIONAL DESIGN SPECIFICATIONS FOR STRESS-GRADE LUMBER AND ITS FASTENINGS.
B. TIMBER CONSTRUCTION STANDARDS.
C. DESIGN SPECIFICATIONS FOR LIGHT METAL PLATE CONNECTED WOOD TRUSSES.
D. TRUSS PLATE INSTITUTE PUBLICATION-BTW BRACING WOOD TRUSSES: COMMENTARY AND RECOMMENDATIONS EXCEPT AS NOTED BELOW.

3. DESIGN :

A. ALL TRUSSES ARE TO BE DESIGNED BY THE TRUSS MANUFACTURER FOR THE FOLLOWING MINIMUM LOADS:
   1. DESIGN LOADINGS:
      - TOP CHORD: LIVE LOAD: 25 PSF; DEAD LOAD: 10 PSF; UPLIFT PER BUILDING CODE, USING REQUIREMENTS FOR "PARTIALLY OPEN STRUCTURE".
      - BOT CHORD: DEAD LOAD: 5 PSF; LIVE LOAD: 10 PSF MINIMUM OR 20 PSF FOR ATTIC STORAGE IN ACCORDANCE WITH 2011 OHIO BUILDING CODE, TABLE 1607.1.
B. TRUSS DESIGNS ARE TO INCLUDE ADDITIONAL LOADING CONDITIONS SUCH AS DRIFT LOADS AND UNBALANCED LOADS NECESSARY TO CONFORM TO THE BUILDING CODE.
C. TRUSS DESIGN LOADS ARE TO INCLUDE MECHANICAL EQUIPMENT, OPERABLE WALLS, OR OTHER INCREASED LIVE LOADS INDICATED ON THE CONSTRUCTION DRAWINGS. REFER TO THE ARCHITECTURAL AND MECHANICAL DRAWINGS TO COORDINATE LOCATIONS, SIZES, AND WEIGHTS TO BE SUPPORTED.
D. WHERE TRUSSES ARE REQUIRED TO FRAME INTO OTHER TRUSSES, DESIGN OF THE HANGERS SHALL BE THE RESPONSIBILITY OF THE TRUSS SUPPLIER. THE TRUSS SUPPLIER SHALL MAKE NECESSARY PROVISIONS IN THE SUPPORTING TRUSS TO ACCEPT THE TYPE OF HANGER REQUIRED.
E. THE DESIGN OF ALL WEB MEMBER PERMANENT BRACE SIZES AND CONNECTIONS, REQUIRED FOR THE STRUCTURAL ADEQUACY OF THE TRUSSES, SHALL BE THE SOLE RESPONSIBILITY OF THE TRUSS SUPPLIER.
F. ADDITIONAL MEMBER PERMANENT BRACE SIZES AND CONNECTIONS, NOT PROVIDED BY THE SHEATHING SHOWN ON THE CONSTRUCTION DRAWINGS, SHALL ALSO BE THE RESPONSIBILITY OF THE TRUSS SUPPLIER. THIS BRACING CAN INCLUDE, BUT IS NOT LIMITED TO, TOP CHORD BRACING FOR TRUSSES WITH PIGGY-BACKS, AND INTERMEDIATE BRACES FOR GABLE TRUSS WEB MEMBERS.

4. SUBMITTALS:

A. TRUSS DESIGNS ARE TO BE SUBMITTED FOR REVIEW PRIOR TO FABRICATION. TRUSS SUBMITTAL SHALL INCLUDE THE FOLLOWING INFORMATION:
   1. DESIGN INFORMATION FOR EACH TYPE OF TRUSS SUPPLIED.
   2. LAYOUT DRAWING INDICATING LOCATION OF EACH SPECIFIC TRUSS TYPE.
   3. PERMANENT MEMBER BRACE LOCATIONS, BRACE SIZES, AND CONNECTIONS.
   4. TRUSS HANGER TYPE AND LOCATION, FOR ALL TRUSSES FRAMING INTO TRUSSES.
   5. TRUSS DESIGNS AND LAYOUT DRAWING STAMPED BY A REGISTERED PROFESSIONAL ENGINEER, STATE OF OHIO.
B. SUBMITTALS WHICH DO NOT INCLUDE THE ABOVE LISTED INFORMATION WILL BE RETURNED TO THE CONTRACTOR PRIOR TO REVIEW.

5. MISCELLANEOUS: UNLESS SPECIFICALLY NOTED OTHERWISE ON THE APPROVED TRUSS SHOP DRAWINGS, ALL MEMBERS OF MULTIPLE TRUSSES ARE TO BE NAILED TOGETHER WITH 10d COMMON NAILS AT 8" O.C., FOR DOUBLE TRUSSES, OR WITH 16d COMMON NAILS AT 8" O.C. FROM EACH SIDE, FOR TRIPLE TRUSSES.

SPECIAL INSPECTIONS AND TESTING

1. INSPECTION AGENCY:

A. INSPECTION AGENCY OR INDIVIDUAL SHALL BE RETAINED AS INDICATED IN THE SPECIFICATIONS TO CONDUCT THE INSPECTIONS AND TESTING OUTLINED BELOW AND AS DEFINED IN CHAPTERS 16 AND 17 OF THE 2011 EDITION OF THE OHIO BUILDING CODE.
B. SPECIAL INSPECTORS SHALL KEEP RECORDS OF ALL INSPECTIONS AND TESTS AND SUBMIT RECORDS TO THE ARCHITECT (1704.1.2).
C. THE GENERAL CONTRACTOR SHALL NOTE IN THE SPACES BELOW, ON THE RECORD SET OF DRAWINGS KEPT ON-SITE, THE AGENCY OR INDIVIDUAL RETAINED TO CONDUCT THE SPECIAL INSPECTIONS AND TESTS.

2. MATERIALS:

A. SOIL — AGENCY: ____________
   1. BEARING CAPACITY — PERIODIC

B. CONCRETE — AGENCY: ____________
   1. MIX DESIGNS — PERIODIC
   2. ANCHOR BOLT PLACEMENT — CONTINUOUS
   3. REINFORCING PLACEMENT — CONTINUOUS
   4. CONCRETE SAMPLING — CONTINUOUS
   5. CURING TECHNIQUES — PERIODIC

C. MASONRY — AGENCY: ____________
   1. MATERIAL CERTIFICATES OF COMPLIANCE — PERIODIC
   2. MORTAR PROPORTIONS — PERIODIC
   3. PLACEMENT OF CMU AND JOINTS — PERIODIC
   4. REINFORCING PLACEMENT — CONTINUOUS
   5. GROUT PLACEMENT — PERIODIC

D. STRUCTURAL STEEL — AGENCY: ____________
   1. HIGH STRENGTH BOLTING – SNUG TIGHT — PERIODIC
   2. INSPECTION OF STEEL FRAME — PERIODIC

METAL ROOF AND WALL PANELS

1. MATERIALS

A. GENERAL: FACTORY ROLL-FORMED, MATCH EXISTING PROFILE AND COLOR.
B. PANEL MATERIAL AND FINISH: 24 GAUGE GALVANIZED STEEL, G90 COATING, ASTM A 653, G90 WITH 70 PERCENT FLUOROPOLYMER (PVDF) COATING.
C. UNDERLAYMENT: SELF-ADHERING, HIGH-TEMPERATURE SHEET.

2. SPECIFICATIONS AND REFERENCE STANDARDS

A. AMERICAN INSTITUTE OF STEEL CONSTRUCTION (AISC).
B. METAL BUILDING MANUFACTURERS ASSOCIATION (MBMA): MBMA METAL BUILDING SYSTEMS MANUAL.
C. UNDERWRITERS LABORATORIES (UL): UL580: CLASS 90.

3. DESIGN: ROOF AND WALL PANELS

A. DESIGN PANELS IN ACCORDANCE WITH AISI NORTH AMERICAN SPECIFICATION FOR THE DESIGN OF COLD-FORMED STEEL STRUCTURAL MEMBERS.
B. DESIGN PANELING SYSTEM TO SUPPORT DESIGN LIVE, SNOW, AND WIND LOADS.
C. TRIM AND ROOF TRANSITION FLASHINGS: ALLOW ROOF PANELS TO MOVE RELATIVE TO WALL PANELS AS ROOF EXPANDS AND CONTRACTS WITH TEMPERATURE CHANGES.

4. SUBMITTALS

A. PRODUCT DATA: SUBMIT METAL PANEL SYSTEM MANUFACTURER'S PRODUCT INFORMATION, SPECIFICATIONS, AND INSTALLATION INSTRUCTIONS OF COMPONENTS AND ACCESSORIES.
B. SHOP DRAWINGS: SUBMIT METAL PANEL SYSTEM MANUFACTURER'S SHOP DRAWINGS, INCLUDING PLANS, ELEVATIONS, SECTIONS, AND DETAILS, INDICATING TRIM DETAILS, AND ACCESSORY INSTALLATION DETAILS TO CLEARLY INDICATE PROPER ASSEMBLY OF COMPONENTS.
C. SUBMIT CERTIFICATION VERIFYING THAT THE METAL ROOF SYSTEM HAS BEEN TESTED AND APPROVED BY UL AS CLASS 90.

5. WARRANTY

A. METAL PANEL SYSTEM MANUFACTURER SHALL PROVIDE A WRITTEN WEATHERTIGHTNESS WARRANTY FOR A MAXIMUM OF 10 YEARS AGAINST LEAKS IN ROOF PANELS, ARISING OUT OF OR CAUSED BY ORDINARY WEAR AND TEAR UNDER NORMAL WEATHER AND ATMOSPHERIC CONDITIONS.
B. METAL PANEL SYSTEM MANUFACTURER SHALL PROVIDE A WRITTEN WARRANTY FOR 25 YEARS AGAINST PERFORATION OF METAL ROOF AND WALL PANELS DUE TO CORROSION UNDER NORMAL WEATHER AND ATMOSPHERIC CONDITIONS.
C. METAL PANEL MANUFACTURER SHALL PROVIDE A PAINT WRITTEN WARRANTY FOR A MINIMUM OF 20 YEARS AGAINST CRACKING, PEELING, CHALKING, AND FADING OF EXTERIOR COATING ON PAINTED ROOF AND WALL PANELS.

PROVIDE CONTROL JOINTS ABOVE AND BELOW JAMBS PER THE FOLLOWING SCHEDULE:

OPNG. WIDTH	CONTROL JOINTS
LESS THAN 2'-0"	NONE REQ'D.
2'-0" TO 6'-0"	ONE JAMB ONLY
WIDER THAN 6'-0"	BOTH JAMBS

PROVIDE CONTROL JOINTS ABOVE AND BELOW JAMBS PER THE FOLLOWING SCHEDULE:

OPNG. WIDTH	CONTROL JOINTS
LESS THAN 2'-0"	NONE REQ'D.
2'-0" TO 6'-0"	ONE JAMB ONLY
WIDER THAN 6'-0"	BOTH JAMBS

TYPICAL REINFORCED MASONRY WALL CONSTRUCTION

COPYRIGHT 2013 BY FANNING/HOWEY ASSOCIATES, INC.

STATE OF OHIO — RICHARD E. GEERS 42135 — REGISTERED PROFESSIONAL ENGINEER — 8-1-13

FLEET MAINTENANCE FACILITY EXPANSION
CITY OF DUBLIN, OHIO

FANNING HOWEY
614.764.4661 www.fhai.com

GENERAL STRUCTURAL NOTES

DRAWN BY: CAD — CHECKED BY: SRM
COMM. NO.: 213052.00 — DATE: JULY 31, 2013

REVISIONS NO. DATE

S1.4

MAINTENANCE FACILTY EXPANSION
213052.00

\\Server\2013 Files\13364 - Dublin Storage Bldg\S1.4.dwg, 9/4/2013 1:13:50 PM

ELECTRICAL SPECIFICATIONS

PART 1 GENERAL

1.1 SCOPE OF WORK

A. Part 1 General

B. Part 2 Material and Installation

C. Part 3 Grounding

1.2 The party performing the Work under this Section hereinafter referred to as the Contractor, shall furnish all labor, material, tools, equipment, services, and related accessories for a complete installation of all electrical work as indicated in the Drawings and Specifications. Items omitted from either the Specifications or the Drawings, but shown or described in the other, and all items necessary to make the electrical system functional and complete per required codes, shall form a part of the Work. No "extras" will be allowed.

1.3 All work, material, and equipment shall comply with all requirements of the latest editions and interim amendments of the National Electrical Code (NEC), National Electrical Safety Code, National Fire Protection Association, OSHA, Americans with Disabilities Act (ADA), and all applicable federal, state, and local laws and ordinances. All electrical equipment provided under this Contract shall be new (except where otherwise noted) and shall comply with the requirements of the Underwriters' Laboratories (UL) and bear the UL label.

1.4 Any discrepancies within Drawings and Specifications shall be promptly brought to the attention of the Engineer for clarification during the bidding period. No allowance shall subsequently be made to the Contractor by reason of his failure to have brought said discrepancies to the attention of the Engineer during the bidding period or of any error on the Contractor's part.

1.5 The Contractor shall check all existing field conditions (or Civil, Structural, Architectural and Mechanical trades work) for possible interference caused by conditions in the field before bid is made. No allowance shall subsequently be made to the Contractor by reason of his failure to have made such examinations or of any error on his part.

1.6 The Contractor shall be held to have examined the premises and site to as to compare them with the Contract Documents and to have satisfied himself as to the conditions of the premises, the site, any obstructions, the actual levels, access panels, and all other existing conditions. The Contractor shall verify all dimensions in the field, shall check location of and connection to existing facilities, and shall assume all responsibility for same.

1.7 Should any changes in the Drawings and Specifications be required to conform to the above regulations, the Contractor shall notify the Owner or his representative at the time of submitting his bid. After entering into the Owner–Contractor Agreement, the Contractor shall be held to complete all Work necessary to meet these requirements without additional expense to the Owner.

1.8 The Contractor shall receive, store, uncrate, protect, and install Owner–furnished equipment with all appurtenances required to place the equipment in operation, ready for use. The Contractor shall be responsible for the equipment when received, as if he had purchased the equipment himself.

1.9 The Contractor shall secure and pay for all permits and inspections required for the Work.

1.10 The Contractor shall not allow or cause any of the Work to be covered up or enclosed until it has been inspected. Any Work that is enclosed or covered up before such inspection and test shall be uncovered at the Contractor's expense; after it has been inspected, the Contractor shall restore the Work to its original condition at his own expense.

1.11 All general trades and mechanical drawings shall be checked before installing any outlets, power wiring, etc. For purposes of these drawings and specification, the word "provide" shall mean furnish and install.

1.12 The Contractor shall turn over all certificates of approval for inspections of electrical work to the Owner promptly when received. These certificates must be received before payment will be made for the Work involved.

1.13 The Contractor shall keep an up–to–date record of all deviations from the Contract Documents. At completion of this Project, the Contractor shall deliver a set of Project Record Drawings and Specifications showing these deviations to the Owner.

1.14 All work shall be done in accordance with the Contract Documents, in a neat and workmanlike manner consistent with recognized good practice, and shall be subject to the approval of the Owner or his representative.

1.15 Certain areas require the Contractor to remove, add to, or relocate portions of existing Work. It shall be the Contractor's responsibility to remove ceilings, portions of walls, etc., in a manner so that he may install new Work. The Contractor shall then patch, repair and/or replace ceilings, walls, etc., to match existing conditions. The above applies to all areas not specifically indicated on Architectural Drawings as work to be performed by General Trades Contractor(s).

1.16 If the Contractor fails to do any required patching or repair any damage resulting from the installation of the electrical Work, such patching or repairing shall be done by the Owner and the cost shall be paid by the Contractor.

1.17 All equipment furnished with finished surfaces from manufacturer are not to be defaced in any way and shall be cleaned to original finish at time of completion of Work except where otherwise noted.

1.18 The Contractor shall conduct such tests and adjustments of equipment as required to verify equipment performance. Such tests shall be conducted in the presence of the Owner or his representative.

1.19 The Contractor shall remove all debris resulting from the Work, as well as all tools, equipment, etc., from the site upon completion of this Contract. All equipment, including lighting fixtures and lenses shall be clean and free from dirt, grease, finger marks, etc., before final acceptance.

1.20 All equipment furnished and Work performed under the Contract Documents shall be guaranteed against defects in materials or workmanship for a period of one (1) year from the date of final acceptance. Any failure of equipment or work due to defects in materials or workmanship shall be corrected by the Contractor at no cost to the Owner.

1.21 During building operations some existing installation may be exposed that will have to be changed, altered, re–routed, removed, and/or abandoned. Any such Work which in the trade comes under the jurisdiction of the Electrical Contractor shall be done by this Contractor without extra cost to the Owner as though fully detailed and/or described on Plans and in Specifications.

1.22 During the construction operation the Contractor shall at all times maintain electrical utilities to the building without interruption. Should it be necessary to interrupt any electrical service or utility, the Contractor shall secure permission in writing from the Owner for such interruption at least 72 hours in advance. Any interruption shall be made with minimum amount of inconvenience to the Owner and any shutdown time shall have to be on an overtime basis and such time will be included in electrical bid.

1.23 Provide Shop Drawings for wiring devices, wall plates, light fixtures and in–grade pull boxes.

ELECTRICAL SPECIFICATIONS

PART 2 MATERIAL AND INSTALLATION

2.1 All underground conduit shall be Rigid Nonmetallic Conduit NEMA TC 2, Type EPC–40–PVC, UL 651, with matching fittings by same manufacturer as the conduit, complying with NEMA TC 3 and UL 514B. Minimum depth of for underground conduits is 3'–0" below finish grade. Refer to Drawings for special conditions requiring different depth. All trenching and backfill for Electrical Work by this Contractor. Refer to Site Drawings and Specifications for trenching and backfill requirements. Provide Warning Tape maker for all underground conduit installations. Warning Tape shall be permanent, yellow–colored, continuous–printed with "Electric" logo, polyethylene tape, not less than 6 inches wide by 4 mils thick, compounded for permanent direct–burial service, embedded continuous metallic strip or core.

2.2 Electrical metallic tubing (E.M.T.) may be used in lieu of rigid conduit for locations indoors for conduits 4" trade size and smaller.

2.3 All conduits shall be 3/4" minimum except where otherwise noted. All conduits in finished spaces shall be concealed.

2.4 The same type of conduit shall be used for all communication and low voltage systems as for power and lighting. Where cables for communications and low–voltage systems are run exposed (not in conduit), conduit sleeves shall be installed in all fire and smoke walls for the passage of said cables through the fire and smoke walls.

2.5 All conduits and fittings shall be run in straight lines parallel with or at right angles to building walls, partitions, floors and ceilings. When the location on the Plans interferes with other work in place or subsequently to be placed, the Contractor shall work out a satisfactory location, free from interferences.

2.6 Individual conduits shall be rigidly supported and clamped with one–hole conduit clamps, conduit beam clamps, conduit hangers, or wall brackets, as required for the type of construction and/or as indicated on the Drawings. The use of perforated flat steel or nylon straps for supporting conduits will not be permitted. Conduits shall be secured so that they cannot be moved without the use of tools.

2.7 Where a group of conduits run together, support the conduits on hangers fabricated from light steel framing unless otherwise shown on the Drawings.

2.8 All conduit connections to motors, limit switches, and similar devices shall be made of interlocked galvanized steel with a copper bonding conductor wound spirally in the space between each convolution on the inside of the conduit, and shall have an extruded polyvinyl chloride cover to protect the wiring against moisture, oil, chemicals, and corrosive fumes.

A. The conduit shall be:
1. Anaconda American Brass "Sealtite" type UA.
2. Electri–Flex Co. "Liquidtite" type L.A./L.O.R.
3. Or approved equal.

2.9 Provide pull boxes, junction boxes, splice boxes and fittings where shown and at other locations as necessary.

2.10 IN–GRADE PULL BOXES
A. Refer to Drawings for in–grade pull boxes material requirements.
B. Install boxes level and plumb and with orientation and depth coordinated with connecting ducts to minimize bends and deflections required for proper entrances. Use box extension if required to match depths of ducts, and seal joint between box and extension as recommended by the manufacturer.
C. Unless otherwise indicated, support units on a level bed of crushed stone or gravel, graded from 1/2–inch sieve to No. 4 sieve and compacted to same density as adjacent undisturbed earth.
D. Elevation: In paved areas and trafficways, set so cover surface will be flush with finished grade. Set covers of other handholes 1 inch above finished grade.
E. Install boxes with bottom below the frost line, 30 inches below grade.
F. Install removable hardware, including pulling eyes, cable stanchions, cable arms, and insulators, as required for installation and support of cables and conductors and as indicated. Select arm lengths to be long enough to provide spare space for future cables, but short enough to preserve adequate working clearances in the enclosure.
G. Field–cut openings for ducts and conduits according to enclosure manufacturer's written instructions. Cut wall of enclosure with a tool designed for material to be cut. Size holes for terminating fittings to be used, and seal around penetrations after fittings are installed.

2.11 All single conductor power wire shall be 600 volt, type XHHW, THWN, or THHN with copper conductors, except where otherwise noted.

2.12 All single conductor wires run in or through fluorescent fixtures shall be 600 volt, type RHH, THHN, or XHHW.

2.13 All conductors shown on the Drawings are copper, except where otherwise noted. Aluminum conductors shall not be substituted for copper conductors.

2.14 Minimum wire size shall be No.12 AWG, except where otherwise noted. Wire Size No. 8 AWG and larger shall be stranded, and all smaller wires shall be solid except where otherwise noted.

2.15 Conductors for power and lighting feeders and branch circuits shall have conductor identification. Conductor identification shall be as called for in the National Electrical Code. A separate color shall be used for each phase conductor of each voltage system. Color coding shall be consistent throughout.

2.16 Conductors for control, signal, and communications wiring shall be identified at all terminal and splice points with permanent self–adhesive wire identification markers. Wire markers shall be made of vinyl impregnated cloth, vinyl plastic, or other permanent materials. Wire markers made of paper tape shall not be used.

2.17 Wiring devices shall be specification grade NEMA standard WD–1, Hubbell, or approved equal, as follows:

A. SPST Toggle Switch Hubbell No.1221

B. 3–Way Toggle Switch Hubbell No.1223

C. Duplex GFCI Convenience Receptacles, 125 V, 20 A: Hubbell No. GF20L

2.18 All switches and receptacles shall have gray finish. Device wall plates shall be Wet–Location, Weatherproof type Cover Plates, NEMA 250, "in–use" type complying with type 3R weather–resistance, die–cast aluminum. Receptacle device plates shall also have hasp on cover for padlock.

2.19 All switches and receptacles shall be flush mounted. All outlets are to be fitted with device plates that completely conceal the openings.

2.20 All switches shall be "off" in the down position.

2.21 Elevations for outlets from finished floor to center of outlet shall be as follows, except where otherwise noted:

A. Switches 3'–8"

B. Receptacles in finished spaces 4'–0", unless otherwise noted

ELECTRICAL SPECIFICATIONS

2.22 Provide all angle iron, channels, rods, supports, or hangers required to install any electrical equipment called for by the Contract Documents.

2.23 Locations of conduits, switches, receptacles, lights, motors, etc., outlets shown on Drawings are approximate. The Contractor shall use good judgment in placing the preceding to eliminate all interference with ducts, piping, etc.

2.24 Check all door swings so that light switches are not located behind doors. Relocate switches as required, with approval from the Owner or his representative.

2.25 The Owner or his representative reserves the right to reject any equipment or materials which are not in compliance with these Specifications, or the approved Shop Drawings, either before or after installation at no expense to the Owner and equipment shall be replaced with approved equipment by the Contractor at no cost to the Owner.

2.26 Provide permanent equipment identifications as follows:

A. Provide on each panelboard, safety switch, etc. a 1 " x 3 " laminated phenolic nameplate to identify the equipment. Nameplates shall be engraved to show black letters on a white background. Nameplates–shall be fastened to the door with two self–tapping metal screws and shall be removable.

B. Each motor starter or disconnect switch shall have an individual nameplate indicating the destination of the circuit and motor being fed.

2.27 Provide Pulling Cord, 100–lbf– test nylon cord in any spare conduits.

PART 3 GROUNDING

3.1 Provide all materials and labor requisite to install an approved grounding system to an approved, adequate ground source, per NEC.

3.2 Ground all conduits, fixtures, receptacles, motors, panels and other exposed noncurrent carrying metal parts of electrical equipment in accordance with all provisions of the National Electrical Code.

3.3 Provide a ground wire in all feeder circuits.

3.4 Provide a ground wire in all new branch circuit conduits.

3.5 Where grounding conductors are subject to mechanical injury, they shall be installed in a rigid non–ferrous raceway.

3.6 Conductors for equipment grounding system shall be soft or medium hard drawn, stranded, bare copper, except where otherwise noted. All feeder and branch circuit conductors #8AWG and smaller shall be insulated, green in color.

3.7 Ground Rods: Copper–clad steel; 5/8–inch–diameter by 8 feet in length. Install to depth of 2'–0" below finish grade.

3.8 All connection of ground conductors to bus bars, structural members, pipes, and splices of ground conductors shall be made by exothermic welds, except where otherwise noted. All connections to bar lugs shall be exothermic weld or compression type. Bolted type connection of ground conductors may only be made where terminal lugs or blocks have been furnished and installed in equipment by the manufacturer. Exothermic welds shall be: Cadweld or Thermo–O–Weld.

END OF SECTION

ELECTRICAL SYMBOLS

SYMBOL	DESCRIPTION	MH	LEGEND NOTE
———	CONDUIT CONCEALED ABOVE CEILING OR IN WALL	–	
– – – –	CONDUIT CONCEALED IN OR BELOW FLOOR, OR UNDER GROUND	–	
—— —	BURIED GROUNDING CONDUCTOR	–	
AL1–1,3,5	TYPICAL HOME RUN INDICATES NUMBER OF CONDUCTORS IN CONDUIT TO BE USED AS A GENERAL GUIDE TO SHOW INTENT OF CIRCUITING AND SWITCHING ARRANGEMENT ...NOT SHOWN IN ALL CASES... CONTRACTOR SHALL VERIFY AND INSTALL ADDITIONAL CONDUCTOR WHERE REQUIRED PANEL AND CIRCUIT NO. DESIGNATION NOTED GROUND CONDUCTOR(S) NEUTRAL CONDUCTOR(S) PHASE CONDUCTOR(S)	–	A
WP	20 AMP GFCI TYPE DUPLEX RECEPTACLE, NEMA 5–20R WITH IN–USE TYPE WEATHERPROOF COVER HINGED AT TOP	48"	
HB	OCCUPANCY SENSOR – FIXTURE MOUNTED (UNO), HIGH BAY INFRARED, 360 DEGREE PATTERN	FIXTURE	
WP	SINGLE POLE SWITCH, 120/277V, 20A, FLUSH UNO, WITH WEATHERPROOF COVER.	44"	
	GROUND ROD		

ELECTRICAL SYMBOL LEGEND NOTES

A. CONTRACTOR SHALL NOT BE PERMITTED TO CONSOLIDATE INDIVIDUAL BRANCH CIRCUIT CONDUIT HOME RUNS EXCEPT AS FOLLOWS:
a: WHEN SHOWN ON DRAWINGS.
b: WITH PRIOR WRITTEN APPROVAL BY THE ENGINEER
c: FOR MULTIWIRE BRANCH CIRCUIT HOME RUNS PROVIDE 3#12 + 1#10 NEUTRAL AND 1#12 GROUND IN 3/4" MIN. CONDUIT. A HOME RUN SHALL CONSIST OF A MAX. OF 3 SEPARATE PHASE CONDUCTORS.

ELECTRICAL ABBREVIATIONS

ABBREVIATIONS USED ON THE CONTRACT DOCUMENTS, INCLUDE BUT ARE NOT LIMITED TO THOSE LISTED BELOW

#	NUMBER
1P	ONE POLE
2P	TWO POLE
3P	THREE POLE
4P	FOUR POLE
1P2W	ONE POLE, TWO WIRE
2P2W	TWO POLE, TWO WIRE
2P3W	TWO POLE, THREE WIRE
3P3W	THREE POLE, THREE WIRE
3P4W	THREE POLE, FOUR WIRE
A	AMPERE
AC	ALTERNATING CURRENT
AF	AMP FRAME
AFF	ABOVE FINISHED FLOOR
AFG	ABOVE FINISHED GRADE
AIC	AMPERE INTERRUPTING CAPACITY
AID	ADDRESSABLE INTERFACE DEVICE
AL	ALUMINUM
ARCH	ARCHITECT
AR	AS REQUIRED
AT	AMP TRIP
AWG	AMERICAN WIRE GAUGE
B	BLANK
BLDG	BUILDING
C	CONDUIT (GENERIC TERM FOR RACEWAY PROVIDE AS SPECIFIED)
CB	CIRCUIT BREAKER
CLG	CEILING MOUNTED
CAT	CATALOG
CKT	CIRCUIT
CL	LIGHTING CONTACTOR
COL	COLUMN
COORD	COORDINATE
Cu	COPPER
DWG	DRAWING
EBJ	EQUIPMENT BONDING JUMPER ON LOAD SIDE OF AN OVER–CURRENT DEVICE
EC	ELECTRICAL CONTRACTOR
ELEC	ELECTRICAL
EMT	ELECTRIC METALLIC TUBING
ETR	EXISTING TO REMAIN
EX	EXISTING
FBO	FURNISHED BY OTHERS
FDN	FOUNDATION
FIXT	FIXTURE
FLA	FULL LOAD AMPS
FMC	FLEXIBLE METALLIC TUBING
GND	GROUNDED
GEC	GROUNDED ELECTRODE CONDUCTOR
GFI	GROUND FAULT CIRCUIT INTERRUPTER
GFPE	GROUND FAULT PROTECTION EQUIPMENT
GRC	GALVANIZED RIGID CONDUIT
HZ	HERTZ (CYCLE) PER SECOND
IG	ISOLATED GROUND
IMC	INTERMEDIATE METAL CONDUIT
JB	JUNCTION BOX
KCMIL	THOUSAND CIRCULAR MILS
K/O	KNOCK–OUT
KVA	KILOVOLT AMPERE
KVAR	KILOVOLT AMPERE REACTIVE
KW	KILOWATT
KWH	KILOWATT HOUR
LFMC	LIQUIDTIGHT FLEXIBLE METALLIC CONDUIT
LFNC	LIQUIDTIGHT FLEXIBLE NONMETALLIC CONDUIT
LTG	LIGHTING
LV	LOW VOLTAGE
MBJ	MAIN BONDING JUMPER
MC	METAL CLAD CABLE
MCB	MAIN CIRCUIT BREAKER
MH	MOUNTING HEIGHT (ON PLAN), ALL MOUNTING HEIGHTS FOR DEVICE BOXES ARE FROM FINISHED FLOOR TO BOTTOM OF BOX, UNO. VERIFY OUTLET LOCATIONS WITH OTHER TRADES BEFORE ROUGH–IN
MISC	MISCELLANEOUS
MLO	MAIN LUGS ONLY
MTD	MOUNTED
MTG	MOUNTING
N	GROUNDED CIRCUIT CONDUCTOR (NEUTRAL)
+N	INDICATES MOUNTING HEIGHT (N) TO BOTTOM OF DEVICE FROM FINISH FLOOR, UNO
N/A	NOT APPLICABLE
NEC	NATIONAL ELECTRICAL CODE
NIC	NOT IN CONTRACT
NM	NONMETALLIC SHEATHED CABLE
NRTL	NATIONALLY RECOGNIZED TESTING LAB
NTS	NOT TO SCALE
OC	ON CENTER
P	POLE
PB	PULL BOX
PH or Ø	PHASE
PVC	POLYVINYL CHLORIDE CONDUIT
PWR	POWER
RECEPT	RECEPTACLE
RGS	RIGID GALVANIZED STEEL CONDUIT
RMC	RIGID METALLIC CONDUIT
RT	RAIN–TIGHT
S	SURFACE
SBJ	SYSTEM BONDING JUMPER
SEC	SECONDARY
SN	SOLID NEUTRAL
SP	SPARE
SPD	SURGE PROTECTIVE DEVICE
SPL	SPLICE
SPDT	SINGLE POLE DOUBLE THROW
SPST	SINGLE POLE SINGLE THROW
SS	STAINLESS STEEL
SSBJ	SUPPLY–SIDE BONDING JUMPER
STL	CARBON STEEL
SUSP	SUSPENDED
SW	SWITCH
TR	TAMPER RESISTANT
TYP	TYPICAL
UG	UNDERGROUND
UNO	UNLESS NOTED OTHERWISE
V	VOLT
VA	VOLT AMPERE
VIF	VERIFY IN FIELD
VT	VAPOR–TIGHT
W	WATT
WH	WATTHOUR
WM	WALL MOUNTED
WP	WEATHERPROOF
WT	WATER–TIGHT
XFMR	TRANSFORMER
Y	WYE

COPYRIGHT 2013 BY FANNING/HOWEY ASSOCIATES, INC.

STATE OF OHIO · RAND A. CULVAS · 45414 · REGISTERED PROFESSIONAL ENGINEER

STATE OF OHIO · TRAVIS L. VANTILBERG · #69676 · REGISTERED PROFESSIONAL ENGINEER

FLEET MAINTENANCE FACILITY EXPANSION
CITY OF DUBLIN, OHIO

FANNING/HOWEY
614.764.4661 www.fhai.com

ELECTRICAL SYMBOL LEGEND, ABBREVIATIONS AND SPECIFICATIONS

DRAWN BY: ER
CHECKED BY: RAG
COMM. NO.: 213052.00
DATE: July 31, 2013

REVISIONS NO. DATE
#1 08/30/2013

E1.1

MAINTENANCE FACILITY EXPANSION
213052.00

BUILDING LIGHTNING PROTECTION SYSTEMS

PART 1 – GENERAL

1.1 RELATED DOCUMENTS

A. Drawings and general provisions of the Contract, including General and Supplementary Conditions, apply to this Section.

1.2 SUMMARY

A. Furnish all labor, materials, equipment and incidentals required to provide lightning protection systems for the non–conductive frame type building with structure height under 75 feet as shown on the Drawings, specified or required.

B. Related Sections:
   1. Electrical Specifications for "Grounding".

1.3 REFERENCES

A. Refer to Electrical Specifications for additional requirements.

B. Reference Standards: Comply with applicable provisions and recommendations of the following except where otherwise shown or specified.
   1. NFPA 780, Standard for the Installation of Lightning Protection Systems.
   2. UL 96A, Installation Requirements for Lightning Protection Systems.
   3. UL 96, Lightning Protection Components.
   4. ANSI C5.1, Lightning Protection Code
   5. Lightning Protection Institute (LPI) Standard # 175.

1.4 DEFINITIONS (Not Used)

1.5 SYSTEM DESCRIPTION

A. Lightning protection system consists of a complete cable network on the roof of the storage building addition involving all air terminals, splices, and bonds with cable downleads routed exposed in conduit to ground, and ground rods all connected together as well as connected to the existing lightning protection system on the existing adjacent building (labeled on Drawings as Building #5) to provide a single/complete lightning protection system for the storage building addition and existing Building #5 in an approved manner and Certified by the LPI (Lighting Protection Institute) to provide a zone of protection to an entire building against lightning strikes. Refer to NFPA 780, Standard for the Installation of Lightning Protection Systems.

1.6 SUBMITTALS

A. Comply with Contract Documents "Submittal Procedures", and provide the following submittals:

B. Product Data:
   1. Submit for review copies of manufacturer's technical information including material specifications and dimensional data for each component proposed for use in the lightning protection systems.

C. Shop Drawings: Submit complete drawings showing the type, size and location for all equipment, grounds, cable routings, etc. for each building and the site, as applicable.

D. Quality Assurance/Control Submittals:
   1. UL Certification for the manufacturer, stating that manufacturer is UL listed, approved and a fully certified manufacturer member in good standing of the UL.
   2. Field Test Reports: Refer to paragraph 3.10.

E. Closeout Submittals: Provide the following documentation:
   1. The Contractor shall submit copies of as–built shop drawings with UL Forms to the Underwriter's Laboratories, Inc. to finalize the UL System Application.
   2. The lightning protection installer shall secure and deliver the UL Certification to the Owner upon completion of the system installation.

1.7 QUALITY ASSURANCE

A. The Contractor shall furnish a UL Master Label or Letter of Findings upon completion of the installation.

B. The system installation shall be made under the supervision of an LPI Certified Master Installer, and the LPI System Certification shall be delivered upon completion of the installation.

C. A pre–installation conference shall be convened. Minimum agenda shall include:
   1. Installation procedures.
   2. Equipment requirements.
   3. Quality Standards.
   4. Test Procedures.
   5. Coordination with other trades to ensure a correct and unobtrusive installation.

D. Qualifications:
   1. Manufacturer Qualifications:
      a. Manufacturer shall be experienced in manufacturing materials and equipment similar to that which is specified herein for at least five (5) years, with a record of successful in–service performance. When requested by the Owner, a list of installations in satisfactory operation shall be provided.
      b. The Lightning Protection System shall be the manufacturer's latest approved design.
      c. The equipment manufacturer shall be a UL listed and approved manufacturer.
   2. Field Installers: Refer to paragraph 3.1.

PART 2 – PRODUCTS

2.1 MANUFACTURERS

A. Manufacturers: Provide all components of the lightning protection systems from one of the following:
   1. Heary Brothers. Lightning Protection Co., Inc., Springville, NY. (www.hearybros.com)
   2. Thompson Lightning Protection Company, St. Paul, Minnesota. (www.tlpinc.com)
   3. Harger Lightning Protection, Inc., Libertyville, IL
   4. East Coast Lightning Equipment, Inc. (www.ecle.biz)
   5. ERICO, Inc. (www.erico.com)
   6. Harger, Inc. (www.harger.com)
   7. Independent Protection Company, Inc. (www.ipclp.com)
   8. Preferred Lightning Protection (www.preferredlp.com)
   9. Robbins Lightning, Inc. (www.robbinslightning.com)

2.2 MATERIALS

A. All materials shall be of the size, weight and construction to suit the application where used in accordance with UL and NFPA requirements for Class I structures (under 75 feet height) and as per manufacturer recommendations. Table SA–1 of UL 96A lists minimum sizes and weights for the material.

B. Lightning protection materials shall be coordinated with building construction materials to assure compatibility.

C. Aluminum conductors shall be of electrical grade aluminum. Aluminum lightning protection materials shall not be embedded in concrete or masonry, installed on or below copper surfaces, or used for the in–ground system.

D. Secondary conductors, which are used for bonding and interconnecting metallic bodies to the main conductor and which will not be required to carry the main lightning current, may be reduced in size, but shall be not less than No. 6 AWG. Main conductor size shall be used for interconnecting to metal water systems, steam or hot water heating systems, or other metallic masses having a low resistance to ground.

E. Strike termination devices shall be provided to place the entire structure under a zone of protection as defined by the Standards. Air terminals shall project a minimum of 10 inches above protected areas or object to be protected. Air terminals shall be located within 2 feet of exposed corners and roof edges. Refer to Drawings for locations of air terminals. Air terminals shall be solid, round copper bar of 3/8–inch minimum diameter.

F. Air terminal bases shall be of cast bronze with bolt pressure cable connections and shall be securely mounted with 316 stainless steel screws or bolts. Crimp type connectors are not acceptable. Bases on built–up tar and gravel roofs shall be secured with a proper adhesive and shall have a minimum surface contact area of 18.5 square inches.

G. Ground rods shall be in accordance with the requirements of the Electrical Specifications.

H. Cable fasteners shall be electrolytically compatible with the conductor and mounting surface and shall be spaced accordingly to UL and NFPA requirements.

I. Bonding devices, cable splicers and miscellaneous connectors shall be of cast bronze with bolt pressure connections to cable. Cast or stamped crimp fittings are not acceptable.

J. All miscellaneous bolts, nuts and screws shall be 316 stainless steel.

K. Where any conductors of the protection system are subject to physical damage, protect them by installing in PVC conduit. Refer to Electrical Specifications for requirements of PVC conduit.

L. Connectors and splicers shall be of suitable configuration and type for the intended application and of the same material as the conductors or of electrolytically compatible materials.

M. Ground terminations suitable for the soil and material conditions shall be provided for each downlead conductor.

N. Common interconnection of all grounded systems within the building shall be accomplished using main size conductors and fittings. Grounded metal bodies located within the calculated bonding distance as determined by the formulas of the Standards shall be bonded to the system using properly sized bonding conductors.

2.3 SOURCE QUALITY CONTROL

A. Certification Requirements: The lightning protection installation shall be certified by the Lightning Protection Institute.

B. All components of each entire lightning protection system shall be factory inspected, approved and properly labeled by Underwriter's Laboratories, Inc.

C. All equipment shall be new and the product of a single manufacturer.

PART 3 – EXECUTION

3.1 ACCEPTABLE INSTALLERS

A. The installation shall be accomplished by an experienced installer who is a Certified Master Installer or working under the direct supervision of a UL listed manufacturer or his authorized Master Installer Representative. The installing Contractor Company shall be listed with the Lightning Protection Institute, and Underwriters' Laboratories, Inc. The installation Contractor shall have personnel on staff Certified by the LPI as a "Master Installer" or "Master Installer / Designer of lightning protection systems". LPI qualified staff shall provide supervision of the installation to the Standards.

3.2 INSTALLATION

A. A pre–installation conference shall be convened. Refer to paragraph 1.7.C for minimum agenda.

B. Lightning Protection System:
   1. Each lightning protection system shall consist of a complete cable network on the roof involving all air terminals, splices and bonds with cable downleads routed exposed in conduit to ground.
   2. The lightning protection systems installation shall be coordinated with other trades to insure a correct, neat and unobtrusive installation.
   3. It shall be the responsibility of the lightning protection installer to assure interconnection with other building ground systems, including both telephone and electrical.

C. Downlead cables shall not be brought directly through the roof.

D. The Contractor shall furnish and install all necessary PVC conduit.

E. Copper equipment shall not be connected to aluminum surfaces except by means of a UL approved bimetal transition fitting. Lead coating shall not be accepted as a bimetal transition.

F. Separate ground rods meeting the requirements of the Electrical Specifications shall be installed for the lightning protection system, and #2/0 AWG bare copper stranded bonding jumper cable connected between them and the ground rods specified. Installation of bare copper bonding jumper cables and ground rods shall be in conformance with Electrical Specifications.

G. Install a continuous cable loop on the roof and bond to the downleads (100 foot maximum spacing) at their intersections with four–way bonding clamps.

H. Fasten roof cables to the roof at 36 inch centers.

I. Bond all metal pipes and roof mounted metal structures to the roof loop or to the downlead cables.

J. Bond the building steel framework to the downlead cables.

K. Install air terminals on the roof loops at equally spaced intervals not to exceed twenty feet.

L. Cable conductors shall provide a two–way path from strike termination devices horizontally and downward to connections with the ground system. Cable conductors shall be free of excessive splices and sharp bends. No bend of a conductor shall form a final included angle of less than 90 degrees nor have a radius of bend less than 8 inches. Structural elements and design features shall be used whenever possible to minimize the visual impact of exposed conductors.

M. Cable down conductors shall be enclosed within PVC conduit from the edge of the roof down to grade level. Down conductors shall be spaced at intervals averaging not more than 100 feet around the protected perimeter of the structure. In no case shall any structure have fewer than two down conductors. Refer to Drawings for locations on down conductors. Where down conductors are exposed to environmental hazards at grade level, guards shall be used to protect the conductor to a point 6 feet above grade.

N. Exposed cable conductors shall be secured to the structure at intervals not exceeding 3 feet – 0 inches. Fasteners, nails, screws, or bolts shall be of suitable configuration for the intended application and of the same material as the conductor or of electrolytically compatible materials. Galvanized or plated steels are not acceptable.

O. The existing structure of Building #5 has a lightning protection system. The Contractor shall advise the Owner of any additional work required on the existing system to bring it into compliance with current Standards and thus qualify for UL and LPI. The new lightning protection system shall be connected to this existing lightning protection system to provide a single/complete lightning protection system for the storage building addition and existing Building #5 in an approved manner. The entire lightning protection system shall be Certified by the LPI (Lighting Protection Institute) to provide a zone of protection to an entire building against lightning strikes.

3.3 FIELD QUALITY CONTROL

A. Notify the Owner at least 24 hours in advance of installation of any lightning protection systems.

B. Site Tests:
   1. Test the complete system for continuity and for resistance to ground and verify that the resistance to ground from the farthest point in the system is 5 ohms or less.
   2. The Contractor shall supply all necessary test equipment.

C. Inspection:
   1. The Contractor shall inspect the system for proper installation and shall provide inspection report required by LPI for certification purposes which shall be completed by the installing Contractor and signed by the Owner. LPI certification requires a signature by a representative of the Owner at three stages of installation – the in–ground system, the concealed portion of the work, and the exposed or roof level section. UL certification requires inspection by their third–party field staff after completion of the installation. Upon completion of the lightning protection installation, the installing Contractor shall provide to the Owner an as–built drawing of the system, along with copies of the UL and LPI Certificates of completion.

D. Inspection and testing to be performed by personnel regularly engaged in the installation and testing of Master Labeled lightning protection system.

E. Install a plate at the main entrance to the building on an exterior wall surface at a location designated by the Owner. Plate shall be 316 stainless steel hardware indicating "Master Label, Lightning Protection Institute Certified System".

END OF SECTION

COPYRIGHT 2013 BY FANNING/HOWEY ASSOCIATES, INC.

STATE OF OHIO RAND A. QUIVAS 45414 REGISTERED PROFESSIONAL ENGINEER

STATE OF OHIO TARYN L. TANTERBERG #69676 REGISTERED PROFESSIONAL ENGINEER

FLEET MAINTENANCE FACILITY EXPANSION
CITY OF DUBLIN, OHIO

FANNING/HOWEY
614.764.4661 www.fhai.com

LIGHTNING PROTECTION SYSTEM SPECIFICATIONS

DRAWN BY: ER
CHECKED BY: RAG
COMM. NO.: 213052.00
DATE: July 31, 2013

REVISIONS NO. DATE
#1 08/30/2013

E1.2

MAINTENANCE FACILTY EXPANSION
213052.00

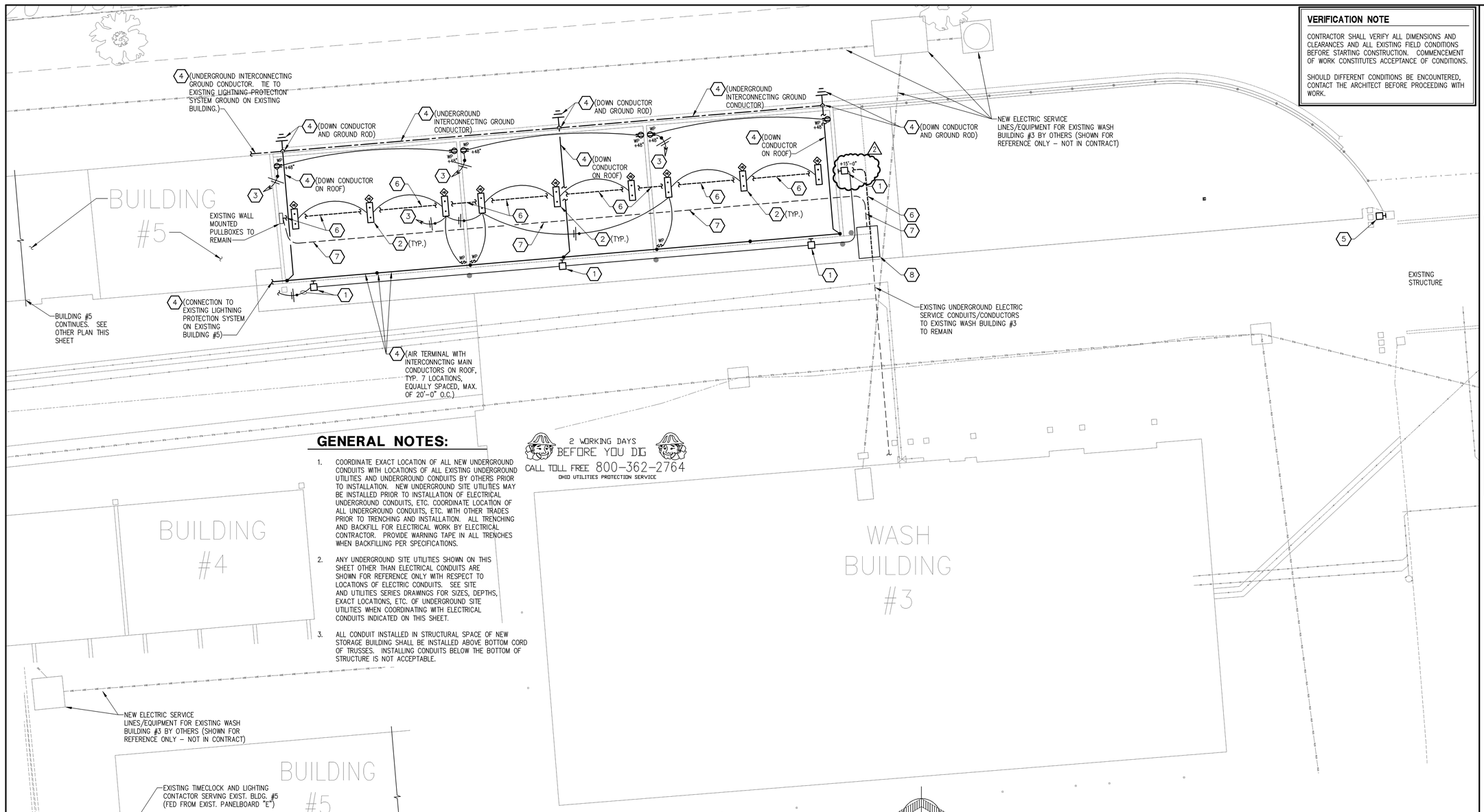

EXISTING BUILDING #5 - WEST
ELECTRICAL REFERENCE PLAN

1"=10'-0"

GENERAL NOTES:

1. COORDINATE EXACT LOCATION OF ALL NEW UNDERGROUND CONDUITS WITH LOCATIONS OF ALL EXISTING UNDERGROUND UTILITIES AND UNDERGROUND CONDUITS BY OTHERS PRIOR TO INSTALLATION. NEW UNDERGROUND SITE UTILITIES MAY BE INSTALLED PRIOR TO INSTALLATION OF ELECTRICAL UNDERGROUND CONDUITS, ETC. COORDINATE LOCATION OF ALL UNDERGROUND CONDUITS, ETC. WITH OTHER TRADES PRIOR TO TRENCHING AND INSTALLATION. ALL TRENCHING AND BACKFILL FOR ELECTRICAL WORK BY ELECTRICAL CONTRACTOR. PROVIDE WARNING TAPE IN ALL TRENCHES WHEN BACKFILLING PER SPECIFICATIONS.
2. ANY UNDERGROUND SITE UTILITIES SHOWN ON THIS SHEET OTHER THAN ELECTRICAL CONDUITS ARE SHOWN FOR REFERENCE ONLY WITH RESPECT TO LOCATIONS OF ELECTRIC CONDUITS. SEE SITE AND UTILITIES SERIES DRAWINGS FOR SIZES, DEPTHS, EXACT LOCATIONS, ETC. OF UNDERGROUND SITE UTILITIES WHEN COORDINATING WITH ELECTRICAL CONDUITS INDICATED ON THIS SHEET.
3. ALL CONDUIT INSTALLED IN STRUCTURAL SPACE OF NEW STORAGE BUILDING SHALL BE INSTALLED ABOVE BOTTOM CORD OF TRUSSES. INSTALLING CONDUITS BELOW THE BOTTOM OF STRUCTURE IS NOT ACCEPTABLE.

2 WORKING DAYS BEFORE YOU DIG
CALL TOLL FREE 800-362-2764
OHIO UTILITIES PROTECTION SERVICE

ELECTRICAL PLAN

1"=10'-0"

PLAN NOTES:

1. PROVIDE A NEW SURFACE MOUNT LED WALLPACK LIGHT FIXTURE AT SAME MOUNTING HEIGHT AS FIXTURES ON ADJACENT BUILDING #5 (U.N.O.) AND CONNECT TO EXISTING CIRCUIT AND CONTROLS SERVING EXISTING EXTERIOR BUILDING MOUNTED LIGHTING ON ADJACENT BUILDING #5. ALL CONDUIT SHALL BE CONCEALED INSIDE OF STRUCTURE. PROVIDE A FULL CUT-OFF LED WALLPACK FIXTURE, 4000K LEDs, 4,613 LUMEN OUTPUT (MIN.), FORWARD THROW DISTRIBUTION, UNIVERSAL VOLTAGE 530 mA DRIVER, DARK BRONZE FIXTURE COLOR. LIGHT FIXTURE SHALL BE: LITHONIA CSXW LED-1-30B530/40K-FT-MVOLT-DDBXD (OR ENGINEER APPROVED EQUAL).
2. PROVIDE A SUSPENDED LED HIGH BAY TYPE LIGHT FIXTURE AND MOUNT SO THAT BOTTOM OF LIGHT FIXTURE IS 4 INCHES ABOVE THE BOTTOM OF THE TRUSSES. PROVIDE A 16"x4' LED TYPE LIGHT FIXTURE WITH SOLID TOP, SILVER PAINTED STEEL BODY, 4000K LEDs, 12,000 LUMEN OUTPUT, WIDE DISTRIBUTION, MVOLT DRIVER, OPTIONAL FIXTURE MOUNTED 360 DEGREE PIR TYPE OCCUPANCY SENSOR AND OPTIONAL 10' AIRCRAFT CABLE HANGERS. WIRE SO THAT SENSOR CONTROLS ALL LIGHT FIXTURES ON SWITCHLEG. COORDINATE FINAL LOCATION WITH STRUCTURE SPACING PRIOR TO ROUGH-IN. LIGHT FIXTURE SHALL BE: LITHONIA IBL-12L-WD-MVOLT-LP740-MSI360-IBAC120M20 (OR ENGINEER APPROVED EQUAL).
3. RUN 2#8, 1#10, 3/4"C. TO EXISTING PANELBOARD "D" IN ADJACENT EXISTING BUILDING #5 AND PROVIDE A NEW 20A-1P CIRCUIT BREAKER IN EXISTING SPACE TO CONNECT CIRCUIT FOR EACH NEW CIRCUIT INDICATED. PROVIDE CIRCUIT BREAKER TO MATCH EXISTING PANELBOARD BREAKER TYPE AND AIC RATING. PROVIDE ANY REQUIRED MOUNTING HARDWARE TO INSTALL CIRCUIT BREAKER IN PANELBOARD. UPDATE EXISTING PANELBOARD CIRCUIT INDEX ACCORDINGLY.
4. PROVIDE ALL LABOR AND MATERIAL TO PROVIDE A COMPLETE UL AND LIGHTNING PROTECTION INSTITUTE (LPI) LISTED, CERTIFIED AND LABELED LIGHTNING PROTECTION SYSTEM CONSISTING OF, BUT NOT LIMITED TO: AIR TERMINALS LOCATED AT ROOF PEAK, MAIN CONDUCTORS BETWEEN AIR TERMINALS, DOWN LEADER CONDUCTORS, 8'x5/8" GROUND RODS WITH #2/0 CU INTERCONNECTING UNDERGROUND GROUNDING CONDUCTORS AND ALL REQUIRED FITTINGS/CONNECTORS AND CONNECTION TO EXISTING LIGHTNING PROTECTION SYSTEM ON EXISTING BUILDING #5. ALL ROOFTOP CONDUCTORS TO BE INSTALLED IN AN EXPOSED MANNER. DOWN CONDUCTORS FROM ROOF EDGE TO GRADE TO BE INSTALLED IN PVC SCHEDULE 40 CONDUIT. REFER TO LIGHTNING PROTECTION SYSTEM SPECIFICATIONS ON SHEET E1.2 FOR ADDITIONAL REQUIREMENTS. INSTALL LIGHTNING PROTECTION SYSTEM TO COMPLY WITH ALL APPLICABLE CODE REQUIREMENTS OF NFPA 780 "STANDARD FOR THE INSTALLATION OF LIGHTNING PROTECTION SYSTEMS" AND ALL OTHER APPLICABLE CODES. COORDINATE INSTALLATION WITH STRUCTURAL PLANS AND GENERAL TRADES CONTRACTOR PRIOR TO INSTALLATION.
5. PROVIDE A NEW SURFACE MOUNT LED WALLPACK LIGHT FIXTURE ON COLUMN OF EXISTING STRUCTURE AND MOUNT NEAR TOP OF COLUMN, JUST BELOW ROOF OF STRUCTURE. PROVIDE NEW CONDUIT, WIRING, W.P. BOXES, AND ALL APPURTENANCES TO INTERCEPT AND CONNECT TO EXISTING CIRCUIT SERVING EXISTING LIGHTING ON STRUCTURE. PROVIDE A RECTANGULAR SHAPED LED WALLPACK FIXTURE, GLASS REFLECTOR, 5000K LEDs, MIN. 6,979 LUMEN OUTPUT, TYPE 4 DISTRIBUTION, UNIVERSAL VOLTAGE DRIVER, DARK BRONZE FIXTURE COLOR. LIGHT FIXTURE SHALL BE: LITHONIA TWR2-LED-1-50K-MVOLT-DDB (OR ENGINEER APPROVED EQUAL).
6. FOUR (4) 4" EXISTING UNDERGROUND ELECTRIC SERVICE CONDUITS/CONDUCTORS RUNNING FROM EXISTING WALL MOUNTED PULLBOXES ON THE EAST SIDE OF EXISTING BUILDING #5 TO POINT NEAR EAST END OF NEW STORAGE BUILDING FOOTPRINT WHERE EXISTING CONDUITS TURN SOUTH TO ROUTE TO EXISTING WASH BUILDING #3 TO BE REMOVED AND REWORKED/REPLACED PER PLAN NOTE NO. 7 TO ALLOW FOR CONSTRUCTION OF NEW STORAGE BUILDING. LOCATE CONDUITS PRIOR TO EXCAVATION FOR GRADING AND FOOTERS FOR NEW BUILDING AND COORDINATE LOCATION WITH CONTRACTOR PERFORMING EXCAVATION. PROTECT AND TEMPORARILY SUPPORT CONDUITS DURING EXCAVATION FOR GRADING AND FOOTERS TO MAINTAIN ELECTRIC SERVICE CONTINUITY UNTIL NEW/REPLACEMENT UNDERGROUND PATHWAYS (NEW CONDUITS AND PULLBOX INDICATED ON THIS SHEET) ARE IN PLACE. ONCE NEW UNDERGROUND PATHWAYS ARE IN PLACE, REMOVE THE EXISTING CONDUCTORS AND CONDUITS.
7. REPLACE CONDUITS/CONDUCTORS INDICATED IN PLAN NOTE NO. 6 WITH FOUR (4) 4" SCHEDULE 40 PVC CONDUITS AND TWO RUNS OF 4 #350kcmil, 1 #3/0 GROUND IN TWO OF THE CONDUITS AND PULL ROPE IN THE OTHER TWO CONDUITS. INSTALL CONDUITS AT 4'-0" BELOW FINAL FINISH GRADE ELEVATION. REWORK CONDUITS AS REQUIRED AT EAST END OF EXISTING BUILDING #5 AND AT NEW IN-GRADE PULLBOX INDICATED BY PLAN NOTE NO. 8 AND SPLICE EXISTING CONDUCTORS TO NEW CONDUCTORS IN EXISTING WALL MOUNTED PULLBOX AND NEW IN-GRADE PULLBOX AS REQUIRED. ALL SPLICES SHALL BE WEATHERPROOF. LOCATION OF NEW CONDUIT INDICATED IS APPROXIMATE. FIELD COORDINATE FINAL ROUTING. SWITCHOVER FROM EXISTING TO NEW/REPLACEMENT ELECTRIC SERVICE CONDUCTORS SHALL BE COORDINATED/SCHEDULED SO THAT THERE IS A SERVICE INTERRUPTION OF A MAXIMUM OF ONE (1) BUSINESS DAY. COORDINATE SCHEDULE FOR SWITCHOVER WITH THE OWNER.
8. PROVIDE A 48"x72"x48"DP. IN-GRADE PULLBOX NEAR EAST END OF NEW STORAGE BUILDING FOOTPRINT TO INTERCEPT AND SPLICE EXISTING CONDUITS/CONDUCTORS TO NEW CONDUITS/CONDUCTORS. PULLBOX SHALL BE A QUAZITE MODEL NO. PG4872BA48 WITH PG4872HA0017 COVER (TIER 15 HEAVY DUTY COVER WITH "ELECTRIC" LOGO), OR ENGINEER APPROVED EQUAL. LOCATION OF NEW PULLBOX INDICATED IS APPROXIMATE. FIELD COORDINATE FINAL LOCATION. IF NEW PULLBOX IS LOCATED IN EXISTING ASPHALT AREA, PROVIDE CUTTING AND PATCHING OF EXISTING ASPHALT AS REQUIRED. INSTALL PULLBOX PER ELECTRICAL SPECIFICATIONS ON SHEET E1.1.

VERIFICATION NOTE

CONTRACTOR SHALL VERIFY ALL DIMENSIONS AND CLEARANCES AND ALL EXISTING FIELD CONDITIONS BEFORE STARTING CONSTRUCTION. COMMENCEMENT OF WORK CONSTITUTES ACCEPTANCE OF CONDITIONS.

SHOULD DIFFERENT CONDITIONS BE ENCOUNTERED, CONTACT THE ARCHITECT BEFORE PROCEEDING WITH WORK.

COPYRIGHT 2013 BY FANNING/HOWEY ASSOCIATES, INC.

STATE OF OHIO · RAND A. CULVAS · 45414 · REGISTERED PROFESSIONAL ENGINEER

STATE OF OHIO · TRAVIS L. VANTIENBERG · #69676 · REGISTERED PROFESSIONAL ENGINEER

FLEET MAINTENANCE FACILITY EXPANSION
CITY OF DUBLIN, OHIO

FANNING/HOWEY
614.764.4661 www.fhai.com

ELECTRICAL PLAN

DRAWN BY: ER
CHECKED BY: RAG
COMM. NO.: 213052.00
DATE: July 31, 2013

REVISIONS NO.	DATE
1	11/04/2013

E2.1

MAINTENANCE FACILTY EXPANSION
213052.00