SureSite

Infrastructure Development Servic

September 19, 2013

City of Dublin
Land Use and Long Range Planning
C/O Rachel Ray
5800 Shier Rings Road
Dublin Ohio 43016-1236
640-410-4600

RE: Application for Cellular Tower Modification
Site: CB33XC096
Address: 7030 Coffman Rd Dublin, OH 43017

Ms. Ray:

Please find the building permit application, required fees, two (2)copies of structural analysis , and two (10) drawings as they relate to the proposed modifications at the above referenced addresses. Once you have reviewed, please advise if you need any further information and kindly provide a receipt for fees paid.

Please do not hesitate to contact me should you need any additional information or clarification by email at s.ryan@sure-site.com or at 412-302-8488. If I am unavailable Sarah Denney can answers questions related to this application.

Sincerely,

Sean Ryan | project manager
SureSite Consulting Group, LLC
Mobile 412-302-8488 | F (216) 593.0401
E s.ryan@sure-site.com
www.sure-site.com

FILE COPY

RECEIVED
13-102 ARTW
SEP 23 2013
CITY OF DUBLIN
PLANNING

Date: **November 10, 2012**

Melanie Maina
Crown Castle
10170 Linn Station Road, Suite 525
Louisville, KY 40223

Crown Castle
2000 Corporate Drive
Canonsburg, PA 15317
(724) 416-2000

Subject: **Structural Analysis Report**

Carrier Designation:	***Sprint PCS* Co-Locate – Interim Load**	
	Carrier Site Number:	CB33XC096
	Carrier Site Name:	COFFMAN HIGH SCHOOL
Crown Castle Designation:	**Crown Castle BU Number:**	875358
	Crown Castle Site Name:	COFFMAN HIGH SCHOOL
	Crown Castle JDE Job Number:	193502
	Crown Castle Work Order Number:	545761
	Crown Castle Application Number:	167727 Rev. 1
Engineering Firm Designation:	**Crown Castle Project Number:**	545761
Site Data:	**6780 Coffman Road, Dublin, Franklin County, OH** **Latitude *40° 6' 35.39"*, Longitude *-83° 7' 41.04"*** **140 Foot - Monopole Tower**	

Dear Melanie Maina,

Crown Castle is pleased to submit this **"Structural Analysis Report"** to determine the structural integrity of the above mentioned tower. This analysis has been performed in accordance with the Crown Castle Structural 'Statement of Work' and the terms of Crown Castle Purchase Order Number 545761, in accordance with application 167727, revision 1.

The purpose of the analysis is to determine acceptability of the tower stress level. Based on our analysis we have determined the tower stress level for the structure and foundation, under the following load case, to be:

LC5: Existing + Proposed Equipment **Sufficient Capacity**
Note: See Table I and Table II for the proposed and existing loading, respectively.

The analysis has been performed in accordance with the TIA-222-G standard and local code requirements based upon a wind speed of 90 mph 3-second gust, exposure category C.

All modifications and equipment proposed in this report shall be installed in accordance with the attached drawings for the determined available structural capacity to be effective.

We at *Crown Castle* appreciate the opportunity of providing our continuing professional services to you and Crown Castle. If you have any questions or need further assistance on this or any other projects please give us a call.

Structural analysis prepared by: Manoj Pai M. / John Kazmierczak, E.I.T.

Respectfully submitted by:

Jamal A. Huwel, P.E.
Manager Engineering

FILE COPY

RECEIVED
13-102AGOW
SEP 23 2013
CITY OF DUBLIN
PLANNING

STATE OF OHIO
JAMAL A. HUWEL
E-76490
REGISTERED
PROFESSIONAL ENGINEER
DATE NOV 10 2012
SIGNED

tnxTower Report - version 6.0.4.0

TABLE OF CONTENTS

1) INTRODUCTION

2) ANALYSIS CRITERIA
- Table 1 - Proposed Antenna and Cable Information
- Table 2 - Existing Antenna and Cable Information
- Table 3 - Design Antenna and Cable Information

3) ANALYSIS PROCEDURE
- Table 4 - Documents Provided
- 3.1) Analysis Method
- 3.2) Assumptions

4) ANALYSIS RESULTS
- Table 5 - Section Capacity (Summary)
- Table 6 – Tower Components vs. Capacity
- 4.1) Recommendations

5) APPENDIX A
- tnxTower Output

6) APPENDIX B
- Base Level Drawing

7) APPENDIX C
- Additional Calculations

RECEIVED
13-105ARTW
SEP 23 2013
CITY OF DUBLIN
PLANNING

1) INTRODUCTION

This tower is a 140 ft Monopole tower designed by Summit Manufacturing, LLC in December of 1999. The tower was originally designed for a wind speed of 85 mph per the Ohio Basic Building Code 1999.

2) ANALYSIS CRITERIA

The structural analysis was performed for this tower in accordance with the requirements of TIA-222-G Structural Standards for Steel Antenna Towers and Antenna Supporting Structures using a 3-second gust wind speed of 90 mph with no ice, 40 mph with 0.75 inch ice thickness and 60 mph under service loads, exposure category C with topographic category 1 and crest height of 0 feet.

Table 1 - Proposed Antenna and Cable Information

Mounting Level (ft)	Center Line Elevation (ft)	Number of Antennas	Antenna Manufacturer	Antenna Model	Number of Feed Lines	Feed Line Size (in)	Note
120	123	3	kmw communications	ET-X-TS-70-15-62-18-iR-RD w/ Mount Pipe	3	1-5/8	-
		3	samsung telecommunications	RRH-C2A w/EXT FILTER			
		3	samsung telecommunications	RRH-P4			
	120	1	tower mounts	Miscellaneous [NA 507-1]			

Table 2 - Existing Antenna and Cable Information

Mounting Level (ft)	Center Line Elevation (ft)	Number of Antennas	Antenna Manufacturer	Antenna Model	Number of Feed Lines	Feed Line Size (in)	Note
140	148	1	rfs celwave	PD1151-5	1	7/8	1
134	134	1	north star lighting	STARBEAM-6	1	2	1
120	123	6	kathrein	742-215 w/ Mount Pipe	6	1-5/8	1
	120	1	tower mounts	Platform Mount [LP 714-1]			
100	109	1	decibel	ASP-705	2	7/8	1
	103	1	sinclair	SD314-H			
	100	1	tower mounts	Side Arm Mount [SO 702-4]			
88	89	3	ems wireless	RR65-18-02DPL2 w/ Mount Pipe	6	1-5/8	2
	88	1	tower mounts	Platform Mount [LP 714-1]			

Notes:
1) Existing Equipment
2) Abandoned Equipment; considered in this analysis

RECEIVED
13-1004RTW
SEP 23 2013
CITY OF DUBLIN
PLANNING

Table 3 - Design Antenna and Cable Information

Mounting Level (ft)	Center Line Elevation (ft)	Number of Antennas	Antenna Manufacturer	Antenna Model	Number of Feed Lines	Feed Line Size (in)
140	140	1	generic	ASP-705	-	-
135	135	9	generic	Stadium Lights	-	-
130	130	12	swedcom	ALP-9212-N	-	-
120	120	9	rfs celwave	AP-199016	-	-
100	100	2	generic	ASP-700	-	-
80	80	12	swedcom	ALP-9212-N	-	-

3) ANALYSIS PROCEDURE

Table 4 - Documents Provided

Document	Remarks	Reference	Source
4-GEOTECHNICAL REPORTS	G2 Consulting Group	1519245	CCISITES
4-TOWER FOUNDATION DRAWINGS/DESIGN/SPECS	G2 Consulting Group	1433802	CCISITES
4-TOWER MANUFACTURER DRAWINGS	Summit Manufacturing, LLC / Paul J. Ford and Company	1610756	CCISITES

3.1) Analysis Method

tnxTower (version 6.0.4.0), a commercially available analysis software package, was used to create a three-dimensional model of the tower and calculate member stresses for various loading cases. Selected output from the analysis is included in Appendix A.

3.2) Assumptions

1) Tower and structures were built in accordance with the manufacturer's specifications.
2) The tower and structures have been maintained in accordance with the manufacturer's specification.
3) The configuration of antennas, transmission cables, mounts and other appurtenances are as specified in Tables 1 and 2 and the referenced drawings.

This analysis may be affected if any assumptions are not valid or have been made in error. Crown Castle should be notified to determine the effect on the structural integrity of the tower.

RECEIVED
13-102ARTW
SEP 23 2013
CITY OF DUBLIN
PLANNING

4) ANALYSIS RESULTS

Table 5 - Section Capacity (Summary)

Section No.	Elevation (ft)	Component Type	Size	Critical Element	P (K)	SF*P_allow (K)	% Capacity	Pass / Fail
L1	140 - 91.75	Pole	TP29.239x22x0.25	1	-7.955	1509.920	37.0	Pass
L2	91.75 - 45.5	Pole	TP35.678x28.176x0.313	2	-17.466	2486.200	58.6	Pass
L3	45.5 - 0	Pole	TP41.88x34.378x0.375	3	-29.223	3572.550	65.4	Pass
							Summary	
						Pole (L3)	65.4	Pass
						Rating =	65.4	Pass

Table 6 - Tower Component Stresses vs. Capacity – LC5

Notes	Component	Elevation (ft)	% Capacity	Pass / Fail
1	Anchor Rods	0	65.3	Pass
1	Base Plate	0	50.4	Pass
1	Base Foundation	0	39.1	Pass

Structure Rating (max from all components) =	**65.4%**

Notes:
1) See additional documentation in "Appendix C – Additional Calculations" for calculations supporting the % capacity consumed.

4.1) Recommendations

The tower and its foundation have sufficient capacity to carry the existing and proposed loads. No modifications are required at this time.

RECEIVED
13-1023ATW
SEP 23 2013
CITY OF DUBLIN
PLANNING

APPENDIX A

TNXTOWER OUTPUT

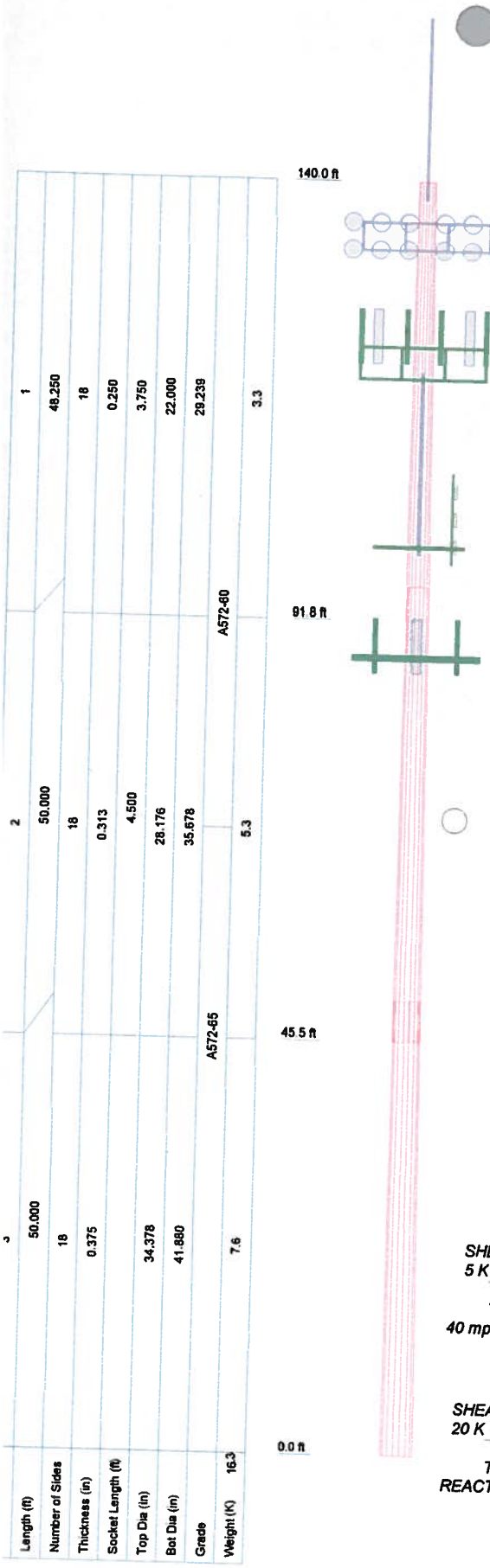

DESIGNED APPURTENANCE LOADING

TYPE	ELEVATION	TYPE	ELEVATION
PD1151-5	140	ET-X-TS-70-15-62-18-iR-RD w/ Mount Pipe	120
4' x 2" Pipe Mount	140	RRH-P4	120
Sector Mount [SM 514-1]	134	RRH-P4	120
STARBEAM	134	RRH-P4	120
STARBEAM	134	RRH-C2A w/EXT FILTER	120
STARBEAM	134	RRH-C2A w/EXT FILTER	120
STARBEAM	134	RRH-C2A w/EXT FILTER	120
STARBEAM	134	ASP-705	100
STARBEAM	134	SD314-H	100
STARBEAM	134	4' x 2" Pipe Mount	100
STARBEAM	134	4' x 2" Pipe Mount	100
STARBEAM	134	4' x 2" Pipe Mount	100
STARBEAM	134	4' x 2" Pipe Mount	100
STARBEAM	134	Side Arm Mount [SO 702-4]	100
Miscellaneous [NA 507-1]	120	Platform Mount [LP 714-1]	88
Platform Mount [LP 714-1]	120	(2) 6' x 2" Mount Pipe	88
(2) 742-215 w/ Mount Pipe	120	RR65-18-02DPL2 w/ Mount Pipe	88
(2) 742-215 w/ Mount Pipe	120	RR65-18-02DPL2 w/ Mount Pipe	88
(2) 742-215 w/ Mount Pipe	120	RR65-18-02DPL2 w/ Mount Pipe	88
ET-X-TS-70-15-62-18-iR-RD w/ Mount Pipe	120	(2) 6' x 2" Mount Pipe	88
ET-X-TS-70-15-62-18-iR-RD w/ Mount Pipe	120	(2) 6' x 2" Mount Pipe	88

MATERIAL STRENGTH

GRADE	Fy	Fu	GRADE	Fy	Fu
A572-60	60 ksi	75 ksi	A572-65	65 ksi	80 ksi

TOWER DESIGN NOTES

1. Tower is located in Franklin County, Ohio.
2. Tower designed for Exposure C to the TIA-222-G Standard.
3. Tower designed for a 90 mph basic wind in accordance with the TIA-222-G Standard.
4. Tower is also designed for a 40 mph basic wind with 0.75 in ice. Ice is considered to increase in thickness with height.
5. Deflections are based upon a 60 mph wind.
6. Tower Structure Class II.
7. Topographic Category 1 with Crest Height of 0.000 ft
8. TOWER RATING: 65.4%

ALL REACTIONS ARE FACTORED

AXIAL 50 K

SHEAR 5 K — *MOMENT 465 kip-ft*

TORQUE 2 kip-ft
40 mph WIND - 0.750 in ICE

AXIAL 29 K

SHEAR 20 K — *MOMENT 1967 kip-ft*

TORQUE 7 kip-ft
REACTIONS - 90 mph WIND

CROWN CASTLE
We Are Solutions
Crown Castle
2000 Corporate Drive
Canonsburg, PA 15317
Phone: (724) 416-2000
FAX: (724) 416-2254

Job: BU #875358			
Project:			
Client: Crown Castle	Drawn by: JKazmierczak	App'd:	
Code: TIA-222-G	Date: 11/09/12	Scale: NTS	
Path: R:\SA Models - Letters\Work Area\JKazmierczak\875358\QA\rfsrtm\875358.er		Dwg No. E-1	

Tower Input Data

There is a pole section.
This tower is designed using the TIA-222-G standard.
The following design criteria apply:

3) Tower is located in Franklin County, Ohio.
4) Basic wind speed of 90 mph.
5) Structure Class II.
6) Exposure Category C.
7) Topographic Category 1.
8) Crest Height 0.000 ft.
9) Nominal ice thickness of 0.750 in.
10) Ice thickness is considered to increase with height.
11) Ice density of 56.000 pcf.
12) A wind speed of 40 mph is used in combination with ice.
13) Temperature drop of 50.000 °F.
14) Deflections calculated using a wind speed of 60 mph.
15) A non-linear (P-delta) analysis was used.
16) Pressures are calculated at each section.
17) Stress ratio used in pole design is 1.
18) Local bending stresses due to climbing loads, feedline supports, and appurtenance mounts are not considered.

Options

Consider Moments - Legs
Consider Moments - Horizontals
Consider Moments - Diagonals
Use Moment Magnification
√ Use Code Stress Ratios
√ Use Code Safety Factors - Guys
Escalate Ice
Always Use Max Kz
Use Special Wind Profile
Include Bolts In Member Capacity
Leg Bolts Are At Top Of Section
Secondary Horizontal Braces Leg
Use Diamond Inner Bracing (4 Sided)
Add IBC .6D+W Combination

Distribute Leg Loads As Uniform
Assume Legs Pinned
√ Assume Rigid Index Plate
√ Use Clear Spans For Wind Area
Use Clear Spans For KL/r
Retension Guys To Initial Tension
√ Bypass Mast Stability Checks
√ Use Azimuth Dish Coefficients
√ Project Wind Area of Appurt.
Autocalc Torque Arm Areas
SR Members Have Cut Ends
Sort Capacity Reports By Component
Triangulate Diamond Inner Bracing

Treat Feedline Bundles As Cylinder
Use ASCE 10 X-Brace Ly Rules
Calculate Redundant Bracing Forces
Ignore Redundant Members in FEA
SR Leg Bolts Resist Compression
All Leg Panels Have Same Allowable
Offset Girt At Foundation
√ Consider Feedline Torque
Include Angle Block Shear Check
Poles
√ Include Shear-Torsion Interaction
Always Use Sub-Critical Flow
Use Top Mounted Sockets

Tapered Pole Section Geometry

Section	Elevation ft	Section Length ft	Splice Length ft	Number of Sides	Top Diameter in	Bottom Diameter in	Wall Thickness in	Bend Radius in	Pole Grade
L1	140.000-91.750	48.250	3.750	18	22.000	29.239	0.250	1.000	A572-60 (60 ksi)
L2	91.750-45.500	50.000	4.500	18	28.176	35.678	0.313	1.250	A572-65 (65 ksi)
L3	45.500-0.000	50.000		18	34.378	41.880	0.375	1.500	A572-65 (65 ksi)

Tapered Pole Properties

Section	Tip Dia. in	Area in^2	I in^4	r in	C in	I/C in^3	J in^4	It/Q in^2	w in	w/t
L1	22.339	17.259	1031.483	7.721	11.176	92.294	2064.324	8.631	3.432	13.728
	29.690	23.003	2442.216	10.291	14.853	164.421	4887.646	11.504	4.706	18.824
L2	29.182	27.637	2710.936	9.892	14.314	189.396	5425.440	13.821	4.409	14.109
	36.228	35.078	5542.859	12.555	18.124	305.823	11093.011	17.542	5.729	18.334
L3	35.594	40.472	5911.827	12.071	17.464	338.516	11831.434	20.240	5.391	14.375
	42.526	49.401	10751.694	14.734	21.275	505.367	21517.535	24.705	6.711	17.896

Tower Elevation ft	Gusset Area (per face) ft^2	Gusset Thickness in	Gusset Grade	Adjust. Factor A_f	Adjust. Factor A_r	Weight Mult.	Double Angle Stitch Bolt Spacing Diagonals in	Double Angle Stitch Bolt Spacing Horizontals in
L1 140.000-91.750				1	1	1		
L2 91.750-45.500				1	1	1		
L3 45.500-0.000				1	1	1		

Feed Line/Linear Appurtenances - Entered As Round Or Flat

Description	Sector	Component Type	Placement ft	Total Number	Number Per Row	Start/End Position	Width or Diameter in	Perimeter in	Weight klf
TYPE 7(1 5/8") ***	A	Surface Ar (CaAa)	120.000 - 0.000	3	3	0.100 0.200	1.690		0.002

Feed Line/Linear Appurtenances - Entered As Area

Description	Face or Leg	Allow Shield	Component Type	Placement ft	Total Number		C_AA_A ft^2/ft	Weight klf
LDF5-50A(7/8") ***	A	No	Inside Pole	140.000 - 0.000	1	No Ice	0.000	0.000
						1/2" Ice	0.000	0.000
						1" Ice	0.000	0.000
WC166(2") ***	C	No	Inside Pole	134.000 - 0.000	1	No Ice	0.000	0.003
						1/2" Ice	0.000	0.003
						1" Ice	0.000	0.003
LDF7-50A(1-5/8") ***	C	No	Inside Pole	120.000 - 0.000	6	No Ice	0.000	0.001
						1/2" Ice	0.000	0.001
						1" Ice	0.000	0.001
LDF5-50A(7/8") ***	A	No	Inside Pole	100.000 - 0.000	2	No Ice	0.000	0.000
						1/2" Ice	0.000	0.000
						1" Ice	0.000	0.000
LDF7-50A(1-5/8") ***	A	No	Inside Pole	88.000 - 0.000	6	No Ice	0.000	0.001
						1/2" Ice	0.000	0.001
						1" Ice	0.000	0.001

Feed Line/Linear Appurtenances Section Areas

Tower Section	Tower Elevation ft	Face	A_R ft^2	A_F ft^2	C_AA_A In Face ft^2	C_AA_A Out Face ft^2	Weight K

Tower Section	Tower Elevation ft	Face	A_R ft^2	A_F ft^2	C_AA_A In Face ft^2	C_AA_A Out Face ft^2	Weight K
L1	140.000-91.750	A	0.000	0.000	14.323	0.000	0.208
		B	0.000	0.000	0.000	0.000	0.000
		C	0.000	0.000	0.000	0.000	0.257
L2	91.750-45.500	A	0.000	0.000	23.449	0.000	0.560
		B	0.000	0.000	0.000	0.000	0.000
		C	0.000	0.000	0.000	0.000	0.357
L3	45.500-0.000	A	0.000	0.000	23.069	0.000	0.569
		B	0.000	0.000	0.000	0.000	0.000
		C	0.000	0.000	0.000	0.000	0.351

Feed Line/Linear Appurtenances Section Areas - With Ice

Tower Section	Tower Elevation ft	Face or Leg	Ice Thickness in	A_R ft^2	A_F ft^2	C_AA_A In Face ft^2	C_AA_A Out Face ft^2	Weight K
L1	140.000-91.750	A	1.699	0.000	0.000	29.906	0.000	0.546
		B		0.000	0.000	0.000	0.000	0.000
		C		0.000	0.000	0.000	0.000	0.257
L2	91.750-45.500	A	1.613	0.000	0.000	48.961	0.000	1.114
		B		0.000	0.000	0.000	0.000	0.000
		C		0.000	0.000	0.000	0.000	0.357
L3	45.500-0.000	A	1.447	0.000	0.000	47.183	0.000	1.080
		B		0.000	0.000	0.000	0.000	0.000
		C		0.000	0.000	0.000	0.000	0.351

Feed Line Center of Pressure

Section	Elevation ft	CP_X in	CP_Z in	CP_X Ice in	CP_Z Ice in
L1	140.000-91.750	-0.290	-0.322	-0.434	-0.482
L2	91.750-45.500	-0.445	-0.494	-0.638	-0.709
L3	45.500-0.000	-0.453	-0.503	-0.673	-0.747

Shielding Factor Ka

Tower Section	Feed Line Record No.	Description	Feed Line Segment Elev.	K_a No Ice	K_a Ice
L1	6	TYPE 7(1 5/8")	91.75 - 120.00	1.0000	1.0000
L2	6	TYPE 7(1 5/8")	45.50 - 91.75	1.0000	1.0000

Discrete Tower Loads

Description	Face or Leg	Offset Type	Offsets: Horz Lateral Vert ft ft ft	Azimuth Adjustment °	Placement ft		C_AA_A Front ft^2	C_AA_A Side ft^2	Weight K
PD1151-5	A	From Leg	0.000 0.000 8.000	0.000	140.000	No Ice 1/2" Ice 1" Ice	3.987 5.469 6.967	3.987 5.469 6.967	0.015 0.044 0.083
4' x 2" Pipe Mount	A	From Leg	0.000 0.000 2.000	0.000	140.000	No Ice 1/2" Ice 1" Ice	0.785 1.028 1.281	0.785 1.028 1.281	0.029 0.035 0.044
***									
Sector Mount [SM 514-1]	A	From Leg	1.000 0.000 0.000	0.000	134.000	No Ice 1/2" Ice 1" Ice	21.260 30.390 39.520	27.040 40.100 53.160	0.448 0.747 1.046
***									
(2) 742-215 w/ Mount Pipe	A	From Leg	4.000 0.000 3.000	0.000	120.000	No Ice 1/2" Ice 1" Ice	3.382 3.779 4.178	2.984 3.652 4.298	0.036 0.065 0.102
(2) 742-215 w/ Mount Pipe	B	From Leg	4.000 0.000 3.000	0.000	120.000	No Ice 1/2" Ice 1" Ice	3.382 3.779 4.178	2.984 3.652 4.298	0.036 0.065 0.102
(2) 742-215 w/ Mount Pipe	C	From Leg	4.000 0.000 3.000	0.000	120.000	No Ice 1/2" Ice 1" Ice	3.382 3.779 4.178	2.984 3.652 4.298	0.036 0.065 0.102
ET-X-TS-70-15-62-18-iR-RD w/ Mount Pipe	A	From Leg	4.000 0.000 3.000	0.000	120.000	No Ice 1/2" Ice 1" Ice	8.704 9.367 10.000	6.487 7.687 8.618	0.068 0.132 0.207
ET-X-TS-70-15-62-18-iR-RD w/ Mount Pipe	B	From Leg	4.000 0.000 3.000	0.000	120.000	No Ice 1/2" Ice 1" Ice	8.704 9.367 10.000	6.487 7.687 8.618	0.068 0.132 0.207
ET-X-TS-70-15-62-18-iR-RD w/ Mount Pipe	C	From Leg	4.000 0.000 3.000	0.000	120.000	No Ice 1/2" Ice 1" Ice	8.704 9.367 10.000	6.487 7.687 8.618	0.068 0.132 0.207
RRH-P4	A	From Leg	4.000 0.000 3.000	0.000	120.000	No Ice 1/2" Ice 1" Ice	3.191 3.439 3.696	2.075 2.292 2.517	0.060 0.083 0.109
RRH-P4	B	From Leg	4.000 0.000 3.000	0.000	120.000	No Ice 1/2" Ice 1" Ice	3.191 3.439 3.696	2.075 2.292 2.517	0.060 0.083 0.109
RRH-P4	C	From Leg	4.000 0.000 3.000	0.000	120.000	No Ice 1/2" Ice 1" Ice	3.191 3.439 3.696	2.075 2.292 2.517	0.060 0.083 0.109
RRH-C2A w/EXT FILTER	A	From Leg	4.000 0.000 3.000	0.000	120.000	No Ice 1/2" Ice 1" Ice	3.628 3.887 4.156	1.550 1.752 1.962	0.055 0.077 0.103
RRH-C2A w/EXT FILTER	B	From Leg	4.000 0.000 3.000	0.000	120.000	No Ice 1/2" Ice 1" Ice	3.628 3.887 4.156	1.550 1.752 1.962	0.055 0.077 0.103
RRH-C2A w/EXT FILTER	C	From Leg	4.000 0.000 3.000	0.000	120.000	No Ice 1/2" Ice 1" Ice	3.628 3.887 4.156	1.550 1.752 1.962	0.055 0.077 0.103
Miscellaneous [NA 507-1]	C	None		0.000	120.000	No Ice 1/2" Ice	4.800 6.700 8.600	4.800 6.700 8.600	0.245 0.294 0.343

Description	Face or Leg	Offset Type	Offsets: Horz Lateral Vert ft ft ft	Azimuth Adjustment °	Placement ft		C_AA_A Front ft^2	C_AA_A Side ft^2	Weight K
Platform Mount [LP 714-1]	C	None		0.000	120.000	1" Ice			
						No Ice	37.470	37.470	1.600
						1/2" Ice	44.230	44.230	2.040
						1" Ice	50.990	50.990	2.480
***									
ASP-705	A	From Leg	3.000 0.000 9.000	0.000	100.000	No Ice	5.880	5.880	0.025
						1/2" Ice	8.012	8.012	0.068
						1" Ice	10.160	10.160	0.124
SD314-H	B	From Leg	3.000 0.000 3.000	60.000	100.000	No Ice	4.290	4.290	0.021
						1/2" Ice	6.150	6.150	0.057
						1" Ice	8.010	8.010	0.094
4' x 2" Pipe Mount	A	From Leg	3.000 0.000 0.000	0.000	100.000	No Ice	0.785	0.785	0.029
						1/2" Ice	1.028	1.028	0.035
						1" Ice	1.281	1.281	0.044
4' x 2" Pipe Mount	B	From Leg	3.000 0.000 0.000	-30.000	100.000	No Ice	0.785	0.785	0.029
						1/2" Ice	1.028	1.028	0.035
						1" Ice	1.281	1.281	0.044
4' x 2" Pipe Mount	B	From Leg	3.000 0.000 0.000	60.000	100.000	No Ice	0.785	0.785	0.029
						1/2" Ice	1.028	1.028	0.035
						1" Ice	1.281	1.281	0.044
4' x 2" Pipe Mount	C	From Leg	3.000 0.000 0.000	30.000	100.000	No Ice	0.785	0.785	0.029
						1/2" Ice	1.028	1.028	0.035
						1" Ice	1.281	1.281	0.044
Side Arm Mount [SO 702-4]	C	None		0.000	100.000	No Ice	4.860	4.860	0.108
						1/2" Ice	6.600	6.600	0.152
						1" Ice	8.340	8.340	0.196
***									
RR65-18-02DPL2 w/ Mount Pipe	A	From Leg	4.000 0.000 1.000	0.000	88.000	No Ice	4.593	3.319	0.034
						1/2" Ice	5.088	4.089	0.069
						1" Ice	5.578	4.784	0.114
RR65-18-02DPL2 w/ Mount Pipe	B	From Leg	4.000 0.000 1.000	0.000	88.000	No Ice	4.593	3.319	0.034
						1/2" Ice	5.088	4.089	0.069
						1" Ice	5.578	4.784	0.114
RR65-18-02DPL2 w/ Mount Pipe	C	From Leg	4.000 0.000 1.000	0.000	88.000	No Ice	4.593	3.319	0.034
						1/2" Ice	5.088	4.089	0.069
						1" Ice	5.578	4.784	0.114
(2) 6' x 2" Mount Pipe	A	From Leg	4.000 0.000 1.000	0.000	88.000	No Ice	1.425	1.425	0.022
						1/2" Ice	1.925	1.925	0.033
						1" Ice	2.294	2.294	0.048
(2) 6' x 2" Mount Pipe	B	From Leg	4.000 0.000 1.000	0.000	88.000	No Ice	1.425	1.425	0.022
						1/2" Ice	1.925	1.925	0.033
						1" Ice	2.294	2.294	0.048
(2) 6' x 2" Mount Pipe	C	From Leg	4.000 0.000 1.000	0.000	88.000	No Ice	1.425	1.425	0.022
						1/2" Ice	1.925	1.925	0.033
						1" Ice	2.294	2.294	0.048
Platform Mount [LP 714-1]	C	None		0.000	88.000	No Ice	37.470	37.470	1.600
						1/2" Ice	44.230	44.230	2.040
						1" Ice	50.990	50.990	2.480
***									

Dishes

Description	Face or Leg	Dish Type	Offset Type	Offsets: Horz Lateral Vert ft	Azimuth Adjustment °	3 dB Beam Width °	Elevation ft	Outside Diameter ft		Aperture Area ft^2	Weight K
STARBEAM	A	Paraboloid w/Shroud (HP)	From Leg	2.000 2.000 1.500	0.000		134.000	2.000	No Ice 1/2" Ice 1" Ice	3.142 3.409 3.676	0.048 0.084 0.120
STARBEAM	A	Paraboloid w/Shroud (HP)	From Leg	2.000 5.000 1.500	0.000		134.000	2.000	No Ice 1/2" Ice 1" Ice	3.142 3.409 3.676	0.048 0.084 0.120
STARBEAM	A	Paraboloid w/Shroud (HP)	From Leg	2.000 8.000 1.500	0.000		134.000	2.000	No Ice 1/2" Ice 1" Ice	3.142 3.409 3.676	0.048 0.084 0.120
STARBEAM	A	Paraboloid w/Shroud (HP)	From Leg	2.000 -2.000 1.500	0.000		134.000	2.000	No Ice 1/2" Ice 1" Ice	3.142 3.409 3.676	0.048 0.084 0.120
STARBEAM	A	Paraboloid w/Shroud (HP)	From Leg	2.000 -5.000 1.500	0.000		134.000	2.000	No Ice 1/2" Ice 1" Ice	3.142 3.409 3.676	0.048 0.084 0.120
STARBEAM	A	Paraboloid w/Shroud (HP)	From Leg	2.000 -8.000 1.500	0.000		134.000	2.000	No Ice 1/2" Ice 1" Ice	3.142 3.409 3.676	0.048 0.084 0.120
STARBEAM	A	Paraboloid w/Shroud (HP)	From Leg	2.000 2.000 -1.500	0.000		134.000	2.000	No Ice 1/2" Ice 1" Ice	3.142 3.409 3.676	0.048 0.084 0.120
STARBEAM	A	Paraboloid w/Shroud (HP)	From Leg	2.000 5.000 -1.500	0.000		134.000	2.000	No Ice 1/2" Ice 1" Ice	3.142 3.409 3.676	0.048 0.084 0.120
STARBEAM	A	Paraboloid w/Shroud (HP)	From Leg	2.000 8.000 -1.500	0.000		134.000	2.000	No Ice 1/2" Ice 1" Ice	3.142 3.409 3.676	0.048 0.084 0.120
STARBEAM	A	Paraboloid w/Shroud (HP)	From Leg	2.000 -2.000 -1.500	0.000		134.000	2.000	No Ice 1/2" Ice 1" Ice	3.142 3.409 3.676	0.048 0.084 0.120
STARBEAM	A	Paraboloid w/Shroud (HP)	From Leg	2.000 -5.000 -1.500	0.000		134.000	2.000	No Ice 1/2" Ice 1" Ice	3.142 3.409 3.676	0.048 0.084 0.120
STARBEAM	A	Paraboloid w/Shroud (HP)	From Leg	2.000 -8.000 -1.500	0.000		134.000	2.000	No Ice 1/2" Ice 1" Ice	3.142 3.409 3.676	0.048 0.084 0.120

Load Combinations

Comb. No.	Description
1	Dead Only
2	1.2 Dead+1.6 Wind 0 deg - No Ice
3	0.9 Dead+1.6 Wind 0 deg - No Ice
4	1.2 Dead+1.6 Wind 30 deg - No Ice
5	0.9 Dead+1.6 Wind 30 deg - No Ice
6	1.2 Dead+1.6 Wind 60 deg - No Ice
7	0.9 Dead+1.6 Wind 60 deg - No Ice
8	1.2 Dead+1.6 Wind 90 deg - No Ice
9	0.9 Dead+1.6 Wind 90 deg - No Ice
10	1.2 Dead+1.6 Wind 120 deg - No Ice
11	0.9 Dead+1.6 Wind 120 deg - No Ice
12	1.2 Dead+1.6 Wind 150 deg - No Ice
13	0.9 Dead+1.6 Wind 150 deg - No Ice
14	1.2 Dead+1.6 Wind 180 deg - No Ice

Comb. No.	Description
15	0.9 Dead+1.6 Wind 180 deg - No Ice
16	1.2 Dead+1.6 Wind 210 deg - No Ice
17	0.9 Dead+1.6 Wind 210 deg - No Ice
18	1.2 Dead+1.6 Wind 240 deg - No Ice
19	0.9 Dead+1.6 Wind 240 deg - No Ice
20	1.2 Dead+1.6 Wind 270 deg - No Ice
21	0.9 Dead+1.6 Wind 270 deg - No Ice
22	1.2 Dead+1.6 Wind 300 deg - No Ice
23	0.9 Dead+1.6 Wind 300 deg - No Ice
24	1.2 Dead+1.6 Wind 330 deg - No Ice
25	0.9 Dead+1.6 Wind 330 deg - No Ice
26	1.2 Dead+1.0 Ice+1.0 Temp
27	1.2 Dead+1.0 Wind 0 deg+1.0 Ice+1.0 Temp
28	1.2 Dead+1.0 Wind 30 deg+1.0 Ice+1.0 Temp
29	1.2 Dead+1.0 Wind 60 deg+1.0 Ice+1.0 Temp
30	1.2 Dead+1.0 Wind 90 deg+1.0 Ice+1.0 Temp
31	1.2 Dead+1.0 Wind 120 deg+1.0 Ice+1.0 Temp
32	1.2 Dead+1.0 Wind 150 deg+1.0 Ice+1.0 Temp
33	1.2 Dead+1.0 Wind 180 deg+1.0 Ice+1.0 Temp
34	1.2 Dead+1.0 Wind 210 deg+1.0 Ice+1.0 Temp
35	1.2 Dead+1.0 Wind 240 deg+1.0 Ice+1.0 Temp
36	1.2 Dead+1.0 Wind 270 deg+1.0 Ice+1.0 Temp
37	1.2 Dead+1.0 Wind 300 deg+1.0 Ice+1.0 Temp
38	1.2 Dead+1.0 Wind 330 deg+1.0 Ice+1.0 Temp
39	Dead+Wind 0 deg - Service
40	Dead+Wind 30 deg - Service
41	Dead+Wind 60 deg - Service
42	Dead+Wind 90 deg - Service
43	Dead+Wind 120 deg - Service
44	Dead+Wind 150 deg - Service
45	Dead+Wind 180 deg - Service
46	Dead+Wind 210 deg - Service
47	Dead+Wind 240 deg - Service
48	Dead+Wind 270 deg - Service
49	Dead+Wind 300 deg - Service
50	Dead+Wind 330 deg - Service

Maximum Member Forces

Section No.	Elevation ft	Component Type	Condition	Gov. Load Comb.	Axial K	Major Axis Moment kip-ft	Minor Axis Moment kip-ft
L1	140 - 91.75	Pole	Max Tension	14	0.000	0.001	0.000
			Max. Compression	26	-18.860	-0.344	11.451
			Max. Mx	8	-8.084	-291.285	10.833
			Max. My	14	-7.955	-0.010	-321.765
			Max. Vy	20	-10.867	291.192	10.833
			Max. Vx	14	11.760	-0.010	-321.765
			Max. Torque	20			-6.879
L2	91.75 - 45.5	Pole	Max Tension	1	0.000	0.000	0.000
			Max. Compression	26	-34.248	0.522	13.289
			Max. Mx	20	-17.550	953.903	20.931
			Max. My	14	-17.466	0.301	-1024.891
			Max. Vy	20	-16.508	953.903	20.931
			Max. Vx	14	17.407	0.301	-1024.891
			Max. Torque	20			-6.876
L3	45.5 - 0	Pole	Max Tension	1	0.000	0.000	0.000
			Max. Compression	26	-49.705	1.612	14.828
			Max. Mx	20	-29.225	1853.153	31.486
			Max. My	14	-29.223	0.745	-1967.224
			Max. Vy	20	-19.222	1853.153	31.486
			Max. Vx	14	20.074	0.745	-1967.224
			Max. Torque	20			-6.854

Maximum Reactions

Location	Condition	Gov. Load Comb.	Vertical K	Horizontal, X K	Horizontal, Z K
Pole	Max. Vert	27	49.705	0.000	4.499
	Max. H_x	20	29.245	19.192	0.192
	Max. H_z	2	29.245	-0.000	19.609
	Max. M_x	2	1915.404	-0.000	19.609
	Max. M_z	8	1851.680	-19.192	0.192
	Max. Torsion	8	6.843	-19.192	0.192
	Min. Vert	11	21.934	-16.314	-10.574
	Min. H_x	8	29.245	-19.192	0.192
	Min. H_z	14	29.245	-0.000	-20.042
	Min. M_x	14	-1967.224	-0.000	-20.042
	Min. M_z	20	-1853.153	19.192	0.192
	Min. Torsion	20	-6.844	19.192	0.192

Tower Mast Reaction Summary

Load Combination	Vertical K	$Shear_x$ K	$Shear_z$ K	Overturning Moment, M_x kip-ft	Overturning Moment, M_z kip-ft	Torque kip-ft
Dead Only	24.371	0.000	-0.000	-3.641	0.606	0.000
1.2 Dead+1.6 Wind 0 deg - No Ice	29.245	0.000	-19.609	-1915.404	0.745	0.810
0.9 Dead+1.6 Wind 0 deg - No Ice	21.934	0.000	-19.609	-1893.242	0.553	0.808
1.2 Dead+1.6 Wind 30 deg - No Ice	29.245	9.355	-17.118	-1678.609	-891.559	-2.056
0.9 Dead+1.6 Wind 30 deg - No Ice	21.934	9.355	-17.118	-1659.007	-882.052	-2.058
1.2 Dead+1.6 Wind 60 deg - No Ice	29.245	16.438	-10.162	-1010.262	-1577.772	-5.049
0.9 Dead+1.6 Wind 60 deg - No Ice	21.934	16.438	-10.162	-997.953	-1560.743	-5.049
1.2 Dead+1.6 Wind 90 deg - No Ice	29.245	19.192	-0.192	-31.484	-1851.680	-6.843
0.9 Dead+1.6 Wind 90 deg - No Ice	21.934	19.192	-0.192	-29.979	-1831.609	-6.842
1.2 Dead+1.6 Wind 120 deg - No Ice	29.245	16.314	10.574	1059.412	-1560.286	-5.110
0.9 Dead+1.6 Wind 120 deg - No Ice	21.934	16.314	10.574	1048.689	-1543.489	-5.107
1.2 Dead+1.6 Wind 150 deg - No Ice	29.245	9.458	17.565	1732.398	-905.938	-3.367
0.9 Dead+1.6 Wind 150 deg - No Ice	21.934	9.458	17.565	1714.336	-896.257	-3.364
1.2 Dead+1.6 Wind 180 deg - No Ice	29.245	0.000	20.042	1967.224	0.745	-0.810
0.9 Dead+1.6 Wind 180 deg - No Ice	21.934	0.000	20.042	1946.630	0.553	-0.808
1.2 Dead+1.6 Wind 210 deg - No Ice	29.245	-9.458	17.565	1732.392	907.424	1.964
0.9 Dead+1.6 Wind 210 deg - No Ice	21.934	-9.458	17.565	1714.331	897.361	1.965
1.2 Dead+1.6 Wind 240 deg - No Ice	29.245	-16.314	10.574	1059.405	1561.764	4.298
0.9 Dead+1.6 Wind 240 deg - No Ice	21.934	-16.314	10.574	1048.684	1544.587	4.298
1.2 Dead+1.6 Wind 270 deg - No Ice	29.245	-19.192	-0.192	-31.484	1853.153	6.844
0.9 Dead+1.6 Wind 270 deg - No Ice	21.934	-19.192	-0.192	-29.979	1832.704	6.842
1.2 Dead+1.6 Wind 300 deg - No Ice	29.245	-16.438	-10.162	-1010.255	1579.250	5.861
0.9 Dead+1.6 Wind 300 deg	21.934	-16.438	-10.162	-997.948	1561.841	5.858

Load Combination	Vertical K	$Shear_x$ K	$Shear_z$ K	Overturning Moment, M_x kip-ft	Overturning Moment, M_z kip-ft	Torque kip-ft
- No Ice 1.2 Dead+1.6 Wind 330 deg	29.245	-9.355	-17.118	-1678.602	893.045	3.460
- No Ice 0.9 Dead+1.6 Wind 330 deg	21.934	-9.355	-17.118	-1659.003	883.156	3.457
- No Ice 1.2 Dead+1.0 Ice+1.0 Temp	49.705	-0.000	-0.000	-14.828	1.612	0.001
1.2 Dead+1.0 Wind 0 deg+1.0 Ice+1.0 Temp	49.705	-0.000	-4.499	-464.631	1.617	0.248
1.2 Dead+1.0 Wind 30 deg+1.0 Ice+1.0 Temp	49.705	2.212	-3.918	-407.610	-217.685	-0.491
1.2 Dead+1.0 Wind 60 deg+1.0 Ice+1.0 Temp	49.705	3.869	-2.307	-248.230	-383.784	-1.207
1.2 Dead+1.0 Wind 90 deg+1.0 Ice+1.0 Temp	49.705	4.501	-0.031	-19.425	-448.411	-1.625
1.2 Dead+1.0 Wind 120 deg+1.0 Ice+1.0 Temp	49.705	3.849	2.373	228.307	-380.844	-1.335
1.2 Dead+1.0 Wind 150 deg+1.0 Ice+1.0 Temp	49.705	2.229	3.990	388.500	-220.130	-0.905
1.2 Dead+1.0 Wind 180 deg+1.0 Ice+1.0 Temp	49.705	-0.000	4.568	445.193	1.617	-0.247
1.2 Dead+1.0 Wind 210 deg+1.0 Ice+1.0 Temp	49.705	-2.229	3.990	388.499	223.364	0.478
1.2 Dead+1.0 Wind 240 deg+1.0 Ice+1.0 Temp	49.705	-3.849	2.373	228.306	384.076	1.088
1.2 Dead+1.0 Wind 270 deg+1.0 Ice+1.0 Temp	49.705	-4.501	-0.031	-19.425	451.642	1.626
1.2 Dead+1.0 Wind 300 deg+1.0 Ice+1.0 Temp	49.705	-3.869	-2.307	-248.229	387.016	1.456
1.2 Dead+1.0 Wind 330 deg+1.0 Ice+1.0 Temp	49.705	-2.212	-3.918	-407.609	220.919	0.921
Dead+Wind 0 deg - Service	24.371	0.000	-4.874	-475.752	0.613	0.203
Dead+Wind 30 deg - Service	24.371	2.325	-4.255	-417.241	-219.817	-0.517
Dead+Wind 60 deg - Service	24.371	4.085	-2.526	-252.130	-389.313	-1.267
Dead+Wind 90 deg - Service	24.371	4.770	-0.048	-10.367	-456.956	-1.716
Dead+Wind 120 deg - Service	24.371	4.055	2.628	259.082	-385.014	-1.281
Dead+Wind 150 deg - Service	24.371	2.351	4.366	425.383	-223.395	-0.844
Dead+Wind 180 deg - Service	24.371	0.000	4.981	483.415	0.613	-0.203
Dead+Wind 210 deg - Service	24.371	-2.351	4.366	425.383	224.620	0.493
Dead+Wind 240 deg - Service	24.371	-4.055	2.628	259.082	386.239	1.078
Dead+Wind 270 deg - Service	24.371	-4.770	-0.048	-10.366	458.180	1.716
Dead+Wind 300 deg - Service	24.371	-4.085	-2.526	-252.130	390.537	1.470
Dead+Wind 330 deg - Service	24.371	-2.325	-4.255	-417.241	221.042	0.868

Solution Summary

	Sum of Applied Forces			Sum of Reactions			
Load Comb.	PX K	PY K	PZ K	PX K	PY K	PZ K	% Error
1	0.000	-24.371	0.000	0.000	24.371	0.000	0.000%
2	0.000	-29.245	-19.609	-0.000	29.245	19.609	0.000%
3	0.000	-21.934	-19.609	-0.000	21.934	19.609	0.000%
4	9.355	-29.245	-17.118	-9.355	29.245	17.118	0.000%
5	9.355	-21.934	-17.118	-9.355	21.934	17.118	0.000%
6	16.438	-29.245	-10.162	-16.438	29.245	10.162	0.000%
7	16.438	-21.934	-10.162	-16.438	21.934	10.162	0.000%
8	19.192	-29.245	-0.192	-19.192	29.245	0.192	0.000%
9	19.192	-21.934	-0.192	-19.192	21.934	0.192	0.000%
10	16.314	-29.245	10.574	-16.314	29.245	-10.574	0.000%

Load Comb.	Sum of Applied Forces PX K	PY K	PZ K	Sum of Reactions PX K	PY K	PZ K	% Error
11	16.314	-21.934	10.574	-16.314	21.934	-10.574	0.000%
12	9.458	-29.245	17.565	-9.458	29.245	-17.565	0.000%
13	9.458	-21.934	17.565	-9.458	21.934	-17.565	0.000%
14	0.000	-29.245	20.042	-0.000	29.245	-20.042	0.000%
15	0.000	-21.934	20.042	-0.000	21.934	-20.042	0.000%
16	-9.458	-29.245	17.565	9.458	29.245	-17.565	0.000%
17	-9.458	-21.934	17.565	9.458	21.934	-17.565	0.000%
18	-16.314	-29.245	10.574	16.314	29.245	-10.574	0.000%
19	-16.314	-21.934	10.574	16.314	21.934	-10.574	0.000%
20	-19.192	-29.245	-0.192	19.192	29.245	0.192	0.000%
21	-19.192	-21.934	-0.192	19.192	21.934	0.192	0.000%
22	-16.438	-29.245	-10.162	16.438	29.245	10.162	0.000%
23	-16.438	-21.934	-10.162	16.438	21.934	10.162	0.000%
24	-9.355	-29.245	-17.118	9.355	29.245	17.118	0.000%
25	-9.355	-21.934	-17.118	9.355	21.934	17.118	0.000%
26	0.000	-49.705	0.000	0.000	49.705	0.000	0.000%
27	0.000	-49.705	-4.499	0.000	49.705	4.499	0.000%
28	2.212	-49.705	-3.918	-2.212	49.705	3.918	0.000%
29	3.869	-49.705	-2.307	-3.869	49.705	2.307	0.000%
30	4.501	-49.705	-0.031	-4.501	49.705	0.031	0.000%
31	3.849	-49.705	2.373	-3.849	49.705	-2.373	0.000%
32	2.229	-49.705	3.990	-2.229	49.705	-3.990	0.000%
33	0.000	-49.705	4.568	0.000	49.705	-4.568	0.000%
34	-2.229	-49.705	3.990	2.229	49.705	-3.990	0.000%
35	-3.849	-49.705	2.373	3.849	49.705	-2.373	0.000%
36	-4.501	-49.705	-0.031	4.501	49.705	0.031	0.000%
37	-3.869	-49.705	-2.307	3.869	49.705	2.307	0.000%
38	-2.212	-49.705	-3.918	2.212	49.705	3.918	0.000%
39	0.000	-24.371	-4.874	0.000	24.371	4.874	0.000%
40	2.325	-24.371	-4.255	-2.325	24.371	4.255	0.000%
41	4.085	-24.371	-2.526	-4.085	24.371	2.526	0.000%
42	4.770	-24.371	-0.048	-4.770	24.371	0.048	0.000%
43	4.055	-24.371	2.628	-4.055	24.371	-2.628	0.000%
44	2.351	-24.371	4.366	-2.351	24.371	-4.366	0.000%
45	0.000	-24.371	4.981	0.000	24.371	-4.981	0.000%
46	-2.351	-24.371	4.366	2.351	24.371	-4.366	0.000%
47	-4.055	-24.371	2.628	4.055	24.371	-2.628	0.000%
48	-4.770	-24.371	-0.048	4.770	24.371	0.048	0.000%
49	-4.085	-24.371	-2.526	4.085	24.371	2.526	0.000%
50	-2.325	-24.371	-4.255	2.325	24.371	4.255	0.000%

Non-Linear Convergence Results

Load Combination	Converged?	Number of Cycles	Displacement Tolerance	Force Tolerance
1	Yes	4	0.00000001	0.00000001
2	Yes	4	0.00000001	0.00066852
3	Yes	4	0.00000001	0.00036480
4	Yes	5	0.00000001	0.00064145
5	Yes	5	0.00000001	0.00028315
6	Yes	5	0.00000001	0.00083271
7	Yes	5	0.00000001	0.00037447
8	Yes	5	0.00000001	0.00030535
9	Yes	5	0.00000001	0.00014316
10	Yes	5	0.00000001	0.00070598
11	Yes	5	0.00000001	0.00031169
12	Yes	5	0.00000001	0.00082247
13	Yes	5	0.00000001	0.00036674
14	Yes	4	0.00000001	0.00068111
15	Yes	4	0.00000001	0.00036761
16	Yes	5	0.00000001	0.00078920
17	Yes	5	0.00000001	0.00035055
18	Yes	5	0.00000001	0.00070793
19	Yes	5	0.00000001	0.00031221
20	Yes	5	0.00000001	0.00030549

21	Yes	5	0.00000001	0.00014320
22	Yes	5	0.00000001	0.00085137
23	Yes	5	0.00000001	0.00038355
24	Yes	5	0.00000001	0.00062028
25	Yes	5	0.00000001	0.00027298
26	Yes	4	0.00000001	0.00011577
27	Yes	5	0.00000001	0.00021833
28	Yes	5	0.00000001	0.00027018
29	Yes	5	0.00000001	0.00029815
30	Yes	5	0.00000001	0.00023450
31	Yes	5	0.00000001	0.00025271
32	Yes	5	0.00000001	0.00026084
33	Yes	5	0.00000001	0.00019918
34	Yes	5	0.00000001	0.00025647
35	Yes	5	0.00000001	0.00025196
36	Yes	5	0.00000001	0.00023564
37	Yes	5	0.00000001	0.00030434
38	Yes	5	0.00000001	0.00027159
39	Yes	4	0.00000001	0.00004663
40	Yes	4	0.00000001	0.00022979
41	Yes	4	0.00000001	0.00048489
42	Yes	4	0.00000001	0.00040778
43	Yes	4	0.00000001	0.00033563
44	Yes	4	0.00000001	0.00042605
45	Yes	4	0.00000001	0.00004713
46	Yes	4	0.00000001	0.00037246
47	Yes	4	0.00000001	0.00031622
48	Yes	4	0.00000001	0.00040870
49	Yes	4	0.00000001	0.00051855
50	Yes	4	0.00000001	0.00023211

Maximum Tower Deflections - Service Wind

Section No.	Elevation ft	Horz. Deflection in	Gov. Load Comb.	Tilt °	Twist °
L1	140 - 91.75	23.313	45	1.299	0.024
L2	95.5 - 45.5	11.771	45	1.110	0.011
L3	50 - 0	3.329	45	0.607	0.004

Critical Deflections and Radius of Curvature - Service Wind

Elevation ft	Appurtenance	Gov. Load Comb.	Deflection in	Tilt °	Twist °	Radius of Curvature ft
140.000	PD1151-5	45	23.313	1.299	0.024	62811
135.500	STARBEAM	45	22.093	1.286	0.023	62811
134.000	Sector Mount [SM 514-1]	45	21.686	1.282	0.022	52343
132.500	STARBEAM	45	21.281	1.277	0.022	41874
120.000	(2) 742-215 w/ Mount Pipe	45	17.935	1.236	0.018	15702
100.000	ASP-705	45	12.846	1.141	0.012	7850
88.000	RR65-18-02DPL2 w/ Mount Pipe	45	10.053	1.046	0.009	6114

Maximum Tower Deflections - Design Wind

Section No.	Elevation ft	Horz. Deflection in	Gov. Load Comb.	Tilt °	Twist °
L1	140 - 91.75	95.425	14	5.309	0.097
L2	95.5 - 45.5	48.043	14	4.541	0.043

Section No.	Elevation ft	Horz. Deflection in	Gov. Load Comb.	Tilt °	Twist °
L3	50 - 0	13.566	14	2.474	0.015

Critical Deflections and Radius of Curvature - Design Wind

Elevation ft	Appurtenance	Gov. Load Comb.	Deflection in	Tilt °	Twist °	Radius of Curvature ft
140.000	PD1151-5	14	95.425	5.309	0.097	15955
135.500	STARBEAM	14	90.409	5.263	0.091	15955
134.000	Sector Mount [SM 514-1]	14	88.740	5.248	0.089	13296
132.500	STARBEAM	14	87.073	5.232	0.087	10636
120.000	(2) 742-215 w/ Mount Pipe	14	73.327	5.078	0.071	3986
100.000	ASP-705	14	52.448	4.674	0.048	1989
88.000	RR65-18-02DPL2 w/ Mount Pipe	14	41.013	4.279	0.037	1529

Compression Checks

Pole Design Data

Section No.	Elevation ft	Size	L ft	L_u ft	Kl/r	A in^2	P_u K	ϕP_n K	Ratio $\frac{P_u}{\phi P_n}$
L1	140 - 91.75 (1)	TP29.239x22x0.25	48.250	0.000	0.0	22.556	-7.955	1509.920	0.005
L2	91.75 - 45.5 (2)	TP35.678x28.176x0.313	50.000	0.000	0.0	34.409	-17.466	2486.200	0.007
L3	45.5 - 0 (3)	TP41.88x34.378x0.375	50.000	0.000	0.0	49.401	-29.223	3572.550	0.008

Pole Bending Design Data

Section No.	Elevation ft	Size	M_{ux} kip-ft	ϕM_{nx} kip-ft	Ratio $\frac{M_{ux}}{\phi M_{nx}}$	M_{uy} kip-ft	ϕM_{ny} kip-ft	Ratio $\frac{M_{uy}}{\phi M_{ny}}$
L1	140 - 91.75 (1)	TP29.239x22x0.25	321.764	881.792	0.365	0.000	881.792	0.000
L2	91.75 - 45.5 (2)	TP35.678x28.176x0.313	1024.892	1771.508	0.579	0.000	1771.508	0.000
L3	45.5 - 0 (3)	TP41.88x34.378x0.375	1967.225	3045.542	0.646	0.000	3045.542	0.000

Pole Shear Design Data

Section No.	Elevation ft	Size	Actual V_u K	ϕV_n K	Ratio $\frac{V_u}{\phi V_n}$	Actual T_u kip-ft	ϕT_n kip-ft	Ratio $\frac{T_u}{\phi T_n}$
L1	140 - 91.75 (1)	TP29.239x22x0.25	11.760	754.962	0.016	0.815	1765.742	0.000
L2	91.75 - 45.5 (2)	TP35.678x28.176x0.313	17.407	1234.170	0.014	0.812	3547.350	0.000
L3	45.5 - 0 (3)	TP41.88x34.378x0.375	20.074	1786.270	0.011	0.810	6098.533	0.000

Pole Interaction Design Data

Section No.	Elevation ft	Ratio $\frac{P_u}{\phi P_n}$	Ratio $\frac{M_{ux}}{\phi M_{nx}}$	Ratio $\frac{M_{uy}}{\phi M_{ny}}$	Ratio $\frac{V_u}{\phi V_n}$	Ratio $\frac{T_u}{\phi T_n}$	Comb. Stress Ratio	Allow. Stress Ratio	Criteria
L1	140 - 91.75 (1)	0.005	0.365	0.000	0.016	0.000	0.370 ✔	1.000	4.8.2 ✔
L2	91.75 - 45.5 (2)	0.007	0.579	0.000	0.014	0.000	0.586 ✔	1.000	4.8.2 ✔
L3	45.5 - 0 (3)	0.008	0.646	0.000	0.011	0.000	0.654 ✔	1.000	4.8.2 ✔

Section Capacity Table

Section No.	Elevation ft	Component Type	Size	Critical Element	P K	ϕP_{allow} K	% Capacity	Pass Fail
L1	140 - 91.75	Pole	TP29.239x22x0.25	1	-7.955	1509.920	37.0	Pass
L2	91.75 - 45.5	Pole	TP35.678x28.176x0.313	2	-17.466	2486.200	58.6	Pass
L3	45.5 - 0	Pole	TP41.88x34.378x0.375	3	-29.223	3572.550	65.4	Pass
							Summary	
						Pole (L3)	65.4	Pass
						RATING =	**65.4**	**Pass**

APPENDIX B

BASE LEVEL DRAWING

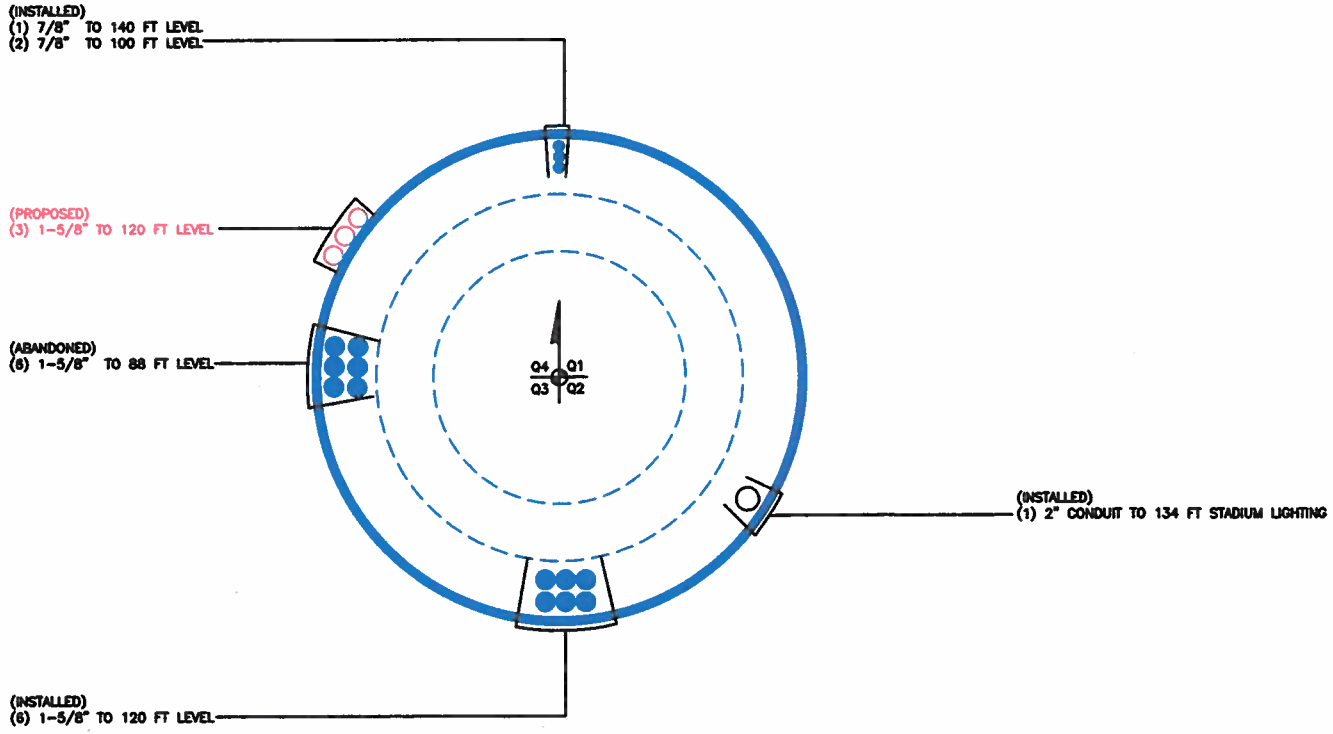

BUSINESS UNIT: 875358 TOWER ID: C_BASELEVEL

APPENDIX C

ADDITIONAL CALCULATIONS

Monopole Drilled Pier

Checks capacity of a single drilled shaft foundation for a monopole per TIA-222-G

BU#: 875358
Site Name: *COFFMAN HIGH SCHOOL*
App Number: *167727, Rev. 1*

ACI 318 Version:	2008

Factored Design Reactions		
Shear, S:	20.00	kips
Moment, Mt:	1967.00	ft-kips
Tower Weight, Wt:	29.00	kips
Tower Height, H:	140	ft
Base Diameter, BD:	41.88	in

Foundation Dimensions		
Caisson Diameter, CD:	6.0	ft
Ext. Above Grade, E:	1.0	ft
Depth Below Grade, L:	14.0	ft
Neglected Depth, N:	3.5	ft
Rebar Size, Sp:	10	
Rebar Quantity, mp:	32	
Tie Size, tp:	4	

Material Properties		
Rebar Tensile, Fy:	60	ksi
Concrete Strength, F'c:	4000	psi
Concrete Density, δx:	150	pcf
Clear Cover, cc:	3.0	in

Soil Properties		
Soil Unit Weight, γ:	136	pcf
Ultimate Gross Bearing, Bc:	50.000	ksf
Seismic Design Cat, z:	B	

Caisson Analysis		
Depth to Zero Shear:	5.8	ft
Max Moment:	2085.52	ft-kips
Overturning FOS:	9.44	

Depth		Shear		Moment	
3	ft	20.1	kips	2029	ft-kips
4.5	ft	20.1	kips	2059.1	ft-kips
6	ft	-2.8	kips	2072	ft-kips

Design Checks	Capacity/ Availability	Demand/ Limits	Check
Bearing Pressure (ksf):	37.50	3.28	OK
Minimum Req'd Dia. (ft):	6.00	4.99	OK
Rebar Area (in^2):	40.64	13.57	OK
Pier moment capacity (k-ft):	5334.03	2085.52	OK
Rebar spacing (in):	4.99	2 < Bs <18	OK
Development Length (in):	95.20	48.19	OK
Soil moment capacity (FOS):	9.44	1.33	OK

☐ **Assume 0.33% Minimum Steel?**

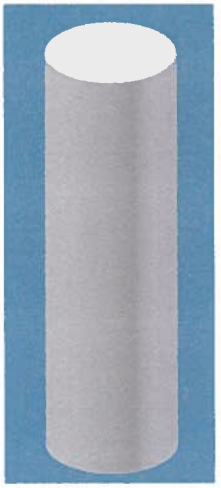

Bearing: 8.7%

Pier: 39.1%

Soil: 14.1%

Moment Capacity of Drilled Concrete Shaft (Caisson) for TIA Rev F or G

Note: Shaft assumed to have ties, not spiral, transverse reinforcing

Site Data

BU#: *875358*
Site Name: *COFFMAN HIGH SCHOOL*
App #: *167727, Rev. 1*

Loads Already Factored		
For M (WL)	1.3	<---Disregard
For P (DL)	1.3	<---Disregard

Pier Properties

Concrete:

Pier Diameter =	6.0	ft
Concrete Area =	4071.5	in^2

Reinforcement:

Clear Cover to **Tie**=	3.00	in
Horiz. **Tie** Bar Size=	4	
Vert. Cage Diameter =	5.31	ft
Vert. Cage Diameter =	63.73	in
Vertical Bar Size =	10	
Bar Diameter =	1.27	in
Bar Area =	1.27	in^2
Number of Bars =	32	
As Total=	40.64	in^2
A s/ Aconc, Rho:	0.0100	1.00%

ACI 10.5 , ACI 21.10.4, and IBC 1810.

Min As for Flexural, Tension Controlled, Shafts:

(3)*(Sqrt(f'c)/Fy:	0.0032
200 / Fy:	0.0033

Minimum Rho Check:

Actual Req'd Min. Rho:	0.33%	Flexural
Provided Rho:	1.00%	OK

Ref. Shaft Max Axial Capacities, ϕ Max(Pn or Tn):		
Max Pu = (φ=0.65) Pn.		
Pn per ACI 318 (10-2)	8394.54	kips
at Mu=(ϕ=0.65)Mn=	4355.67	ft-kips
Max Tu, (φ=0.9) Tn =	2194.56	kips
at Mu=ϕ=(0.90)Mn=	0.00	ft-kips

Maximum Shaft Superimposed Forces

TIA Revision:	G	
Max. Factored Shaft Mu:	2085.52	ft-kips (* Note)
Max. Factored Shaft Pu:	29	kips
Max Axial Force Type:	Comp.	

(*) Note: Max Shaft Superimposed Moment does not necessarily equal to the shaft top reaction moment

Load Factor	Shaft Factored Loads		
1.00	Mu:	2085.52	ft-kips
1.00	Pu:	29	kips

Material Properties

Concrete Comp. strength, f'c =	4000	psi
Reinforcement yield strength, Fy =	60	ksi
Reinforcing Modulus of Elasticity, E =	29000	ksi
Reinforcement yield strain =	0.00207	
Limiting compressive strain =	0.003	

ACI 318 Code

Select Analysis ACI Code=	2008

Seismic Properties

Seismic Design Category =	B
Seismic Risk =	**Low**

Solve (Run) <-- Press Upon Completing All Input

Results:

Governing Orientation Case: **1**

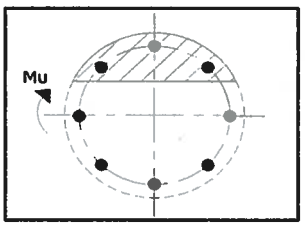

Case 1

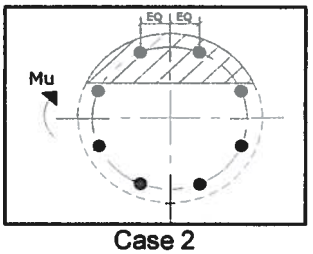

Case 2

Dist. From Edge to Neutral Axis:	**13.14**	in
Extreme Steel Strain, εt:	**0.0125**	
εt > 0.0050, Tension Controlled		
Reduction Factor,φ:	**0.900**	

Output Note: Negative Pu=Tension

For Axial Compression, φ Pn = Pu:	29.00	kips
Drilled Shaft Moment Capacity, φMn:	**5334.03**	ft-kips
Drilled Shaft Superimposed Mu:	**2085.52**	ft-kips

(Mu/φMn, Drilled Shaft Flexure CSR:	**39.1%**

Square, Stiffened / Unstiffened Base Plate, Any Rod Material - Rev. F /G

Assumptions: 1) Rod groups at corners. Total # rods divisible by 4. Maximum total # of rods = 48 (12 per Corner).
2) Rod Spacing = Straight Center-to-Center distance between any (2) adjacent rods (same corner)
3) Clear space between bottom of leveling nut and top of concrete not exceeding (1)*(Rod Diameter)

Site Data

BU#: *875358*
Site Name: *COFFMAN HIGH SCHOOI*
App #: *167727, Rev. 1*

Anchor Rod Data		
Eta Factor, η	0.5	TIA G (Fig. 4-4)
Qty:	12	
Diam:	2.25	in
Rod Material:	A615-J	
Yield, Fy:	75	ksi
Strength, Fu:	100	ksi
Bolt Circle:	48	in
Anchor Spacing:	6	in

Plate Data		
W=Side:	47	in
Thick:	3	in
Grade:	50	ksi
Clip Distance:	16	in

Stiffener Data (Welding at both sides)		
Configuration:	Unstiffened	
Weld Type:		**
Groove Depth:		in **
Groove Angle:		degrees
Fillet H. Weld:		<-- Disregard
Fillet V. Weld:		in
Width:		in
Height:		in
Thick:		in
Notch:		in
Grade:		ksi
Weld str.:		ksi

Pole Data		
Diam:	41.88	in
Thick:	0.375	in
Grade:	65	ksi
# of Sides:	18	"0" IF Round

Base Reactions		
TIA Revision:	G	
Factored Moment, Mu:	1967	ft-kips
Factored Axial, Pu:	29	kips
Factored Shear, Vu:	20	kips

Anchor Rod Results

TIA G --> Max Rod (Cu+ Vu/η):	169.7 Kips
Axial Design Strength, Φ*Fu*Anet:	260.0 Kips
Anchor Rod Stress Ratio:	65.3% Pass

Base Plate Results Flexural Check

Base Plate Stress:	22.7 ksi
PL Design Bending Strength, Φ*Fy:	45.0 ksi
Base Plate Stress Ratio:	50.4% Pass

PL Ref. Data
Yield Line (in): 24.59
Max PL Length: 24.59

N/A - Unstiffened

Stiffener Results

Horizontal Weld :	N/A
Vertical Weld:	N/A
Plate Flex+Shear, fb/Fb+(fv/Fv)^2:	N/A
Plate Tension+Shear, ft/Ft+(fv/Fv)^2:	N/A
Plate Comp. (AISC Bracket):	N/A

Pole Results

Pole Punching Shear Check:	N/A

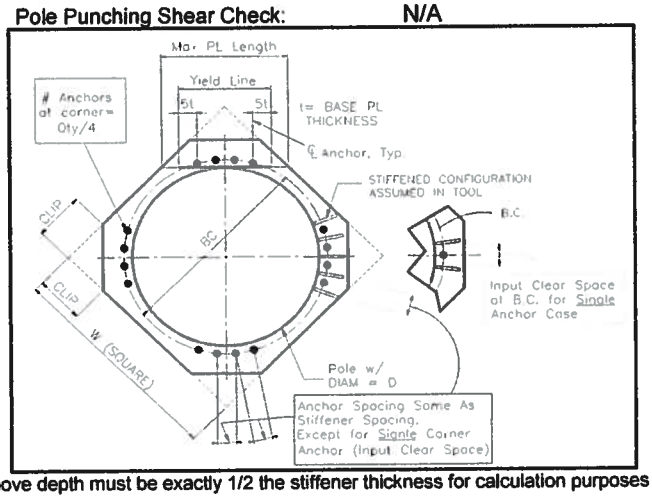

** Note: for complete joint penetration groove welds the groove depth must be exactly 1/2 the stiffener thickness for calculation purposes

CAISSON Version 10.40 10:24:30 AM Friday, November 09, 2012
Crown Castle USA

```
*****************************************************************************************
*                                                                                       *
* CAISSON - Pier Foundations Analysis and Design -  Copyright Power Line Systems, Inc. 1993-2010 *
*                                                                                       *
*****************************************************************************************
```

Project Title: BU #875358
Project Notes:

Calculation Method: Full 8CD

******* I N P U T D A T A

Pier Properties

Diameter (ft)	Distance of Top of Pier above Ground (ft)	Concrete Strength (ksi)	Steel Yield Strength (ksi)
6.00	1.00	4.00	60.00

Soil Properties

Layer	Type	Thickness (ft)	Depth at Top of Layer (ft)	Density (lbs/ft^3)	CU (psf)	KP	PHI (deg)
1	Clay	3.50	0.00	130.0			
2	Clay	1.50	3.50	130.0	3000.0		
3	Clay	10.00	5.00	145.0	20000.0		
4	Clay	5.00	15.00	150.0	30000.0		

Design (Factored) Loads at Top of Pier

Moment (ft-k)	Axial Load (kips)	Shear Load (kips)	Additional Safety Factor Against Soil Failure
1967.0	29.0	20.00	9.44

******* R E S U L T S

Calculated Pier Properties

Length (ft)	Weight (kips)	End Bearing Pressure (psf)
15.000	63.617	1025.7

Ultimate Resisting Forces Along Pier

Type	Distance of Top of Layer to Top of Pier (ft)	Thickness (ft)	Density (lbs/ft^3)	CU (psf)	KP	Force (kips)	Arm (ft)
Clay	1.00	3.50	130.0			0.00	2.75
Clay	4.50	1.50	130.0	3000.0		216.00	5.25
Clay	6.00	4.49	145.0	20000.0		4306.63	8.24
Clay	10.49	4.51	145.0	20000.0		-4333.35	12.74

Shear and Moments Along Pier

Distance below Top of Pier (ft)	Shear (with Safety Factor) (kips)	Moment (with Safety Factor) (ft-k)	Shear (without Safety Factor) (kips)	Moment (without Safety Factor) (ft-k)
0.00	189.3	18586.3	20.1	1968.9
1.50	189.3	18870.3	20.1	1999.0
3.00	189.3	19154.2	20.1	2029.0
4.50	189.3	19438.1	20.1	2059.1
6.00	-26.7	19560.0	-2.8	2072.0
7.50	-1466.7	18439.9	-155.4	1953.4
9.00	-2906.7	15159.9	-307.9	1605.9
10.50	-4320.0	9720.0	-457.6	1029.7
12.00	-2880.0	4320.0	-305.1	457.6
13.50	-1440.0	1080.0	-152.5	114.4
15.00	0.0	0.0	0.0	0.0

Date: **November 10, 2012**

Melanie Maina
Crown Castle
10170 Linn Station Road, Suite 525
Louisville, KY 40223

Crown Castle
2000 Corporate Drive
Canonsburg, PA 15317
(724) 416-2000

Subject: **Structural Analysis Report**

Carrier Designation:	***Sprint PCS* Co-Locate**	
	Carrier Site Number:	CB33XC096
	Carrier Site Name:	COFFMAN HIGH SCHOOL
Crown Castle Designation:	**Crown Castle BU Number:**	875358
	Crown Castle Site Name:	COFFMAN HIGH SCHOOL
	Crown Castle JDE Job Number:	193502
	Crown Castle Work Order Number:	545761
	Crown Castle Application Number:	167727 Rev. 1
Engineering Firm Designation:	**Crown Castle Project Number:**	545761
Site Data:	**6780 Coffman Road, Dublin, Franklin County, OH**	
	Latitude *40° 6' 35.39"*, Longitude *-83° 7' 41.04"*	
	140 Foot - Monopole Tower	

Dear Melanie Maina,

Crown Castle is pleased to submit this **"Structural Analysis Report"** to determine the structural integrity of the above mentioned tower. This analysis has been performed in accordance with the Crown Castle Structural 'Statement of Work' and the terms of Crown Castle Purchase Order Number 545761, in accordance with application 167727, revision 1.

The purpose of the analysis is to determine acceptability of the tower stress level. Based on our analysis we have determined the tower stress level for the structure and foundation, under the following load case, to be:

LC5: Existing + Proposed Equipment **Sufficient Capacity**
Note: See Table I and Table II for the proposed and existing loading, respectively.

The analysis has been performed in accordance with the TIA-222-G standard and local code requirements based upon a wind speed of 90 mph 3-second gust, exposure category C.

All modifications and equipment proposed in this report shall be installed in accordance with the attached drawings for the determined available structural capacity to be effective.

We at *Crown Castle* appreciate the opportunity of providing our continuing professional services to you and Crown Castle. If you have any questions or need further assistance on this or any other projects please give us a call.

Structural analysis prepared by: Manoj Pai M. / John Kazmierczak, E.I.T.

Respectfully submitted by:

STATE OF OHIO
JAMAL A. HUWEL
E-76490
REGISTERED
PROFESSIONAL ENGINEER
DATE NOV 10 2012
SIGNED

Jamal A. Huwel, P.E.
Manager Engineering

trxTower Report - version 6.0.4.0

TABLE OF CONTENTS

1) INTRODUCTION

2) ANALYSIS CRITERIA
- Table 1 - Proposed Antenna and Cable Information
- Table 2 - Existing Antenna and Cable Information
- Table 3 - Design Antenna and Cable Information

3) ANALYSIS PROCEDURE
- Table 4 - Documents Provided
- 3.1) Analysis Method
- 3.2) Assumptions

4) ANALYSIS RESULTS
- Table 5 - Section Capacity (Summary)
- Table 6 – Tower Components vs. Capacity
- 4.1) Recommendations

5) APPENDIX A
- tnxTower Output

6) APPENDIX B
- Base Level Drawing

7) APPENDIX C
- Additional Calculations

1) INTRODUCTION

This tower is a 140 ft Monopole tower designed by Summit Manufacturing, LLC in December of 1999. The tower was originally designed for a wind speed of 85 mph per Ohio Basic Buildin.

2) ANALYSIS CRITERIA

The structural analysis was performed for this tower in accordance with the requirements of TIA-222-G Structural Standards for Steel Antenna Towers and Antenna Supporting Structures using a 3-second gust wind speed of 90 mph with no ice, 40 mph with 0.75 inch ice thickness and 60 mph under service loads, exposure category C with topographic category 1 and crest height of 0 feet.

Table 1 - Proposed Antenna and Cable Information

Mounting Level (ft)	Center Line Elevation (ft)	Number of Antennas	Antenna Manufacturer	Antenna Model	Number of Feed Lines	Feed Line Size (in)	Note
120	123	3	kmw communications	ET-X-TS-70-15-62-18-iR-RD w/ Mount Pipe	3	1-5/8	-
		3	samsung telecommunications	RRH-C2A w/EXT FILTER			
		3	samsung telecommunications	RRH-P4			
	120	1	tower mounts	Miscellaneous [NA 507-1]			

Table 2 - Existing Antenna and Cable Information

Mounting Level (ft)	Center Line Elevation (ft)	Number of Antennas	Antenna Manufacturer	Antenna Model	Number of Feed Lines	Feed Line Size (in)	Note
140	148	1	rfs celwave	PD1151-5	1	7/8	1
134	134	1	north star lighting	STARBEAM-6	1	2	1
120	123	6	kathrein	742-215 w/ Mount Pipe	6	1-5/8	3
	120	1	tower mounts	Platform Mount [LP 714-1]	-	-	1
100	109	1	decibel	ASP-705	2	7/8	1
	103	1	sinclair	SD314-H			
	100	1	tower mounts	Side Arm Mount [SO 702-4]			
88	89	3	ems wireless	RR65-18-02DPL2 w/ Mount Pipe	6	1-5/8	2
	88	1	tower mounts	Platform Mount [LP 714-1]			

Notes:
1) Existing Equipment
2) Abandoned Equipment; considered in this analysis
3) Equipment to Be Removed; not considered in this analysis

Table 3 - Design Antenna and Cable Information

Mounting Level (ft)	Center Line Elevation (ft)	Number of Antennas	Antenna Manufacturer	Antenna Model	Number of Feed Lines	Feed Line Size (in)
140	140	1	generic	ASP-705	-	-
135	135	9	generic	Stadium Lights	-	-
130	130	12	swedcom	ALP-9212-N	-	-
120	120	9	rfs celwave	AP-199016	-	-
100	100	2	generic	ASP-700	-	-
80	80	12	swedcom	ALP-9212-N	-	-

3) ANALYSIS PROCEDURE

Table 4 - Documents Provided

Document	Remarks	Reference	Source
4-GEOTECHNICAL REPORTS	G2 Consulting Group	1519245	CCISITES
4-TOWER FOUNDATION DRAWINGS/DESIGN/SPECS	G2 Consulting Group	1433802	CCISITES
4-TOWER MANUFACTURER DRAWINGS	Summit Manufacturing, LLC / Paul J. Ford and Company	1610756	CCISITES

3.1) Analysis Method

tnxTower (version 6.0.4.0), a commercially available analysis software package, was used to create a three-dimensional model of the tower and calculate member stresses for various loading cases. Selected output from the analysis is included in Appendix A.

3.2) Assumptions

1) Tower and structures were built in accordance with the manufacturer's specifications.
2) The tower and structures have been maintained in accordance with the manufacturer's specification.
3) The configuration of antennas, transmission cables, mounts and other appurtenances are as specified in Tables 1 and 2 and the referenced drawings.

This analysis may be affected if any assumptions are not valid or have been made in error. Crown Castle should be notified to determine the effect on the structural integrity of the tower.

4) ANALYSIS RESULTS

Table 5 - Section Capacity (Summary)

Section No.	Elevation (ft)	Component Type	Size	Critical Element	P (K)	SF*P_allow (K)	% Capacity	Pass / Fail
L1	140 - 91.75	Pole	TP29.239x22x0.25	1	-7.760	1509.920	35.7	Pass
L2	91.75 - 45.5	Pole	TP35.678x28.176x0.313	2	-16.991	2486.200	56.8	Pass
L3	45.5 - 0	Pole	TP41.88x34.378x0.375	3	-28.415	3572.550	63.7	Pass
							Summary	
						Pole (L3)	63.7	Pass
						Rating =	63.7	Pass

Table 6 - Tower Component Stresses vs. Capacity – LC5

Notes	Component	Elevation (ft)	% Capacity	Pass / Fail
1	Anchor Rods	0	63.6	Pass
1	Base Plate	0	49.0	Pass
1	Base Foundation	0	38.2	Pass

Structure Rating (max from all components) =	**63.7%**

Notes:
1) See additional documentation in "Appendix C – Additional Calculations" for calculations supporting the % capacity consumed.

4.1) Recommendations

The tower and its foundation have sufficient capacity to carry the existing and proposed loads. No modifications are required at this time.

APPENDIX A

TNXTOWER OUTPUT

Section	Length (ft)	Number of Sides	Thickness (in)	Socket Length (ft)	Top Dia (in)	Bot Dia (in)	Grade	Weight (K)
1	48.250	18	0.250	3.750	22.000	29.239	A572-60	3.3
2	50.000	18	0.313	4.500	28.176	35.678	A572-65	5.3
3	50.000	18	0.375		34.378	41.880		7.6
								16.3

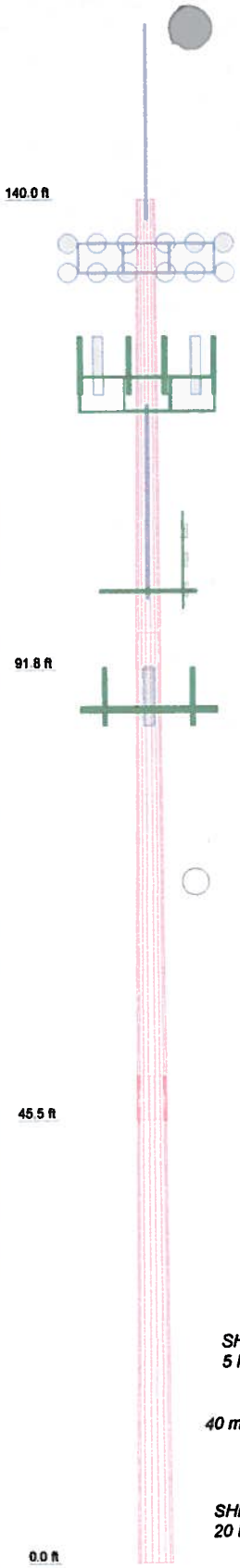

DESIGNED APPURTENANCE LOADING

TYPE	ELEVATION	TYPE	ELEVATION
PD1151-5	140	RRH-P4	120
4' x 2" Pipe Mount	140	RRH-P4	120
Sector Mount [SM 514-1]	134	RRH-P4	120
STARBEAM	134	RRH-C2A w/EXT FILTER	120
STARBEAM	134	RRH-C2A w/EXT FILTER	120
STARBEAM	134	RRH-C2A w/EXT FILTER	120
STARBEAM	134	Miscellaneous [NA 507-1]	120
STARBEAM	134	(2) 6' x 2" Mount Pipe	120
STARBEAM	134	(2) 6' x 2" Mount Pipe	120
STARBEAM	134	ASP-705	100
STARBEAM	134	SD314-H	100
STARBEAM	134	4' x 2" Pipe Mount	100
STARBEAM	134	4' x 2" Pipe Mount	100
STARBEAM	134	4' x 2" Pipe Mount	100
STARBEAM	134	4' x 2" Pipe Mount	100
(2) 6' x 2" Mount Pipe	120	Side Arm Mount [SO 702-4]	100
Platform Mount [LP 714-1]	120	Platform Mount [LP 714-1]	88
ET-X-TS-70-15-62-18-iR-RD w/ Mount Pipe	120	(2) 6' x 2" Mount Pipe	88
		RR65-18-02DPL2 w/ Mount Pipe	88
ET-X-TS-70-15-62-18-iR-RD w/ Mount Pipe	120	RR65-18-02DPL2 w/ Mount Pipe	88
		RR65-18-02DPL2 w/ Mount Pipe	88
ET-X-TS-70-15-62-18-iR-RD w/ Mount Pipe	120	(2) 6' x 2" Mount Pipe	88
		(2) 6' x 2" Mount Pipe	88

MATERIAL STRENGTH

GRADE	Fy	Fu	GRADE	Fy	Fu
A572-60	60 ksi	75 ksi	A572-65	65 ksi	80 ksi

TOWER DESIGN NOTES

1. Tower is located in Franklin County, Ohio.
2. Tower designed for Exposure C to the TIA-222-G Standard.
3. Tower designed for a 90 mph basic wind in accordance with the TIA-222-G Standard.
4. Tower is also designed for a 40 mph basic wind with 0.75 in ice. Ice is considered to increase in thickness with height.
5. Deflections are based upon a 60 mph wind.
6. Tower Structure Class II.
7. Topographic Category 1 with Crest Height of 0.000 ft
8. TOWER RATING: 63.7%

ALL REACTIONS ARE FACTORED

AXIAL 48 K

SHEAR 5 K *MOMENT 455 kip-ft*

TORQUE 2 kip-ft
40 mph WIND - 0.750 in ICE

AXIAL 28 K

SHEAR 20 K *MOMENT 1915 kip-ft*

TORQUE 7 kip-ft
REACTIONS - 90 mph WIND

CROWN CASTLE
We Are Solutions

Crown Castle
2000 Corporate Drive
Canonsburg, PA 15317
Phone: (724) 416-2000
FAX: (724) 416-2254

Job: *BU #875358*			
Project:			
Client: Crown Castle	Drawn by: JKazmierczak	App'd:	
Code: TIA-222-G	Date: 11/09/12	Scale: N	
Path: R:\RA Models - Letters\Work Area\JKazmierczak\875358\CAD\Final\875358.rd		Dwg No.	

Tower Input Data

There is a pole section.
This tower is designed using the TIA-222-G standard.
The following design criteria apply:

4) Tower is located in Franklin County, Ohio.
5) Basic wind speed of 90 mph.
6) Structure Class II.
7) Exposure Category C.
8) Topographic Category 1.
9) Crest Height 0.000 ft.
10) Nominal ice thickness of 0.750 in.
11) Ice thickness is considered to increase with height.
12) Ice density of 56.000 pcf.
13) A wind speed of 40 mph is used in combination with ice.
14) Temperature drop of 50.000 °F.
15) Deflections calculated using a wind speed of 60 mph.
16) A non-linear (P-delta) analysis was used.
17) Pressures are calculated at each section.
18) Stress ratio used in pole design is 1.
19) Local bending stresses due to climbing loads, feedline supports, and appurtenance mounts are not considered.

Options

Consider Moments - Legs
Consider Moments - Horizontals
Consider Moments - Diagonals
Use Moment Magnification
√ Use Code Stress Ratios
√ Use Code Safety Factors - Guys
Escalate Ice
Always Use Max Kz
Use Special Wind Profile
Include Bolts In Member Capacity
Leg Bolts Are At Top Of Section
Secondary Horizontal Braces Leg
Use Diamond Inner Bracing (4 Sided)
Add IBC .6D+W Combination

Distribute Leg Loads As Uniform
Assume Legs Pinned
√ Assume Rigid Index Plate
√ Use Clear Spans For Wind Area
Use Clear Spans For KL/r
Retension Guys To Initial Tension
√ Bypass Mast Stability Checks
√ Use Azimuth Dish Coefficients
√ Project Wind Area of Appurt.
Autocalc Torque Arm Areas
SR Members Have Cut Ends
Sort Capacity Reports By Component
Triangulate Diamond Inner Bracing

Treat Feedline Bundles As Cylinder
Use ASCE 10 X-Brace Ly Rules
Calculate Redundant Bracing Forces
Ignore Redundant Members in FEA
SR Leg Bolts Resist Compression
All Leg Panels Have Same Allowable
Offset Girt At Foundation
√ Consider Feedline Torque
Include Angle Block Shear Check
Poles
√ Include Shear-Torsion Interaction
Always Use Sub-Critical Flow
Use Top Mounted Sockets

Tapered Pole Section Geometry

Section	Elevation ft	Section Length ft	Splice Length ft	Number of Sides	Top Diameter in	Bottom Diameter in	Wall Thickness in	Bend Radius in	Pole Grade
L1	140.000-91.750	48.250	3.750	18	22.000	29.239	0.250	1.000	A572-60 (60 ksi)
L2	91.750-45.500	50.000	4.500	18	28.176	35.678	0.313	1.250	A572-65 (65 ksi)
L3	45.500-0.000	50.000		18	34.378	41.880	0.375	1.500	A572-65 (65 ksi)

Tapered Pole Properties

Section	Tip Dia. in	Area in^2	I in^4	r in	C in	I/C in^3	J in^4	It/Q in^2	w in	w/t
L1	22.339	17.259	1031.483	7.721	11.176	92.294	2064.324	8.631	3.432	13.728
	29.690	23.003	2442.216	10.291	14.853	164.421	4887.646	11.504	4.706	18.824
L2	29.182	27.637	2710.936	9.892	14.314	189.396	5425.440	13.821	4.409	14.109
	36.228	35.078	5542.859	12.555	18.124	305.823	11093.011	17.542	5.729	18.334
L3	35.594	40.472	5911.827	12.071	17.464	338.516	11831.434	20.240	5.391	14.375
	42.526	49.401	10751.694	14.734	21.275	505.367	21517.535	24.705	6.711	17.896

Tower Elevation ft	Gusset Area (per face) ft^2	Gusset Thickness in	Gusset Grade	Adjust. Factor A_f	Adjust. Factor A_r	Weight Mult.	Double Angle Stitch Bolt Spacing Diagonals in	Double Angle Stitch Bolt Spacing Horizontals in
L1 140.000-91.750				1	1	1		
L2 91.750-45.500				1	1	1		
L3 45.500-0.000				1	1	1		

Feed Line/Linear Appurtenances - Entered As Round Or Flat

Description	Sector	Component Type	Placement ft	Total Number	Number Per Row	Start/End Position	Width or Diameter in	Perimeter in	Weight klf
TYPE 7(1 5/8") ***	A	Surface Ar (CaAa)	120.000 - 0.000	3	3	0.100 0.200	1.690		0.002

Feed Line/Linear Appurtenances - Entered As Area

Description	Face or Leg	Allow Shield	Component Type	Placement ft	Total Number		C_AA_A ft^2/ft	Weight klf
LDF5-50A(7/8") ***	A	No	Inside Pole	140.000 - 0.000	1	No Ice 1/2" Ice 1" Ice	0.000 0.000 0.000	0.000 0.000 0.000
WC166(2") *** ***	C	No	Inside Pole	134.000 - 0.000	1	No Ice 1/2" Ice 1" Ice	0.000 0.000 0.000	0.003 0.003 0.003
LDF5-50A(7/8") ***	A	No	Inside Pole	100.000 - 0.000	2	No Ice 1/2" Ice 1" Ice	0.000 0.000 0.000	0.000 0.000 0.000
LDF7-50A(1-5/8") ***	A	No	Inside Pole	88.000 - 0.000	6	No Ice 1/2" Ice 1" Ice	0.000 0.000 0.000	0.001 0.001 0.001

Feed Line/Linear Appurtenances Section Areas

Tower Section	Tower Elevation ft	Face	A_R ft^2	A_F ft^2	C_AA_A In Face ft^2	C_AA_A Out Face ft^2	Weight K
L1	140.000-91.750	A	0.000	0.000	14.323	0.000	0.208
		B	0.000	0.000	0.000	0.000	0.000
		C	0.000	0.000	0.000	0.000	0.118

Tower Section	Tower Elevation ft	Face	A_R ft^2	A_F ft^2	C_AA_A In Face ft^2	C_AA_A Out Face ft^2	Weight K
L2	91.750-45.500	A	0.000	0.000	23.449	0.000	0.560
		B	0.000	0.000	0.000	0.000	0.000
		C	0.000	0.000	0.000	0.000	0.130
L3	45.500-0.000	A	0.000	0.000	23.069	0.000	0.569
		B	0.000	0.000	0.000	0.000	0.000
		C	0.000	0.000	0.000	0.000	0.127

Feed Line/Linear Appurtenances Section Areas - With Ice

Tower Section	Tower Elevation ft	Face or Leg	Ice Thickness in	A_R ft^2	A_F ft^2	C_AA_A In Face ft^2	C_AA_A Out Face ft^2	Weight K
L1	140.000-91.750	A	1.699	0.000	0.000	29.906	0.000	0.546
		B		0.000	0.000	0.000	0.000	0.000
		C		0.000	0.000	0.000	0.000	0.118
L2	91.750-45.500	A	1.613	0.000	0.000	48.961	0.000	1.114
		B		0.000	0.000	0.000	0.000	0.000
		C		0.000	0.000	0.000	0.000	0.130
L3	45.500-0.000	A	1.447	0.000	0.000	47.183	0.000	1.080
		B		0.000	0.000	0.000	0.000	0.000
		C		0.000	0.000	0.000	0.000	0.127

Feed Line Center of Pressure

Section	Elevation ft	CP_X in	CP_Z in	CP_X Ice in	CP_Z Ice in
L1	140.000-91.750	-0.290	-0.322	-0.434	-0.482
L2	91.750-45.500	-0.445	-0.494	-0.638	-0.709
L3	45.500-0.000	-0.453	-0.503	-0.673	-0.747

Shielding Factor Ka

Tower Section	Feed Line Record No.	Description	Feed Line Segment Elev.	K_a No Ice	K_a Ice
L1	6	TYPE 7(1 5/8")	91.75 - 120.00	1.0000	1.0000
L2	6	TYPE 7(1 5/8")	45.50 - 91.75	1.0000	1.0000

Discrete Tower Loads

Description	Face or Leg	Offset Type	Offsets: Horz Lateral Vert ft ft ft	Azimuth Adjustment °	Placement ft	C_AA_A Front ft^2	C_AA_A Side ft^2	Weight K

Description	Face or Leg	Offset Type	Offsets: Horz Lateral Vert ft ft ft	Azimuth Adjustment °	Placement ft		C_AA_A Front ft^2	C_AA_A Side ft^2	Weight K
PD1151-5	A	From Leg	0.000 0.000 8.000	0.000	140.000	No Ice 1/2" Ice 1" Ice	3.987 5.469 6.967	3.987 5.469 6.967	0.015 0.044 0.083
4' x 2" Pipe Mount	A	From Leg	0.000 0.000 2.000	0.000	140.000	No Ice 1/2" Ice 1" Ice	0.785 1.028 1.281	0.785 1.028 1.281	0.029 0.035 0.044
***									
Sector Mount [SM 514-1]	A	From Leg	1.000 0.000 0.000	0.000	134.000	No Ice 1/2" Ice 1" Ice	21.260 30.390 39.520	27.040 40.100 53.160	0.448 0.747 1.046
***									
ET-X-TS-70-15-62-18-iR-RD w/ Mount Pipe	A	From Leg	4.000 0.000 3.000	0.000	120.000	No Ice 1/2" Ice 1" Ice	8.704 9.367 10.000	6.487 7.687 8.618	0.068 0.132 0.207
ET-X-TS-70-15-62-18-iR-RD w/ Mount Pipe	B	From Leg	4.000 0.000 3.000	0.000	120.000	No Ice 1/2" Ice 1" Ice	8.704 9.367 10.000	6.487 7.687 8.618	0.068 0.132 0.207
ET-X-TS-70-15-62-18-iR-RD w/ Mount Pipe	C	From Leg	4.000 0.000 3.000	0.000	120.000	No Ice 1/2" Ice 1" Ice	8.704 9.367 10.000	6.487 7.687 8.618	0.068 0.132 0.207
RRH-P4	A	From Leg	4.000 0.000 3.000	0.000	120.000	No Ice 1/2" Ice 1" Ice	3.191 3.439 3.696	2.075 2.292 2.517	0.060 0.083 0.109
RRH-P4	B	From Leg	4.000 0.000 3.000	0.000	120.000	No Ice 1/2" Ice 1" Ice	3.191 3.439 3.696	2.075 2.292 2.517	0.060 0.083 0.109
RRH-P4	C	From Leg	4.000 0.000 3.000	0.000	120.000	No Ice 1/2" Ice 1" Ice	3.191 3.439 3.696	2.075 2.292 2.517	0.060 0.083 0.109
RRH-C2A w/EXT FILTER	A	From Leg	4.000 0.000 3.000	0.000	120.000	No Ice 1/2" Ice 1" Ice	3.628 3.887 4.156	1.550 1.752 1.962	0.055 0.077 0.103
RRH-C2A w/EXT FILTER	B	From Leg	4.000 0.000 3.000	0.000	120.000	No Ice 1/2" Ice 1" Ice	3.628 3.887 4.156	1.550 1.752 1.962	0.055 0.077 0.103
RRH-C2A w/EXT FILTER	C	From Leg	4.000 0.000 3.000	0.000	120.000	No Ice 1/2" Ice 1" Ice	3.628 3.887 4.156	1.550 1.752 1.962	0.055 0.077 0.103
Miscellaneous [NA 507-1]	C	None		0.000	120.000	No Ice 1/2" Ice 1" Ice	4.800 6.700 8.600	4.800 6.700 8.600	0.245 0.294 0.343
(2) 6' x 2" Mount Pipe	A	From Leg	4.000 0.000 3.000	0.000	120.000	No Ice 1/2" Ice 1" Ice	1.425 1.925 2.294	1.425 1.925 2.294	0.022 0.033 0.048
(2) 6' x 2" Mount Pipe	B	From Leg	4.000 0.000 3.000	0.000	120.000	No Ice 1/2" Ice 1" Ice	1.425 1.925 2.294	1.425 1.925 2.294	0.022 0.033 0.048
(2) 6' x 2" Mount Pipe	C	From Leg	4.000 0.000 3.000	0.000	120.000	No Ice 1/2" Ice	1.425 1.925 2.294	1.425 1.925 2.294	0.022 0.033 0.048

Description	Face or Leg	Offset Type	Offsets: Horz Lateral Vert ft ft ft	Azimuth Adjustment °	Placement ft		C_AA_A Front ft^2	C_AA_A Side ft^2	Weight K
Platform Mount [LP 714-1]	C	None		0.000	120.000	1" Ice No Ice 1/2" Ice 1" Ice	37.470 44.230 50.990	37.470 44.230 50.990	1.600 2.040 2.480
***									
ASP-705	A	From Leg	3.000 0.000 9.000	0.000	100.000	No Ice 1/2" Ice 1" Ice	5.880 8.012 10.160	5.880 8.012 10.160	0.025 0.068 0.124
SD314-H	B	From Leg	3.000 0.000 3.000	60.000	100.000	No Ice 1/2" Ice 1" Ice	4.290 6.150 8.010	4.290 6.150 8.010	0.021 0.057 0.094
4' x 2" Pipe Mount	A	From Leg	3.000 0.000 0.000	0.000	100.000	No Ice 1/2" Ice 1" Ice	0.785 1.028 1.281	0.785 1.028 1.281	0.029 0.035 0.044
4' x 2" Pipe Mount	B	From Leg	3.000 0.000 0.000	-30.000	100.000	No Ice 1/2" Ice 1" Ice	0.785 1.028 1.281	0.785 1.028 1.281	0.029 0.035 0.044
4' x 2" Pipe Mount	B	From Leg	3.000 0.000 0.000	60.000	100.000	No Ice 1/2" Ice 1" Ice	0.785 1.028 1.281	0.785 1.028 1.281	0.029 0.035 0.044
4' x 2" Pipe Mount	C	From Leg	3.000 0.000 0.000	30.000	100.000	No Ice 1/2" Ice 1" Ice	0.785 1.028 1.281	0.785 1.028 1.281	0.029 0.035 0.044
Side Arm Mount [SO 702-4]	C	None		0.000	100.000	No Ice 1/2" Ice 1" Ice	4.860 6.600 8.340	4.860 6.600 8.340	0.108 0.152 0.196
***									
RR65-18-02DPL2 w/ Mount Pipe	A	From Leg	4.000 0.000 1.000	0.000	88.000	No Ice 1/2" Ice 1" Ice	4.593 5.088 5.578	3.319 4.089 4.784	0.034 0.069 0.114
RR65-18-02DPL2 w/ Mount Pipe	B	From Leg	4.000 0.000 1.000	0.000	88.000	No Ice 1/2" Ice 1" Ice	4.593 5.088 5.578	3.319 4.089 4.784	0.034 0.069 0.114
RR65-18-02DPL2 w/ Mount Pipe	C	From Leg	4.000 0.000 1.000	0.000	88.000	No Ice 1/2" Ice 1" Ice	4.593 5.088 5.578	3.319 4.089 4.784	0.034 0.069 0.114
(2) 6' x 2" Mount Pipe	A	From Leg	4.000 0.000 1.000	0.000	88.000	No Ice 1/2" Ice 1" Ice	1.425 1.925 2.294	1.425 1.925 2.294	0.022 0.033 0.048
(2) 6' x 2" Mount Pipe	B	From Leg	4.000 0.000 1.000	0.000	88.000	No Ice 1/2" Ice 1" Ice	1.425 1.925 2.294	1.425 1.925 2.294	0.022 0.033 0.048
(2) 6' x 2" Mount Pipe	C	From Leg	4.000 0.000 1.000	0.000	88.000	No Ice 1/2" Ice 1" Ice	1.425 1.925 2.294	1.425 1.925 2.294	0.022 0.033 0.048
Platform Mount [LP 714-1]	C	None		0.000	88.000	No Ice 1/2" Ice 1" Ice	37.470 44.230 50.990	37.470 44.230 50.990	1.600 2.040 2.480
***									

Dishes

Description	Face or Leg	Dish Type	Offset Type	Offsets: Horz Lateral Vert ft	Azimuth Adjustment °	3 dB Beam Width °	Elevation ft	Outside Diameter ft		Aperture Area ft^2	Weight K
STARBEAM	A	Paraboloid w/Shroud (HP)	From Leg	2.000 2.000 1.500	0.000		134.000	2.000	No Ice 1/2" Ice 1" Ice	3.142 3.409 3.676	0.048 0.084 0.120
STARBEAM	A	Paraboloid w/Shroud (HP)	From Leg	2.000 5.000 1.500	0.000		134.000	2.000	No Ice 1/2" Ice 1" Ice	3.142 3.409 3.676	0.048 0.084 0.120
STARBEAM	A	Paraboloid w/Shroud (HP)	From Leg	2.000 8.000 1.500	0.000		134.000	2.000	No Ice 1/2" Ice 1" Ice	3.142 3.409 3.676	0.048 0.084 0.120
STARBEAM	A	Paraboloid w/Shroud (HP)	From Leg	2.000 -2.000 1.500	0.000		134.000	2.000	No Ice 1/2" Ice 1" Ice	3.142 3.409 3.676	0.048 0.084 0.120
STARBEAM	A	Paraboloid w/Shroud (HP)	From Leg	2.000 -5.000 1.500	0.000		134.000	2.000	No Ice 1/2" Ice 1" Ice	3.142 3.409 3.676	0.048 0.084 0.120
STARBEAM	A	Paraboloid w/Shroud (HP)	From Leg	2.000 -8.000 1.500	0.000		134.000	2.000	No Ice 1/2" Ice 1" Ice	3.142 3.409 3.676	0.048 0.084 0.120
STARBEAM	A	Paraboloid w/Shroud (HP)	From Leg	2.000 2.000 -1.500	0.000		134.000	2.000	No Ice 1/2" Ice 1" Ice	3.142 3.409 3.676	0.048 0.084 0.120
STARBEAM	A	Paraboloid w/Shroud (HP)	From Leg	2.000 5.000 -1.500	0.000		134.000	2.000	No Ice 1/2" Ice 1" Ice	3.142 3.409 3.676	0.048 0.084 0.120
STARBEAM	A	Paraboloid w/Shroud (HP)	From Leg	2.000 8.000 -1.500	0.000		134.000	2.000	No Ice 1/2" Ice 1" Ice	3.142 3.409 3.676	0.048 0.084 0.120
STARBEAM	A	Paraboloid w/Shroud (HP)	From Leg	2.000 -2.000 -1.500	0.000		134.000	2.000	No Ice 1/2" Ice 1" Ice	3.142 3.409 3.676	0.048 0.084 0.120
STARBEAM	A	Paraboloid w/Shroud (HP)	From Leg	2.000 -5.000 -1.500	0.000		134.000	2.000	No Ice 1/2" Ice 1" Ice	3.142 3.409 3.676	0.048 0.084 0.120
STARBEAM	A	Paraboloid w/Shroud (HP)	From Leg	2.000 -8.000 -1.500	0.000		134.000	2.000	No Ice 1/2" Ice 1" Ice	3.142 3.409 3.676	0.048 0.084 0.120

Load Combinations

Comb. No.	Description
1	Dead Only
2	1.2 Dead+1.6 Wind 0 deg - No Ice
3	0.9 Dead+1.6 Wind 0 deg - No Ice
4	1.2 Dead+1.6 Wind 30 deg - No Ice
5	0.9 Dead+1.6 Wind 30 deg - No Ice
6	1.2 Dead+1.6 Wind 60 deg - No Ice
7	0.9 Dead+1.6 Wind 60 deg - No Ice
8	1.2 Dead+1.6 Wind 90 deg - No Ice
9	0.9 Dead+1.6 Wind 90 deg - No Ice
10	1.2 Dead+1.6 Wind 120 deg - No Ice
11	0.9 Dead+1.6 Wind 120 deg - No Ice
12	1.2 Dead+1.6 Wind 150 deg - No Ice
13	0.9 Dead+1.6 Wind 150 deg - No Ice
14	1.2 Dead+1.6 Wind 180 deg - No Ice

Comb. No.	Description
15	0.9 Dead+1.6 Wind 180 deg - No Ice
16	1.2 Dead+1.6 Wind 210 deg - No Ice
17	0.9 Dead+1.6 Wind 210 deg - No Ice
18	1.2 Dead+1.6 Wind 240 deg - No Ice
19	0.9 Dead+1.6 Wind 240 deg - No Ice
20	1.2 Dead+1.6 Wind 270 deg - No Ice
21	0.9 Dead+1.6 Wind 270 deg - No Ice
22	1.2 Dead+1.6 Wind 300 deg - No Ice
23	0.9 Dead+1.6 Wind 300 deg - No Ice
24	1.2 Dead+1.6 Wind 330 deg - No Ice
25	0.9 Dead+1.6 Wind 330 deg - No Ice
26	1.2 Dead+1.0 Ice+1.0 Temp
27	1.2 Dead+1.0 Wind 0 deg+1.0 Ice+1.0 Temp
28	1.2 Dead+1.0 Wind 30 deg+1.0 Ice+1.0 Temp
29	1.2 Dead+1.0 Wind 60 deg+1.0 Ice+1.0 Temp
30	1.2 Dead+1.0 Wind 90 deg+1.0 Ice+1.0 Temp
31	1.2 Dead+1.0 Wind 120 deg+1.0 Ice+1.0 Temp
32	1.2 Dead+1.0 Wind 150 deg+1.0 Ice+1.0 Temp
33	1.2 Dead+1.0 Wind 180 deg+1.0 Ice+1.0 Temp
34	1.2 Dead+1.0 Wind 210 deg+1.0 Ice+1.0 Temp
35	1.2 Dead+1.0 Wind 240 deg+1.0 Ice+1.0 Temp
36	1.2 Dead+1.0 Wind 270 deg+1.0 Ice+1.0 Temp
37	1.2 Dead+1.0 Wind 300 deg+1.0 Ice+1.0 Temp
38	1.2 Dead+1.0 Wind 330 deg+1.0 Ice+1.0 Temp
39	Dead+Wind 0 deg - Service
40	Dead+Wind 30 deg - Service
41	Dead+Wind 60 deg - Service
42	Dead+Wind 90 deg - Service
43	Dead+Wind 120 deg - Service
44	Dead+Wind 150 deg - Service
45	Dead+Wind 180 deg - Service
46	Dead+Wind 210 deg - Service
47	Dead+Wind 240 deg - Service
48	Dead+Wind 270 deg - Service
49	Dead+Wind 300 deg - Service
50	Dead+Wind 330 deg - Service

Maximum Member Forces

Section No.	Elevation ft	Component Type	Condition	Gov. Load Comb.	Axial K	Major Axis Moment kip-ft	Minor Axis Moment kip-ft
L1	140 - 91.75	Pole	Max Tension	14	0.000	0.001	0.000
			Max. Compression	26	-18.141	-0.345	11.423
			Max. Mx	8	-7.884	-279.712	10.832
			Max. My	14	-7.760	-0.011	-310.170
			Max. Vy	20	-10.443	279.618	10.832
			Max. Vx	14	11.335	-0.011	-310.170
			Max. Torque	20			-6.879
L2	91.75 - 45.5	Pole	Max Tension	1	0.000	0.000	0.000
			Max. Compression	26	-33.270	0.520	13.229
			Max. Mx	20	-17.072	922.704	20.904
			Max. My	14	-16.991	0.300	-993.614
			Max. Vy	20	-16.079	922.704	20.904
			Max. Vx	14	16.976	0.300	-993.614
			Max. Torque	20			-6.877
L3	45.5 - 0	Pole	Max Tension	1	0.000	0.000	0.000
			Max. Compression	26	-48.431	1.609	14.757
			Max. Mx	20	-28.417	1801.313	31.447
			Max. My	14	-28.415	0.744	-1915.266
			Max. Vy	20	-18.833	1801.313	31.447
			Max. Vx	14	19.686	0.744	-1915.266
			Max. Torque	20			-6.856

Maximum Reactions

Location	Condition	Gov. Load Comb.	Vertical K	Horizontal, X K	Horizontal, Z K
Pole	Max. Vert	27	48.431	0.000	4.439
	Max. H_x	20	28.435	18.805	0.192
	Max. H_z	2	28.435	-0.000	19.223
	Max. M_x	2	1863.498	-0.000	19.223
	Max. M_z	8	1799.841	-18.805	0.192
	Max. Torsion	8	6.846	-18.805	0.192
	Min. Vert	11	21.327	-15.979	-10.381
	Min. H_x	8	28.435	-18.805	0.192
	Min. H_z	14	28.435	-0.000	-19.656
	Min. M_x	14	-1915.266	-0.000	-19.656
	Min. M_z	20	-1801.313	18.805	0.192
	Min. Torsion	20	-6.846	18.805	0.192

Tower Mast Reaction Summary

Load Combination	Vertical K	$Shear_x$ K	$Shear_z$ K	Overturning Moment, M_x kip-ft	Overturning Moment, M_z kip-ft	Torque kip-ft
Dead Only	23.696	0.000	0.000	-3.637	0.606	0.000
1.2 Dead+1.6 Wind 0 deg - No Ice	28.435	0.000	-19.223	-1863.498	0.744	0.810
0.9 Dead+1.6 Wind 0 deg - No Ice	21.327	0.000	-19.223	-1842.535	0.553	0.808
1.2 Dead+1.6 Wind 30 deg - No Ice	28.435	9.162	-16.784	-1633.627	-865.688	-2.056
0.9 Dead+1.6 Wind 30 deg - No Ice	21.327	9.162	-16.784	-1615.074	-856.757	-2.057
1.2 Dead+1.6 Wind 60 deg - No Ice	28.435	16.103	-9.969	-984.237	-1532.915	-5.049
0.9 Dead+1.6 Wind 60 deg - No Ice	21.327	16.103	-9.969	-972.548	-1516.895	-5.049
1.2 Dead+1.6 Wind 90 deg - No Ice	28.435	18.805	-0.192	-31.445	-1799.841	-6.846
0.9 Dead+1.6 Wind 90 deg - No Ice	21.327	18.805	-0.192	-29.953	-1780.947	-6.844
1.2 Dead+1.6 Wind 120 deg - No Ice	28.435	15.979	10.381	1033.325	-1515.455	-5.118
0.9 Dead+1.6 Wind 120 deg - No Ice	21.327	15.979	10.381	1023.238	-1499.661	-5.115
1.2 Dead+1.6 Wind 150 deg - No Ice	28.435	9.265	17.230	1687.360	-880.056	-3.371
0.9 Dead+1.6 Wind 150 deg - No Ice	21.327	9.265	17.230	1670.362	-870.956	-3.368
1.2 Dead+1.6 Wind 180 deg - No Ice	28.435	0.000	19.656	1915.266	0.744	-0.810
0.9 Dead+1.6 Wind 180 deg - No Ice	21.327	0.000	19.656	1895.887	0.553	-0.808
1.2 Dead+1.6 Wind 210 deg - No Ice	28.435	-9.265	17.230	1687.354	881.540	1.968
0.9 Dead+1.6 Wind 210 deg - No Ice	21.327	-9.265	17.230	1670.358	872.059	1.969
1.2 Dead+1.6 Wind 240 deg - No Ice	28.435	-15.979	10.381	1033.318	1516.932	4.306
0.9 Dead+1.6 Wind 240 deg - No Ice	21.327	-15.979	10.381	1023.233	1500.758	4.305
1.2 Dead+1.6 Wind 270 deg - No Ice	28.435	-18.805	-0.192	-31.445	1801.313	6.846
0.9 Dead+1.6 Wind 270 deg - No Ice	21.327	-18.805	-0.192	-29.953	1782.041	6.845
1.2 Dead+1.6 Wind 300 deg - No Ice	28.435	-16.103	-9.969	-984.230	1534.391	5.861
0.9 Dead+1.6 Wind 300 deg	21.327	-16.103	-9.969	-972.544	1517.992	5.858

Load Combination	Vertical K	$Shear_x$ K	$Shear_z$ K	Overturning Moment, M_x kip-ft	Overturning Moment, M_z kip-ft	Torque kip-ft
- No Ice						
1.2 Dead+1.6 Wind 330 deg - No Ice	28.435	-9.162	-16.784	-1633.621	867.172	3.460
0.9 Dead+1.6 Wind 330 deg - No Ice	21.327	-9.162	-16.784	-1615.069	857.860	3.457
1.2 Dead+1.0 Ice+1.0 Temp	48.431	-0.000	-0.000	-14.757	1.609	0.001
1.2 Dead+1.0 Wind 0 deg+1.0 Ice+1.0 Temp	48.431	-0.000	-4.439	-455.162	1.614	0.248
1.2 Dead+1.0 Wind 30 deg+1.0 Ice+1.0 Temp	48.431	2.182	-3.866	-399.389	-213.010	-0.491
1.2 Dead+1.0 Wind 60 deg+1.0 Ice+1.0 Temp	48.431	3.817	-2.277	-243.430	-375.664	-1.207
1.2 Dead+1.0 Wind 90 deg+1.0 Ice+1.0 Temp	48.431	4.441	-0.031	-19.338	-439.017	-1.624
1.2 Dead+1.0 Wind 120 deg+1.0 Ice+1.0 Temp	48.431	3.797	2.343	223.619	-372.734	-1.334
1.2 Dead+1.0 Wind 150 deg+1.0 Ice+1.0 Temp	48.431	2.199	3.938	380.387	-215.447	-0.905
1.2 Dead+1.0 Wind 180 deg+1.0 Ice+1.0 Temp	48.431	-0:000	4.509	435.834	1.614	-0.247
1.2 Dead+1.0 Wind 210 deg+1.0 Ice+1.0 Temp	48.431	-2.199	3.938	380.386	218.673	0.477
1.2 Dead+1.0 Wind 240 deg+1.0 Ice+1.0 Temp	48.431	-3.797	2.343	223.618	375.960	1.087
1.2 Dead+1.0 Wind 270 deg+1.0 Ice+1.0 Temp	48.431	-4.441	-0.031	-19.338	442.242	1.625
1.2 Dead+1.0 Wind 300 deg+1.0 Ice+1.0 Temp	48.431	-3.817	-2.277	-243.429	378.890	1.455
1.2 Dead+1.0 Wind 330 deg+1.0 Ice+1.0 Temp	48.431	-2.182	-3.866	-399.388	216.237	0.920
Dead+Wind 0 deg - Service	23.696	0.000	-4.778	-462.990	0.612	0.203
Dead+Wind 30 deg - Service	23.696	2.277	-4.171	-406.183	-213.458	-0.516
Dead+Wind 60 deg - Service	23.696	4.002	-2.478	-245.732	-378.288	-1.267
Dead+Wind 90 deg - Service	23.696	4.674	-0.048	-10.353	-444.217	-1.715
Dead+Wind 120 deg - Service	23.696	3.971	2.580	252.679	-373.995	-1.281
Dead+Wind 150 deg - Service	23.696	2.303	4.282	414.319	-217.031	-0.845
Dead+Wind 180 deg - Service	23.696	0.000	4.885	470.648	0.612	-0.203
Dead+Wind 210 deg - Service	23.696	-2.303	4.282	414.318	218.255	0.493
Dead+Wind 240 deg - Service	23.696	-3.971	2.580	252.679	375.218	1.078
Dead+Wind 270 deg - Service	23.696	-4.674	-0.048	-10.353	445.440	1.716
Dead+Wind 300 deg - Service	23.696	-4.002	-2.478	-245.732	379.511	1.469
Dead+Wind 330 deg - Service	23.696	-2.277	-4.171	-406.183	214.681	0.868

Solution Summary

	Sum of Applied Forces			Sum of Reactions			
Load Comb.	PX K	PY K	PZ K	PX K	PY K	PZ K	% Error
1	0.000	-23.696	0.000	0.000	23.696	0.000	0.000%
2	0.000	-28.435	-19.223	-0.000	28.435	19.223	0.000%
3	0.000	-21.327	-19.223	-0.000	21.327	19.223	0.000%
4	9.162	-28.435	-16.784	-9.162	28.435	16.784	0.000%
5	9.162	-21.327	-16.784	-9.162	21.327	16.784	0.000%
6	16.103	-28.435	-9.969	-16.103	28.435	9.969	0.000%
7	16.103	-21.327	-9.969	-16.103	21.327	9.969	0.000%
8	18.805	-28.435	-0.192	-18.805	28.435	0.192	0.000%
9	18.805	-21.327	-0.192	-18.805	21.327	0.192	0.000%
10	15.979	-28.435	10.381	-15.979	28.435	-10.381	0.000%

Load Comb.	Sum of Applied Forces PX K	PY K	PZ K	Sum of Reactions PX K	PY K	PZ K	% Error
11	15.979	-21.327	10.381	-15.979	21.327	-10.381	0.000%
12	9.265	-28.435	17.230	-9.265	28.435	-17.230	0.000%
13	9.265	-21.327	17.230	-9.265	21.327	-17.230	0.000%
14	0.000	-28.435	19.656	-0.000	28.435	-19.656	0.000%
15	0.000	-21.327	19.656	-0.000	21.327	-19.656	0.000%
16	-9.265	-28.435	17.230	9.265	28.435	-17.230	0.000%
17	-9.265	-21.327	17.230	9.265	21.327	-17.230	0.000%
18	-15.979	-28.435	10.381	15.979	28.435	-10.381	0.000%
19	-15.979	-21.327	10.381	15.979	21.327	-10.381	0.000%
20	-18.805	-28.435	-0.192	18.805	28.435	0.192	0.000%
21	-18.805	-21.327	-0.192	18.805	21.327	0.192	0.000%
22	-16.103	-28.435	-9.969	16.103	28.435	9.969	0.000%
23	-16.103	-21.327	-9.969	16.103	21.327	9.969	0.000%
24	-9.162	-28.435	-16.784	9.162	28.435	16.784	0.000%
25	-9.162	-21.327	-16.784	9.162	21.327	16.784	0.000%
26	0.000	-48.431	0.000	0.000	48.431	0.000	0.000%
27	0.000	-48.431	-4.439	0.000	48.431	4.439	0.000%
28	2.182	-48.431	-3.866	-2.182	48.431	3.866	0.000%
29	3.817	-48.431	-2.277	-3.817	48.431	2.277	0.000%
30	4.441	-48.431	-0.031	-4.441	48.431	0.031	0.000%
31	3.797	-48.431	2.343	-3.797	48.431	-2.343	0.000%
32	2.199	-48.431	3.938	-2.199	48.431	-3.938	0.000%
33	0.000	-48.431	4.509	0.000	48.431	-4.509	0.000%
34	-2.199	-48.431	3.938	2.199	48.431	-3.938	0.000%
35	-3.797	-48.431	2.343	3.797	48.431	-2.343	0.000%
36	-4.441	-48.431	-0.031	4.441	48.431	0.031	0.000%
37	-3.817	-48.431	-2.277	3.817	48.431	2.277	0.000%
38	-2.182	-48.431	-3.866	2.182	48.431	3.866	0.000%
39	0.000	-23.696	-4.778	0.000	23.696	4.778	0.000%
40	2.277	-23.696	-4.171	-2.277	23.696	4.171	0.000%
41	4.002	-23.696	-2.478	-4.002	23.696	2.478	0.000%
42	4.674	-23.696	-0.048	-4.674	23.696	0.048	0.000%
43	3.971	-23.696	2.580	-3.971	23.696	-2.580	0.000%
44	2.303	-23.696	4.282	-2.303	23.696	-4.282	0.000%
45	0.000	-23.696	4.885	0.000	23.696	-4.885	0.000%
46	-2.303	-23.696	4.282	2.303	23.696	-4.282	0.000%
47	-3.971	-23.696	2.580	3.971	23.696	-2.580	0.000%
48	-4.674	-23.696	-0.048	4.674	23.696	0.048	0.000%
49	-4.002	-23.696	-2.478	4.002	23.696	2.478	0.000%
50	-2.277	-23.696	-4.171	2.277	23.696	4.171	0.000%

Non-Linear Convergence Results

Load Combination	Converged?	Number of Cycles	Displacement Tolerance	Force Tolerance
1	Yes	4	0.00000001	0.00000001
2	Yes	4	0.00000001	0.00061637
3	Yes	4	0.00000001	0.00034348
4	Yes	5	0.00000001	0.00055617
5	Yes	5	0.00000001	0.00024629
6	Yes	5	0.00000001	0.00073267
7	Yes	5	0.00000001	0.00033074
8	Yes	5	0.00000001	0.00028181
9	Yes	5	0.00000001	0.00013239
10	Yes	5	0.00000001	0.00061784
11	Yes	5	0.00000001	0.00027401
12	Yes	5	0.00000001	0.00072358
13	Yes	5	0.00000001	0.00032382
14	Yes	4	0.00000001	0.00062799
15	Yes	4	0.00000001	0.00034625
16	Yes	5	0.00000001	0.00069249
17	Yes	5	0.00000001	0.00030869
18	Yes	5	0.00000001	0.00061899
19	Yes	5	0.00000001	0.00027416
20	Yes	5	0.00000001	0.00028195

21	Yes	5	0.00000001	0.00013243
22	Yes	5	0.00000001	0.00075009
23	Yes	5	0.00000001	0.00033923
24	Yes	5	0.00000001	0.00053688
25	Yes	5	0.00000001	0.00023704
26	Yes	4	0.00000001	0.00011200
27	Yes	5	0.00000001	0.00020038
28	Yes	5	0.00000001	0.00024541
29	Yes	5	0.00000001	0.00027040
30	Yes	5	0.00000001	0.00021485
31	Yes	5	0.00000001	0.00022964
32	Yes	5	0.00000001	0.00023645
33	Yes	5	0.00000001	0.00018245
34	Yes	5	0.00000001	0.00023250
35	Yes	5	0.00000001	0.00022887
36	Yes	5	0.00000001	0.00021591
37	Yes	5	0.00000001	0.00027606
38	Yes	5	0.00000001	0.00024684
39	Yes	4	0.00000001	0.00004327
40	Yes	4	0.00000001	0.00020324
41	Yes	4	0.00000001	0.00044476
42	Yes	4	0.00000001	0.00038495
43	Yes	4	0.00000001	0.00030970
44	Yes	4	0.00000001	0.00038855
45	Yes	4	0.00000001	0.00004374
46	Yes	4	0.00000001	0.00033716
47	Yes	4	0.00000001	0.00028995
48	Yes	4	0.00000001	0.00038585
49	Yes	4	0.00000001	0.00047692
50	Yes	4	0.00000001	0.00020810

Maximum Tower Deflections - Service Wind

Section No.	Elevation ft	Horz. Deflection in	Gov. Load Comb.	Tilt °	Twist °
L1	140 - 91.75	22.614	45	1.260	0.024
L2	95.5 - 45.5	11.429	45	1.076	0.011
L3	50 - 0	3.237	45	0.589	0.004

Critical Deflections and Radius of Curvature - Service Wind

Elevation ft	Appurtenance	Gov. Load Comb.	Deflection in	Tilt °	Twist °	Radius of Curvature ft
140.000	PD1151-5	45	22.614	1.260	0.024	65069
135.500	STARBEAM	45	21.431	1.247	0.023	65069
134.000	Sector Mount [SM 514-1]	45	21.038	1.243	0.022	54224
132.500	STARBEAM	45	20.645	1.238	0.022	43379
120.000	ET-X-TS-70-15-62-18-iR-RD w/ Mount Pipe	45	17.403	1.197	0.018	16267
100.000	ASP-705	45	12.472	1.106	0.012	8132
88.000	RR65-18-02DPL2 w/ Mount Pipe	45	9.763	1.015	0.009	6326

Maximum Tower Deflections - Design Wind

Section No.	Elevation ft	Horz. Deflection in	Gov. Load Comb.	Tilt °	Twist °
L1	140 - 91.75	92.586	14	5.148	0.097

Section No.	Elevation ft	Horz. Deflection in	Gov. Load Comb.	Tilt °	Twist °
L2	95.5 - 45.5	46.652	14	4.403	0.043
L3	50 - 0	13.191	14	2.404	0.015

Critical Deflections and Radius of Curvature - Design Wind

Elevation ft	Appurtenance	Gov. Load Comb.	Deflection in	Tilt °	Twist °	Radius of Curvature ft
140.000	PD1151-5	14	92.586	5.148	0.097	16521
135.500	STARBEAM	14	87.725	5.103	0.091	16521
134.000	Sector Mount [SM 514-1]	14	86.107	5.088	0.089	13767
132.500	STARBEAM	14	84.491	5.073	0.087	11013
120.000	ET-X-TS-70-15-62-18-iR-RD w/ Mount Pipe	14	71.167	4.923	0.071	4128
100.000	ASP-705	14	50.925	4.531	0.048	2060
88.000	RR65-18-02DPL2 w/ Mount Pipe	14	39.833	4.150	0.037	1581

Compression Checks

Pole Design Data

Section No.	Elevation ft	Size	L ft	L_u ft	Kl/r	A in^2	P_u K	ϕP_n K	Ratio $\frac{P_u}{\phi P_n}$
L1	140 - 91.75 (1)	TP29.239x22x0.25	48.250	0.000	0.0	22.556	-7.760	1509.920	0.005
L2	91.75 - 45.5 (2)	TP35.678x28.176x0.313	50.000	0.000	0.0	34.409	-16.991	2486.200	0.007
L3	45.5 - 0 (3)	TP41.88x34.378x0.375	50.000	0.000	0.0	49.401	-28.415	3572.550	0.008

Pole Bending Design Data

Section No.	Elevation ft	Size	M_{ux} kip-ft	ϕM_{nx} kip-ft	Ratio $\frac{M_{ux}}{\phi M_{nx}}$	M_{uy} kip-ft	ϕM_{ny} kip-ft	Ratio $\frac{M_{uy}}{\phi M_{ny}}$
L1	140 - 91.75 (1)	TP29.239x22x0.25	310.170	881.792	0.352	0.000	881.792	0.000
L2	91.75 - 45.5 (2)	TP35.678x28.176x0.313	993.617	1771.508	0.561	0.000	1771.508	0.000
L3	45.5 - 0 (3)	TP41.88x34.378x0.375	1915.267	3045.542	0.629	0.000	3045.542	0.000

Pole Shear Design Data

Section No.	Elevation ft	Size	Actual V_u K	ϕV_n K	Ratio $\frac{V_u}{\phi V_n}$	Actual T_u kip-ft	ϕT_n kip-ft	Ratio $\frac{T_u}{\phi T_n}$
L1	140 - 91.75 (1)	TP29.239x22x0.25	11.335	754.962	0.015	0.815	1765.742	0.000
L2	91.75 - 45.5 (2)	TP35.678x28.176x0.313	16.976	1234.170	0.014	0.812	3547.350	0.000

Section No.	Elevation ft	Size	Actual V_u K	ϕV_n K	Ratio $\frac{V_u}{\phi V_n}$	Actual T_u kip-ft	ϕT_n kip-ft	Ratio $\frac{T_u}{\phi T_n}$
L3	45.5 - 0 (3)	TP41.88x34.378x0.375	19.686	1775.180	0.011	0.810	6098.533	0.000

Pole Interaction Design Data

Section No.	Elevation ft	Ratio $\frac{P_u}{\phi P_n}$	Ratio $\frac{M_{ux}}{\phi M_{nx}}$	Ratio $\frac{M_{uy}}{\phi M_{ny}}$	Ratio $\frac{V_u}{\phi V_n}$	Ratio $\frac{T_u}{\phi T_n}$	Comb. Stress Ratio	Allow. Stress Ratio	Criteria
L1	140 - 91.75 (1)	0.005	0.352	0.000	0.015	0.000	0.357 ✔	1.000	4.8.2 ✔
L2	91.75 - 45.5 (2)	0.007	0.561	0.000	0.014	0.000	0.568 ✔	1.000	4.8.2 ✔
L3	45.5 - 0 (3)	0.008	0.629	0.000	0.011	0.000	0.637 ✔	1.000	4.8.2 ✔

Section Capacity Table

Section No.	Elevation ft	Component Type	Size	Critical Element	P K	ϕP_{allow} K	% Capacity	Pass Fail
L1	140 - 91.75	Pole	TP29.239x22x0.25	1	-7.760	1509.920	35.7	Pass
L2	91.75 - 45.5	Pole	TP35.678x28.176x0.313	2	-16.991	2486.200	56.8	Pass
L3	45.5 - 0	Pole	TP41.88x34.378x0.375	3	-28.415	3572.550	63.7	Pass
							Summary	
						Pole (L3)	63.7	Pass
						RATING =	**63.7**	**Pass**

APPENDIX B

BASE LEVEL DRAWING

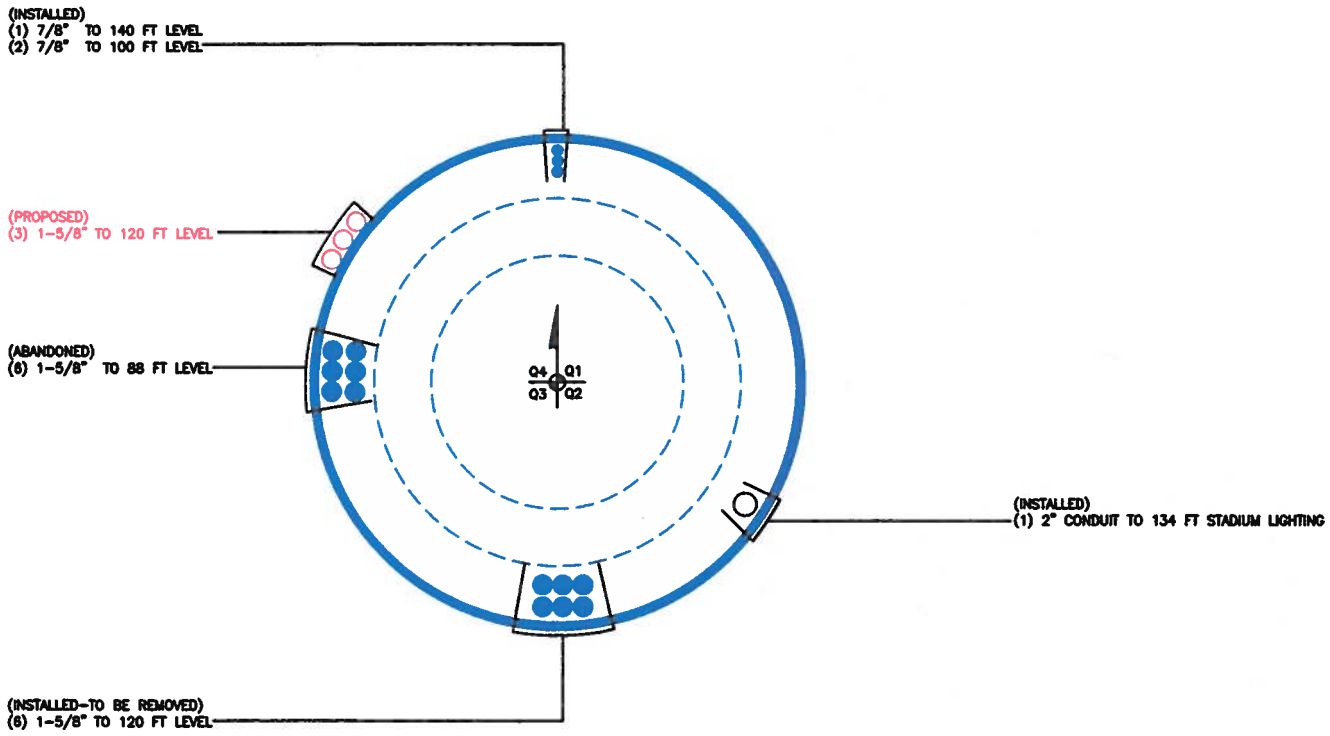

BUSINESS UNIT: 875358 TOWER ID: C_BASELEVEL

APPENDIX C

ADDITIONAL CALCULATIONS

Monopole Drilled Pier

Checks capacity of a single drilled shaft foundation for a monopole per TIA-222-G

BU#: 875358
Site Name: *COFFMAN HIGH SCHOOL*
App Number: *167727, Rev. 1*

ACI 318 Version:	2008

Factored Design Reactions		
Shear, S:	20.00	kips
Moment, Mt:	1915.00	ft-kips
Tower Weight, Wt:	28.00	kips
Tower Height, H:	140	ft
Base Diameter, BD:	41.88	in

Foundation Dimensions		
Caisson Diameter, CD:	6.0	ft
Ext. Above Grade, E:	1.0	ft
Depth Below Grade, L:	14.0	ft
Neglected Depth, N:	3.5	ft
Rebar Size, Sp:	10	
Rebar Quantity, mp:	32	
Tie Size, tp:	4	

Material Properties		
Rebar Tensile, Fy:	60	ksi
Concrete Strength, F'c:	4000	psi
Concrete Density, δx:	150	pcf
Clear Cover, cc:	3.0	in

Soil Properties		
Soil Unit Weight, γ:	136	pcf
Ultimate Gross Bearing, Bc:	50.000	ksf
Seismic Design Cat, z:	B	

Caisson Analysis		
Depth to Zero Shear:	5.8	ft
Max Moment:	2034.41	ft-kips
Overturning FOS:	9.67	

Design Checks	Capacity/ Availability	Demand/ Limits	Check
Bearing Pressure (ksf):	37.50	3.24	OK
Minimum Req'd Dia. (ft):	6.00	4.99	OK
Rebar Area (in^2):	40.64	13.57	OK
Pier moment capacity (k-ft):	5331.99	2034.41	OK
Rebar spacing (in):	4.99	2 < Bs <18	OK
Development Length (in):	94.86	48.19	OK
Soil moment capacity (FOS):	9.67	1.33	OK

☐ **Assume 0.33% Minimum Steel?**

Bearing: 8.6%

Pier: 38.2%

Soil: 13.8%

Depth		Shear		Moment	
3	ft	20	kips	1977.5	ft-kips
4.5	ft	20	kips	2007.5	ft-kips
6	ft	-2.3	kips	2020.6	ft-kips

Moment Capacity of Drilled Concrete Shaft (Caisson) for TIA Rev F or G

Note: Shaft assumed to have ties, not spiral, transverse reinforcing

Site Data

BU#: *875358*
Site Name: *COFFMAN HIGH SCHOOL*
App #: *167727, Rev. 1*

Loads Already Factored		
For M (WL)	1.3	<----Disregard
For P (DL)	1.3	<----Disregard

Pier Properties		
Concrete:		
Pier Diameter =	6.0	ft
Concrete Area =	4071.5	in^2
Reinforcement:		
Clear Cover to Tie=	3.00	in
Horiz. Tie Bar Size=	4	
Vert. Cage Diameter =	5.31	ft
Vert. Cage Diameter =	63.73	in
Vertical Bar Size =	10	
Bar Diameter =	1.27	in
Bar Area =	1.27	in^2
Number of Bars =	32	
As Total=	40.64	in^2
A s/ Aconc, Rho:	0.0100	1.00%

ACI 10.5 , ACI 21.10.4, and IBC 1810.

Min As for Flexural, Tension Controlled, Shafts:

(3)*(Sqrt(f'c)/Fy:	0.0032
200 / Fy:	0.0033

Minimum Rho Check:

Actual Req'd Min. Rho:	0.33%	Flexural
Provided Rho:	1.00%	OK

Ref. Shaft Max Axial Capacities, ϕ Max(Pn or Tn):		
Max Pu = (φ=0.65) Pn.		
Pn per ACI 318 (10-2)	8394.54	kips
at Mu=(ϕ=0.65)Mn=	4355.67	ft-kips
Max Tu, (φ=0.9) Tn =	2194.56	kips
at Mu=ϕ=(0.90)Mn=	0.00	ft-kips

Maximum Shaft Superimposed Forces		
TIA Revision:	G	
Max. Factored Shaft Mu:	2034.406	ft-kips (* Note)
Max. Factored Shaft Pu:	28	kips
Max Axial Force Type:	Comp.	

(*) Note: Max Shaft Superimposed Moment does not necessarily equal to the shaft top reaction moment

Load Factor	Shaft Factored Loads		
1.00	Mu:	2034.406	ft-kips
1.00	Pu:	28	kips

Material Properties		
Concrete Comp. strength, f'c =	4000	psi
Reinforcement yield strength, Fy =	60	ksi
Reinforcing Modulus of Elasticity, E =	29000	ksi
Reinforcement yield strain =	0.00207	
Limiting compressive strain =	0.003	
ACI 318 Code		
Select Analysis ACI Code=	2008	
Seismic Properties		
Seismic Design Category =	B	
Seismic Risk =	Low	

Solve (Run) <-- Press Upon Completing All Input

Results:

Governing Orientation Case: **1**

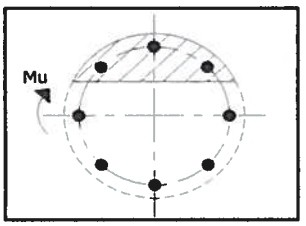

Case 1

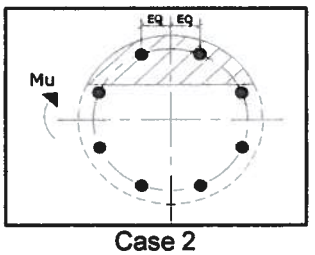

Case 2

Dist. From Edge to Neutral Axis:	**13.13**	in
Extreme Steel Strain, εt:	**0.0125**	
	εt > 0.0050, Tension Controlled	
Reduction Factor,φ:	**0.900**	

Output Note: Negative Pu=Tension

For Axial Compression, φ Pn = Pu:	28.00	kips
Drilled Shaft Moment Capacity, φMn:	**5331.99**	ft-kips
Drilled Shaft Superimposed Mu:	**2034.41**	ft-kips

(Mu/φMn, Drilled Shaft Flexure CSR:	**38.2%**

Square, Stiffened / Unstiffened Base Plate, Any Rod Material - Rev. F /G

Assumptions: 1) Rod groups at corners. Total # rods divisible by 4. Maximum total # of rods = 48 (12 per Corner).
2) Rod Spacing = Straight Center-to-Center distance between any (2) adjacent rods (same corner)
3) Clear space between bottom of leveling nut and top of concrete not exceeding (1)*(Rod Diameter)

Site Data

BU#: *875358*
Site Name: *COFFMAN HIGH SCHOOI*
App #: *167727, Rev. 1*

Anchor Rod Data		
Eta Factor, η	0.5	TIA G (Fig. 4-4)
Qty:	12	
Diam:	2.25	in
Rod Material:	A615-J	
Yield, Fy:	75	ksi
Strength, Fu:	100	ksi
Bolt Circle:	48	in
Anchor Spacing:	6	in

Plate Data		
W=Side:	47	in
Thick:	3	in
Grade:	50	ksi
Clip Distance:	16	in

Stiffener Data (Welding at both sides)		
Configuration:	Unstiffened	
Weld Type:		**
Groove Depth:		in **
Groove Angle:		degrees
Fillet H. Weld:		<-- Disregard
Fillet V. Weld:		in
Width:		in
Height:		in
Thick:		in
Notch:		in
Grade:		ksi
Weld str.:		ksi

Pole Data		
Diam:	41.88	in
Thick:	0.375	in
Grade:	65	ksi
# of Sides:	18	"0" IF Round

Base Reactions		
TIA Revision:	G	
Factored Moment, Mu:	1915	ft-kips
Factored Axial, Pu:	28	kips
Factored Shear, Vu:	20	kips

Anchor Rod Results

TIA G --> Max Rod (Cu+ Vu/η):	165.3 Kips
Axial Design Strength, Φ*Fu*Anet:	260.0 Kips
Anchor Rod Stress Ratio:	63.6% Pass

Base Plate Results Flexural Check

Base Plate Stress:	22.1 ksi
PL Design Bending Strength, Φ*Fy:	45.0 ksi
Base Plate Stress Ratio:	49.0% Pass

PL Ref. Data
Yield Line (in): 24.59
Max PL Length: 24.59

N/A - Unstiffened

Stiffener Results

Horizontal Weld :	N/A
Vertical Weld:	N/A
Plate Flex+Shear, fb/Fb+(fv/Fv)^2:	N/A
Plate Tension+Shear, ft/Ft+(fv/Fv)^2:	N/A
Plate Comp. (AISC Bracket):	N/A

Pole Results

Pole Punching Shear Check:	N/A

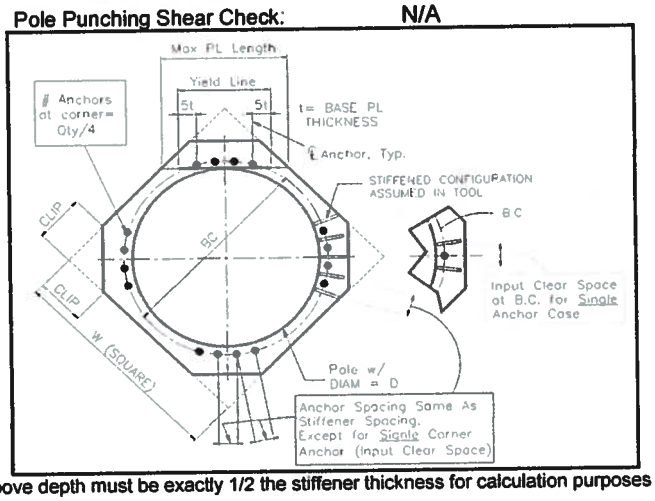

** Note: for complete joint penetration groove welds the groove depth must be exactly 1/2 the stiffener thickness for calculation purposes

CAISSON Version 10.40 4:20:09 PM Friday, November 09, 2012
Crown Castle USA

```
*****************************************************************************************
*                                                                                       *
* CAISSON - Pier Foundations Analysis and Design -  Copyright Power Line Systems, Inc. 1993-2010 *
*                                                                                       *
*****************************************************************************************
```

Project Title: BU #875358
Project Notes:

Calculation Method: Full 8CD

******* I N P U T D A T A

Pier Properties

Diameter (ft)	Distance of Top of Pier above Ground (ft)	Concrete Strength (ksi)	Steel Yield Strength (ksi)
6.00	1.00	4.00	60.00

Soil Properties

Layer	Type	Thickness (ft)	Depth at Top of Layer (ft)	Density (lbs/ft^3)	CU (psf)	KP	PHI (deg)
1	Clay	3.50	0.00	130.0			
2	Clay	1.50	3.50	130.0	3000.0		
3	Clay	10.00	5.00	145.0	20000.0		
4	Clay	5.00	15.00	150.0	30000.0		

Design (Factored) Loads at Top of Pier

Moment (ft-k)	Axial Load (kips)	Shear Load (kips)	Additional Safety Factor Against Soil Failure
1915.0	28.0	20.00	9.67

******* R E S U L T S

Calculated Pier Properties

Length (ft)	Weight (kips)	End Bearing Pressure (psf)
15.000	63.617	990.3

Ultimate Resisting Forces Along Pier

Type	Distance of Top of Layer to Top of Pier (ft)	Thickness (ft)	Density (lbs/ft^3)	CU (psf)	KP	Force (kips)	Arm (ft)
Clay	1.00	3.50	130.0			0.00	2.75
Clay	4.50	1.50	130.0	3000.0		216.00	5.25
Clay	6.00	4.49	145.0	20000.0		4308.74	8.24
Clay	10.49	4.51	145.0	20000.0		-4331.24	12.74

Shear and Moments Along Pier

Distance below Top of Pier (ft)	Shear (with Safety Factor) (kips)	Moment (with Safety Factor) (ft-k)	Shear (without Safety Factor) (kips)	Moment (without Safety Factor) (ft-k)
0.00	193.5	18542.1	20.0	1917.5
1.50	193.5	18832.3	20.0	1947.5
3.00	193.5	19122.6	20.0	1977.5
4.50	193.5	19412.8	20.0	2007.5
6.00	-22.5	19541.1	-2.3	2020.8
7.50	-1462.5	18427.3	-151.2	1905.6
9.00	-2902.5	15153.6	-300.2	1567.1
10.50	-4320.0	9720.0	-446.7	1005.2
12.00	-2880.0	4320.0	-297.8	446.7
13.50	-1440.0	1080.0	-148.9	111.7
15.00	0.0	-0.0	0.0	-0.0