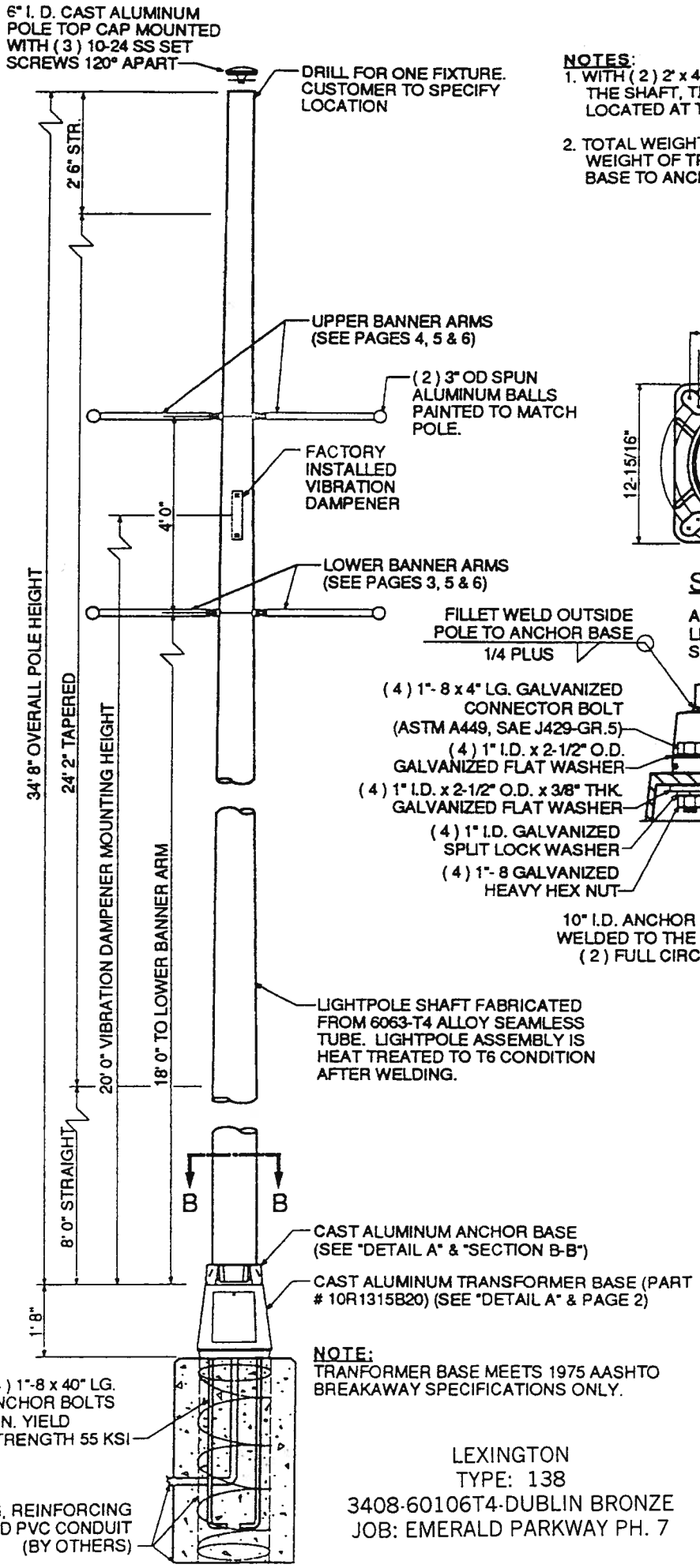

NOTES:

1. WITH (2) 2' x 4' BANNERS ATTACHED TO THE SHAFT, THE MAXIMUM EPA FOR A FIXTURE LOCATED AT THE POLE TOP IS 5.00 SQ. FT.
2. TOTAL WEIGHT (INCLUDING BANNER ARMS): 234 LBS. WEIGHT OF TRANSFORMER BASE AND TRANSFORMER BASE TO ANCHOR BASE CONNECTING HARDWARE: 41 LBS.

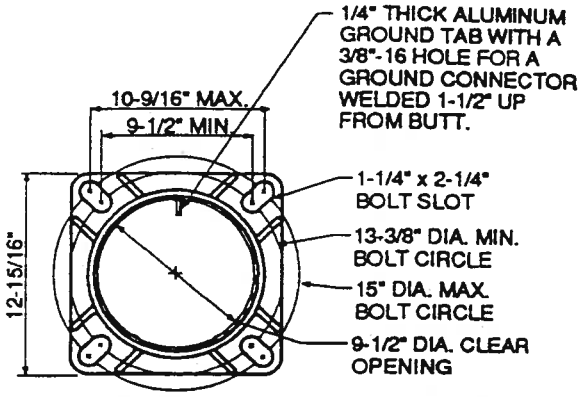

SECTION B-B

NOTE: NUT COVERS NOT SHOWN

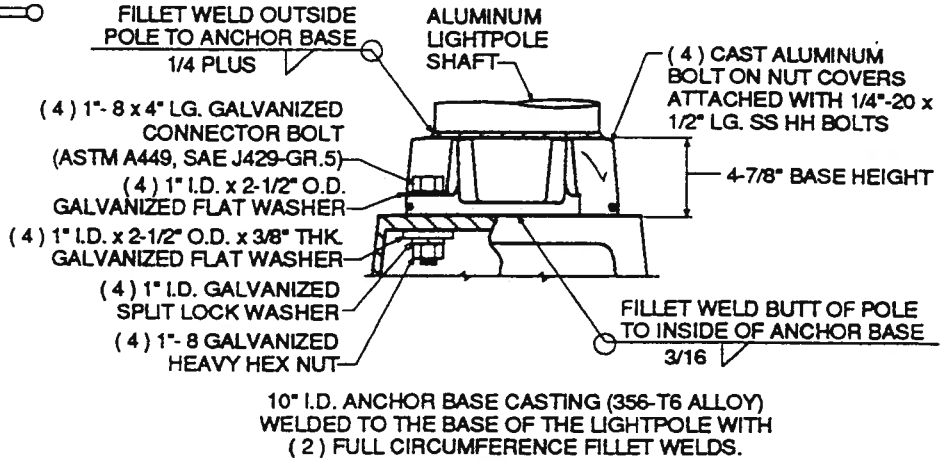

10" I.D. ANCHOR BASE CASTING (356-T6 ALLOY) WELDED TO THE BASE OF THE LIGHTPOLE WITH (2) FULL CIRCUMFERENCE FILLET WELDS.

DETAIL A

NOTE:
TRANFORMER BASE MEETS 1975 AASHTO BREAKAWAY SPECIFICATIONS ONLY.

LEXINGTON
TYPE: 138
3408-60106T4-DUBLIN BRONZE
JOB: EMERALD PARKWAY PH. 7

Lexington
Standard Corporation
1243 EAGAN INDUSTRIAL ROAD EAGAN MINNESOTA 55121
PHONE (612) 452-5650; (800) 899-7577; FAX (612) 452-1207

(1) TRANSFORMER BASE LIGHTPOLES

LEXINGTON MODEL NUMBERS:	340860106T4
OVERALL HEIGHT:	34' 8"
HEIGHT TOLERANCE ± 2"	
SHIP IN (1) SECTION	
TOP DIAMETER:	6"
BOTTOM DIAMETER:	10"
WALL THICKNESS:	0.188"
FINISH: PAINTED DUBLIN BRONZE OVER 100 GRIT SATIN POLISH	

CUST:	
PROJ:	CITY OF DUBLIN
LOC:	
REP:	LIGHTING SYSTEMS OF COLUMBUS

DATE:	DRAWN BY:	CHK'D BY:	JOB NO.
03-18-96			PROPOSAL
REVISED:	REV BY:	APPROVED BY:	PAGE (1) OF

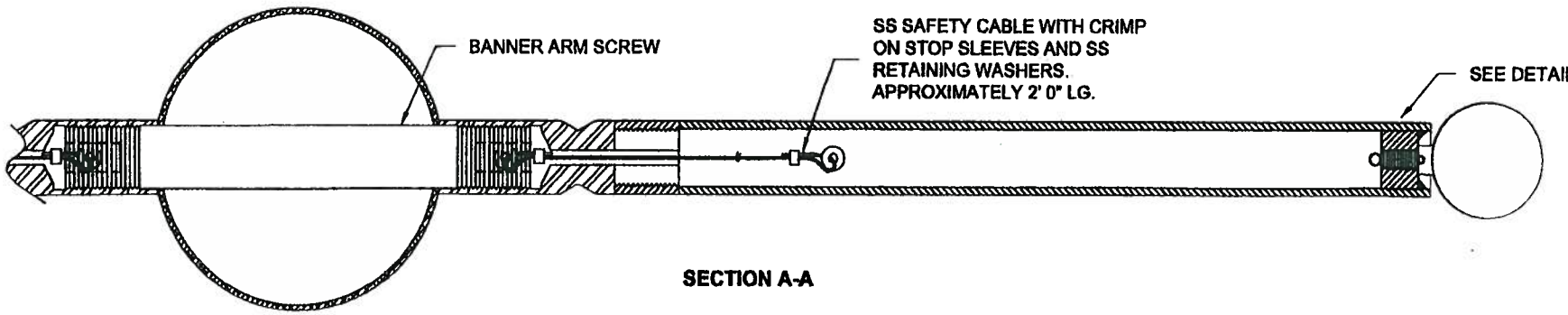

SECTION A-A

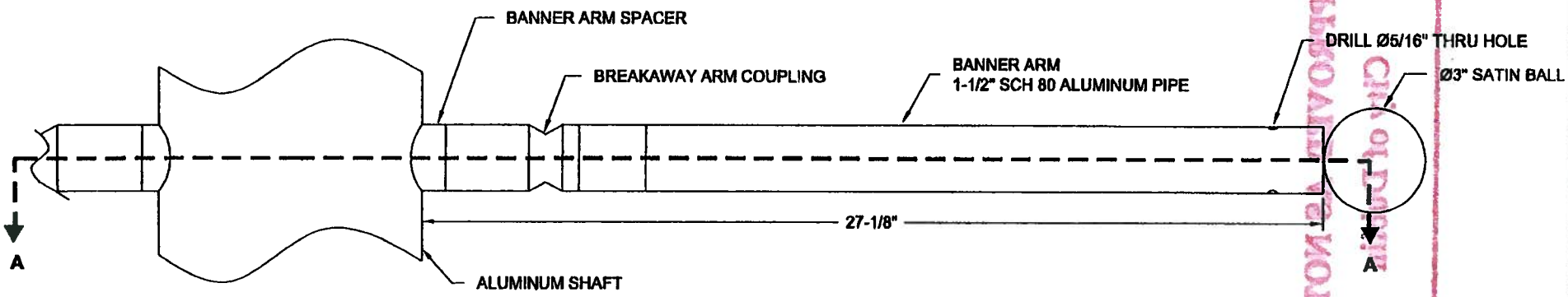

FRONT VIEW

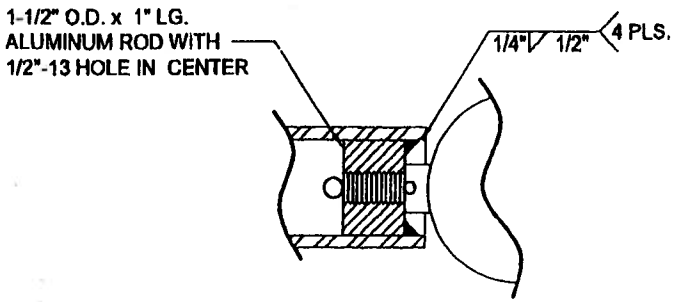

DETAIL B

NOTE: IF THIS DRAWING IS APPROVED WITH CHANGES, VALMONT LEXINGTON MUST RECEIVE THE DRAWING WITH CHANGES NOTED IN RED.

TOTAL P.05

valmont
LEXINGTON
Poles Division, Valmont Industries, Inc.
P.O. Box 228 Farmington, Minnesota 55024-0228
Phone: (651) 463-8990 (800) 899-7577
Fax: (651) 463-3349

DESCRIPTION: DOUBLE BANNER ARM ASSEMBLY			
PART NO:	MATERIAL: ALUMINUM ALLOY		
DATE: 04-11-00	DRAWN BY: MAT	CHK'D BY:	DWG NO: LS91423
REVISED:	PROD APP:	APPROVED BY:	PAGE:

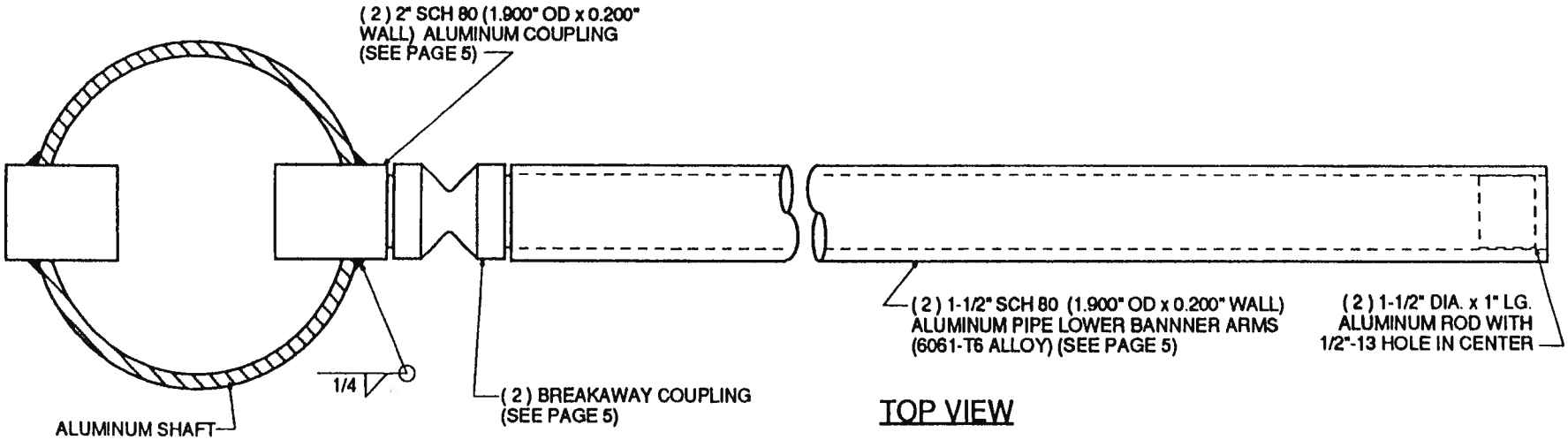

TOP VIEW

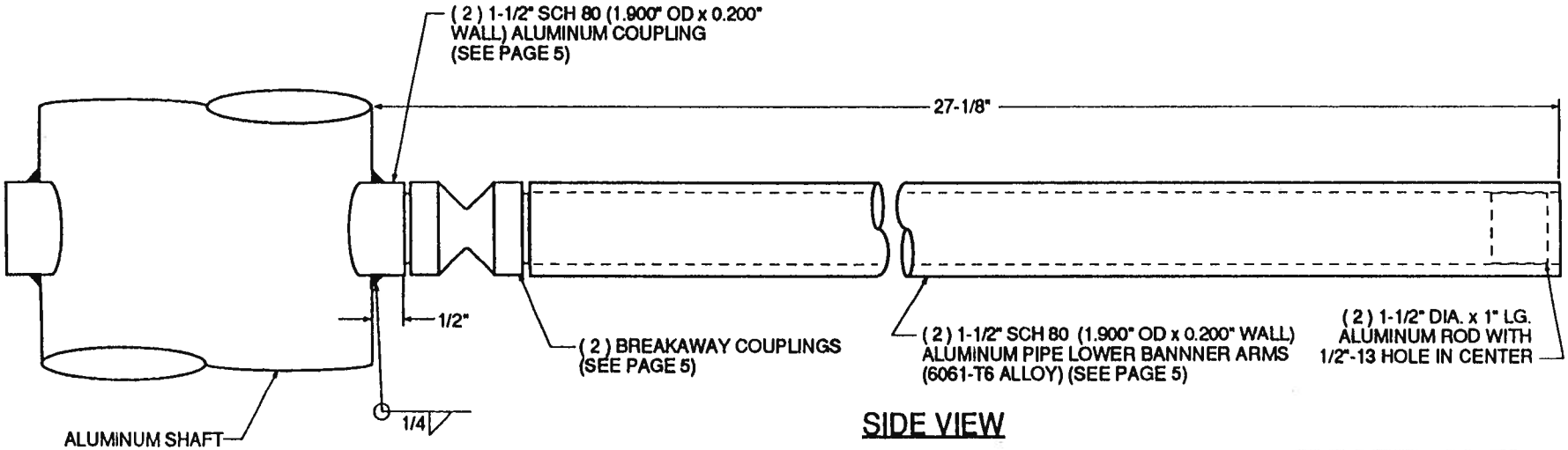

SIDE VIEW

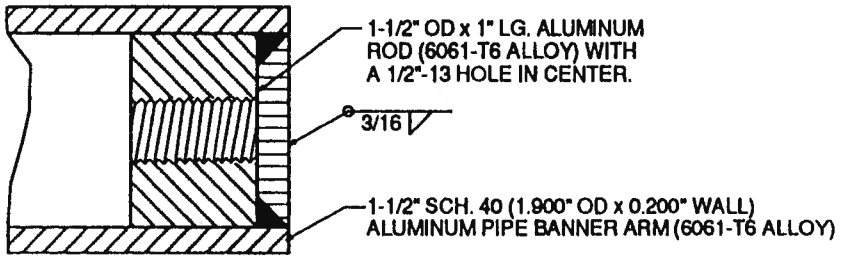

THREADED END DETAIL

Lexington
Standard Corporation
1243 EAGAN INDUSTRIAL ROAD EAGAN, MINNESOTA 55121
PHONE (612) 452-5650; (800) 899-7577; FAX (612) 452-1207

DESC.: UPPER BANNER ARMS & ATTACHMENT			
MODEL NO.:		MATERIAL: ALUMINUM ALLOY	
DATE: 03-18-96	DRAWN BY:	CHK'D BY:	JOB NO. PROPOSAL
REVISED:	REV. BY:	APPROVED BY:	PAGE (4) OF

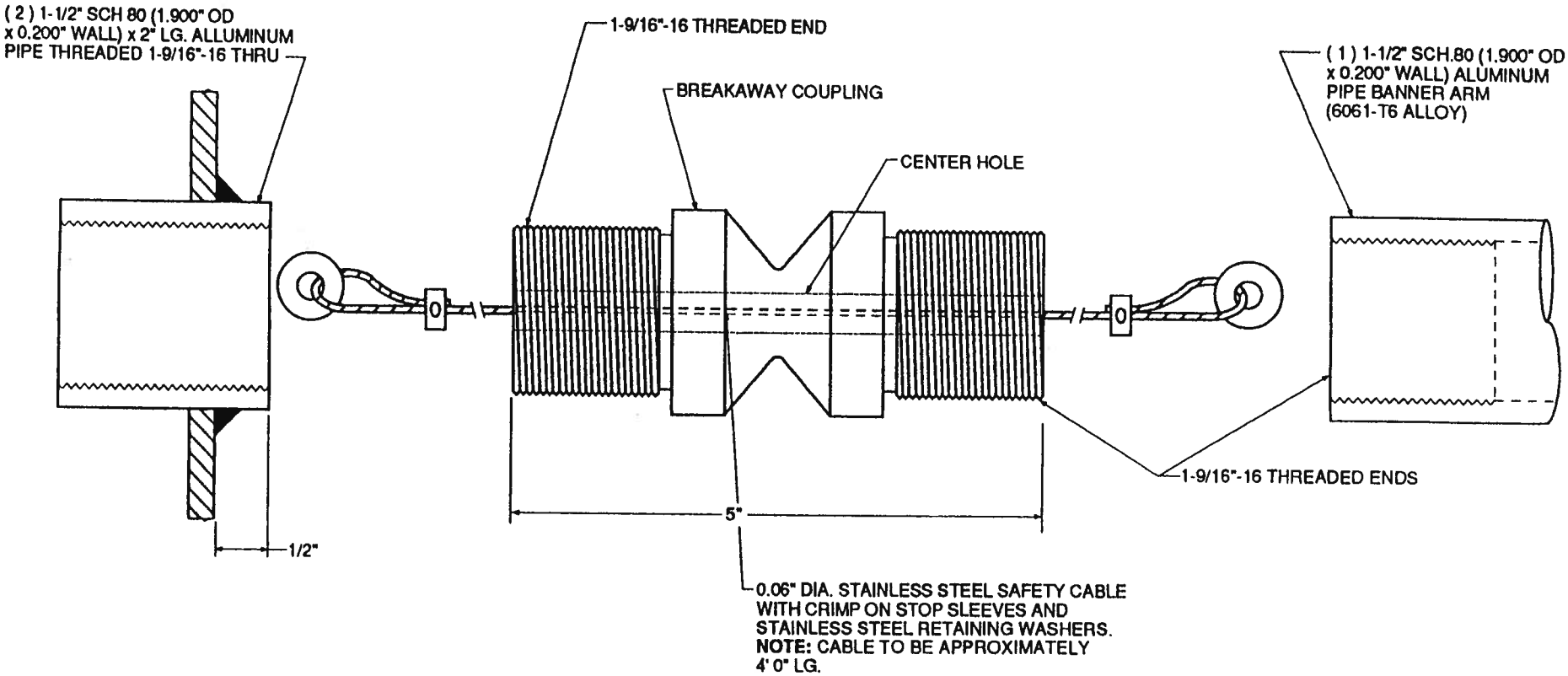

BREAKAWAY COUPLING DETAIL

Lexington
Standard Corporation
1243 EAGAN INDUSTRIAL ROAD EAGAN, MINNESOTA
PHONE (612) 452-5650; (800) 899-7577; FAX (612) 452-1207

DESC.: BANNER ARM ATTACHMENT DET			
MODEL NO.:		MATERIAL: ALUMINUM ALLOY	
DATE: 03-18-96	DRAWN BY:	CHK'D BY:	JOB NO. PROPO
REVISED: 03-19-96	REV. BY:	APPROVED BY:	PAGE (5) OF (6) PAGES

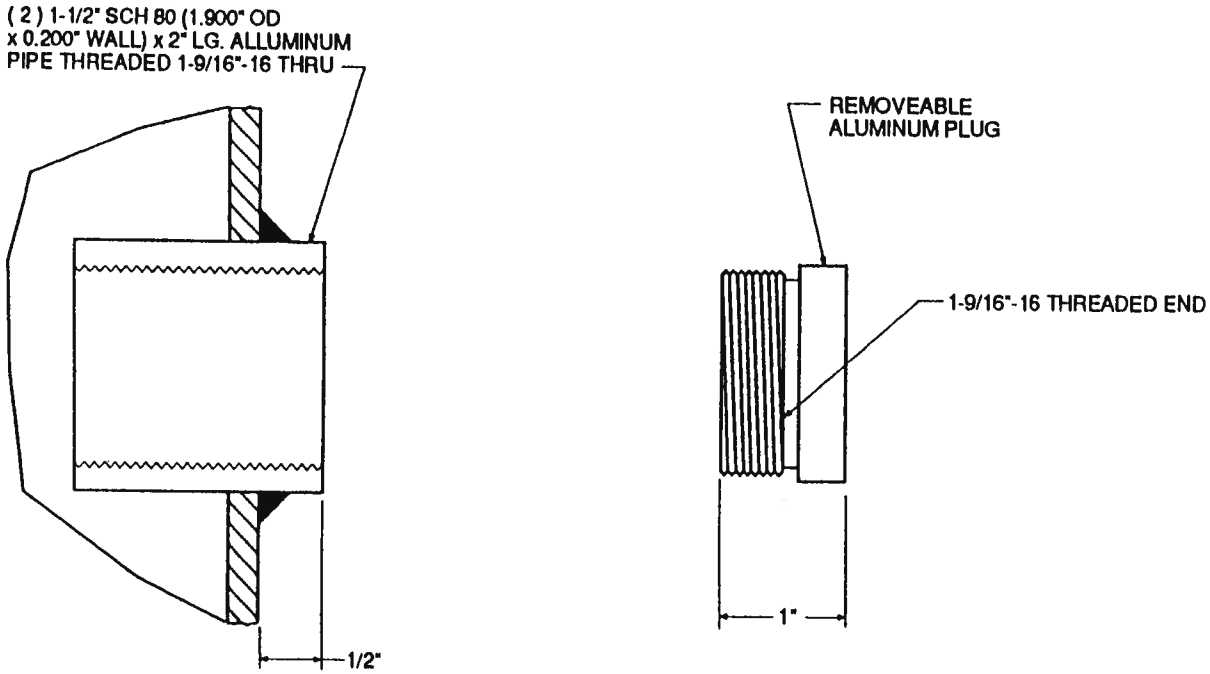

ALUMINUM PLUG DETAIL

NOTE:
PLUG TO BE USED WHEN
BANNER ARMS ARE REMOVED.

Lexington
Standard Corporation
1243 EAGAN INDUSTRIAL ROAD EAGAN, MINNESOTA
PHONE (612) 452-5650; (800) 899-7577; FAX (612) 452-1207

DESC.: BANNER ARM COUPLING PLUG DI			
MODEL NO.:		MATERIAL: ALUMINUM ALLOY	
DATE: 03-18-96	DRAWN BY:	CHK'D BY:	JOB NO. PROPC