7673 Avery Road

Application Checklist

1. Application Fee – attached
2. CD's - attached
3. Original Signed/Notarized Application Form-attached
4. Legal Description – As Built Survey
5. List of Property Owners – Not supplied as this is an existing facility with no substantial changes being made.
6. Application Statement – Installing three new antennas with no ground work.
7. Notarized Statement for Co-location – Existing Facility agreement in place.
8. 24 – Hour Emergency contact- Existing Facility agreement in place.
9. An inventory of the existing structures- Not supplied as this is an existing facility with no substantial changes being made and is just maintenance of equipment.
10. Site Plan – Attached as built. We are using the same ground layout and RAD center that already exists for Sprint.
11. Landscape Plan – Same as #10
12. Elevations- Tower Drawing as existing
13. Materials – included in CX drawings for Sprint 2.5
14. Proposed Signs – N/A no signage being added

APPROVED
By W. Troy Webb at 5:46 pm, Feb 04, 2014

Sprint®

PROJECT:	2.5 EQUIPMENT DEPLOYMENT
SITE NAME:	DUBLIN FIRE STATION
SITE CASCADE:	CB03XC053
SITE NUMBER:	875287
SITE ADDRESS:	7673 AVERY RD DUBLIN, OH 43017
SITE TYPE:	80.0' MONOPOLE

SITE INFORMATION

PROPERTY OWNER:
CROWN CASTLE
2000 CORPORATE DRIVE
CANONSBURG, PA 15317

SITE ADDRESS:
7673 AVERY RD
DUBLIN, OH 43017

GEOGRAPHIC COORDINATES:
LATITUDE: 40° 07' 40.77" N
LONGITUDE: -83° 09' 43.4" W

ZONING JURISDICTION:
CITY OF DUBLIN
614-410-4670

CROWN DISTRICT:
LOUISVILLE

POWER COMPANY:
OHIO EDISON
888-544-4877

AAV PROVIDER:
AMERITECH
800-898-0123

AREA MAP

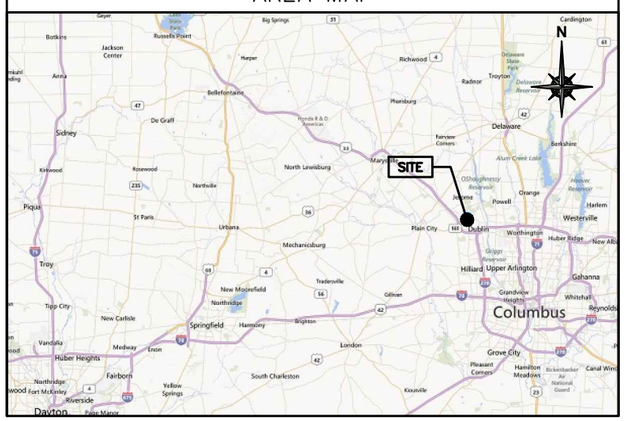

LOCATION MAP

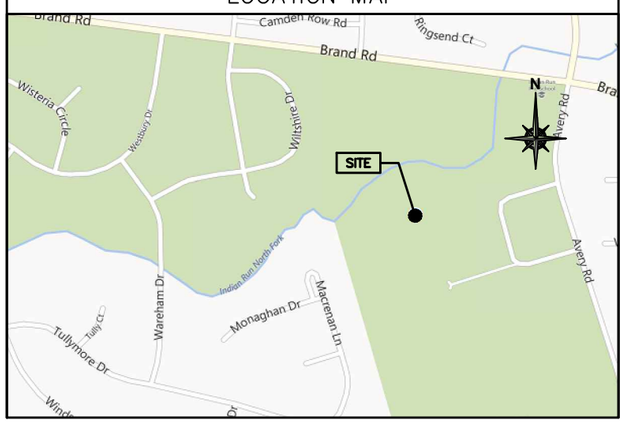

PROJECT DESCRIPTION

* INSTALL BBU KIT ..... (1) UADU
* INSTALL GROWTH CABINET ..... NONE
* INSTALL BBU BATTERIES ..... (4) SAMSUNG
* INSTALL RECTIFIERS ..... NONE
* INSTALL HYBRID CABLE ..... NONE
* INSTALL COAX JUMPERS ..... (27)
* INSTALL POWER JUNCTION CYLINDER ..... (3)
* INSTALL FIBER JUNCTION CYLINDER ..... (3)
* INSTALL 2.5 RRH ..... (3) RRH-V3
* INSTALL 2.5 PANEL ANTENNAS ..... (3) KMW ET-X-WM-18-65-8P

APPLICABLE CODES

* ALL WORK SHALL BE PERFORMED AND MATERIALS INSTALLED IN ACCORDANCE WITH THE FOLLOWING CODES AS ADOPTED BY THE LOCAL GOVERNING AUTHORITIES. NOTHING IN THESE PLANS IS TO BE CONSTRUED TO PERMIT WORK NOT CONFORMING TO THESE CODES.

1. INTERNATIONAL BUILDING CODE
2. ANSI/TIA-222 STRUCTURAL STANDARD FOR ANTENNA STRUCTURES
3. NFPA 780 – LIGHTNING PROTECTION CODE
4. NATIONAL ELECTRIC CODE

811
Know what's **below.**
Call before you dig.
www.call811.com

SHEET INDEX

SHT NO:	SHEET TITLE:	REV:	ENGINEER:
T-1	TITLE SHEET	1	RMW
SP-1	SPRINT SPECIFICATIONS	1	RMW
SP-2	SPRINT SPECIFICATIONS	1	RMW
A-1	SITE PLAN	1	RMW
A-2	TOWER ELEVATIONS & ANTENNA DETAILS	1	RMW
A-3	ANTENNA & HYBRID CABLE DETAILS	1	RMW
A-4	BREAKOUT & EQUIPMENT DETAILS	1	RMW
E-1	GROUNDING DETAILS	1	RMW
E-2	DC POWER DETAILS & PANEL SCHEDULES	1	RMW

PLANS PREPARED FOR:
Sprint
6580 Sprint Parkway
Overland Park,
Kansas 66251

PLANS PREPARED BY:
BENCHMARK SERVICES, INC.
PO Box 5 318 North Main Street
Huntingburg, Indiana 47542
Phone: (812) 683-3049

MLA PARTNER:
CROWN CASTLE INTERNATIONAL

ENGINEERING LICENSE:
STATE OF OHIO
RALPH M. WALLEM
E-67208
REGISTERED PROFESSIONAL ENGINEER

DRAWING NOTICE:
THESE DOCUMENTS ARE CONFIDENTIAL AND ARE THE SOLE PROPERTY OF SPRINT AND MAY NOT BE REPRODUCED, DISSEMINATED OR REDISTRIBUTED WITHOUT THE EXPRESS WRITTEN CONSENT OF SPRINT.

REVISIONS:

DESCRIPTION	DATE	BY	REV
RELEASE FOR REVIEW	01/17/14	MCB	A
100% CD'S	02/03/14	DSB	1

SITE NAME:
DUBLIN FIRE STATION

SITE CASCADE:
CB03XC053

SITE ADDRESS:
7673 AVERY RD
DUBLIN,OH 43017

SHEET DESCRIPTION:
TITLE SHEET

SHEET NUMBER:
T-1

Bordered: Template 010214-2: Sprint_2.5_Construction_Plans_CB03XC053_REV1-020314.dwg : Feb 03, 2014, 11:23:45 am

SECTION 01 100 – SCOPE OF WORK

THE WORK:
SHALL COMPLY WITH ALL APPLICABLE ADOPTED CODES AND STANDARDS, AND PORTIONS THEREOF.

PRECEDENCE:
SHOULD CONFLICTS OCCUR BETWEEN THE STANDARD CONSTRUCTION SPECIFICATIONS FOR WIRELESS SITES INCLUDING THE STANDARD CONSTRUCTION DETAILS FOR WIRELESS SITES AND THE CONSTRUCTION DRAWINGS, INFORMATION ON THE CONSTRUCTION DRAWINGS SHALL TAKE PRECEDENCE.

SITE FAMILIARITY:
CONTRACTOR SHALL BE RESPONSIBLE FOR FAMILIARIZING THEMSELVES WITH ALL CONTRACT DOCUMENTS, FIELD CONDITIONS AND DIMENSIONS PRIOR TO PROCEEDING WITH CONSTRUCTION.

ON-SITE SUPERVISION:
THE CONTRACTOR SHALL SUPERVISE AND DIRECT THE WORK AND SHALL BE RESPONSIBLE FOR CONSTRUCTION MEANS, METHODS, TECHNIQUES, SEQUENCES, AND PROCEDURES IN ACCORDANCE WITH THE CONTRACT DOCUMENTS.

DRAWINGS, SPECIFICATIONS AND DETAILS REQUIRED AT JOBSITE:
THE CONSTRUCTION CONTRACTOR SHALL MAINTAIN A FULL SET OF THE CONSTRUCTION DRAWINGS AT THE JOBSITE FROM MOBILIZATION THROUGH CONSTRUCTION COMPLETION.

A. DETAILS ARE INTENDED TO SHOW DESIGN INTENT. PROVIDE ALL MATERIALS AND LABOR AS REQUIRED TO PROVIDE A COMPLETE AND FUNCTIONING SYSTEM. MODIFICATIONS MAY BE REQUIRED TO SUIT JOB DIMENSIONS OR CONDITIONS, AND SUCH MODIFICATIONS SHALL BE INCLUDED AS PART OF THE WORK.

B. CONTRACTOR SHALL NOTIFY SPRINT CONSTRUCTION MANAGER OF ANY VARIATIONS PRIOR TO PROCEEDING WITH THE WORK. DIMENSIONS SHOWN ARE TO FINISH SURFACES UNLESS NOTED OTHERWISE. MODIFICATIONS MAY BE REQUIRED TO SUIT JOB DIMENSIONS OR CONDITIONS, AND SUCH MODIFICATIONS SHALL BE INCLUDED AS PART OF THE WORK.

C. MARK THE FIELD SET OF DRAWINGS IN RED, DOCUMENTING ANY CHANGES FROM THE CONSTRUCTION DOCUMENTS.

METHODS OF PROCEDURE (MOPS) FOR CONSTRUCTION:
CONTRACTOR SHALL PERFORM WORK AS DESCRIBED IN:

A. COAX COLOR CODING SWEEPS AND FIBER TESTING TS-0200 AND EL-0568

B. CABLE LABELING EN-2012-00

C. APPLICABLE INSTALLATION MOPS IDENTIFIED ELSEWHERE IN THE CONTRACT DOCUMENTS

SECTION 01 200 – COMPANY FURNISHED MATERIAL AND EQUIPMENT

A. COMPANY FURNISHED MATERIAL AND EQUIPMENT IS IDENTIFIED ON THE RF DATA SHEET IN THE CONSTRUCTION DRAWINGS.

B. CONTRACTOR IS RESPONSIBLE FOR SPRINT PROVIDED MATERIAL AND EQUIPMENT TO ENSURE IT IS PROTECTED AND HANDLED PROPERLY THROUGHOUT THE CONSTRUCTION DURATION.

C. CONTRACTOR IS RESPONSIBLE FOR RECEIPT OF SPRINT FURNISHED EQUIPMENT AT CELL SITE OR CONTRACTORS LOCATION. CONTRACTOR TO COMPLETE SHIPPING AND RECEIPT DOCUMENTATION IN ACCORDANCE WITH COMPANY PRACTICE.

SECTION 01 300 – CELL SITE CONSTRUCTION

NOTICE TO PROCEED:
NO WORK SHALL COMMENCE PRIOR TO COMPANY'S WRITTEN NOTICE TO PROCEED AND THE ISSUANCE OF WORK ORDER.

SITE CLEANLINESS:
CONTRACTOR SHALL KEEP THE SITE FREE FROM ACCUMULATING WASTE MATERIAL, DEBRIS, AND TRASH. AT THE COMPLETION OF THE WORK, CONTRACTOR SHALL REMOVE FROM THE SITE ALL REMAINING RUBBISH, IMPLEMENTS, TEMPORARY FACILITIES, AND SURPLUS MATERIALS.

SECTION 01 400 – SUBMITTALS & TESTS

ALTERNATES:
AT THE COMPANY'S REQUEST, ANY ALTERNATIVES TO THE MATERIALS OR METHODS SPECIFIED SHALL BE SUBMITTED TO SPRINT'S CONSTRUCTION MANAGER FOR APPROVAL. SPRINT WILL REVIEW AND APPROVE ONLY THOSE REQUESTS MADE IN WRITING. NO VERBAL APPROVALS WILL BE CONSIDERED.

TESTS AND INSPECTIONS:

A. THE CONTRACTOR SHALL BE RESPONSIBLE FOR ALL CONSTRUCTION TESTS, INSPECTIONS AND PROJECT DOCUMENTATION.

B. CONTRACTOR SHALL ACCOMPLISH TESTING INCLUDING BUT NOT LIMITED TO THE FOLLOWING:

1. COAX SWEEPS AND FIBER TESTS PER TS-0200 REV 4 ANTENNA LINE ACCEPTANCE STANDARDS.

2. AGL, AZIMUTH AND DOWNTILT: PROVIDE AN AUTOMATED REPORT UPLOADED TO SITERRA USING A COMMERCIAL MADE-FOR THE PURPOSE ELECTRONIC ANTENNA ALIGNMENT TOOL (AAT). INSTALLED AZIMUTH, CENTERLINE AND DOWNTILT MUST CONFORM WITH RF CONFIGURATION DATA.

3. CONTRACTOR SHALL BE RESPONSIBLE FOR ANY AND ALL CORRECTIONS TO ANY WORK IDENTIFIED AS UNACCEPTABLE IN SITE INSPECTION ACTIVITIES AND/OR AS A RESULT OF TESTING.

4. ALL TESTING REQUIRED BY APPLICABLE INSTALLATION MOPS.

C. REQUIRED CLOSEOUT DOCUMENTATION INCLUDES, BUT IS NOT LIMITED TO THE FOLLOWING;

1. AZIMUTH, DOWNTILT, AGL FROM SUNSIGHT INSTRUMENTS – ANTENNALIGN ALIGNMENT TOOL (AAT).

2. SWEEP AND FIBER TESTS.

3. SCALABLE BARCODE PHOTOGRAPHS OF TOWER TOP AND INACCESSIBLE SERIALIZED EQUIPMENT.

4. ALL AVAILABLE JURISDICTIONAL PERMIT AND OCCUPANCY INFORMATION.

5. PDF SCAN OF REDLINES PRODUCED IN FIELD.

6. A PDF SCAN OF REDLINE MARK-UPS SUITABLE FOR USE IN ELECTRONIC AS-BUILT DRAWING PRODUCTION.

7. LIEN WAIVERS.

8. FINAL PAYMENT APPLICATION.

9. REQUIRED FINAL CONSTRUCTION PHOTOS.

10. CONSTRUCTION AND COMMISSIONING CHECKLIST COMPLETE WITH NO DEFICIENT ITEMS.

11. APPLICABLE POST NTP TASKS INCLUDING DOCUMENT UPLOADS COMPLETED IN SITERRA (SPRINT'S DOCUMENT REPOSITORY OF RECORD).

12. CLOSEOUT PHOTOGRAPHS AND CLOSEOUT CHECKLIST: SPRINT WILL PROVIDE SEPARATE GUIDANCE.

SECTION 11 700 – ANTENNA ASSEMBLY, REMOTE RADIO UNITS AND CABLE INSTALLATION

SUMMARY:
THIS SECTION SPECIFIES INSTALLATION OF ANTENNAS, RRU'S, AND CABLE EQUIPMENT, INSTALLATION, AND TESTING OF COAXIAL FIBER CABLE.

ANTENNAS AND RRU'S:
THE NUMBER AND TYPE OF ANTENNAS AND RRU'S TO BE INSTALLED IS DETAILED ON THE CONSTRUCTION DRAWINGS.

HYBRID CABLE:
HYBRID CABLE WILL BE DC/FIBER AND FURNISHED FOR INSTALLATION AT EACH SITE. CABLE SHALL BE INSTALLED PER THE CONSTRUCTION DRAWINGS AND THE APPLICABLE MANUFACTURER'S REQUIREMENTS.

JUMPERS AND CONNECTORS:
FURNISH AND INSTALL 1/2" COAX JUMPER CABLES BETWEEN THE RRU'S AND ANTENNAS. JUMPERS SHALL BE TYPE LDF 4, FLC 12-50, CR 540, OR FXL 540. SUPER-FLEX CABLES ARE NOT ACCEPTABLE. JUMPERS BETWEEN THE RRU'S AND ANTENNAS OR TOWER TOP AMPLIFIERS SHALL CONSIST OF 1/2 INCH FOAM DIELECTRIC, OUTDOOR RATED COAXIAL CABLE, MIN. LENGTH FOR JUMPER SHALL BE 10"-0".

REMOTE ELECTRICAL TILT (RET) CABLES:

MISCELLANEOUS:
INSTALL SPLITTERS, COMBINERS, FILTERS PER RF DATA SHEET, FURNISHED BY SPRINT.

ANTENNA INSTALLATION:
THE CONTRACTOR SHALL ASSEMBLE ALL ANTENNAS ONSITE IN ACCORDANCE WITH THE INSTRUCTIONS SUPPLIED BY THE MANUFACTURER. ANTENNA HEIGHT, AZIMUTH, AND FEED ORIENTATION INFORMATION SHALL BE A DESIGNATED ON THE CONSTRUCTION DRAWINGS.

A. THE CONTRACTOR SHALL POSITION THE ANTENNA ON TOWER PIPE MOUNTS SO THAT THE BOTTOM STRUT IS LEVEL. THE PIPE MOUNTS SHALL BE PLUMB TO WITHIN 1 DEGREE.

B. ANTENNA MOUNTING REQUIREMENTS: PROVIDE ANTENNA MOUNTING HARDWARE AS INDICATED ON THE DRAWINGS.

HYBRID CABLE INSTALLATION:

A. THE CONTRACTOR SHALL ROUTE, TEST, AND INSTALL ALL CABLES AS INDICATED ON THE CONSTRUCTION DRAWINGS AND IN ACCORDANCE WITH THE MANUFACTURER'S RECOMMENDATIONS.

B. THE INSTALLED RADIUS OF THE CABLES SHALL NOT BE LESS THAN THE MANUFACTURER'S SPECIFICATIONS FOR BENDING RADII.

C. EXTREME CARE SHALL BE TAKEN TO AVOID DAMAGE TO THE CABLES DURING HANDLING AND INSTALLATION.

1. FASTENING MAIN HYBRID CABLES: ALL CABLES SHALL BE INSTALLED INSIDE MONOPOLE WITH CABLE SUPPORT GRIPS AS REQUIRED BY THE MANUFACTURER.

2. FASTENING INDIVIDUAL FIBER AND DC CABLES ABOVE BREAKOUT ENCLOSURE (MEDUSA), WITHIN THE MMBS CABINET AND ANY INTERMEDIATE DISTRIBUTION BOXES:

a. FIBER: SUPPORT FIBER BUNDLES USING 1/2" VELCRO STRAPS OF THE REQUIRED LENGTH AT 18" O.C. STRAPS SHALL BE UV, OIL AND WATER RESISTANT AND SUITABLE FOR INDUSTRIAL INSTALLATIONS AS MANUFACTURED BY TEXTOL OR APPROVED EQUAL.

b. DC: SUPPORT DC BUNDLES WITH ZIP TIES OF THE ADEQUATE LENGTH. ZIP TIES TO BE UV STABILIZED, BLACK NYLON, WITH TENSILE STRENGTH AT 12,000 PSI AS MANUFACTURED BY NELCO PRODUCTS OR EQUAL.

3. FASTENING JUMPERS: SECURE JUMPERS TO THE SIDE ARMS OR HEAD FRAMES USING STAINLESS STEEL TIE WRAPS OR STAINLESS STEEL BUTTERFLY CLIPS.

4. CABLE INSTALLATION:

a. INSPECT CABLE PRIOR TO USE FOR SHIPPING DAMAGE, NOTIFY THE CONSTRUCTION MANAGER.

b. CABLE ROUTING: CABLE INSTALLATION SHALL BE PLANNED TO ENSURE THAT THE LINES WILL BE PROPERLY ROUTED IN THE CABLE ENVELOP AS INDICATED ON THE DRAWINGS. AVOID TWISTING AND CROSSOVERS.

c. HOIST CABLE USING PROPER HOISTING GRIPS. DO NOT EXCEED MANUFACTURER'S RECOMMENDED MAXIMUM BEND RADIUS.

5. GROUNDING OF TRANSMISSION LINES: ALL TRANSMISSION LINES SHALL BE GROUNDED AS INDICATED ON DRAWINGS.

6. HYBRID CABLE COLOR CODING: ALL COLOR CODING SHALL BE AS REQUIRED IN TS 0200 REV 5.

7. HYBRID CABLE LABELING: INDIVIDUAL HYBRID AND DC BUNDLES SHALL BE LABELED ALPHA-NUMERICALLY ACCORDING TO SPRINT CELL SITE ENGINEERING NOTICE – EN 2012-001, REV 1

WEATHERPROOFING EXTERIOR CONNECTORS AND HYBRID CABLE GROUND KITS:

A. ALL FIBER & COAX CONNECTORS AND GROUND KITS SHALL BE WEATHERPROOFED.

B. WEATHERPROOFED USING ONE OF THE FOLLOWING METHODS. ALL INSTALLATIONS MUST BE DONE IN ACCORDANCE WITH THE MANUFACTURER'S RECOMMENDATIONS AND INDUSTRY BEST PRACTICES.

1. COLD SHRINK: ENCOMPASS CONNECTOR IN COLD SHRINK TUBING AND PROVIDE A DOUBLE WRAP OF 2" ELECTRICAL TAPE EXTENDING 2" BEYOND TUBING. PROVIDE 3M COLD SHRINK CXS SERIES OR EQUAL.

2. SELF-AMALGAMATING TAPE: CLEAN SURFACES. APPLY A DOUBLE WRAP OF SELF-AMALGAMATING TAPE 2" BEYOND CONNECTOR. APPLY A SECOND WRAP OF SELF-AMALGAMATING TAPE IN OPPOSITE DIRECTION. APPLY DOUBLE WRAP OF 2" WIDE ELECTRICAL TAPE EXTENDING 2" BEYOND THE SELF-AMALGAMATING TAPE.

3. 3M SLIM LOCK CLOSURE 716: SUBSTITUTIONS WILL NOT BE ALLOWED.

4. OPEN FLAME ON JOB SITE IS NOT ACCEPTABLE

PLANS PREPARED FOR:
Sprint
6580 Sprint Parkway
Overland Park,
Kansas 66251

PLANS PREPARED BY:
BENCHMARK SERVICES, INC.
PO Box 5 318 North Main Street
Huntingburg, Indiana 47542
Phone: (812) 683-3049

MLA PARTNER:
CROWN CASTLE INTERNATIONAL

ENGINEERING LICENSE:
STATE OF OHIO
RALPH M. WALLEM
E-67208
REGISTERED
PROFESSIONAL ENGINEER

DRAWING NOTICE:
THESE DOCUMENTS ARE CONFIDENTIAL AND ARE THE SOLE PROPERTY OF SPRINT AND MAY NOT BE REPRODUCED, DISSEMINATED OR REDISTRIBUTED WITHOUT THE EXPRESS WRITTEN CONSENT OF SPRINT.

REVISIONS:

DESCRIPTION	DATE	BY	REV
RELEASE FOR REVIEW	01/17/14	MCB	A
100% CD'S	02/03/14	DSB	1

SITE NAME:
DUBLIN FIRE STATION

SITE CASCADE:
CB03XC053

SITE ADDRESS:
7673 AVERY RD
DUBLIN,OH 43017

SHEET DESCRIPTION:
SPRINT SPECIFICATIONS

SHEET NUMBER:
SP-1

Bordered: Template 070214-2: Sprint_2.5_Construction_Plans_CB03XC053_REV1-020314.dwg : Feb 03, 2014, 11:23:47 am

SECTION 11 800 – INSTALLATION OF MULTIMODAL BASE STATIONS (MMBS) AND RELATED EQUIPMENT

SUMMARY:

A. THIS SECTION SPECIFIES MMBS CABINETS, POWER CABINETS, AND INTERNAL EQUIPMENT INCLUDING BY NOT LIMITED TO RECTIFIERS, POWER DISTRIBUTION UNITS, BASE BAND UNITS, SURGE ARRESTORS, BATTERIES, AND SIMILAR EQUIPMENT FURNISHED BY THE COMPANY FOR INSTALLATION BY THE CONTRACTOR (OFCI).

B. CONTRACTOR SHALL PROVIDE AND INSTALL ALL MISCELLANEOUS MATERIALS AND PROVIDE ALL LABOR REQUIRED FOR INSTALLATION EQUIPMENT IN EXISTING CABINET OR NEW CABINET AS SHOWN ON DRAWINGS AND AS REQUIRED BY THE APPLICABLE INSTALLATION MOPS.

C. COMPLY WITH MANUFACTURER'S INSTALLATION AND START–UP REQUIREMENTS.

DC CIRCUIT BREAKER LABELING

A. NEW DC CIRCUIT IS REQUIRED IN MMBS CABINET SHALL BE CLEARLY IDENTIFIED AS TO RRU BEING SERVICED.

SECTION 26 100 – BASIC ELECTRICAL REQUIREMENTS

SUMMARY:
THIS SECTION SPECIFIES BASIC ELECTRICAL REQUIREMENTS FOR SYSTEMS AND COMPONENTS.

QUALITY ASSURANCE:

A. ALL EQUIPMENT FURNISHED UNDER DIVISION 26 SHALL CARRY UL LABELS AND LISTINGS WHERE SUCH LABELS AND LISTINGS ARE AVAILABLE IN THE INDUSTRY.

B. MANUFACTURERS OF EQUIPMENT SHALL HAVE A MINIMUM OF THREE YEARS EXPERIENCE WITH THEIR EQUIPMENT INSTALLED AND OPERATING IN THE FIELD IN A USE SIMILAR TO THE PROPOSED USE FOR THIS PROJECT.

C. MATERIALS AND EQUIPMENT: ALL MATERIALS AND EQUIPMENT SPECIFIED IN DIVISION 26 OF THE SAME TYPE SHALL BE OF THE SAME MANUFACTURER AND SHALL BE NEW, OF THE BEST QUALITY AND DESIGN, AND FREE FROM DEFECTS.

SUPPORTING DEVICES:

A. MANUFACTURED STRUCTURAL SUPPORT MATERIALS: SUBJECT TO COMPLIANCE WITH REQUIREMENTS, PROVIDE PRODUCTS BY THE FOLLOWING:

1. ALLIED TUBE AND CONDUIT.
2. B–LINE SYSTEM.
3. UNISTRUT DIVERSIFIED PRODUCTS.
4. THOMAS & BETTS.

B. FASTENERS: TYPES, MATERIALS, AND CONSTRUCTION FEATURES AS FOLLOWS:

1. EXPANSION ANCHORS: CARBON STEEL WEDGE OR SLEEVE TYPE.
2. POWER–DRIVEN THREADED STUDS: HEAT–TREATED STEEL, DESIGNED SPECIFICALLY FOR THE INTENDED SERVICE.
3. FASTEN BY MEANS OF WOOD SCREWS ON WOOD.
4. TOGGLE BOLTS ON HOLLOW MASONRY UNITS.
5. CONCRETE INSERTS OR EXPANSION BOLTS ON CONCRETE OR SOLID MASONRY.
6. MACHINE SCREWS, WELDED THREADED STUDS, OR SPRING–TENSION CLAMPS ON STEEL.
7. EXPLOSIVE DEVICES FOR ATTACHING HANGERS TO STRUCTURE SHALL NOT BE PERMITTED.
8. DO NOT WELD CONDUIT, PIPE STRAPS, OR ITEMS OTHER THAN THREADED STUDS TO STEEL STRUCTURES.
9. IN PARTITIONS OF LIGHT STEEL CONSTRUCTION, USE SHEET METAL SCREWS.

SUPPORTING DEVICES:

A. INSTALL SUPPORTING DEVICES TO FASTEN ELECTRICAL COMPONENTS SECURELY AND PERMANENTLY IN ACCORDANCE WITH NEC.

B. COORDINATE WITH THE BUILDING STRUCTURAL SYSTEM AND WITH OTHER TRADES.

C. UNLESS OTHERWISE INDICATED ON THE DRAWINGS, FASTEN ELECTRICAL ITEMS AND THEIR SUPPORTING HARDWARE SECURELY TO THE STRUCTURE IN ACCORDANCE WITH THE FOLLOWING:

1. ENSURE THAT THE LOAD APPLIED BY ANY FASTENER DOES NOT EXCEED 25 PERCENT OF THE PROOF TEST LOAD.
2. USE VIBRATION AND SHOCK–RESISTANT FASTENERS FOR ATTACHMENTS TO CONCRETE SLABS.

ELECTRICAL IDENTIFICATION:

A. UPDATE AND PROVIDE TYPED CIRCUIT BREAKER SCHEDULES IN THE MOUNTING BRACKET, INSIDE DOORS OF AC PANEL BOARDS WITH ANY CHANGES MADE TO THE AC SYSTEM.

B. BRANCH CIRCUITS FEEDING AVIATION OBSTRUCTION LIGHTING EQUIPMENT SHALL BE CLEARLY IDENTIFIED AS SUCH AT THE BRANCH CIRCUIT PANELBOARD.

SECTION 26 200 – ELECTRICAL MATERIALS AND EQUIPMENT

CONDUIT:

A. RIGID GALVANIZED STEEL (RGS) CONDUIT SHALL BE USED FOR EXTERIOR LOCATIONS ABOVE GROUND AND IN UNFINISHED INTERIOR LOCATIONS AND FOR UNDERGROUND RUNS. RIGID CONDUIT AND FITTINGS SHALL BE STEEL, COATED WITH ZINC EXTERIOR AND INTERIOR BY THE HOT DIP GALVANIZING PROCESS. CONDUIT SHALL BE PRODUCED TO ANSI SPECIFICATIONS C80.1, FEDERAL SPECIFICATION WW–C–581 AND SHALL BE LISTED WITH THE UNDERWRITERS' LABORATORIES. FITTINGS SHALL BE THREADED – SET SCREW OR COMPRESSION FITTINGS WILL NOT BE ACCEPTABLE. RGS CONDUITS SHALL BE MANUFACTURED BY ALLIED, REPUBLIC OR WHEATLAND.

B. UNDERGROUND CONDUIT IN CONCRETE SHALL BE POLYVINYLCHLORIDE (PVC) SUITABLE FOR DIRECT BURIAL AS APPLICABLE. JOINTS SHALL BE BELLED, AND FLUSH SOLVENT WELDED IN ACCORDANCE WITH MANUFACTURER'S INSTRUCTIONS. CONDUIT SHALL BE CARLON ELECTRICAL PRODUCTS OR APPROVED EQUAL.

C. TRANSITIONS BETWEEN PVC AND RIGID (RGS) SHALL BE MADE WITH PVC COATED METALLIC LONG SWEEP RADIUS ELBOWS.

D. EMT OR RIGID GALVANIZED STEEL CONDUIT MAY BE USED IN FINISHED SPACES CONCEALED IN WALLS AND CEILINGS. EMT SHALL BE MILD STEEL, ELECTRICALLY WELDED, ELECTRO–GALVANIZED OR HOT–DIPPED GALVANIZED AND PRODUCED TO ANSI SPECIFICATION C80.3, FEDERAL SPECIFICATION WW–C–563, AND SHALL BE UL LISTED. EMT SHALL BE MANUFACTURED BY ALLIED, REPUBLIC OR WHEATLAND, OR APPROVED EQUAL. FITTINGS SHALL BE METALLIC COMPRESSION. SET SCREW CONNECTIONS SHALL NOT BE ACCEPTABLE.

E. LIQUID TIGHT FLEXIBLE METALLIC CONDUIT SHALL BE USED FOR FINAL CONNECTION TO EQUIPMENT. FITTINGS SHALL BE METALLIC GLAND TYPE COMPRESSION FITTINGS, MAINTAINING THE INTEGRITY OF CONDUIT SYSTEM. SET SCREW CONNECTIONS SHALL NOT BE ACCEPTABLE. MAXIMUM LENGTH OF FLEXIBLE CONDUIT SHALL NOT EXCEED 6–FEET. LFMC SHALL BE PROTECTED AND SUPPORTED AS REQUIRED BY NEC. MANUFACTURERS OF FLEXIBLE CONDUITS SHALL BE CAROL, ANACONDA METAL HOSE OR UNIVERSAL METAL HOSE, OR APPROVED EQUAL.

F. MINIMUM SIZE CONDUIT SHALL BE 3/4 INCH (21MM).

HUBS AND BOXES:

A. AT ENTRANCES TO CABINETS OR OTHER EQUIPMENT NOT HAVING INTEGRAL THREADED HUBS PROVIDE METALLIC THREADED HUBS OF THE SIZE AND CONFIGURATION REQUIRED. HUB SHALL INCLUDE LOCKNUT AND NEOPRENE O–RING SEAL. PROVIDE IMPACT RESISTANT 105 DEGREE C PLASTIC BUSHINGS TO PROTECT CABLE INSULATION.

B. CABLE TERMINATION FITTINGS FOR CONDUIT

1. CABLE TERMINATORS FOR RGS CONDUITS SHALL BE TYPE CRC BY O–Z/GEDNEY OR EQUAL BY ROXTEC.
2. CABLE TERMINATORS FOR LFMC SHALL BE ETCO – CL2075; OR MADE FOR THE PURPOSE PRODUCTS BY ROXTEC.

C. EXTERIOR PULL BOXES AND PULL BOXES IN INTERIOR INDUSTRIAL AREAS SHALL BE PLATED CAST ALLOY, HEAVY DUTY, WEATHERPROOF, DUST PROOF, WITH GASKET, PLATED IRON ALLOY COVER AND STAINLESS STEEL COVER SCREWS, CROUSE–HINDS WAB SERIES OR EQUAL.

D. CONDUIT OUTLET BODIES SHALL BE PLATED CAST ALLOY WITH SIMILAR GASKET COVERS. OUTLET BODIES SHALL BE OF THE CONFIGURATION AND SIZE SUITABLE FOR THE APPLICATION. PROVIDE CROUSE–HINDS FORM 8 OR EQUAL.

E. MANUFACTURER FOR BOXES AND COVERS SHALL BE HOFFMAN, SQUARE "D", CROUSE–HINDS, COOPER, ADALET, APPLETON, O–Z GEDNEY, RACO, OR APPROVED EQUAL.

SUPPLEMENTAL GROUNDING SYSTEM:

A. FURNISH AND INSTALL A SUPPLEMENTAL GROUNDING SYSTEM TO THE EXTENT INDICATED ON THE DRAWINGS. SUPPORT SYSTEM WITH NON–MAGNETIC STAINLESS STEEL CLIPS WITH RUBBER GROMMETS. GROUNDING CONNECTORS SHALL BE TINNED COPPER WIRE, SIZES AS INDICATED ON THE DRAWINGS. PROVIDE STRANDED OR SOLID BARE OR INSULATED CONDUCTORS EXCEPT AS OTHERWISE NOTED.

B. SUPPLEMENTAL GROUNDING SYSTEM: ALL CONNECTIONS TO BE MADE WITH CAD WELDS, EXCEPT AT EQUIPMENT USE LUGS OR OTHER AVAILABLE GROUNDING MEANS AS REQUIRED BY MANUFACTURER; AT GROUND BARS USE TWO HOLE SPADES WITH NO–OX.

C. STOLEN GROUND–BARS: IN THE EVENT OF STOLEN GROUND BARS, CONTACT SPRINT CM FOR REPLACEMENT INSTRUCTION USING THREADED ROD KITS.

EXISTING STRUCTURE:

A. EXISTING EXPOSED WIRING AND ALL EXPOSED OUTLETS, RECEPTACLES, SWITCHES, DEVICES, BOXES, AND OTHER EQUIPMENT THAT ARE NOT TO BE UTILIZED IN THE COMPLETED PROJECT SHALL BE REMOVED OR DE–ENERGIZED AND CAPPED IN THE WALL, CEILING, OR FLOOR SO THAT THEY ARE CONCEALED AND SAFE. WALL, CEILING, OR FLOOR SHALL BE PATCHED TO MATCH THE ADJACENT CONSTRUCTION.

CONDUIT AND CONDUCTOR INSTALLATION:

A. CONDUITS SHALL BE FASTENED SECURELY IN PLACE WITH APPROVED NON–PERFORATED STRAPS AND HANGERS. EXPLOSIVE DEVICES FOR ATTACHING HANGERS TO STRUCTURE WILL NOT BE PERMITTED. CLOSELY FOLLOW THE LINES OF THE STRUCTURE, MAINTAIN CLOSE PROXIMITY TO THE STRUCTURE AND KEEP CONDUITS IN TIGHT ENVELOPES. CHANGES IN DIRECTION TO ROUTE AROUND OBSTACLES SHALL BE MADE WITH CONDUIT OUTLET BODIES. CONDUIT SHALL BE INSTALLED IN A NEAT AND WORKMANLIKE MANNER, PARALLEL AND PERPENDICULAR TO STRUCTURE WALL AND CEILING LINES. ALL CONDUIT SHALL BE FISHED TO CLEAR OBSTRUCTIONS. ENDS OF CONDUITS SHALL BE TEMPORARILY CAPPED TO PREVENT CONCRETE, PLASTER OR DIRT FROM ENTERING. CONDUITS SHALL BE RIGIDLY CLAMPED TO BOXES BY GALVANIZED MALLEABLE IRON BUSHING ON INSIDE AND GALVANIZED MALLEABLE IRON LOCKNUT ON OUTSIDE AND INSIDE.

B. CONDUCTORS SHALL BE PULLED IN ACCORDANCE WITH ACCEPTED GOOD PRACTICE.

PLANS PREPARED FOR:

Sprint
6580 Sprint Parkway
Overland Park,
Kansas 66251

PLANS PREPARED BY:

BENCHMARK SERVICES, INC.
PO Box 5 318 North Main Street
Huntingburg, Indiana 47542
Phone: (812) 683-3049

MLA PARTNER:

CROWN CASTLE INTERNATIONAL

ENGINEERING LICENSE:

STATE OF OHIO
RALPH M. WALLEM
E-67208
REGISTERED PROFESSIONAL ENGINEER

DRAWING NOTICE:

THESE DOCUMENTS ARE CONFIDENTIAL AND ARE THE SOLE PROPERTY OF SPRINT AND MAY NOT BE REPRODUCED, DISSEMINATED OR REDISTRIBUTED WITHOUT THE EXPRESS WRITTEN CONSENT OF SPRINT.

REVISIONS:

DESCRIPTION	DATE	BY	REV
RELEASE FOR REVIEW	01/17/14	MCB	A
100% CD'S	02/03/14	DSB	1

SITE NAME:

DUBLIN FIRE STATION

SITE CASCADE:

CB03XC053

SITE ADDRESS:

7673 AVERY RD
DUBLIN,OH 43017

SHEET DESCRIPTION:

SPRINT SPECIFICATIONS

SHEET NUMBER:

SP-2

Bordered Template 010214-2: Sprint 2.5_Construction_Plans_DB03XC053_REV1-020314.dwg : Feb 03, 2014, 11:23:48 am

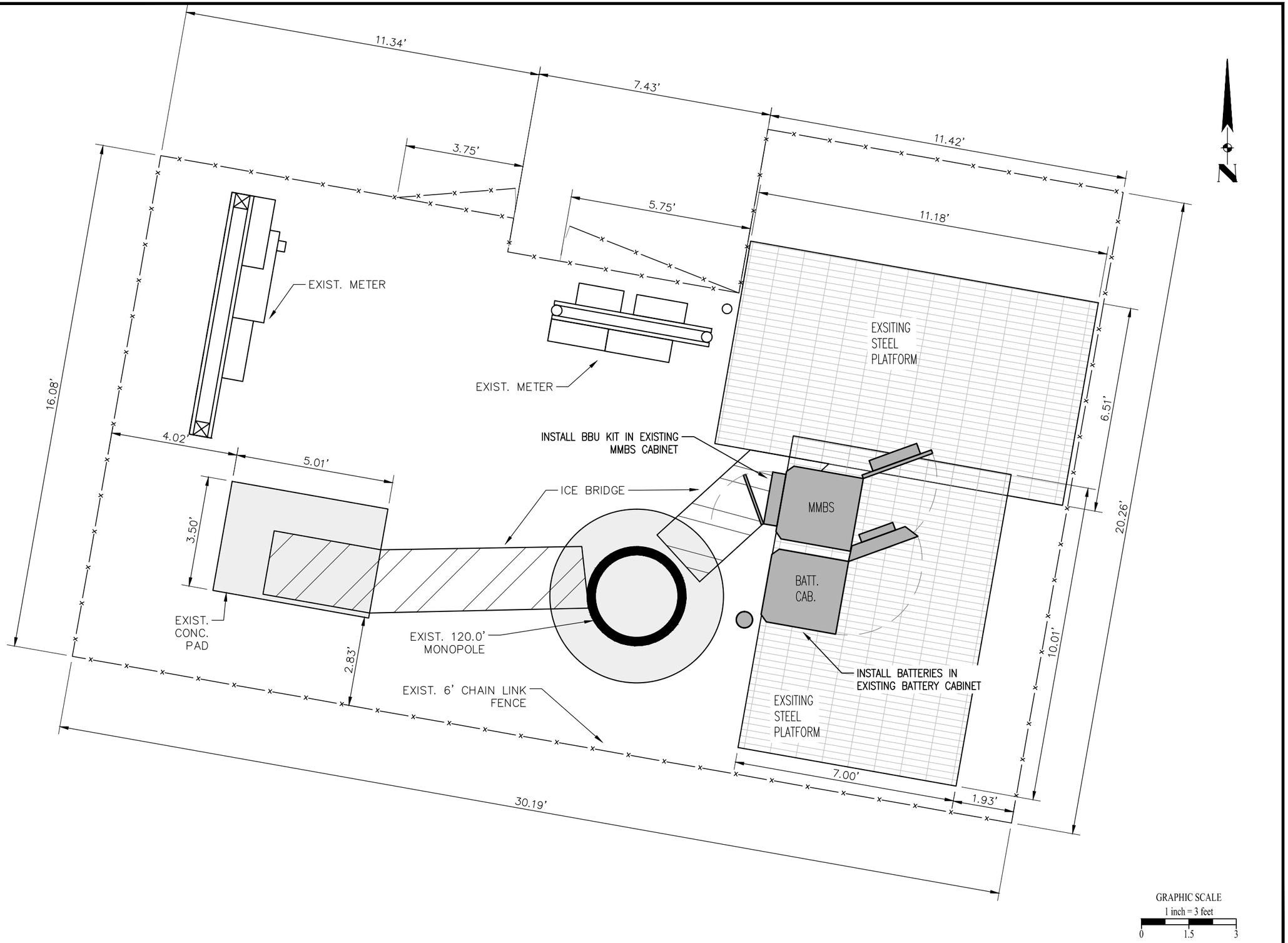

GRAPHIC SCALE
1 inch = 3 feet
0 1.5 3

SITE PLAN

SEE GRAPHIC SCALE BAR AND LABEL

1

PLANS PREPARED FOR:

Sprint
6580 Sprint Parkway
Overland Park,
Kansas 66251

PLANS PREPARED BY:

BENCHMARK SERVICES, INC.
PO Box 5 318 North Main Street
Huntingburg, Indiana 47542
Phone: (812) 683-3049

MLA PARTNER:

CROWN CASTLE INTERNATIONAL

ENGINEERING LICENSE:

STATE OF OHIO
RALPH M. WALLEM
E-67208
REGISTERED
PROFESSIONAL ENGINEER

DRAWING NOTICE:

THESE DOCUMENTS ARE CONFIDENTIAL AND ARE THE SOLE PROPERTY OF SPRINT AND MAY NOT BE REPRODUCED, DISSEMINATED OR REDISTRIBUTED WITHOUT THE EXPRESS WRITTEN CONSENT OF SPRINT.

REVISIONS:

DESCRIPTION	DATE	BY	REV
RELEASE FOR REVIEW	01/17/14	MCB	A
100% CD'S	02/03/14	DSB	1

SITE NAME:

DUBLIN FIRE STATION

SITE CASCADE:

CB03XC053

SITE ADDRESS:

7673 AVERY RD
DUBLIN,OH 43017

SHEET DESCRIPTION:

SITE PLAN

SHEET NUMBER:

A-1

Bentleyset Template 010214-2- Sprint 2.5 Construction (Plans_CB03XC053_REV1-020314).dwg : Feb 03, 2014, 11:23:49 am

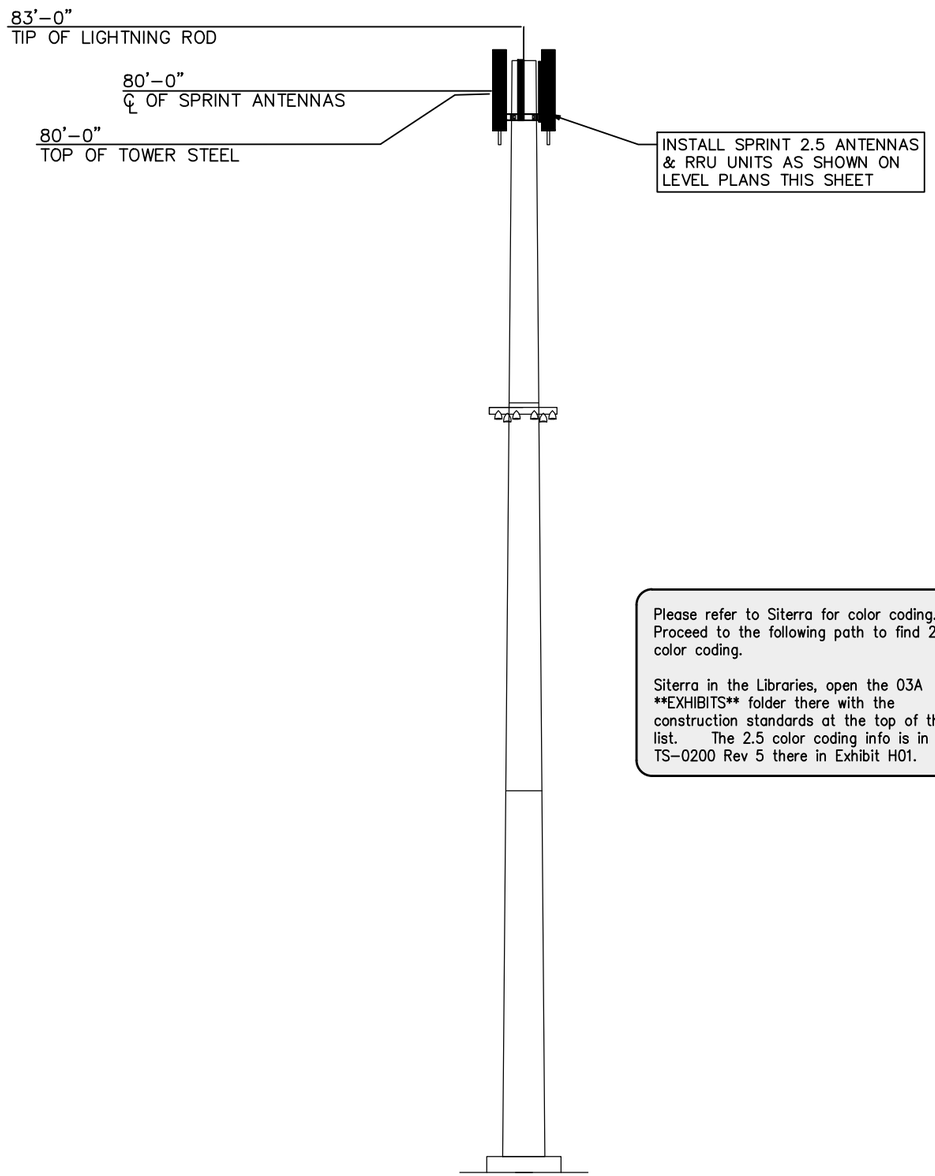

Please refer to Siterra for color coding. Proceed to the following path to find 2.5 color coding.

Siterra in the Libraries, open the 03A **EXHIBITS** folder there with the construction standards at the top of the list. The 2.5 color coding info is in TS-0200 Rev 5 there in Exhibit H01.

FINAL TOWER ELEVATION

SCALE: N.T.S.

1

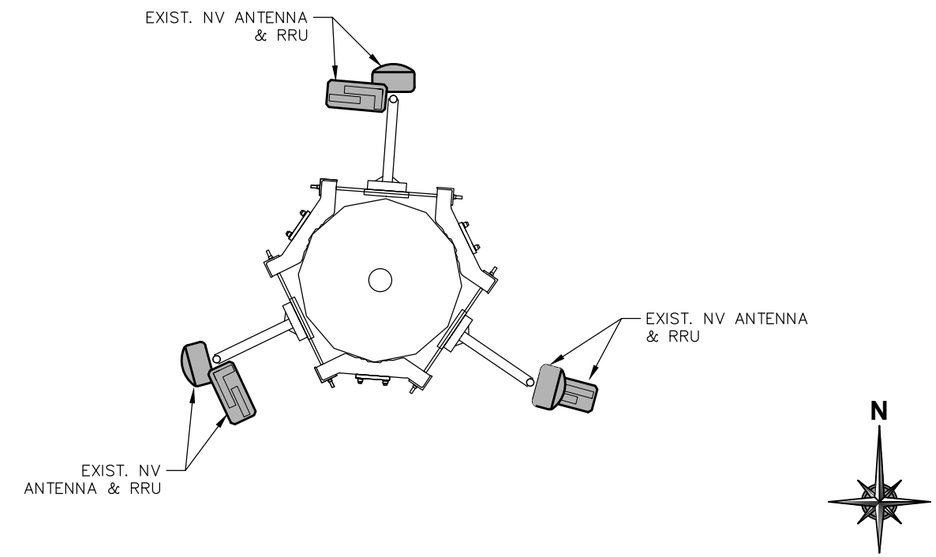

EXISTING ANTENNA & RRU LAYOUT

SCALE: N.T.S.

2

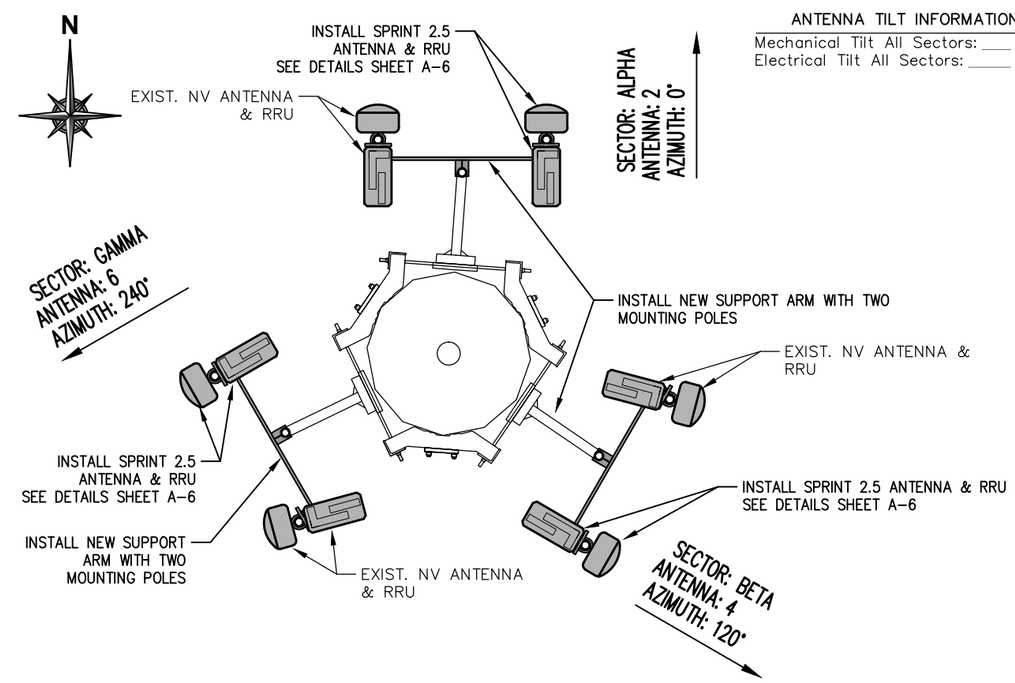

ANTENNA TILT INFORMATION

Mechanical Tilt All Sectors: ____ 0°

Electrical Tilt All Sectors: _____ -2°

This tower has been evaluated by Paul J. Ford and Co. on November 27th, 2013. No structural improvements are required.

FINAL ANTENNA & RRU LAYOUT

SCALE: N.T.S.

3

PLANS PREPARED FOR:

Sprint
6580 Sprint Parkway
Overland Park,
Kansas 66251

PLANS PREPARED BY:

BENCHMARK SERVICES, INC.
PO Box 5 318 North Main Street
Huntingburg, Indiana 47542
Phone: (812) 683-3049

MLA PARTNER:

CROWN CASTLE INTERNATIONAL

ENGINEERING LICENSE:

STATE OF OHIO
RALPH M. WALLEM
E-67208
REGISTERED PROFESSIONAL ENGINEER

DRAWING NOTICE:

THESE DOCUMENTS ARE CONFIDENTIAL AND ARE THE SOLE PROPERTY OF SPRINT AND MAY NOT BE REPRODUCED, DISSEMINATED OR REDISTRIBUTED WITHOUT THE EXPRESS WRITTEN CONSENT OF SPRINT.

REVISIONS:

DESCRIPTION	DATE	BY	REV
RELEASE FOR REVIEW	01/17/14	MCB	A
100% CD'S	02/03/14	DSB	1

SITE NAME:

DUBLIN FIRE STATION

SITE CASCADE:

CB03XC053

SITE ADDRESS:

7673 AVERY RD
DUBLIN,OH 43017

SHEET DESCRIPTION:

TOWER ELEVATIONS & ANTENNA DETAILS

SHEET NUMBER:

A-2

Bordered Template 010214-2: Sprint 2.5 Construction Plans_CB03XC053_[REV1-020314].dwg : Feb 03, 2014, 11:23:51 am

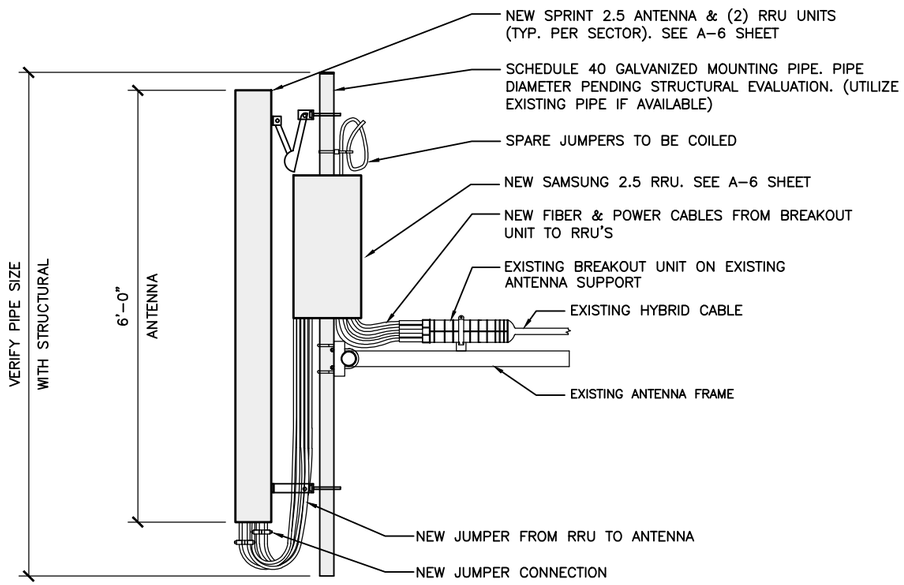

ANTENNA MOUNT DETAIL

SCALE: N.T.S.

1

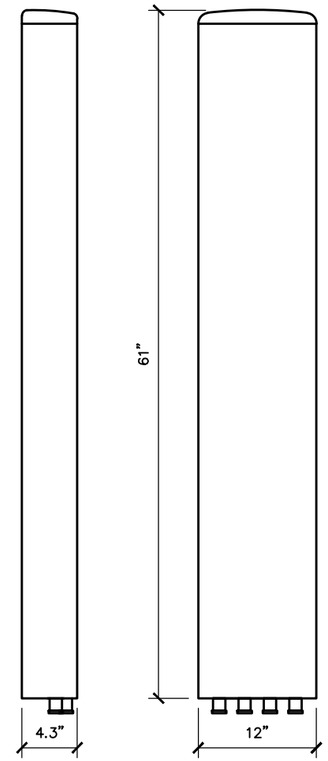

KMW ANTENNA
ET-X-WM-18-65-8P

DIMENSIONS, HxWxD:	1829x300x150mm (61"x12"x4.3")
WEIGHT, WITH PRE-MOUNTED BRACKETS:	36.4 lbs
CONNECTOR:	8 x MINI DIN(Female), 1 Calibration Port(N type, Female) / Bottom

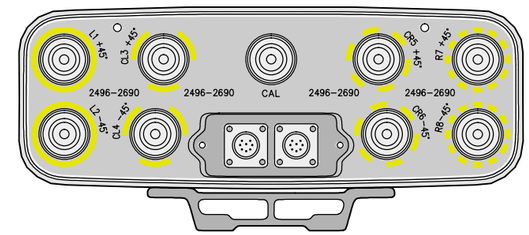

2.5 ANTENNA DETAIL

SCALE: N.T.S.

2

NOT USED

SCALE: N.T.S.

4

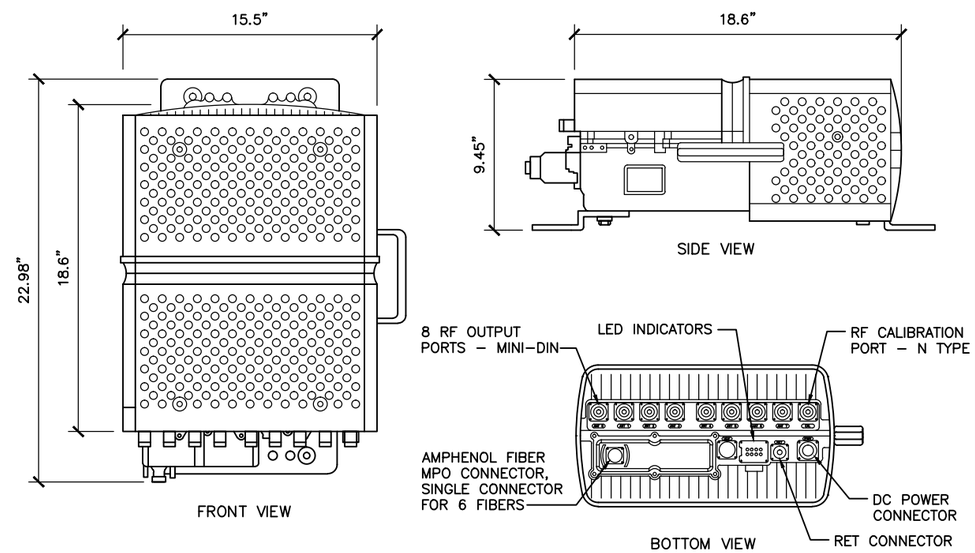

DIMENSIONS, HxWxD:	(18.6"x15.5"x9.45")
RRU WEIGHT:	59.5 lbs
MOUNTING KIT WEIGHT:	12.32 lbs

2.5 RRU DETAIL

SCALE: N.T.S.

3

PLANS PREPARED FOR:

Sprint
6580 Sprint Parkway
Overland Park,
Kansas 66251

PLANS PREPARED BY:

BENCHMARK SERVICES, INC.
PO Box 5 318 North Main Street
Huntingburg, Indiana 47542
Phone: (812) 683-3049

MLA PARTNER:

CROWN CASTLE INTERNATIONAL

ENGINEERING LICENSE:

STATE OF OHIO
RALPH M. WALLEM
E-67208
REGISTERED
PROFESSIONAL ENGINEER

DRAWING NOTICE:

THESE DOCUMENTS ARE CONFIDENTIAL AND ARE THE SOLE PROPERTY OF SPRINT AND MAY NOT BE REPRODUCED, DISSEMINATED OR REDISTRIBUTED WITHOUT THE EXPRESS WRITTEN CONSENT OF SPRINT.

REVISIONS:

DESCRIPTION	DATE	BY	REV
RELEASE FOR REVIEW	01/17/14	MCB	A
100% CD'S	02/03/14	DSB	1

SITE NAME:

DUBLIN FIRE STATION

SITE CASCADE:

CB03XC053

SITE ADDRESS:

7673 AVERY RD
DUBLIN,OH 43017

SHEET DESCRIPTION:

ANTENNA & HYBRID CABLE DETAILS

SHEET NUMBER:

A-3

Bordered Template 010214-2, Sprint 2.5, Construction Plans, CB03XC053, [REV1-020314].dwg : Feb 03, 2014, 11:23:53 am

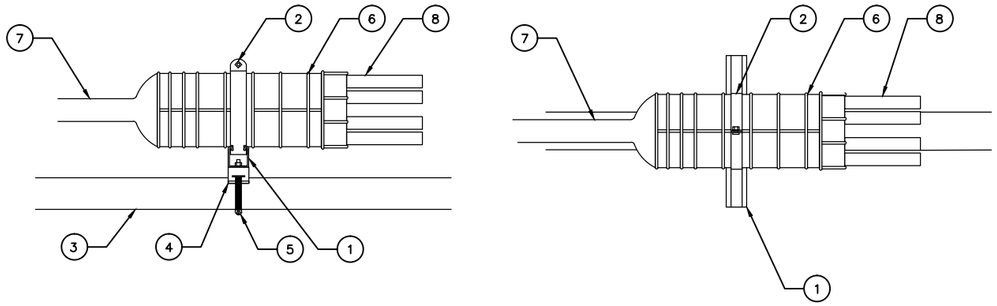

NOTES:

1. 1-5/8" x 1-5/8" UNISTRUT (6" LONG)
2. 4" PIPE HANGER
3. EXISTING SUPPORT PIPE
4. STANDOFF BRACKET ANDREW PART NO. 30848-4. CONTRACTOR TO SUPPLY 3/8" CONNECTION HARDWARE
5. ROUND MEMBER ADAPTER SIZED FOR PIPE SUPPORT
6. CABLE BREAKOUT UNIT
7. NEW OR EXISTING HYBRID CABLE (SEE PLANS)
8. NEW FIBER & POWER CABLES FROM BREAKOUT

HYBRID BREAKOUT DETAIL

SCALE: N.T.S.

1

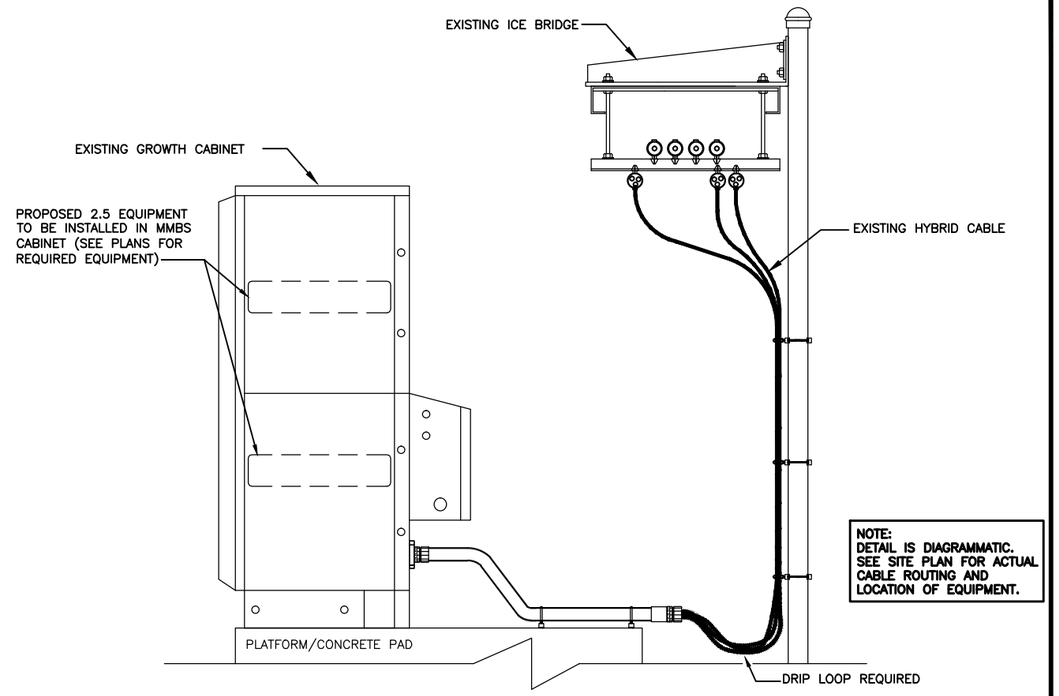

NOTE:
DETAIL IS DIAGRAMMATIC. SEE SITE PLAN FOR ACTUAL CABLE ROUTING AND LOCATION OF EQUIPMENT.

TYPICAL CABLE ROUTE FROM EXISTING MMBS CABINET

SCALE: N.T.S.

2

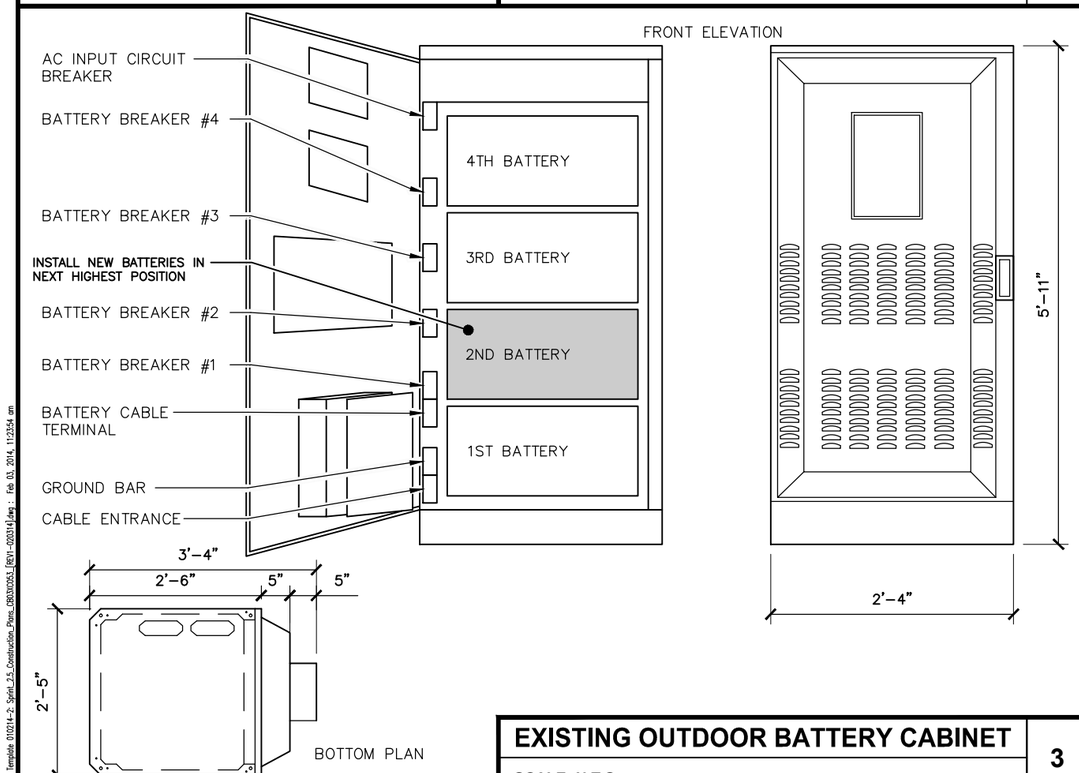

EXISTING OUTDOOR BATTERY CABINET

SCALE: N.T.S.

3

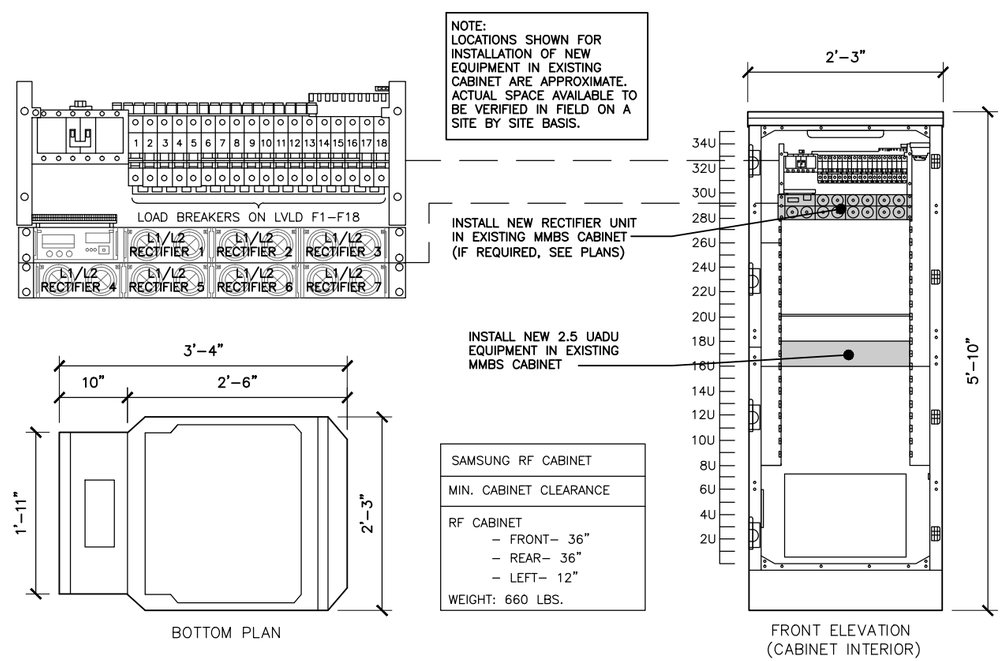

NOTE:
LOCATIONS SHOWN FOR INSTALLATION OF NEW EQUIPMENT IN EXISTING CABINET ARE APPROXIMATE. ACTUAL SPACE AVAILABLE TO BE VERIFIED IN FIELD ON A SITE BY SITE BASIS.

INSTALL NEW RECTIFIER UNIT IN EXISTING MMBS CABINET (IF REQUIRED, SEE PLANS)

INSTALL NEW 2.5 UADU EQUIPMENT IN EXISTING MMBS CABINET

SAMSUNG RF CABINET
MIN. CABINET CLEARANCE
RF CABINET – FRONT– 36" – REAR– 36" – LEFT– 12" WEIGHT: 660 LBS.

EXISTING OUTDOOR MMBS CABINET

SCALE: N.T.S.

4

PLANS PREPARED FOR:

Sprint
6580 Sprint Parkway
Overland Park,
Kansas 66251

PLANS PREPARED BY:

BENCHMARK SERVICES, INC.
PO Box 5 318 North Main Street
Huntingburg, Indiana 47542
Phone: (812) 683-3049

MLA PARTNER:

CROWN CASTLE INTERNATIONAL

ENGINEERING LICENSE:

STATE OF OHIO
RALPH M. WALLEM
E-67208
REGISTERED
PROFESSIONAL ENGINEER

DRAWING NOTICE:

THESE DOCUMENTS ARE CONFIDENTIAL AND ARE THE SOLE PROPERTY OF SPRINT AND MAY NOT BE REPRODUCED, DISSEMINATED OR REDISTRIBUTED WITHOUT THE EXPRESS WRITTEN CONSENT OF SPRINT.

REVISIONS:

DESCRIPTION	DATE	BY	REV
RELEASE FOR REVIEW	01/17/14	MCB	A
100% CD'S	02/03/14	DSB	1

SITE NAME:

DUBLIN FIRE STATION

SITE CASCADE:

CB03XC053

SITE ADDRESS:

7673 AVERY RD
DUBLIN,OH 43017

SHEET DESCRIPTION:

BREAKOUT & EQUIPMENT DETAILS

SHEET NUMBER:

A-4

Bordered Template 010214-2, Sprint 2.5, Construction Plans, CB03XC053_REV1-020314.dwg : Feb 03, 2014, 11:23:54 am

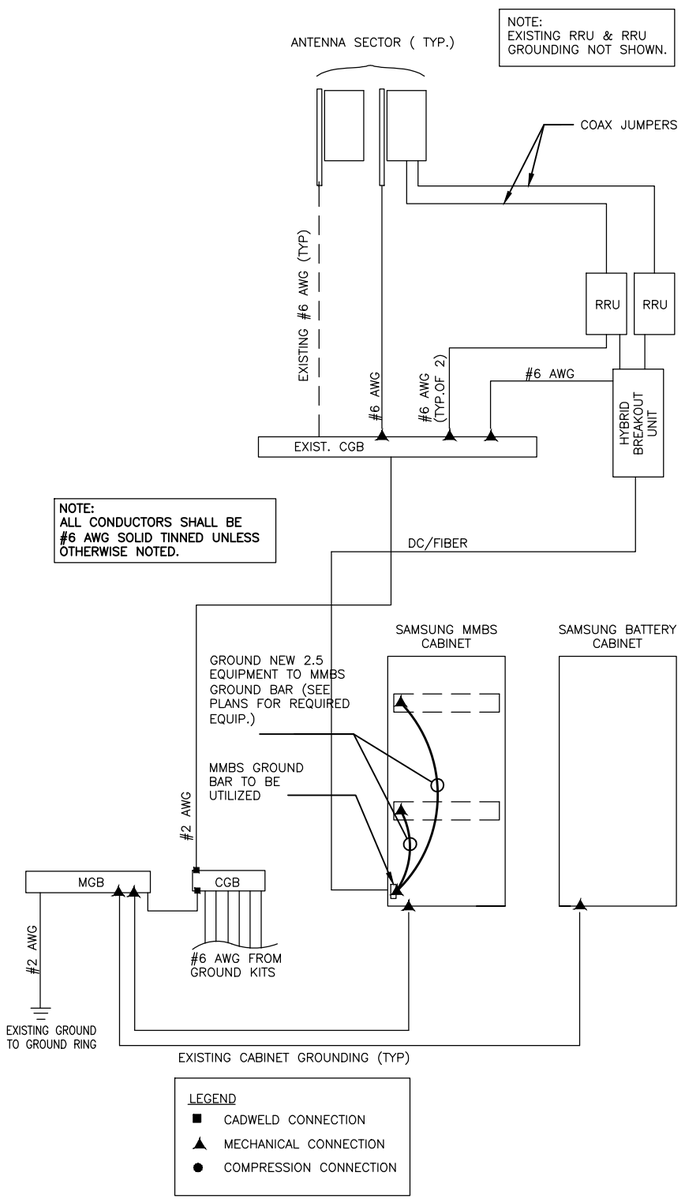

GROUNDING RISER DIAGRAM

SCALE: N.T.S.

1

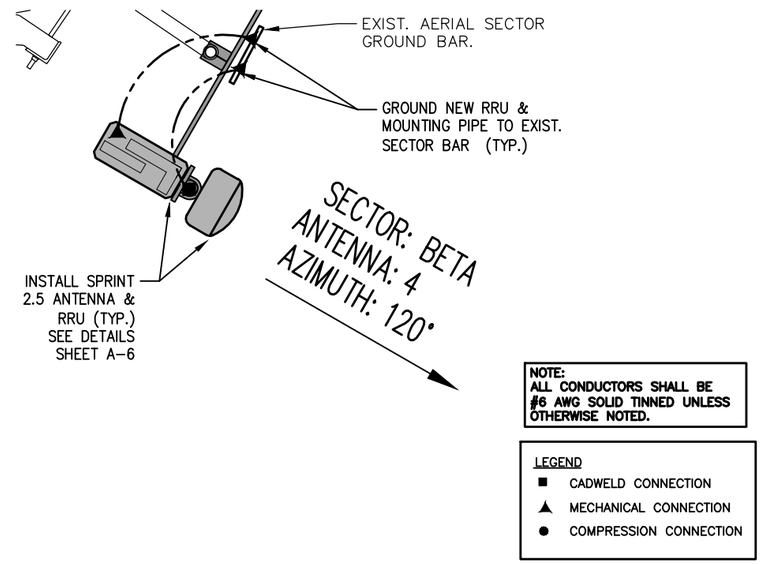

ANTENNA GROUNDING PLAN

SCALE: N.T.S.

2

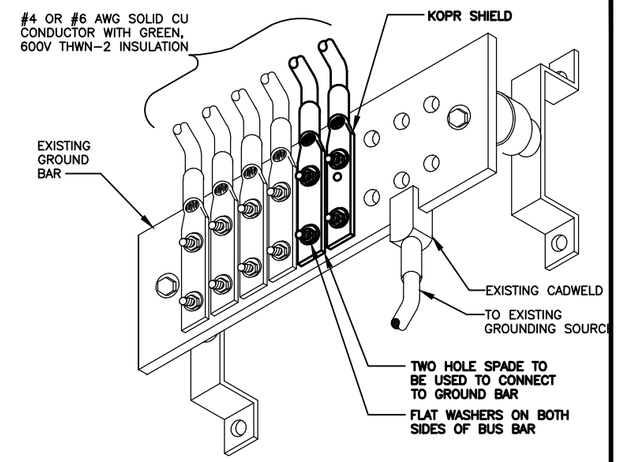

NOTES:

1. APPLY NO-OX TO LUG AND GROUND BAR CONTACT SURFACE. DO NOT COAT INLINE LUG.

2. IF STOLEN GROUND BARS ARE ENCOUNTERED, CONTACT SPRINT CM FOR REPLACEMENT THREADED ROD KIT.

GROUNDING CONDUCTOR INSTALLATION

SCALE: N.T.S.

3

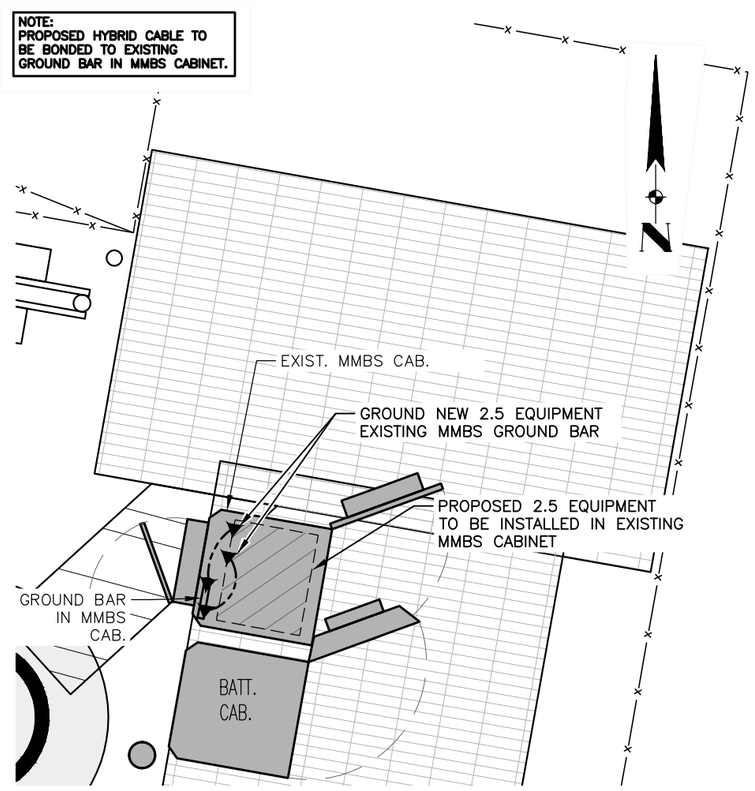

GRAPHIC SCALE
1 inch = 3 feet
0 1.5 3

EQUIPMENT GROUNDING PLAN

SEE GRAPHIC SCALE BAR & LABEL

4

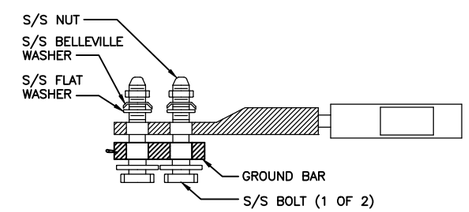

NOTES:

1. PROVIDE 2-HOLE, LONG BARREL, TINNED SOLID COPPER LUGS WHEREVER LUGS ARE SHOWN. ERICO B-122-CE PREFERRED WITH CADWELD TYPE GL CONNECTION. THOMAS AND BETTS 54800BE SERIES WHERE CRIMP CONNECTOR IS REQUIRED.

2. ALL CRIMP CONNECTIONS MUST BE MADE USING HYDRAULIC TOOLS AND THREE POINT HEXAGONAL COMPRESSION MOLDS ON LONG BARREL LUGS.

3. ALL MECHANICAL CONNECTIONS MUST BE MADE USING THOMAS AND BETTS "KOPR-SHIELD". COAT ALL WIRES BEFORE LUGGING. COAT ALL SURFACES BEFORE CONNECTING.

4. ALL HARDWARE 18/8 STAINLESS STEEL INCLUDING BELLEVILLE, COAT ALL SURFACES WITH "KOPR-SHIELD" BEFORE MATING.

5. FOR GROUNDING BOND TO STEEL ONLY: INSERT A DRAGON TOOTH WASHER BETWEEN LUG AND STEEL, COAT ALL SURFACES WITH "KOPR-SHIELD".

6. NO SLOTTED HOLES ON BUS BAR OR LUGS ARE PERMITTED.

7. ALL LUG SHANKS AND LEAD JOINTS SHALL HAVE HEAT SHRINK MATERIAL

TWO HOLE LUG

SCALE: N.T.S.

5

PLANS PREPARED FOR:

Sprint
6580 Sprint Parkway
Overland Park,
Kansas 66251

PLANS PREPARED BY:

BENCHMARK SERVICES, INC.
PO Box 5 318 North Main Street
Huntingburg, Indiana 47542
Phone: (812) 683-3049

MLA PARTNER:

CROWN CASTLE INTERNATIONAL

ENGINEERING LICENSE:

STATE OF OHIO
RALPH M. WALLEM
E-67208
REGISTERED PROFESSIONAL ENGINEER

DRAWING NOTICE:

THESE DOCUMENTS ARE CONFIDENTIAL AND ARE THE SOLE PROPERTY OF SPRINT AND MAY NOT BE REPRODUCED, DISSEMINATED OR REDISTRIBUTED WITHOUT THE EXPRESS WRITTEN CONSENT OF SPRINT.

REVISIONS:

DESCRIPTION	DATE	BY	REV
RELEASE FOR REVIEW	01/17/14	MCB	A
100% CD'S	02/03/14	DSB	1

SITE NAME:

DUBLIN FIRE STATION

SITE CASCADE:

CB03XC053

SITE ADDRESS:

7673 AVERY RD
DUBLIN,OH 43017

SHEET DESCRIPTION:

GROUNDING DETAILS

SHEET NUMBER:

E-1

Bordered Template 010214-2: Sprint_2.5_Construction_Plans_CB03XC053_(REV1-020314).dwg : Feb 03, 2014, 11:23:56 am

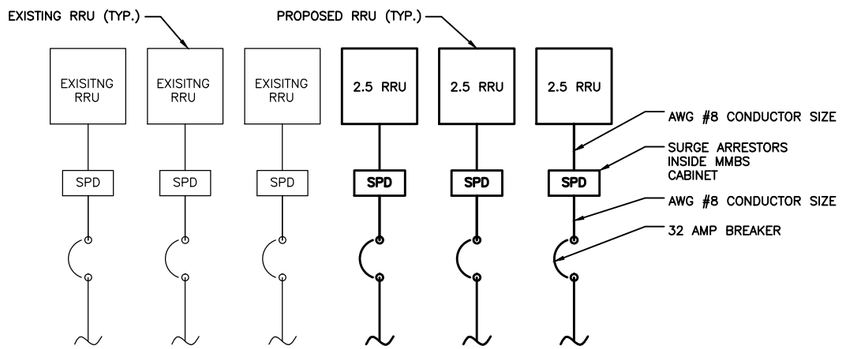

NOTE: THIS DETAIL SHOWS TYPICAL DC LINE REQUIREMENTS FOR EXISTING AND PROPOSED RRU'S. THE DETAIL IS NOT INTENDED TO SHOW ACTUAL NUMBER OF EXISTING AND PROPOSED RRU'S. SEE SHEET A-2 (LEVEL PLANS) FOR THE NUMBER AND PLACEMENT OF ACTUAL RRU'S

DC ONE-LINE DIAGRAM

SCALE: N.T.S.

3

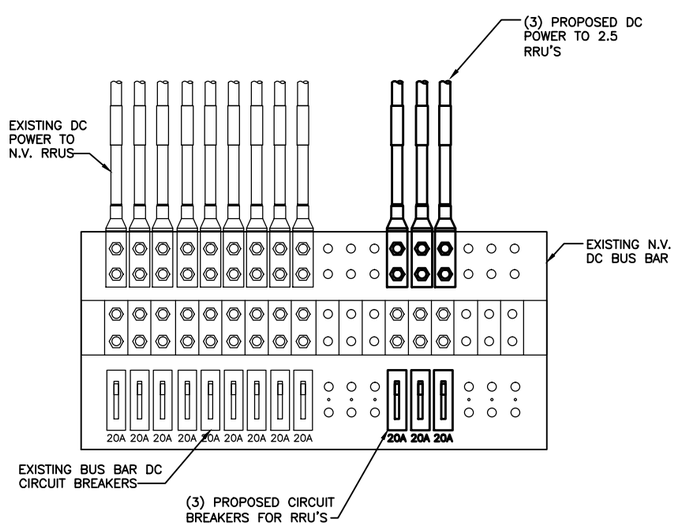

NOTE: THIS DETAIL SHOWS TYPICAL DC LINE REQUIREMENTS FOR EXISTING AND PROPOSED CONNECTIONS. THE DETAIL IS NOT INTENDED TO SHOW ACTUAL NUMBER OF EXISTING AND PROPOSED RRU'S. SEE SHEET A-2 (LEVEL PLANS) FOR THE NUMBER AND PLACEMENT OF ACTUAL RRU'S

DC POWER DISTRIBUTION

SCALE: N.T.S.

2

NOT USED

SCALE: N.T.S.

4

CIRCUIT SCHEDULE

NO	FROM	TO	CONFIGURATION
1	UTILITY SOURCE	METER/DISCONNECT	EXISTING
2	METER/DISCONNECT	TRANSFER & LOAD CENTER	EXISTING
3	TRANSFER & LOAD CENTER	GENERATOR RECEPTACLE	EXISTING
4	TRANSFER & LOAD CENTER	EXISTING MMBS CABINET	(3) #2 AWG, (1) #8 GND IN 1-1/2" CONDUIT
5	TRANSFER & LOAD CENTER	EXISTING BBU CABINET	(2) #12 AWG, (1) #12 GND IN 3/4" CONDUIT

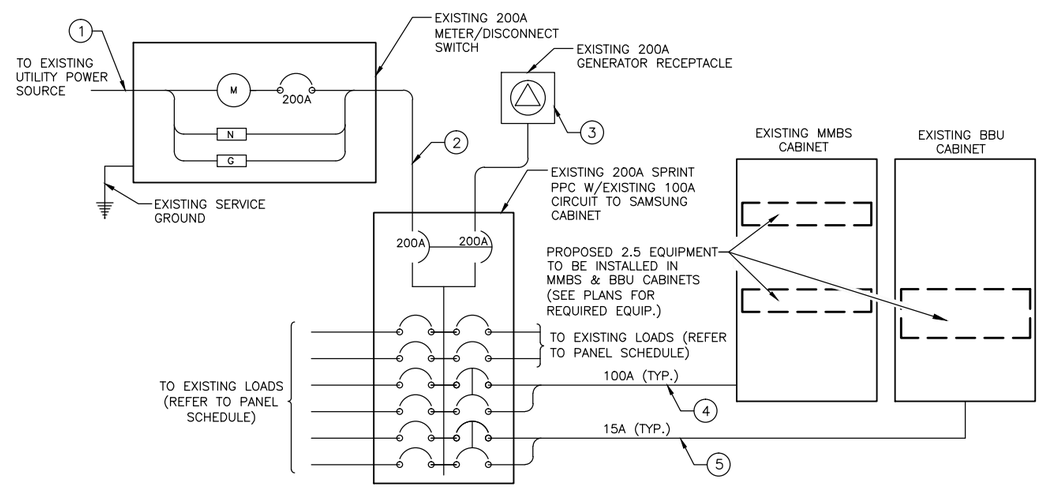

ELECTRICAL ONE-LINE DIAGRAM

SCALE: N.T.S.

1

PLANS PREPARED FOR:

Sprint
6580 Sprint Parkway
Overland Park,
Kansas 66251

PLANS PREPARED BY:

BENCHMARK SERVICES, INC.
PO Box 5 318 North Main Street
Huntingburg, Indiana 47542
Phone: (812) 683-3049

MLA PARTNER:

CROWN CASTLE INTERNATIONAL

ENGINEERING LICENSE:

STATE OF OHIO
RALPH M. WALLEM
E-67208
REGISTERED
PROFESSIONAL ENGINEER

DRAWING NOTICE:

THESE DOCUMENTS ARE CONFIDENTIAL AND ARE THE SOLE PROPERTY OF SPRINT AND MAY NOT BE REPRODUCED, DISSEMINATED OR REDISTRIBUTED WITHOUT THE EXPRESS WRITTEN CONSENT OF SPRINT.

REVISIONS:

DESCRIPTION	DATE	BY	REV
RELEASE FOR REVIEW	01/17/14	MCB	A
100% CD'S	02/03/14	DSB	1

SITE NAME:

DUBLIN FIRE STATION

SITE CASCADE:

CB03XC053

SITE ADDRESS:

7673 AVERY RD
DUBLIN,OH 43017

SHEET DESCRIPTION:

DC POWER DETAILS & PANEL SCHEDULES

SHEET NUMBER:

E-2

Borderset Template 010214-2: Sprint_2.5_Construction_Plans_CB03XC053_[REV1-020314].dwg : Feb 03, 2014, 11:22:58 am

PAUL J. FORD AND COMPANY
STRUCTURAL ENGINEERS
250 East Broad Street • Suite 600 • Columbus, Ohio 43215-3708

Date: **November 27, 2013**

Michael Murray
Crown Castle
5350 North 48th Street, Suite 305
Chandler, AZ 85226

Paul J Ford and Company
250 E. Broad Street Suite 600
Columbus, OH 43215
614.221.6679

Subject: Structural Analysis Report

Carrier Designation:	*Sprint PCS* **Co-Locate**	Scenario B
	Carrier Site Number:	CB03XC053
	Carrier Site Name:	DUBLIN FIRE STATION
Crown Castle Designation:	**Crown Castle BU Number:**	875287
	Crown Castle Site Name:	DUBLIN AVERY PARK
	Crown Castle JDE Job Number:	251396
	Crown Castle Work Order Number:	681183
	Crown Castle Application Number:	205955 Rev. 1
Engineering Firm Designation:	**Paul J Ford and Company Project Number:**	37513-2566
Site Data:	**7673 AVERY RD, DUBLIN, Franklin County, OH** **Latitude *40° 7' 40.77"*, Longitude *-83° 9' 43.4"*** **80 Foot - Monopole Tower**	

Dear Michael Murray,

Paul J Ford and Company is pleased to submit this **"Structural Analysis Report"** to determine the structural integrity of the above mentioned tower. This analysis has been performed in accordance with the Crown Castle Structural 'Statement of Work' and the terms of Crown Castle Purchase Order Number 597977, in accordance with application 205955, revision 1.

The purpose of the analysis is to determine acceptability of the tower stress level. Based on our analysis we have determined the tower stress level for the structure and foundation, under the following load case, to be:

LC5: Existing + Proposed Equipment **Sufficient Capacity**
Note: See Table I and Table II for the proposed and existing loading, respectively.

The structural analysis was performed for this tower in accordance with the requirements of TIA-222-G Structural Standards for Steel Antenna Towers and Antenna Supporting Structures using a 3-second gust wind speed of 90 mph with no ice, 40 mph with 0.75 inch ice thickness and 60 mph under service loads, exposure category C with topographic category 1 and crest height of 0 feet.

We at *Paul J Ford and Company* appreciate the opportunity of providing our continuing professional services to you and Crown Castle. If you have any questions or need further assistance on this or any other projects please give us a call.

Respectfully submitted by:

Lohengri Gimeno
Project Engineer

STATE OF OHIO
DAVID W. HAYNIE
E-52793
REGISTERED PROFESSIONAL ENGINEER

tnxTower Report - version 6.1.3.1

PAUL J. FORD AND COMPANY
STRUCTURAL ENGINEERS
250 East Broad Street • Suite 600 • Columbus, Ohio 43215-3708

Date: **November 27, 2013**

Michael Murray
Crown Castle
5350 North 48th Street, Suite 305
Chandler, AZ 85226

Paul J Ford and Company
250 E. Broad Street Suite 600
Columbus, OH 43215
614.221.6679

Subject: Structural Analysis Report

Carrier Designation:	***Sprint PCS* Co-Locate**	Scenario B
	Carrier Site Number:	CB03XC053
	Carrier Site Name:	DUBLIN FIRE STATION
Crown Castle Designation:	**Crown Castle BU Number:**	875287
	Crown Castle Site Name:	DUBLIN AVERY PARK
	Crown Castle JDE Job Number:	251396
	Crown Castle Work Order Number:	681183
	Crown Castle Application Number:	205955 Rev. 1
Engineering Firm Designation:	**Paul J Ford and Company Project Number:**	37513-2566
Site Data:	**7673 AVERY RD, DUBLIN, Franklin County, OH** **Latitude *40° 7' 40.77"*, Longitude *-83° 9' 43.4"*** **80 Foot - Monopole Tower**	

Dear Michael Murray,

Paul J Ford and Company is pleased to submit this **"Structural Analysis Report"** to determine the structural integrity of the above mentioned tower. This analysis has been performed in accordance with the Crown Castle Structural 'Statement of Work' and the terms of Crown Castle Purchase Order Number 597977, in accordance with application 205955, revision 1.

The purpose of the analysis is to determine acceptability of the tower stress level. Based on our analysis we have determined the tower stress level for the structure and foundation, under the following load case, to be:

LC5: Existing + Proposed Equipment **Sufficient Capacity**
Note: See Table I and Table II for the proposed and existing loading, respectively.

The structural analysis was performed for this tower in accordance with the requirements of TIA-222-G Structural Standards for Steel Antenna Towers and Antenna Supporting Structures using a 3-second gust wind speed of 90 mph with no ice, 40 mph with 0.75 inch ice thickness and 60 mph under service loads, exposure category C with topographic category 1 and crest height of 0 feet.

We at *Paul J Ford and Company* appreciate the opportunity of providing our continuing professional services to you and Crown Castle. If you have any questions or need further assistance on this or any other projects please give us a call.

Respectfully submitted by:

Lohengri Gimeno
Project Engineer

tnxTower Report - version 6.1.3.1

TABLE OF CONTENTS

1) INTRODUCTION

2) ANALYSIS CRITERIA
Table 1 - Proposed Antenna and Cable Information
Table 2 - Existing Antenna and Cable Information
Table 3 - Design Antenna and Cable Information

3) ANALYSIS PROCEDURE
Table 4 - Documents Provided
3.1) Analysis Method
3.2) Assumptions

4) ANALYSIS RESULTS
Table 5 - Section Capacity (Summary)
Table 6 – Tower Components vs. Capacity

5) APPENDIX A
tnxTower Output

6) APPENDIX B
Base Level Drawing

7) APPENDIX C
Additional Calculations

1) INTRODUCTION

This tower is a 80 ft Monopole tower designed by VALMONT in August of 1996. The tower was originally designed for a wind speed of 82.3 mph per TIA/EIA-222-E.

2) ANALYSIS CRITERIA

The structural analysis was performed for this tower in accordance with the requirements of TIA-222-G Structural Standards for Steel Antenna Towers and Antenna Supporting Structures using a 3-second gust wind speed of 90 mph with no ice, 40 mph with 0.75 inch ice thickness and 60 mph under service loads, exposure category C with topographic category 1 and crest height of 0 feet.

Table 1 - Proposed Antenna and Cable Information

Mounting Level (ft)	Center Line Elevation (ft)	Number of Antennas	Antenna Manufacturer	Antenna Model	Number of Feed Lines	Feed Line Size (in)	Note
77.0	80.0	1	commscope	SBCHH-1D90B w/ Mount Pipe	3	1-5/8	-
		2	kmw communications	ET-X-TS-70-15-62-18-iR-RD w/ Mount Pipe			
		3	kmw communications	ET-X-WM-18-65-8P w/ Mount Pipe			
		3	samsung telecommunications	2.5GHz RRH-V3			
		3	samsung telecommunications	OPTIC FIBER JUNCTION CYLINDER			
		3	samsung telecommunications	POWER JUNCTION CYLINDER			
		3	samsung telecommunications	RRH-C2A w/EXT FILTER			
		3	samsung telecommunications	RRH-P4			

Table 2 - Existing Antenna and Cable Information

Mounting Level (ft)	Center Line Elevation (ft)	Number of Antennas	Antenna Manufacturer	Antenna Model	Number of Feed Lines	Feed Line Size (in)	Note
77.0	80.0	1	ems wireless	FR65-17-02DP w/ Mount Pipe	6	7/8	2
		2	ems wireless	FR90-16-02DP w/ Mount Pipe			
	77.0	1	tower mounts	Side Arm Mount [SO 701-3]	-	-	1
55.0	55.0	5	North Star Lighting	STARBEAM-6	1	5/8	1
		1	tower mounts	PM 601-1			

Notes:
1) Existing Equipment
2) Equipment to be removed.

Table 3 - Design Antenna and Cable Information

Mounting Level (ft)	Center Line Elevation (ft)	Number of Antennas	Antenna Manufacturer	Antenna Model	Number of Feed Lines	Feed Line Size (in)
-	-	-	-	-	-	-

3) ANALYSIS PROCEDURE

Table 4 - Documents Provided

Document	Remarks	Reference	Source
4-GEOTECHNICAL REPORTS	FDH, 05-0831E, 08/22/2005	1607247	CCISITES
4-TOWER FOUNDATION DRAWINGS/DESIGN/SPECS	G2, 97802, 10/21/1997	1432884	CCISITES
4-TOWER MANUFACTURER DRAWINGS	Valmont, 13592-96,08/01/1996	1518359	CCISITES

3.1) Analysis Method

tnxTower (version 6.1.3.1), a commercially available analysis software package, was used to create a three-dimensional model of the tower and calculate member stresses for various loading cases. Selected output from the analysis is included in Appendix A.

3.2) Assumptions

1) Tower and structures were built in accordance with the manufacturer's specifications.
2) The tower and structures have been maintained in accordance with the manufacturer's specification.
3) The configuration of antennas, transmission cables, mounts and other appurtenances are as specified in Tables 1 and 2 and the referenced drawings.

This analysis may be affected if any assumptions are not valid or have been made in error. Paul J Ford and Company should be notified to determine the effect on the structural integrity of the tower.

4) ANALYSIS RESULTS

Table 5 - Section Capacity (Summary)

Section No.	Elevation (ft)	Component Type	Size	Critical Element	P (K)	SF*P_allow (K)	% Capacity	Pass / Fail
L1	80 - 55.8333	Pole	TP26.5x21.3x0.2188	1	-2.72	1181.60	13.2	Pass
L2	55.8333 - 27.0833	Pole	TP32.23x25.1659x0.2813	2	-6.61	1894.53	24.7	Pass
L3	27.0833 - 0	Pole	TP37.5x30.6124x0.344	3	-12.43	2806.77	30.3	Pass
							Summary	
						Pole (L3)	30.3	Pass
						Rating =	30.3	Pass

Table 6 - Tower Component Stresses vs. Capacity – LC5

Notes	Component	Elevation (ft)	% Capacity	Pass / Fail
1	Anchor Rods	0	22.6	Pass
1	Base Plate	0	17.8	Pass
1	Base Foundation Steel	0	16.2	Pass
1,2	Base Foundation Soil Interaction	0	28.5	Pass

Structure Rating (max from all components) =	**30.3%**

Notes:

1) See additional documentation in "Appendix C – Additional Calculations" for calculations supporting the % capacity consumed.

2) According to the procedures prescribed and agreed to by the Crown Castle Engineering Foundation Committee, held in January 2010, the existing caisson foundation was analyzed using the methodology in the software 'PLS-Caisson' (Version 8.10, or newer, by Power Line Systems, Inc.). Per the methods in PLS-Caisson, the soil reactions of cohesive soils are calculated using 8CD independent of the depth of the soil layer. The depth of soil to be ignored at the top of the caisson is the greater of the geotechnical report's recommendation, the frost depth of the site or half of the caisson diameter.

APPENDIX A

TNXTOWER OUTPUT

Tower Input Data

There is a pole section.
This tower is designed using the TIA-222-G standard.
The following design criteria apply:

1) Tower is located in Franklin County, Ohio.
2) Basic wind speed of 90 mph.
3) Structure Class II.
4) Exposure Category C.
5) Topographic Category 1.
6) Crest Height 0.00 ft.
7) Nominal ice thickness of 0.7500 in.
8) Ice thickness is considered to increase with height.
9) Ice density of 56 pcf.
10) A wind speed of 40 mph is used in combination with ice.
11) Temperature drop of 50 °F.
12) Deflections calculated using a wind speed of 60 mph.
13) A non-linear (P-delta) analysis was used.
14) Pressures are calculated at each section.
15) Stress ratio used in pole design is 1.
16) Local bending stresses due to climbing loads, feed line supports, and appurtenance mounts are not considered.

Options

Consider Moments - Legs	Distribute Leg Loads As Uniform	Treat Feedline Bundles As Cylinder
Consider Moments - Horizontals	Assume Legs Pinned	Use ASCE 10 X-Brace Ly Rules
Consider Moments - Diagonals	√ Assume Rigid Index Plate	Calculate Redundant Bracing Forces
Use Moment Magnification	√ Use Clear Spans For Wind Area	Ignore Redundant Members in FEA
√ Use Code Stress Ratios	Use Clear Spans For KL/r	SR Leg Bolts Resist Compression
√ Use Code Safety Factors - Guys	Retension Guys To Initial Tension	All Leg Panels Have Same Allowable
Escalate Ice	√ Bypass Mast Stability Checks	Offset Girt At Foundation
Always Use Max Kz	√ Use Azimuth Dish Coefficients	√ Consider Feedline Torque
Use Special Wind Profile	√ Project Wind Area of Appurt.	Include Angle Block Shear Check
Include Bolts In Member Capacity	√ Autocalc Torque Arm Areas	Poles
Leg Bolts Are At Top Of Section	SR Members Have Cut Ends	√ Include Shear-Torsion Interaction
Secondary Horizontal Braces Leg	Sort Capacity Reports By Component	Always Use Sub-Critical Flow
Use Diamond Inner Bracing (4 Sided)	Triangulate Diamond Inner Bracing	Use Top Mounted Sockets
Add IBC .6D+W Combination	Use TIA-222-G Tension Splice Capacity Exemption	

Tapered Pole Section Geometry

Section	*Elevation* *ft*	*Section Length* *ft*	*Splice Length* *ft*	*Number of Sides*	*Top Diameter* *in*	*Bottom Diameter* *in*	*Wall Thickness* *in*	*Bend Radius* *in*	*Pole Grade*
L1	80.00-55.83	24.17	4.17	12	21.3000	26.5000	0.2188	0.8750	A572-65 (65 ksi)
L2	55.83-27.08	32.92	4.92	12	25.1659	32.2300	0.2813	1.1250	A572-65 (65 ksi)
L3	27.08-0.00	32.00		12	30.6124	37.5000	0.3440	1.3760	A572-65 (65 ksi)

Tapered Pole Properties

Section	Tip Dia. in	Area in^2	I in^4	r in	C in	I/C in^3	J in^4	It/Q in^2	w in	w/t
L1	22.0514	14.8491	842.3236	7.5471	11.0334	76.3431	1706.7759	7.3083	5.1222	23.416
	27.4348	18.5119	1632.0292	9.4087	13.7270	118.8919	3306.9337	9.1110	6.5157	29.786
L2	26.9794	22.5362	1781.2771	8.9087	13.0360	136.6433	3609.3503	11.0916	5.9907	21.3
	33.3670	28.9336	3769.6061	11.4377	16.6951	225.7906	7638.2439	14.2402	7.8839	28.032
L3	32.7878	33.5277	3920.7312	10.8361	15.8572	247.2524	7944.4643	16.5013	7.2822	21.169
	38.8229	41.1570	7252.4898	13.3018	19.4250	373.3585	14695.5106	20.2562	9.1281	26.535

Tower Elevation ft	Gusset Area (per face) ft^2	Gusset Thickness in	Gusset Grade	Adjust. Factor A_f	Adjust. Factor A_r	Weight Mult.	Double Angle Stitch Bolt Spacing Diagonals in	Double Angle Stitch Bolt Spacing Horizontals in
L1 80.00-55.83				1	1	1		
L2 55.83-27.08				1	1	1		
L3 27.08-0.00				1	1	1		

Feed Line/Linear Appurtenances - Entered As Area

Description	Face or Leg	Allow Shield	Component Type	Placement ft	Total Number		C_AA_A ft^2/ft	Weight plf
TYPE 7(1 5/8")	C	No	CaAa (Out Of Face)	77.00 - 0.00	2	No Ice	0.00	2.20
						1/2" Ice	0.00	3.54
						1" Ice	0.00	5.49
TYPE 7(1 5/8")	C	No	CaAa (Out Of Face)	77.00 - 0.00	1	No Ice	0.17	2.20
						1/2" Ice	0.27	3.54
						1" Ice	0.37	5.49
***								
AMR-S304(5/8")	C	No	Inside Pole	60.00 - 0.00	1	No Ice	0.00	0.24
						1/2" Ice	0.00	0.24
						1" Ice	0.00	0.24

Feed Line/Linear Appurtenances Section Areas

Tower Section	Tower Elevation ft	Face	A_R ft^2	A_F ft^2	C_AA_A In Face ft^2	C_AA_A Out Face ft^2	Weight K
L1	80.00-55.83	A	0.000	0.000	0.000	0.000	0.00
		B	0.000	0.000	0.000	0.000	0.00
		C	0.000	0.000	0.000	3.577	0.14
L2	55.83-27.08	A	0.000	0.000	0.000	0.000	0.00
		B	0.000	0.000	0.000	0.000	0.00
		C	0.000	0.000	0.000	4.859	0.20
L3	27.08-0.00	A	0.000	0.000	0.000	0.000	0.00
		B	0.000	0.000	0.000	0.000	0.00
		C	0.000	0.000	0.000	4.577	0.19

Feed Line/Linear Appurtenances Section Areas - With Ice

Tower Section	Tower Elevation ft	Face or Leg	Ice Thickness in	A_R ft^2	A_F ft^2	C_AA_A In Face ft^2	C_AA_A Out Face ft^2	Weight K
L1	80.00-55.83	A	1.611	0.000	0.000	0.000	0.000	0.00
		B		0.000	0.000	0.000	0.000	0.00

Tower Section	Tower Elevation ft	Face or Leg	Ice Thickness in	A_R ft^2	A_F ft^2	C_AA_A In Face ft^2	C_AA_A Out Face ft^2	Weight K
		C		0.000	0.000	0.000	10.398	0.57
L2	55.83-27.08	A	1.533	0.000	0.000	0.000	0.000	0.00
		B		0.000	0.000	0.000	0.000	0.00
		C		0.000	0.000	0.000	14.123	0.78
L3	27.08-0.00	A	1.368	0.000	0.000	0.000	0.000	0.00
		B		0.000	0.000	0.000	0.000	0.00
		C		0.000	0.000	0.000	12.879	0.70

Feed Line Center of Pressure

Section	Elevation ft	CP_X in	CP_Z in	CP_X Ice in	CP_Z Ice in
L1	80.00-55.83	-0.1756	0.1014	-0.4087	0.2359
L2	55.83-27.08	-0.1987	0.1147	-0.4734	0.2733
L3	27.08-0.00	-0.2007	0.1159	-0.4793	0.2767

Shielding Factor Ka

Tower Section	Feed Line Record No.	Description	Feed Line Segment Elev.	K_a No Ice	K_a Ice

Discrete Tower Loads

Description	Face or Leg	Offset Type	Offsets: Horz Lateral Vert ft ft ft	Azimuth Adjustment °	Placement ft		C_AA_A Front ft^2	C_AA_A Side ft^2	Weight K
Side Arm Mount [SO 701-3]	C	None		0.000	77.00	No Ice	2.83	2.83	0.20
						1/2" Ice	3.92	3.92	0.24
						1" Ice	5.01	5.01	0.28
****2.5 Sprint***									
ET-X-WM-18-65-8P w/ Mount Pipe	A	From Face	4.00 0.00 3.00	0.000	77.00	No Ice	7.35	4.43	0.06
						1/2" Ice	7.92	5.32	0.11
						1" Ice	8.46	6.08	0.17
ET-X-WM-18-65-8P w/ Mount Pipe	B	From Face	4.00 0.00 3.00	0.000	77.00	No Ice	7.35	4.43	0.06
						1/2" Ice	7.92	5.32	0.11
						1" Ice	8.46	6.08	0.17
ET-X-WM-18-65-8P w/ Mount Pipe	C	From Face	4.00 0.00 3.00	0.000	77.00	No Ice	7.35	4.43	0.06
						1/2" Ice	7.92	5.32	0.11
						1" Ice	8.46	6.08	0.17
2.5GHz RRH-V3	A	From Face	4.00 0.00 3.00	0.000	77.00	No Ice	2.80	1.42	0.06
						1/2" Ice	3.03	1.59	0.08
						1" Ice	3.26	1.76	0.10
2.5GHz RRH-V3	B	From Face	4.00 0.00 3.00	0.000	77.00	No Ice	2.80	1.42	0.06
						1/2" Ice	3.03	1.59	0.08
						1" Ice	3.26	1.76	0.10
2.5GHz RRH-V3	C	From Face	4.00	0.000	77.00	No Ice	2.80	1.42	0.06

Description	Face or Leg	Offset Type	Offsets: Horz Lateral Vert ft ft ft	Azimuth Adjustment °	Placement ft		C_AA_A Front ft^2	C_AA_A Side ft^2	Weight K
			0.00			1/2"	3.03	1.59	0.08
			3.00			Ice	3.26	1.76	0.10
						1" Ice			
POWER JUNCTION	A	From Face	4.00	0.000	77.00	No Ice	0.43	0.43	0.00
CYLINDER			0.00			1/2"	0.53	0.53	0.01
			3.00			Ice	0.64	0.64	0.01
						1" Ice			
POWER JUNCTION	B	From Face	4.00	0.000	77.00	No Ice	0.43	0.43	0.00
CYLINDER			0.00			1/2"	0.53	0.53	0.01
			3.00			Ice	0.64	0.64	0.01
						1" Ice			
POWER JUNCTION	C	From Face	4.00	0.000	77.00	No Ice	0.43	0.43	0.00
CYLINDER			0.00			1/2"	0.53	0.53	0.01
			3.00			Ice	0.64	0.64	0.01
						1" Ice			
OPTIC FIBER JUNCTION	A	From Face	4.00	0.000	77.00	No Ice	0.45	0.45	0.00
CYLINDER			0.00			1/2"	0.55	0.55	0.01
			3.00			Ice	0.67	0.67	0.01
						1" Ice			
OPTIC FIBER JUNCTION	B	From Face	4.00	0.000	77.00	No Ice	0.45	0.45	0.00
CYLINDER			0.00			1/2"	0.55	0.55	0.01
			3.00			Ice	0.67	0.67	0.01
						1" Ice			
OPTIC FIBER JUNCTION	C	From Face	4.00	0.000	77.00	No Ice	0.45	0.45	0.00
CYLINDER			0.00			1/2"	0.55	0.55	0.01
			3.00			Ice	0.67	0.67	0.01
						1" Ice			
***									
ET-X-TS-70-15-62-18-iR-RD w/ Mount Pipe	A	From Face	4.00	0.000	77.00	No Ice	8.70	6.49	0.07
			0.00			1/2"	9.37	7.69	0.13
			3.00			Ice	10.00	8.62	0.21
						1" Ice			
ET-X-TS-70-15-62-18-iR-RD w/ Mount Pipe	B	From Face	4.00	0.000	77.00	No Ice	8.70	6.49	0.07
			0.00			1/2"	9.37	7.69	0.13
			3.00			Ice	10.00	8.62	0.21
						1" Ice			
SBCHH-1D90B w/ Mount Pipe	C	From Face	4.00	0.000	77.00	No Ice	8.62	7.08	0.08
			0.00			1/2"	9.27	8.28	0.15
			3.00			Ice	9.90	9.19	0.22
						1" Ice			
RRH-C2A w/EXT FILTER	A	From Face	4.00	0.000	77.00	No Ice	3.09	5.54	0.05
			0.00			1/2"	3.35	5.86	0.09
			3.00			Ice	3.61	6.19	0.13
						1" Ice			
RRH-C2A w/EXT FILTER	B	From Face	4.00	0.000	77.00	No Ice	3.09	5.54	0.05
			0.00			1/2"	3.35	5.86	0.09
			3.00			Ice	3.61	6.19	0.13
						1" Ice			
RRH-C2A w/EXT FILTER	C	From Face	4.00	0.000	77.00	No Ice	3.09	5.54	0.05
			0.00			1/2"	3.35	5.86	0.09
			3.00			Ice	3.61	6.19	0.13
						1" Ice			
RRH-P4	A	From Face	4.00	0.000	77.00	No Ice	3.19	2.07	0.06
			0.00			1/2"	3.44	2.29	0.08
			3.00			Ice	3.70	2.52	0.11
						1" Ice			
RRH-P4	B	From Face	4.00	0.000	77.00	No Ice	3.19	2.07	0.06
			0.00			1/2"	3.44	2.29	0.08
			3.00			Ice	3.70	2.52	0.11
						1" Ice			
RRH-P4	C	From Face	4.00	0.000	77.00	No Ice	3.19	2.07	0.06
			0.00			1/2"	3.44	2.29	0.08
			3.00			Ice	3.70	2.52	0.11
						1" Ice			
**									

Description	Face or Leg	Offset Type	Offsets: Horz Lateral Vert ft ft ft	Azimuth Adjustment °	Placement ft		C_AA_A Front ft^2	C_AA_A Side ft^2	Weight K
(5) LIGHT-6.86/EPA	C	None		0.000	55.00	No Ice	6.86	7.33	0.06
						1/2" Ice	8.00	9.00	0.08
						1" Ice	9.14	10.67	0.10
Light Mounts	C	None		0.000	55.00	No Ice	5.00	5.00	0.10
						1/2" Ice	7.00	7.00	0.25
						1" Ice	9.00	9.00	0.41

Tower Pressures - No Ice

G_H = 1.100

Section Elevation ft	z ft	K_Z	q_z psf	A_G ft^2	Face	A_F ft^2	A_R ft^2	A_{leg} ft^2	Leg %	C_AA_A In Face ft^2	C_AA_A Out Face ft^2
L1 80.00-55.83	67.48	1.165	23	49.830	A	0.000	49.830	49.830	100.00	0.000	0.000
					B	0.000	49.830		100.00	0.000	0.000
					C	0.000	49.830		100.00	0.000	3.577
L2 55.83-27.08	40.95	1.049	21	72.290	A	0.000	72.290	72.290	100.00	0.000	0.000
					B	0.000	72.290		100.00	0.000	0.000
					C	0.000	72.290		100.00	0.000	4.859
L3 27.08-0.00	13.16	0.85	17	80.811	A	0.000	80.811	80.811	100.00	0.000	0.000
					B	0.000	80.811		100.00	0.000	0.000
					C	0.000	80.811		100.00	0.000	4.577

Tower Pressure - With Ice

G_H = 1.100

Section Elevation ft	z ft	K_Z	q_z psf	t_Z in	A_G ft^2	Face	A_F ft^2	A_R ft^2	A_{leg} ft^2	Leg %	C_AA_A In Face ft^2	C_AA_A Out Face ft^2
L1 80.00-55.83	67.48	1.165	5	1.6112	56.320	A	0.000	56.320	56.320	100.00	0.000	0.000
						B	0.000	56.320		100.00	0.000	0.000
						C	0.000	56.320		100.00	0.000	10.398
L2 55.83-27.08	40.95	1.049	4	1.5327	80.010	A	0.000	80.010	80.010	100.00	0.000	0.000
						B	0.000	80.010		100.00	0.000	0.000
						C	0.000	80.010		100.00	0.000	14.123
L3 27.08-0.00	13.16	0.85	3	1.3683	87.729	A	0.000	87.729	87.729	100.00	0.000	0.000
						B	0.000	87.729		100.00	0.000	0.000
						C	0.000	87.729		100.00	0.000	12.879

Tower Pressure - Service

G_H = 1.100

Section Elevation ft	z ft	K_Z	q_z psf	A_G ft^2	Face	A_F ft^2	A_R ft^2	A_{leg} ft^2	Leg %	C_AA_A In Face ft^2	C_AA_A Out Face ft^2
L1 80.00-55.83	67.48	1.165	9	49.830	A	0.000	49.830	49.830	100.00	0.000	0.000
					B	0.000	49.830		100.00	0.000	0.000
					C	0.000	49.830		100.00	0.000	3.577
L2 55.83-27.08	40.95	1.049	8	72.290	A	0.000	72.290	72.290	100.00	0.000	0.000
					B	0.000	72.290		100.00	0.000	0.000
					C	0.000	72.290		100.00	0.000	4.859
L3 27.08-0.00	13.16	0.85	7	80.811	A	0.000	80.811	80.811	100.00	0.000	0.000
					B	0.000	80.811		100.00	0.000	0.000
					C	0.000	80.811		100.00	0.000	4.577

Load Combinations

Comb. No.	Description
1	Dead Only
2	1.2 Dead+1.6 Wind 0 deg - No Ice
3	0.9 Dead+1.6 Wind 0 deg - No Ice
4	1.2 Dead+1.6 Wind 30 deg - No Ice
5	0.9 Dead+1.6 Wind 30 deg - No Ice
6	1.2 Dead+1.6 Wind 60 deg - No Ice
7	0.9 Dead+1.6 Wind 60 deg - No Ice
8	1.2 Dead+1.6 Wind 90 deg - No Ice
9	0.9 Dead+1.6 Wind 90 deg - No Ice
10	1.2 Dead+1.6 Wind 120 deg - No Ice
11	0.9 Dead+1.6 Wind 120 deg - No Ice
12	1.2 Dead+1.6 Wind 150 deg - No Ice
13	0.9 Dead+1.6 Wind 150 deg - No Ice
14	1.2 Dead+1.6 Wind 180 deg - No Ice
15	0.9 Dead+1.6 Wind 180 deg - No Ice
16	1.2 Dead+1.6 Wind 210 deg - No Ice
17	0.9 Dead+1.6 Wind 210 deg - No Ice
18	1.2 Dead+1.6 Wind 240 deg - No Ice
19	0.9 Dead+1.6 Wind 240 deg - No Ice
20	1.2 Dead+1.6 Wind 270 deg - No Ice
21	0.9 Dead+1.6 Wind 270 deg - No Ice
22	1.2 Dead+1.6 Wind 300 deg - No Ice
23	0.9 Dead+1.6 Wind 300 deg - No Ice
24	1.2 Dead+1.6 Wind 330 deg - No Ice
25	0.9 Dead+1.6 Wind 330 deg - No Ice
26	1.2 Dead+1.0 Ice+1.0 Temp
27	1.2 Dead+1.0 Wind 0 deg+1.0 Ice+1.0 Temp
28	1.2 Dead+1.0 Wind 30 deg+1.0 Ice+1.0 Temp
29	1.2 Dead+1.0 Wind 60 deg+1.0 Ice+1.0 Temp
30	1.2 Dead+1.0 Wind 90 deg+1.0 Ice+1.0 Temp
31	1.2 Dead+1.0 Wind 120 deg+1.0 Ice+1.0 Temp
32	1.2 Dead+1.0 Wind 150 deg+1.0 Ice+1.0 Temp
33	1.2 Dead+1.0 Wind 180 deg+1.0 Ice+1.0 Temp
34	1.2 Dead+1.0 Wind 210 deg+1.0 Ice+1.0 Temp
35	1.2 Dead+1.0 Wind 240 deg+1.0 Ice+1.0 Temp
36	1.2 Dead+1.0 Wind 270 deg+1.0 Ice+1.0 Temp
37	1.2 Dead+1.0 Wind 300 deg+1.0 Ice+1.0 Temp
38	1.2 Dead+1.0 Wind 330 deg+1.0 Ice+1.0 Temp
39	Dead+Wind 0 deg - Service
40	Dead+Wind 30 deg - Service
41	Dead+Wind 60 deg - Service
42	Dead+Wind 90 deg - Service
43	Dead+Wind 120 deg - Service
44	Dead+Wind 150 deg - Service
45	Dead+Wind 180 deg - Service
46	Dead+Wind 210 deg - Service
47	Dead+Wind 240 deg - Service
48	Dead+Wind 270 deg - Service
49	Dead+Wind 300 deg - Service
50	Dead+Wind 330 deg - Service

Maximum Member Forces

Section No.	Elevation ft	Component Type	Condition	Gov. Load Comb.	Axial K	Major Axis Moment kip-ft	Minor Axis Moment kip-ft
L1	80 - 55.8333	Pole	Max Tension	8	0.00	0	0
			Max. Compression	26	-6.77	0	0
			Max. Mx	20	-2.72	79	0
			Max. My	14	-2.72	0	-78
			Max. Vy	20	-4.87	79	0
			Max. Vx	14	4.84	0	-78
			Max. Torque	22			0
L2	55.8333 - 27.0833	Pole	Max Tension	1	0.00	0	0
			Max. Compression	26	-13.88	1	-1
			Max. Mx	20	-6.61	290	0
			Max. My	14	-6.61	0	-289
			Max. Vy	20	-9.20	290	0
			Max. Vx	14	9.17	0	-289
			Max. Torque	22			0
L3	27.0833 - 0	Pole	Max Tension	1	0.00	0	0
			Max. Compression	26	-22.47	2	-1
			Max. Mx	20	-12.43	632	0
			Max. My	14	-12.43	1	-630
			Max. Vy	20	-12.15	632	0
			Max. Vx	14	12.13	1	-630
			Max. Torque	24			1

Maximum Reactions

Location	Condition	Gov. Load Comb.	Vertical K	Horizontal, X K	Horizontal, Z K
Pole	Max. Vert	26	22.47	-0.00	0.00
	Max. H_x	21	9.33	12.15	-0.00
	Max. H_z	3	9.33	0.00	12.12
	Max. M_x	2	629	0.00	12.12
	Max. M_z	8	631	-12.15	-0.00
	Max. Torsion	24	1	6.08	10.50
	Min. Vert	21	9.33	12.15	-0.00
	Min. H_x	9	9.33	-12.15	-0.00
	Min. H_z	15	9.33	0.00	-12.12
	Min. M_x	14	-630	0.00	-12.12
	Min. M_z	20	-632	12.15	-0.00
	Min. Torsion	12	-1	-6.08	-10.50

Tower Mast Reaction Summary

Load Combination	Vertical K	$Shear_x$ K	$Shear_z$ K	Overturning Moment, M_x kip-ft	Overturning Moment, M_z kip-ft	Torque kip-ft
Dead Only	10.36	-0.00	0.00	0	1	0
1.2 Dead+1.6 Wind 0 deg - No Ice	12.44	-0.00	-12.12	-629	1	0
0.9 Dead+1.6 Wind 0 deg - No Ice	9.33	-0.00	-12.12	-628	0	0
1.2 Dead+1.6 Wind 30 deg - No Ice	12.44	6.08	-10.50	-545	-315	0
0.9 Dead+1.6 Wind 30 deg - No Ice	9.33	6.08	-10.50	-544	-315	0
1.2 Dead+1.6 Wind 60 deg - No Ice	12.44	10.52	-6.06	-314	-546	0

Load Combination	Vertical K	$Shear_x$ K	$Shear_z$ K	Overturning Moment, M_x kip-ft	Overturning Moment, M_z kip-ft	Torque kip-ft
0.9 Dead+1.6 Wind 60 deg - No Ice	9.33	10.52	-6.06	-314	-546	0
1.2 Dead+1.6 Wind 90 deg - No Ice	12.44	12.15	0.00	0	-631	0
0.9 Dead+1.6 Wind 90 deg - No Ice	9.33	12.15	0.00	0	-630	0
1.2 Dead+1.6 Wind 120 deg - No Ice	12.44	10.52	6.06	315	-546	1
0.9 Dead+1.6 Wind 120 deg - No Ice	9.33	10.52	6.06	314	-546	1
1.2 Dead+1.6 Wind 150 deg - No Ice	12.44	6.08	10.50	546	-315	1
0.9 Dead+1.6 Wind 150 deg - No Ice	9.33	6.08	10.50	544	-315	1
1.2 Dead+1.6 Wind 180 deg - No Ice	12.44	-0.00	12.12	630	1	0
0.9 Dead+1.6 Wind 180 deg - No Ice	9.33	-0.00	12.12	628	0	0
1.2 Dead+1.6 Wind 210 deg - No Ice	12.44	-6.08	10.50	546	317	0
0.9 Dead+1.6 Wind 210 deg - No Ice	9.33	-6.08	10.50	544	316	0
1.2 Dead+1.6 Wind 240 deg - No Ice	12.44	-10.52	6.06	315	548	0
0.9 Dead+1.6 Wind 240 deg - No Ice	9.33	-10.52	6.06	314	547	0
1.2 Dead+1.6 Wind 270 deg - No Ice	12.44	-12.15	0.00	0	632	0
0.9 Dead+1.6 Wind 270 deg - No Ice	9.33	-12.15	0.00	0	631	0
1.2 Dead+1.6 Wind 300 deg - No Ice	12.44	-10.52	-6.06	-314	548	-1
0.9 Dead+1.6 Wind 300 deg - No Ice	9.33	-10.52	-6.06	-314	547	-1
1.2 Dead+1.6 Wind 330 deg - No Ice	12.44	-6.08	-10.50	-545	317	-1
0.9 Dead+1.6 Wind 330 deg - No Ice	9.33	-6.08	-10.50	-544	316	-1
1.2 Dead+1.0 Ice+1.0 Temp	22.47	0.00	-0.00	1	2	0
1.2 Dead+1.0 Wind 0 deg+1.0 Ice+1.0 Temp	22.47	0.00	-2.19	-114	2	0
1.2 Dead+1.0 Wind 30 deg+1.0 Ice+1.0 Temp	22.47	1.10	-1.90	-98	-55	0
1.2 Dead+1.0 Wind 60 deg+1.0 Ice+1.0 Temp	22.47	1.90	-1.09	-56	-98	0
1.2 Dead+1.0 Wind 90 deg+1.0 Ice+1.0 Temp	22.47	2.19	-0.00	1	-113	0
1.2 Dead+1.0 Wind 120 deg+1.0 Ice+1.0 Temp	22.47	1.90	1.09	59	-98	0
1.2 Dead+1.0 Wind 150 deg+1.0 Ice+1.0 Temp	22.47	1.10	1.90	101	-55	0
1.2 Dead+1.0 Wind 180 deg+1.0 Ice+1.0 Temp	22.47	0.00	2.19	117	2	0
1.2 Dead+1.0 Wind 210 deg+1.0 Ice+1.0 Temp	22.47	-1.10	1.90	101	60	0
1.2 Dead+1.0 Wind 240 deg+1.0 Ice+1.0 Temp	22.47	-1.90	1.09	59	102	0
1.2 Dead+1.0 Wind 270 deg+1.0 Ice+1.0 Temp	22.47	-2.19	-0.00	1	118	0
1.2 Dead+1.0 Wind 300 deg+1.0 Ice+1.0 Temp	22.47	-1.90	-1.09	-56	102	0
1.2 Dead+1.0 Wind 330 deg+1.0 Ice+1.0 Temp	22.47	-1.10	-1.90	-98	60	0
Dead+Wind 0 deg - Service	10.36	0.00	-3.01	-156	1	0
Dead+Wind 30 deg - Service	10.36	1.51	-2.61	-135	-78	0
Dead+Wind 60 deg - Service	10.36	2.61	-1.51	-78	-135	0
Dead+Wind 90 deg - Service	10.36	3.02	-0.00	0	-156	0
Dead+Wind 120 deg - Service	10.36	2.61	1.51	78	-135	0

Load Combination	Vertical K	$Shear_x$ K	$Shear_z$ K	Overturning Moment, M_x kip-ft	Overturning Moment, M_z kip-ft	Torque kip-ft
Dead+Wind 150 deg - Service	10.36	1.51	2.61	136	-78	0
Dead+Wind 180 deg - Service	10.36	0.00	3.01	157	1	0
Dead+Wind 210 deg - Service	10.36	-1.51	2.61	136	79	0
Dead+Wind 240 deg - Service	10.36	-2.61	1.51	78	136	0
Dead+Wind 270 deg - Service	10.36	-3.02	-0.00	0	157	0
Dead+Wind 300 deg - Service	10.36	-2.61	-1.51	-78	136	0
Dead+Wind 330 deg - Service	10.36	-1.51	-2.61	-135	79	0

Solution Summary

	Sum of Applied Forces			Sum of Reactions			
Load Comb.	PX K	PY K	PZ K	PX K	PY K	PZ K	% Error
1	0.00	-10.36	0.00	0.00	10.36	0.00	0.000%
2	0.00	-12.44	-12.12	0.00	12.44	12.12	0.004%
3	0.00	-9.33	-12.12	0.00	9.33	12.12	0.003%
4	6.08	-12.44	-10.50	-6.08	12.44	10.50	0.001%
5	6.08	-9.33	-10.50	-6.08	9.33	10.50	0.001%
6	10.52	-12.44	-6.06	-10.52	12.44	6.06	0.001%
7	10.52	-9.33	-6.06	-10.52	9.33	6.06	0.001%
8	12.15	-12.44	0.00	-12.15	12.44	-0.00	0.004%
9	12.15	-9.33	0.00	-12.15	9.33	-0.00	0.003%
10	10.52	-12.44	6.06	-10.52	12.44	-6.06	0.001%
11	10.52	-9.33	6.06	-10.52	9.33	-6.06	0.001%
12	6.08	-12.44	10.50	-6.08	12.44	-10.50	0.001%
13	6.08	-9.33	10.50	-6.08	9.33	-10.50	0.001%
14	0.00	-12.44	12.12	0.00	12.44	-12.12	0.004%
15	0.00	-9.33	12.12	0.00	9.33	-12.12	0.003%
16	-6.08	-12.44	10.50	6.08	12.44	-10.50	0.001%
17	-6.08	-9.33	10.50	6.08	9.33	-10.50	0.001%
18	-10.52	-12.44	6.06	10.52	12.44	-6.06	0.001%
19	-10.52	-9.33	6.06	10.52	9.33	-6.06	0.001%
20	-12.15	-12.44	0.00	12.15	12.44	-0.00	0.004%
21	-12.15	-9.33	0.00	12.15	9.33	-0.00	0.003%
22	-10.52	-12.44	-6.06	10.52	12.44	6.06	0.001%
23	-10.52	-9.33	-6.06	10.52	9.33	6.06	0.001%
24	-6.08	-12.44	-10.50	6.08	12.44	10.50	0.001%
25	-6.08	-9.33	-10.50	6.08	9.33	10.50	0.001%
26	0.00	-22.47	0.00	-0.00	22.47	0.00	0.000%
27	0.00	-22.47	-2.19	-0.00	22.47	2.19	0.000%
28	1.10	-22.47	-1.90	-1.10	22.47	1.90	0.000%
29	1.90	-22.47	-1.09	-1.90	22.47	1.09	0.000%
30	2.19	-22.47	0.00	-2.19	22.47	0.00	0.000%
31	1.90	-22.47	1.09	-1.90	22.47	-1.09	0.000%
32	1.10	-22.47	1.90	-1.10	22.47	-1.90	0.000%
33	0.00	-22.47	2.19	-0.00	22.47	-2.19	0.000%
34	-1.10	-22.47	1.90	1.10	22.47	-1.90	0.000%
35	-1.90	-22.47	1.09	1.90	22.47	-1.09	0.000%
36	-2.19	-22.47	0.00	2.19	22.47	0.00	0.000%
37	-1.90	-22.47	-1.09	1.90	22.47	1.09	0.000%
38	-1.10	-22.47	-1.90	1.10	22.47	1.90	0.000%
39	0.00	-10.36	-3.01	-0.00	10.36	3.01	0.001%
40	1.51	-10.36	-2.61	-1.51	10.36	2.61	0.005%
41	2.62	-10.36	-1.51	-2.61	10.36	1.51	0.005%
42	3.02	-10.36	0.00	-3.02	10.36	0.00	0.001%
43	2.62	-10.36	1.51	-2.61	10.36	-1.51	0.005%
44	1.51	-10.36	2.61	-1.51	10.36	-2.61	0.005%
45	0.00	-10.36	3.01	-0.00	10.36	-3.01	0.001%
46	-1.51	-10.36	2.61	1.51	10.36	-2.61	0.005%

	Sum of Applied Forces			Sum of Reactions			
Load Comb.	PX K	PY K	PZ K	PX K	PY K	PZ K	% Error
47	-2.62	-10.36	1.51	2.61	10.36	-1.51	0.005%
48	-3.02	-10.36	0.00	3.02	10.36	0.00	0.001%
49	-2.62	-10.36	-1.51	2.61	10.36	1.51	0.005%
50	-1.51	-10.36	-2.61	1.51	10.36	2.61	0.005%

Non-Linear Convergence Results

Load Combination	Converged?	Number of Cycles	Displacement Tolerance	Force Tolerance
1	Yes	6	0.00000001	0.00000001
2	Yes	9	0.00000001	0.00014491
3	Yes	9	0.00000001	0.00012076
4	Yes	10	0.00000001	0.00010163
5	Yes	10	0.00000001	0.00008243
6	Yes	10	0.00000001	0.00010029
7	Yes	10	0.00000001	0.00008130
8	Yes	9	0.00000001	0.00014702
9	Yes	9	0.00000001	0.00012244
10	Yes	10	0.00000001	0.00011994
11	Yes	10	0.00000001	0.00009740
12	Yes	10	0.00000001	0.00009380
13	Yes	10	0.00000001	0.00007593
14	Yes	9	0.00000001	0.00014516
15	Yes	9	0.00000001	0.00012092
16	Yes	10	0.00000001	0.00010791
17	Yes	10	0.00000001	0.00008737
18	Yes	10	0.00000001	0.00011010
19	Yes	10	0.00000001	0.00008915
20	Yes	9	0.00000001	0.00014736
21	Yes	9	0.00000001	0.00012265
22	Yes	10	0.00000001	0.00009368
23	Yes	10	0.00000001	0.00007579
24	Yes	10	0.00000001	0.00011903
25	Yes	10	0.00000001	0.00009664
26	Yes	6	0.00000001	0.00001172
27	Yes	10	0.00000001	0.00006876
28	Yes	10	0.00000001	0.00006904
29	Yes	10	0.00000001	0.00006896
30	Yes	10	0.00000001	0.00006839
31	Yes	10	0.00000001	0.00007019
32	Yes	10	0.00000001	0.00007094
33	Yes	10	0.00000001	0.00007086
34	Yes	10	0.00000001	0.00007271
35	Yes	10	0.00000001	0.00007298
36	Yes	10	0.00000001	0.00007161
37	Yes	10	0.00000001	0.00007185
38	Yes	10	0.00000001	0.00007091
39	Yes	9	0.00000001	0.00005061
40	Yes	8	0.00000001	0.00014607
41	Yes	8	0.00000001	0.00014610
42	Yes	9	0.00000001	0.00005082
43	Yes	8	0.00000001	0.00014677
44	Yes	8	0.00000001	0.00014660
45	Yes	9	0.00000001	0.00005091
46	Yes	8	0.00000001	0.00014702
47	Yes	8	0.00000001	0.00014774
48	Yes	9	0.00000001	0.00005122
49	Yes	8	0.00000001	0.00014707
50	Yes	8	0.00000001	0.00014650

Maximum Tower Deflections - Service Wind

tnxTower Report - version 6.1.3.1

Section No.	Elevation ft	Horz. Deflection in	Gov. Load Comb.	Tilt °	Twist °
L1	80 - 55.8333	3.451	48	0.341	0.000
L2	60 - 27.0833	2.081	48	0.300	0.000
L3	32 - 0	0.634	48	0.174	0.000

Critical Deflections and Radius of Curvature - Service Wind

Elevation ft	Appurtenance	Gov. Load Comb.	Deflection in	Tilt °	Twist °	Radius of Curvature ft
77.00	Side Arm Mount [SO 701-3]	48	3.239	0.336	0.000	76088
55.00	(5) LIGHT-6.86/EPA	48	1.768	0.283	0.000	15461

Maximum Tower Deflections - Design Wind

Section No.	Elevation ft	Horz. Deflection in	Gov. Load Comb.	Tilt °	Twist °
L1	80 - 55.8333	13.866	20	1.369	0.003
L2	60 - 27.0833	8.362	20	1.205	0.002
L3	32 - 0	2.549	20	0.699	0.001

Critical Deflections and Radius of Curvature - Design Wind

Elevation ft	Appurtenance	Gov. Load Comb.	Deflection in	Tilt °	Twist °	Radius of Curvature ft
77.00	Side Arm Mount [SO 701-3]	20	13.016	1.350	0.003	18987
55.00	(5) LIGHT-6.86/EPA	20	7.105	1.137	0.002	3854

Compression Checks

Pole Design Data

Section No.	Elevation ft	Size	L ft	L_u ft	Kl/r	A in^2	P_u K	ϕP_n K	Ratio $\frac{P_u}{\phi P_n}$
L1	80 - 55.8333 (1)	TP26.5x21.3x0.2188	24.17	0.00	0.0	17.8803	-2.72	1181.60	0.002
L2	55.8333 - 27.0833 (2)	TP32.23x25.1659x0.2813	32.92	0.00	0.0	27.9780	-6.61	1894.53	0.003
L3	27.0833 - 0 (3)	TP37.5x30.6124x0.344	32.00	0.00	0.0	41.1570	-12.43	2806.77	0.004

Pole Bending Design Data

Section No.	Elevation ft	Size	M_{ux} kip-ft	ϕM_{nx} kip-ft	Ratio $\frac{M_{ux}}{\phi M_{nx}}$	M_{uy} kip-ft	ϕM_{ny} kip-ft	Ratio $\frac{M_{uy}}{\phi M_{ny}}$
L1	80 - 55.8333 (1)	TP26.5x21.3x0.2188	79	611	0.129	0	611	0.000
L2	55.8333 - 27.0833 (2)	TP32.23x25.1659x0.2813	290	1191	0.244	0	1191	0.000
L3	27.0833 - 0 (3)	TP37.5x30.6124x0.344	632	2122	0.298	0	2122	0.000

Pole Shear Design Data

Section No.	Elevation ft	Size	Actual V_u K	ϕV_n K	Ratio $\frac{V_u}{\phi V_n}$	Actual T_u kip-ft	ϕT_n kip-ft	Ratio $\frac{T_u}{\phi T_n}$
L1	80 - 55.8333 (1)	TP26.5x21.3x0.2188	4.87	590.80	0.008	0	1238	0.000
L2	55.8333 - 27.0833 (2)	TP32.23x25.1659x0.2813	9.20	947.26	0.010	0	2415	0.000
L3	27.0833 - 0 (3)	TP37.5x30.6124x0.344	12.15	1403.39	0.009	0	4302	0.000

Pole Interaction Design Data

Section No.	Elevation ft	Ratio $\frac{P_u}{\phi P_n}$	Ratio $\frac{M_{ux}}{\phi M_{nx}}$	Ratio $\frac{M_{uy}}{\phi M_{ny}}$	Ratio $\frac{V_u}{\phi V_n}$	Ratio $\frac{T_u}{\phi T_n}$	Comb. Stress Ratio	Allow. Stress Ratio	Criteria
L1	80 - 55.8333 (1)	0.002	0.129	0.000	0.008	0.000	0.132 ✔	1.000	4.8.2 ✔
L2	55.8333 - 27.0833 (2)	0.003	0.244	0.000	0.010	0.000	0.247 ✔	1.000	4.8.2 ✔
L3	27.0833 - 0 (3)	0.004	0.298	0.000	0.009	0.000	0.303 ✔	1.000	4.8.2 ✔

Section Capacity Table

Section No.	Elevation ft	Component Type	Size	Critical Element	P K	ϕP_{allow} K	% Capacity	Pass Fail
L1	80 - 55.8333	Pole	TP26.5x21.3x0.2188	1	-2.72	1181.60	13.2	Pass
L2	55.8333 - 27.0833	Pole	TP32.23x25.1659x0.2813	2	-6.61	1894.53	24.7	Pass
L3	27.0833 - 0	Pole	TP37.5x30.6124x0.344	3	-12.43	2806.77	30.3	Pass
							Summary	
						Pole (L3)	30.3	Pass
						RATING =	**30.3**	**Pass**

APPENDIX B

BASE LEVEL DRAWING

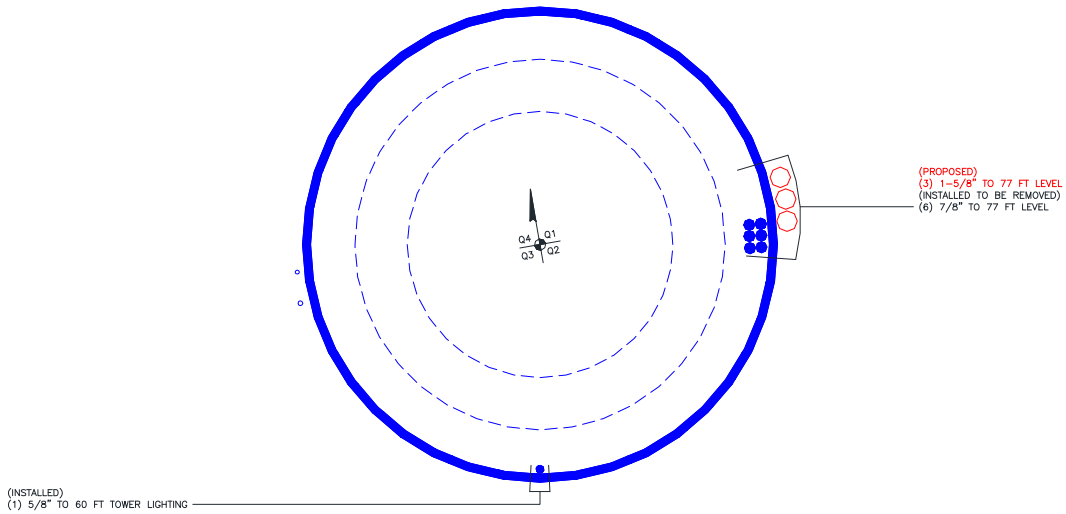

APPENDIX C

ADDITIONAL CALCULATIONS

Section	Length (ft)	Number of Sides	Thickness (in)	Socket Length (ft)	Top Dia (in)	Bot Dia (in)	Grade	Weight (K)
1	24.17	12	0.2188	4.17	21.3000	26.5000	A572-65	1.4
2	32.92	12	0.2813	4.92	25.1659	32.2300		2.9
3	32.00	12	0.3440		30.6124	37.5000		4.1
								8.3

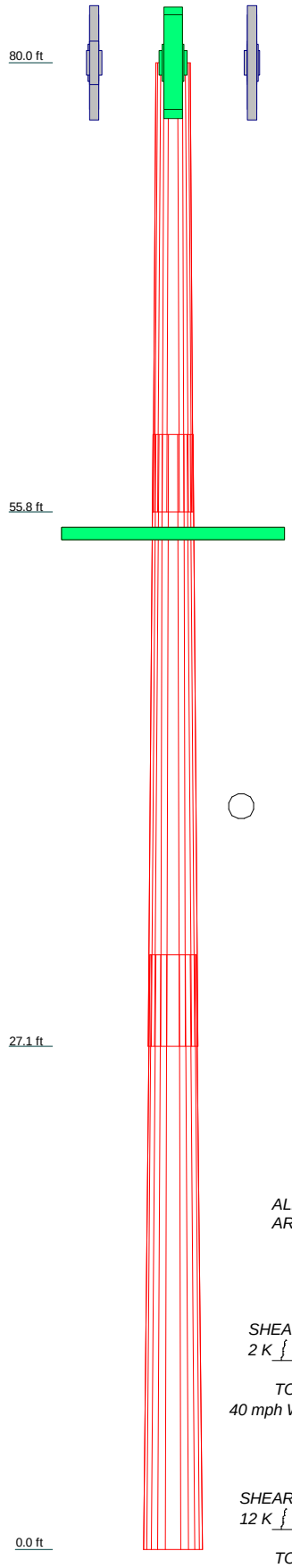

ALL REACTIONS ARE FACTORED

AXIAL 22 K

SHEAR 2 K — *MOMENT 118 kip-ft*

TORQUE 0 kip-ft

40 mph WIND - 0.7500 in ICE

AXIAL 12 K

SHEAR 12 K — *MOMENT 632 kip-ft*

TORQUE 1 kip-ft

REACTIONS - 90 mph WIND

DESIGNED APPURTENANCE LOADING

TYPE	ELEVATION	TYPE	ELEVATION
Side Arm Mount [SO 701-3]	77	ET-X-TS-70-15-62-18-iR-RD w/ Mount Pipe	77
ET-X-WM-18-65-8P w/ Mount Pipe	77	ET-X-TS-70-15-62-18-iR-RD w/ Mount Pipe	77
ET-X-WM-18-65-8P w/ Mount Pipe	77	SBCHH-1D90B w/ Mount Pipe	77
ET-X-WM-18-65-8P w/ Mount Pipe	77	RRH-C2A w/EXT FILTER	77
2.5GHz RRH-V3	77	RRH-C2A w/EXT FILTER	77
2.5GHz RRH-V3	77	RRH-C2A w/EXT FILTER	77
2.5GHz RRH-V3	77	RRH-P4	77
POWER JUNCTION CYLINDER	77	RRH-P4	77
POWER JUNCTION CYLINDER	77	RRH-P4	77
POWER JUNCTION CYLINDER	77	(5) LIGHT-6.86/EPA	55
OPTIC FIBER JUNCTION CYLINDER	77	Light Mounts	55
OPTIC FIBER JUNCTION CYLINDER	77		
OPTIC FIBER JUNCTION CYLINDER	77		

MATERIAL STRENGTH

GRADE	Fy	Fu	GRADE	Fy	Fu
A572-65	65 ksi	80 ksi			

TOWER DESIGN NOTES

1. Tower is located in Franklin County, Ohio.
2. Tower designed for Exposure C to the TIA-222-G Standard.
3. Tower designed for a 90 mph basic wind in accordance with the TIA-222-G Standard.
4. Tower is also designed for a 40 mph basic wind with 0.75 in ice. Ice is considered to increase in thickness with height.
5. Deflections are based upon a 60 mph wind.
6. Tower Structure Class II.
7. Topographic Category 1 with Crest Height of 0.00 ft
8. TOWER RATING: 30.3%

Paul J Ford and Company
250 E. Broad Street Suite 600
Columbus, OH 43215
Phone: 614.221.6679
FAX: 614.448.4105

Job: ***80-Ft Monopole / Dublin Fire Station***			
Project: ***37513-2566 / BU# 875287***			
Client: Crown Castle	Drawn by: Lohengri Gimeno	App'd:	
Code: TIA-222-G	Date: 12/03/13	Scale: NTS	
Path: T:\375_Crown_Castle\2013\37513-2566 BU 875287\37513-2566.eri		Dwg No. E-1	

Stiffened or Unstiffened, Ungrouted, Circular Base Plate - Any Rod Material

TIA Rev G Assumption: Clear space between bottom of leveling nut and top of concrete **not** exceeding (1)*(Rod Diameter)

Site Data	
BU#:	
Site Name:	
App #:	
Pole Manufacturer:	*Other*

Reactions		
Mu:	632	ft-kips
Axial, Pu:	12	kips
Shear, Vu:	12	kips
Eta Factor, η	0.5	TIA G (Fig. 4-4)

Anchor Rod Data		
Qty:	12	
Diam:	2.25	in
Rod Material:	A615-J	
Strength (Fu):	100	ksi
Yield (Fy):	75	ksi
Bolt Circle:	45.32	in

If No stiffeners, Criteria: AISC LRFD <-Only Applcable to Unstiffened Cases

Anchor Rod Results

			Rigid
Max Rod (Cu+ Vu/ń):	58.8	Kips	AISC LRFD
Allowable Axial, Φ*Fu*Anet:	260.0	Kips	φ*Tn
Anchor Rod Stress Ratio:	22.6%	**Pass**	

Plate Data		
Diam:	51.32	in
Thick:	2.375	in
Grade:	60	ksi
Single-Rod B-eff:	10.05	in

Base Plate Results Flexural Check

			Rigid
Base Plate Stress:	9.6	ksi	AISC LRFD
Allowable Plate Stress:	54.0	ksi	φ*Fy
Base Plate Stress Ratio:	17.8%	**Pass**	Y.L. Length:
			25.45

Stiffener Data (Welding at both sides)		
Config:		*
Weld Type:		
Groove Depth:		in **
Groove Angle:		degrees
Fillet H. Weld:		<-- Disregard
Fillet V. Weld:		in
Width:		in
Height:		in
Thick:		in
Notch:		in
Grade:		ksi
Weld str.:		ksi

n/a

Stiffener Results

Horizontal Weld :	n/a
Vertical Weld:	n/a
Plate Flex+Shear, fb/Fb+(fv/Fv)^2:	n/a
Plate Tension+Shear, ft/Ft+(fv/Fv)^2	n/a
Plate Comp. (AISC Bracket):	n/a

Pole Results

Pole Punching Shear Check:	n/a

Pole Data		
Diam:	37.5	in
Thick:	0.344	in
Grade:	65	ksi
# of Sides:	12	"0" IF Round
Fu	80	ksi
Reinf. Fillet Weld	0	"0" if None

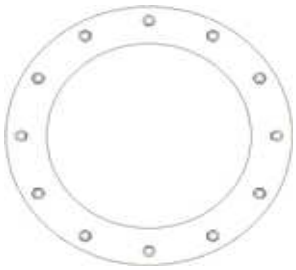

* 0 = none, 1 = every bolt, 2 = every 2 bolts, 3 = 2 per bolt

** Note: for complete joint penetration groove welds the groove depth must be exactly 1/2 the stiffener thickness for calculation purposes

PAUL J. FORD AND COMPANY
STRUCTURAL ENGINEERS
250 East Broad Street • Suite 600 • Columbus, Ohio 43215-3708

Job Number:	37513-2566	**Page:**	1
Site Number:	875287	**By:**	lgr
Site Name:		**Date:**	12/3/2013

DRILLED PIER SOIL AND STEEL ANALYSIS - TIA-222-G

Factored Base Reactions from RISA

	Comp. (+)	Tension (-)	
Moment, Mu =	632.0		k-ft
Shear, Vu =	12.0		kips
Axial Load, Pu1 =	12.0		kips (from 1.2D + 1.6W)*
Axial Load, Pu2 =	9.0	0.0	kips (from 0.9D + 1.6W)**
OTMu =	644.0	0.0	k-ft @ Ground

***Axial Load, Pu1 will be used for Soil Compression Analysis.**
****Axial Load, Pu2 will be used for Steel Analysis.**

Safety Factors / Load Factors / Φ Factors

Tower Type =	Monopole DP
ACI Code =	ACI 318-05
Seismic Design Category =	D
Reference Standard =	TIA-222-G
Use 1.3 Load Factor?	Yes
Load Factor =	1.00

Drilled Pier Parameters

Diameter =	5.5	ft
Height Above Grade =	1	ft
Depth Below Grade =	17	ft
fc' =	4	ksi
εc =	0.003	in/in
Mat Ftdn. Cap Width =		ft
Mat Ftdn. Cap Length =		ft
Depth Below Grade =		ft

	Safety Factor	Φ Factor
Soil Lateral Resistance =	2.00	0.75
Skin Friction =	2.00	0.75
End Bearing =	2.00	0.75
Concrete Wt. Resist Uplift =	1.25	

Load Combinations Checked per TIA-222-G

1. (0.75) Ult. Skin Friction + (0.75) Ult. End Bearing + (1.2) Effective Soil Wt. - (1.2) Buoyant Conc. Wt. ≥ Comp.
2. (0.75) Ult. Skin Friction + (0.9) Buoyant Conc. Wt. ≥ Uplift

Steel Parameters

Number of Bars =	28	
Rebar Size =	#10	
Rebar Fy =	60	ksi
Rebar MOE =	29000	ksi
Tie Size =	#4	
Side Clear Cover to Ties =	3	in

Soil Parameters

Water Table Depth =	15.00	ft
Depth to Ignore Soil =	3.00	ft
Depth to Full Cohesion =	0	ft
Full Cohesion Starts at?	Ground	

Above Full Cohesion Lateral Resistance = 4(Cohesion)(Dia)(H)
Below Full Cohesion Lateral Resistance = 8(Cohesion)(Dia)(H)

Direct Embed Pole Shaft Parameters

Dia @ Grade =		in
Dia @ Depth Below Grade =		in
Number of Sides =		
Thickness =		in
Fy =		ksi
Backfill Condition =		

Maximum Capacity Ratios

Maximum Soil Ratio =	110.0%
Maximum Steel Ratio =	105.0%

Define Soil Layers

Note: Cohesion = Undrained Shear Strengh = Unconfined Compressive Strength / 2

Layer	Thickness ft	Unit Weight pcf	Cohesion psf	Friction Angle degrees	Soil Type	Ultimate End Bearing psf	Comp. Ult. Skin Friction psf	Tension Ult. Skin Friction psf	Depth ft
1	12	115	1300	0	Clay	12000	0	0	12
2	5	120	0	36	Sand	15000	0	0	17
3	21	125	0	43	Sand	15000	0	0	38
4									
5									
6									
7									
8									
9									
10									
11									
12									

Soil Results: Overturning

Depth to COR =	12.38	ft, from Grade
Bending Moment, Mu =	792.52	k-ft, from COR
Resisting Moment, ΦMn =	2778.56	k-ft, from COR

MOMENT RATIO = 28.5% OK

Shear, Vu =	12.00	kips
Resisting Shear, ΦVn =	42.07	kips

SHEAR RATIO = 28.5% OK

Soil Results: Uplift

Uplift, Tu =	0.00	kips
Uplift Capacity, ΦTn =	55.06	kips

UPLIFT RATIO = 0.0% OK

Soil Results: Compression

Compression, Cu =	12.00	kips
Comp. Capacity, ΦCn =	246.75	kips

COMPRESSION RATIO = 4.9% OK

Steel Results (ACI 318-05):

Minimum Steel Area =	11.40	sq in
Actual Steel Area =	35.56	sq in
Axial, ΦPn (min) =	-1920.24	kips, Where ΦMn = 0 k-ft
Axial, ΦPn (max) =	7095.27	kips, Where ΦMn = 0 k-ft

Axial Load, Pu =	24.97	kips @ 3.98 ft Below Grade
Moment, Mu =	685.88	k-ft @ 3.98 ft Below Grade
Moment, ΦMn =	4231.25	k-ft

MOMENT RATIO = 16.2% OK

(c) Copyright 2013 by Paul J. Ford and Company, all rights reserved.

Moment Capacity of Drilled Concrete Shaft (Caisson) for TIA Rev F or G

Note: Shaft assumed to have ties, not spiral, transverse reinforcing

Site Data

BU#:	*875287*
Site Name:	*0*
App #:	

Loads Already Factored		
For M (WL)	1	<----Disregard
For P (DL)	1	<----Disregard

Pier Properties

Concrete:

Pier Diameter =	5.5	ft
Concrete Area =	3421.2	in^2

Reinforcement:

Clear Cover to **Tie**=	3.00	in
Horiz. **Tie** Bar Size=	4	
Vert. Cage Diameter =	4.81	ft
Vert. Cage Diameter =	57.73	in
Vertical Bar Size =	10	
Bar Diameter =	1.27	in
Bar Area =	1.27	in^2
Number of Bars =	28	
As Total=	35.56	in^2
A s/ Aconc, Rho:	0.0104	1.04%

ACI 10.5 , ACI 21.10.4, and IBC 1810.

Min As for Flexural, Tension Controlled, Shafts:

(3)*(Sqrt(f'c)/Fy:	0.0032
200 / Fy:	0.0033

Minimum Rho Check:

Actual Req'd Min. Rho:	0.33%	Flexural
Provided Rho:	1.04%	**OK**

Ref. Shaft Max Axial Capacities, ϕ Max(Pn or Tn):		
Max Pu = (φ=0.65) Pn.		
Pn per ACI 318 (10-2)	7095.27	kips
at Mu=(ϕ=0.65)Mn=	3360.03	ft-kips
Max Tu, (φ=0.9) Tn =	1920.24	kips
at Mu=ϕ=(0.90)Mn=	0.00	ft-kips

Maximum Shaft Superimposed Forces

TIA Revision:	G	
Max. Factored Shaft Mu:	685.88	ft-kips **(* Note)**
Max. Factored Shaft Pu:	24.97	kips
Max Axial Force Type:	Comp.	

(*) Note: Max Shaft Superimposed Moment does not necessarily equal to the shaft top reaction moment

Load Factor	**Shaft Factored Loads**		
1.00	Mu:	685.88	ft-kips
1.00	Pu:	24.97	kips

Material Properties

Concrete Comp. strength, f'c =	4000	psi
Reinforcement yield strength, Fy =	60	ksi
Reinforcing Modulus of Elasticity, E =	29000	ksi
Reinforcement yield strain =	0.00207	
Limiting compressive strain =	0.003	

ACI 318 Code

Select Analysis ACI Code=	2005

Seismic Properties

Seismic Design Category =	D
Seismic Risk =	**High**

Solve (Run) <-- Press Upon Completing All Input

Results:

Governing Orientation Case: **2**

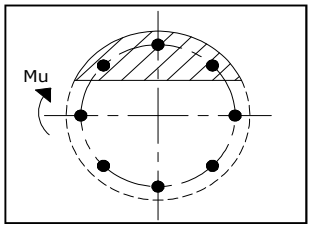

Case 1

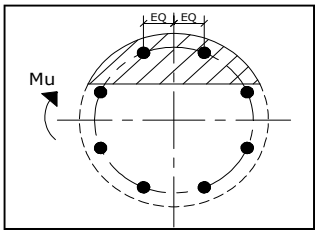

Case 2

Dist. From Edge to Neutral Axis:	**12.37**	in
Extreme Steel Strain, ϵt:	**0.0120**	
	ϵt > 0.0050, Tension Controlled	
Reduction Factor,φ:	**0.900**	

Output Note: Negative Pu=Tension

For Axial Compression, φ Pn = Pu:	24.97	kips
Drilled Shaft Moment Capacity, φMn:	**4231.24**	ft-kips
Drilled Shaft Superimposed Mu:	**685.88**	ft-kips

(Mu/φMn, Drilled Shaft Flexure CSR:	**16.2%**

CITY OF DUBLIN

Land Use and
Long Range Planning
5800 Shier-Rings Road
Dublin, Ohio 43016-1236

Phone/ TDD: 614-410-4600
Fax: 614-410-4747
Web Site: www.dublin.oh.us

ADMINISTRATIVE REVIEW APPLICATION

(Code Section 99.06, 153.037)

I. PLEASE CHECK THE TYPE OF APPLICATION:

COIC Districts
Select District:

- ☐ HDP
- ☐ LDP
- ☐ I-VC
- ☐ I-CC

Application Type
(COIC Only)

- ☐ Pre-Application Review
- ☐ Development Plan Review
- ☐ Administrative Review
- ☐ Administrative Departures

☑ **Wireless Communication Facility**

Please utilize the applicable *Supplemental Application Requirements* sheet for additional submittal requirements.

II. PROPERTY INFORMATION: This section must be completed.

Property Address(es): 7673 Avery Road Dublin OH 43017	
Tax ID/Parcel Number(s): 273-000368	Parcel Size(s) (Acres): 52.067
Existing Land Use/Development: [6403] owned by Munic.	Existing Zoning:

PLEASE COMPLETE THE FOLLOWING:

Describe the Existing Land Use/Development: Wireless facility / light pole for base ball field.

Describe the Request: Adding three antennas, no ground work.

III. CURRENT PROPERTY OWNER(S): Please attach additional sheets if needed.

Name (Individual or Organization): Village of Dublin Ohio	
Mailing Address: (Street, City, State, Zip Code) 5200 Emerald PKWY Dublin OH 43017	
Daytime Telephone: 614 410 4400	Fax:
Email or Alternate Contact Information:	

IV. APPLICANT(S): This is the person(s) who is submitting the application if different than the property owner(s) listed in part III. Please complete if applicable.

Name: Crown Castle	Applicant is also property owner: yes ☐ no ☑
Organization (Owner, Developer, Contractor, etc.): Crown Castle	
Mailing Address: (Street, City, State, Zip Code) 10300 Ormsby Park Place Suite 501 Louisville Ky 40223	
Daytime Telephone: 502-318-1325	Fax:
Email or Alternate Contact Information:	

V. REPRESENTATIVE(S) OF APPLICANT / PROPERTY OWNER: This is the person(s) who is submitting the application on behalf of the applicant listed in part IV or property owner listed in part III. Please complete if applicable.

Name: Bryan Brawner	
Organization (Owner, Developer, Contractor, etc.): Crown Castle	
Mailing Address: (Street, City, State, Zip Code) 10300 Ormsby Park Place Suite 501 Louisville Ky 40223	
Daytime Telephone: 502-318-1325	Fax:
Email or Alternate Contact Information: bryan.brawner@crowncastle.com	

VI. AUTHORIZATION FOR OWNER'S APPLICANT or REPRESENTATIVE(S): If the applicant is not the property owner, this section must be completed and notarized.

I _____, the owner, hereby authorize _____ to act as my applicant or representative(s) in all matters pertaining to the processing and approval of this application, including modifying the project. I agree to be bound by all representations and agreements made by the designated representative.

Signature of Current Property Owner:	Date:

☐ Check this box if the Authorization for Owner's Applicant or Representative(s) is attached as a separate document

Subscribed and sworn before me this _____ day of _____, 20 _____

State of _____

County of _____ Notary Public _____

VII. AUTHORIZATION TO VISIT THE PROPERTY: Site visits to the property by City representatives are essential to process this application. The Owner/Applicant, as noted below, hereby authorizes City representatives to visit, photograph and post a notice on the property described in this application.

I Bryan Brawner, the owner or authorized representative, hereby authorize City representatives to visit, photograph and post a notice on the property described in this application.

Signature of applicant or authorized representative: Bryan Brawner	Date: 2/10/2014

VIII. UTILITY DISCLAIMER: The Owner/Applicant acknowledges the approval of this request for review by the Dublin Planning and Zoning Commission and/or Dublin City Council does not constitute a guarantee or binding commitment that the City of Dublin will be able to provide essential services such as water and sewer facilities when needed by said Owner/Applicant.

I Bryan Brawner, the owner or authorized representative, acknowledge that approval of this request does not constitute a guarantee or binding commitment that the City of Dublin will be able to provide essential services such as water and sewer facilities when needed by said Owner/Applicant.	
Signature of applicant or authorized representative: Bryan Brawner	Date: 2/10/2014

IX. APPLICANT'S AFFIDAVIT: This section must be completed and notarized.

I Bryan Brawner, the owner or authorized representative, have read and understand the contents of this application. The information contained in this application, attached exhibits and other information submitted is complete and in all respects true and correct, to the best of my knowledge and belief.	
Signature of applicant or authorized representative: Bryan Brawner	Date: 2/10/2014

Subscribed and sworn to before me this 10th day of February, 20 14

State of Kentucky

County of Jefferson

Notary Public Barbara Saive

BARBARA SAIVE
My Commission Expires
NOTARY PUBLIC
09-14-2016
STATE AT LARGE, KENTUCKY

FOR OFFICE USE ONLY			
Amount Received:	Application No:	ART Decision:	ART Action:
Receipt No:	Map Zone:	Date Received:	Received By:
Type of Request:			
N, S, E, W (Circle) Side of:			
N, S, E, W (Circle) Side of Nearest Intersection:			
Distance from Nearest Intersection:			
Existing Zoning District:			

CITY OF DUBLIN

WIRELESS COMMUNICATION FACILITY

Application Requirement Checklist

Application & Supporting Materials

1 **APPLICATION FEE**

2 **CD** - ONE (1) DIGITAL COPY CONTAINING ALL APPLICATION MATERIALS REQUIRED FOR SUBMISSION.
Files must be labeled and submitted as PDFs or JPEGs, or other appropriate electronic format.

3 **ORIGINAL SIGNED AND NOTARIZED ADMINISTRATIVE REVIEW TEAM APPLICATION FORM** - ONE (1) ORIGINAL

4 **LEGAL DESCRIPTION AND/OR PROPERTY SURVEY FOR EACH PARCEL INCLUDED** - ONE (1) COPY

5 **LIST OF PROPERTY OWNERS AND REGISTERED HOMEOWNERS ASSOCIATIONS WITHIN 300 FEET** - ONE (1) COPY THAT INCLUDES:

- A Parcel number
- B Owner name
- C Complete address

6 **APPLICATION STATEMENT THAT INCLUDES THE FOLLOWING:**

- A Describe the proposed wireless communication facility, including type, height, location, and other relevant details.
- B State how the proposal is compliant with the requirements of Code Section 99.06(B)(4) and all applicable federal, state or local laws.
- C Explain the applicant's ability or inability to use existing towers, other structures or alternative technology not requiring the use of towers or structures, to provide the services planned for the use of the proposed new tower.

7 **NOTARIZED STATEMENT BY THE APPLICANT AFFIRMING THAT THE CONSTRUCTION OF THE TOWER WILL ACCOMMODATE CO-LOCATION OF ADDITIONAL ANTENNAS FOR FUTURE USERS**

8 **24-HOUR EMERGENCY CONTACT INFORMATION**
For entities providing the backhaul network for the tower(s) described in the application and other wireless communications sites owned or operated by the applicant in the municipality.

9 **AN INVENTORY OF THE EXISTING AND APPROVED TOWERS, ANTENNAS, AND ALTERNATIVE TOWER STRUCTURES**
Must include towers, antennas, and alternative tower structures within the jurisdiction or within two miles of the border of the city. (The City may share this information with other applicants or other organizations seeking to locate towers or antennas within the jurisdiction of Dublin or other communities. However, the City is not, by sharing this information, in any way representing or warranting that the sites are available or suitable.) THE INVENTORY SHALL SHOW EACH TOWER AND ANTENNA AND INCLUDE:

- A A map showing each location, by address, including straight-line distances between each tower.
- B Height and design of each existing tower.
- C Tower operator/owner.
- D Co-location capability of each tower, including alternative tower structures.

Land Use and Long Range Planning | 5800 Shier Rings Road Dublin, Ohio 43016 | **Phone:** 614-410-4600 | **Fax:** 614-410-4747 | Web Site: www.dublin.oh.us

Plans & Maps

All plans require ONE (1) large (24 x 36) and TEN (10) small (11 x 17) copies to scale and dimensioned unless otherwise noted. The scale may not be less than 1" = 50'. Plans must be stapled, collated, and folded. Additional copies of plans may be requested prior to the case being placed on a meeting agenda.

1 SITE PLAN - INCLUDE THE FOLLOWING:

- A The location, type and height of the proposed tower (height of the structure and overall height from grade)
- B Existing land uses and existing zoning districts.
- C Adjacent land uses and zoning districts (including other municipalities).
- D Adjacent roadways and access.
- E Setbacks between the proposed tower and auxiliary structures and the nearest property lines.
- F The separation distance from other towers described in the inventory of existing sites. The applicant shall also identify the type of construction of the existing tower(s) and the owner/operator fo the existing tower(s), if known.
- G Existing and proposed topography.

2 LANDSCAPE PLAN - INCLUDE THE FOLLOWING:

- A Specific landscape materials, locations and installation sizes in accordance with the landscape code provisions of zoning code section 153.130, and 153.133(c) in particular.
- B Location and method of fencing, if any, including height, material, style and color.
- C If applicable, the method of camouflage and illumination.

3 ELEVATIONS

Show the proposed tower and any other associated structures.

4 MATERIALS - TEN (10) 8.5 x 11 CUT-SHEETS AND DESCRIPTIONS OF PROPOSED MATERIALS

Any materials relevant to the proposal.

5 PROPOSED SIGNS

Include dimensions, colors, and text.

Land Use and Long Range Planning | 5800 Shier Rings Road Dublin, Ohio 43016 | **Phone:** 614-410-4600 | **Fax:** 614-410-4747 | Web Site: www.dublin.oh.us

Existing Legal description – Access/Utility Easement

A part of the Village of Dublin, in Virginia Military Survey No. 3009, Franklin County, Ohio, described as follows: Commencing at the intersection of the centerline of Brand Road with the centerline of Avery Road; thence South 16 degrees 32 minutes 28 seconds East 285.19 feet along the centerline of said Avery Road to the northeast corner of the owner's land; thence South 81 degrees 10 minutes 00 seconds West 30.01 feet along the north line of the owner's land to the western boundary of said Avery Road; thence South 16 degrees 32 minutes 28 seconds East 319.94 feet along the boundary of said Avery Road to the point of beginning of this description: thence continuing South 16 degrees 32 minutes 28 seconds East 32.29 feet along said boundary; thence South 74 degrees 01 minute 59 seconds West 254.36 feet; thence Northwesterly 56.16 feet along an arc to the right and having a radius of 40.00 feet and subtended by a long chord having a bearing of North 65 degrees 44 minutes 33 seconds West and a length of 51.66 feet; thence Northwesterly 68.46 feet along an arc to the left and having a radius of 49.00 feet and subtended by a long chord having a bearing of North 65 degrees 33 minutes 17 seconds West and a length of 63.02 feet; thence South 74 degrees 25 minutes 18 seconds West 385.23 feet; thence South 5 degrees 10 minutes 12 seconds East 7.56 feet; thence South 84 degrees 49 minutes 48 seconds West 15.00 feet; thence North 5 degrees 10 minutes 12 West 25.14 feet; thence North 74 degrees 25 minutes 18 seconds East 396.81 feet; thence Southeasterly 74.32 feet along an arc to the right and having a radius of 69.00 feet and subtended by a long chord having a bearing of South 74 degrees 43 minutes 24 seconds East and a length of 70.78 feet; thence Southeasterly 26.41 feet along an arc to the left and having a radius of 93.00 feet and subtended by a long chord having a bearing of South 52 degrees 00 minutes 22 seconds East and a length of 26.32 feet; thence Southeasterly 10.40 feet along an arc to the left and having a radius of 13.00 feet and subtended by a long chord having a bearing of South 83 degrees 03 minutes 12 seconds East and a length of 10.12 feet; thence North 74 degrees 01 minute 59 seconds East 256.02 feet to the point of beginning and containing 19,028 square feet, more or less.

Subject to a 0.675–acre ingress and egress easement.

Existing Legal description – Utility Easement #1

A part of the Village of Dublin, in Virginia Military Survey No. 3009, Franklin County, Ohio, described as follows: Commencing at the intersection of the centerline of Brand Road with the centerline of Avery Road; thence South 16 degrees 32 minutes 28 seconds East 285.19 feet along the centerline of said Avery Road to the northeast corner of the owner's land; thence South 81 degrees 10 minutes 00 seconds West 30.01 feet along the north line of the owner's land to the western boundary of said Avery Road; thence South 16 degrees 32 minutes 28 seconds East 260.32 feet along the boundary of said Avery Road to the point of beginning of this description: thence continuing South 16 degrees 32 minutes 28 seconds East 10.00 feet along said boundary; thence South 74 degrees 25 minutes 19 seconds West 305.14 feet; thence Westerly 37.61 feet along an arc to the left and having a radius of 69.00 feet and subtended by a long chord having a bearing of North 89 degrees 57 minutes 47 seconds West and a length of 37.15 feet; thence North 74 degrees 25 minutes 19 seconds East 340.75 feet to the point of beginning and containing 3,166 square feet, more or less.

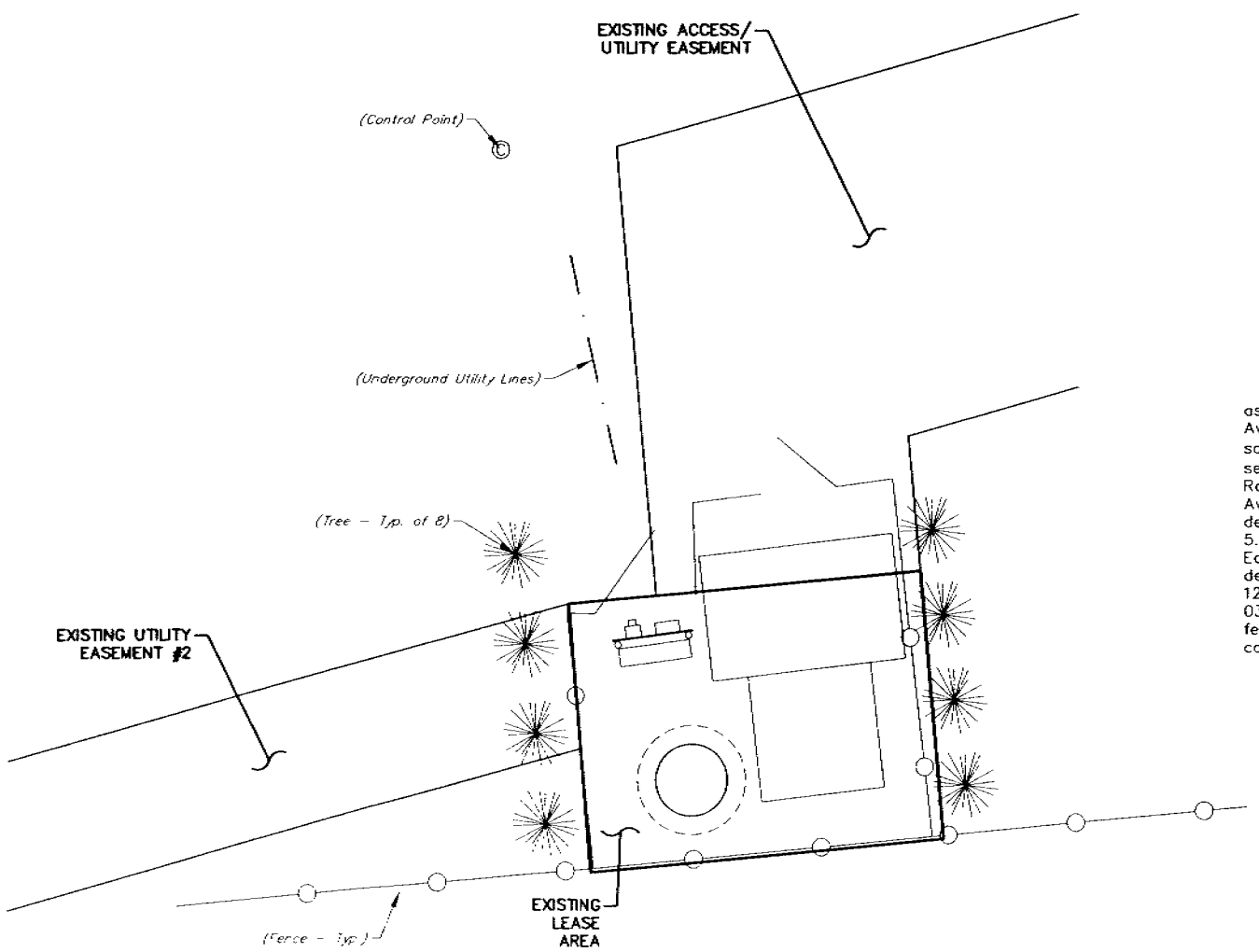

AS–BUILT SURVEY

OF LEASE PARCEL
PORTION OF TAX PARCEL 273–000368
VILLAGE OF DUBLIN, OHIO

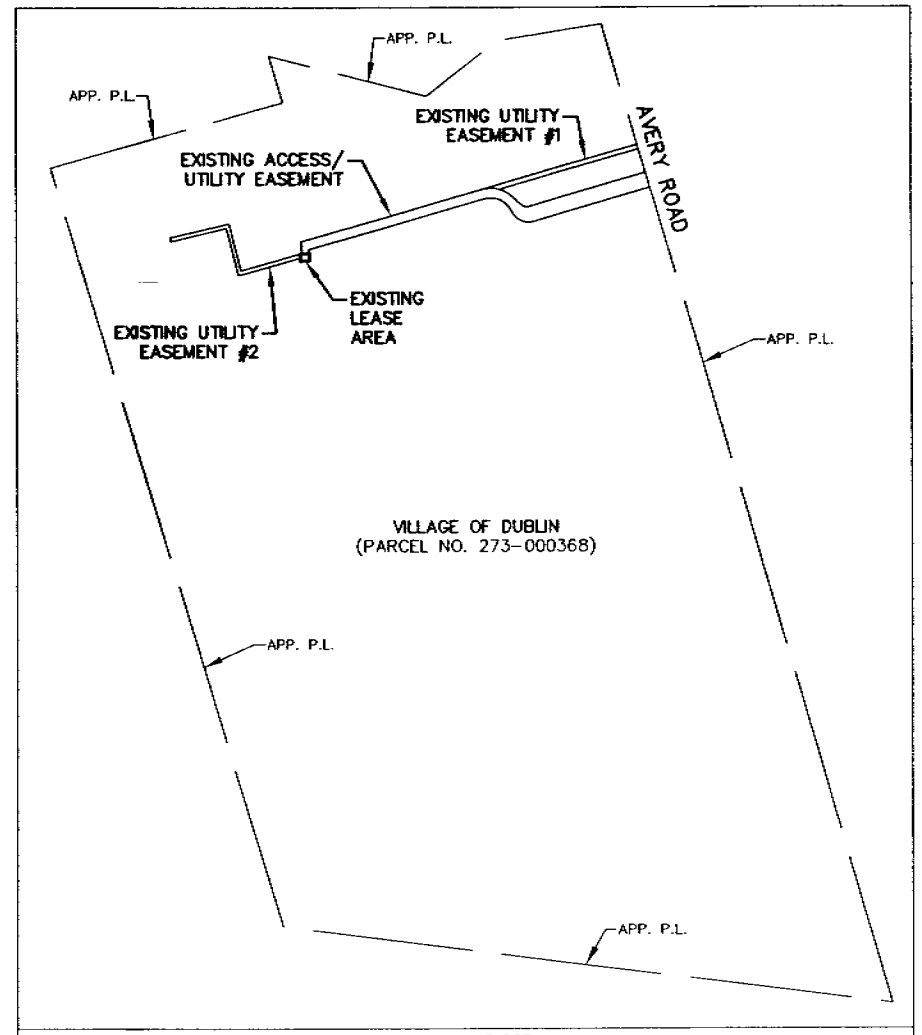

PARENT TRACT DETAIL
SCALE: 1 INCH = 400 FEET

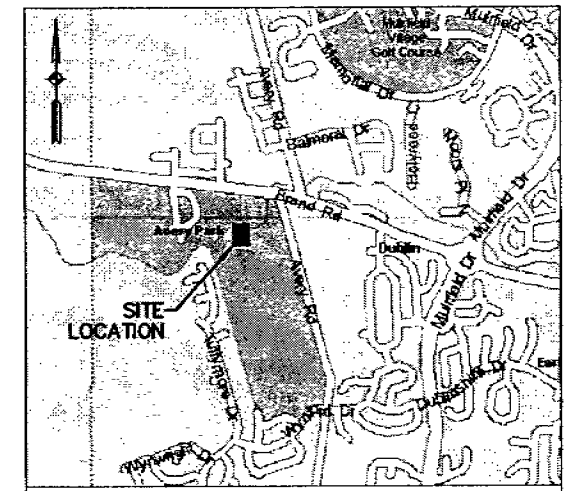

VICINITY MAP
NOT TO SCALE

FLOOD NOTE

According to my interpretations of Community Panel No. 39049C0018J of the Flood Insurance Rate Maps for Franklin County, Ohio, dated 3/16/04 the subject property is in Flood Zone "X".

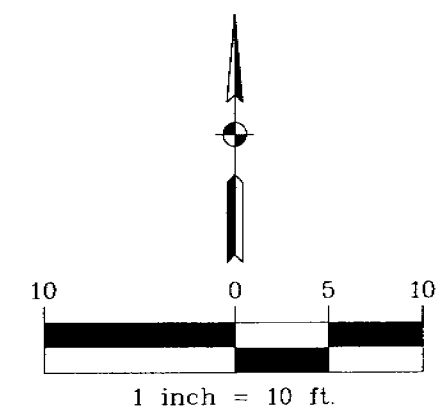

Existing Legal description – Utility Easement #2

A part of the Village of Dublin, in Virginia Military Survey No. 3009, Franklin County, Ohio, described as follows: Commencing at the intersection of the centerline of Brand Road with the centerline of Avery Road; thence South 16 degrees 32 minutes 28 seconds East 285.19 feet along the centerline of said Avery Road to the northeast corner of the owner's land; thence South 81 degrees 10 minutes 00 seconds West 30.01 feet along the north line of the owner's land to the western boundary of said Avery Road; thence South 16 degrees 32 minutes 28 seconds East 260.32 feet along the boundary of said Avery Road; thence South 74 degrees 25 minutes 19 seconds West 737.56 feet; thence South 5 degrees 10 minutes 12 seconds East 25.14 feet; thence South 84 degrees 49 minutes 50 seconds West 5.00 feet to the point of beginning of this description: thence South 5 degrees 10 minutes 12 seconds East 8.13 feet; thence South 74 degrees 25 minutes 18 seconds West 135.11 feet; thence North 14 degrees 45 minutes 01 second West 100.60 feet; thence South 77 degrees 03 minutes 43 seconds West 121.50 feet; thence North 12 degrees 56 minutes 18 seconds West 8.00 feet; thence North 77 degrees 03 minutes 43 seconds East 129.25 feet; thence South 14 degrees 45 minutes 01 second East 100.24 feet; thence North 74 degrees 25 minutes 18 seconds East 128.46 feet to the point of beginning and containing 2,861 square feet, more or less.

Given under my hand and seal 11/3/05

Benson G. Hinshaw
Registered Land Surveyor No. S–7909
State of Ohio

BENSON G. HINSHAW
REGISTERED
No.
S-7909
STATE OF
OHIO
LAND SURVEYOR

This survey was prepared by First Group Engineering, Inc., 5714 West 74th Street, Indianapolis, IN, using features located in the field and information supplied by the client. The boundary depicted herein was not necessarily created from a title report nor compared with adjoiners deeds.

SHEET 1 OF 2

SITE #3016597
DUBLIN FIRE DEPARTMENT
FRANKLIN COUNTY, DUBLIN, OHIO

SURVEY WORK PERFORMED BY:

FIRST GROUP ENGINEERING INC.
CONSULTING ENGINEERS
5714 W. 74TH STREET, INDIANAPOLIS, INDIANA
PH. (317) 290–9549 FAX (317) 290–9560

NATIONAL SURVEY SERVICES COORDINATION BY:

GEOLINE SURVEYING, INC.

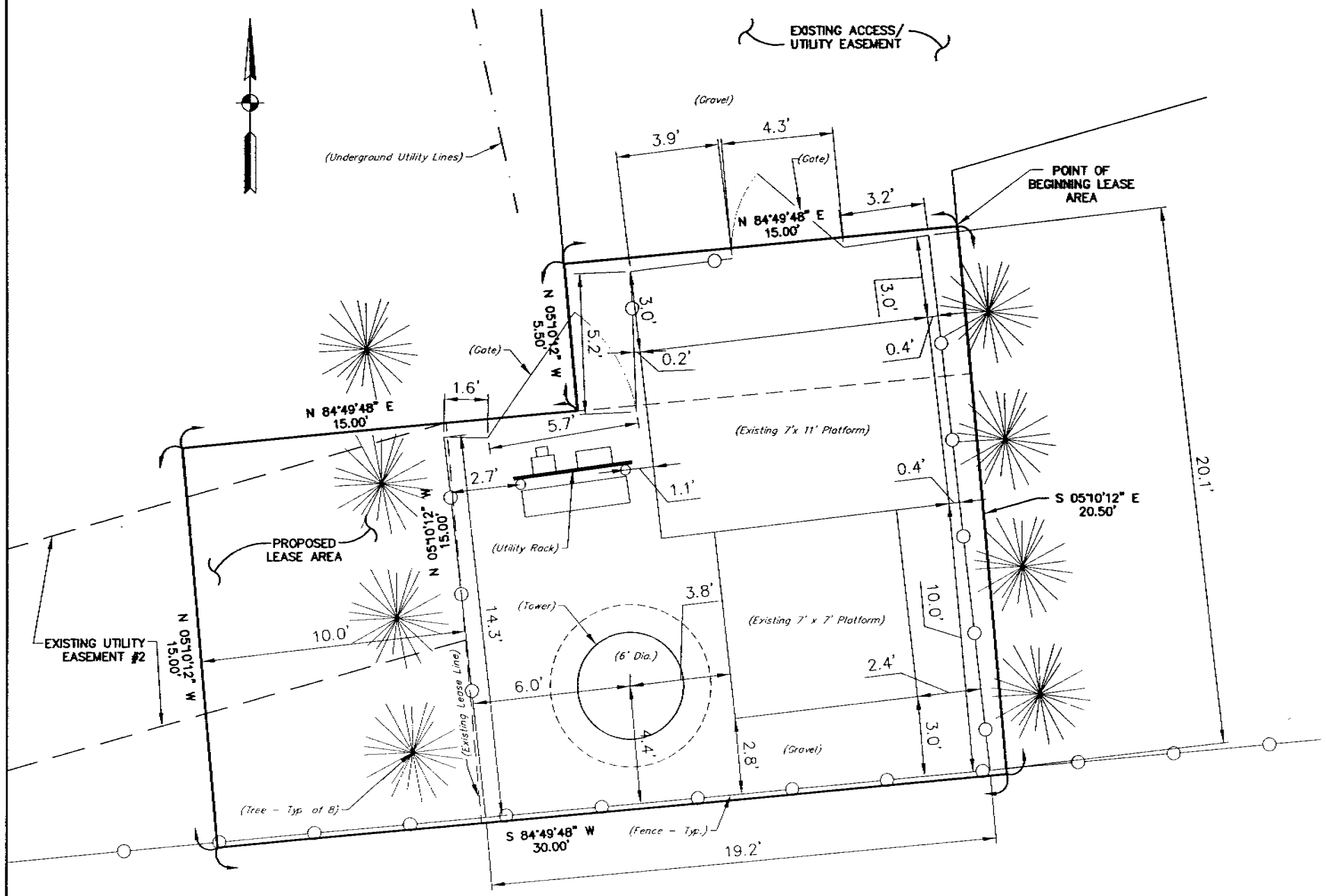

COMPOUND DETAIL
SCALE: 1" = 5'

SURVEYOR'S CERTIFICATION

I, Benson G. Hinshaw, do hereby certify to Global Signal Acquisitions II LLC.That this survey was made on the ground under my personal supervision and that this plat is a true, correct and accurate representation of the facts as found at the time of the survey, and more specifically, I so hereby certify that the survey conforms to the conditions and stipulations as checked (x) below.

(X) 1. The boundary lines and dimensions of the land indicated hereon and each individual parcel thereof indicated hereon is correct.

(X) 2. To the extent the land indicated hereon is part of a parent parcel, such land is located within the boundaries of the record title legal description of such parent parcel as described and reflected on the inset shown hereon.

( ) 3. Iron pipes are set at each property corner unless otherwise indicated hereon.

( ) 4. The distance from the nearest intersecting public street or road is as shown hereon.

( ) 5. Correctly shows the location and dimension of all alleys, streets, roads, rights-of-way, easement and other matters of record which the surveyor has been advised affects the subject property (each has been identified by instrument volume and page number if available).

( ) 6. Except as shown, there are no visible easements, rights-of way, party walls or conflicts; further, this survey is not subject to any easements or rights-of-way not visible on the ground.

( ) 7. The location of all buildings, structures and other improvements of visible items, if shown, are as indicated hereon.

( ) 8. Except as shown, there are no visible protrusions on adjoining premises, streets or alleys by any building, structure or other improvements situated on the subject property.

( ) 9. Except as shown, there are no visible encroachments onto the subject property by any building, structure or other improvements situated on adjoining premises.

(X) 10. Correctly shows the location and acres contained in all portions of the subject property which are located in an area designated as a "FLOOD PRONE AREA (ZONE A)" as defined by the U.S. Department of Housing and Urban Development pursuant to the Flood Disaster Act of 1973; NONE, FIRM Community Panel No.

(X) 11. Correctly describes and shows the location of all public streets and roads visibly providing access to and from the subject property, and correctly sets forth the municipal address of the subject property.

( ) 12. Correctly depicts the latitudinal and longitudinal coordinates of the tower(s) location(s), to the nearest tenth of a second, the elevation above mean sea level of the base and tip of each tower, plus or minus 20 feet, the elevation of the tip of each tower as measured from ground level, and additionally, the elevation of the tip of the highest appurtenance on the tower as measured from ground level, if such appurtenance is higher in elevation than the highest point of the tower structure itself, to the nearest foot, on the survey drawing and on a separate 81/2 x11 certified letterhead.

( ) 13. Survey meets or exceeds the minimum technical standards for Land Boundary surveys set forth by _____ State Law.

( ) 14. The subject property is currently zoned _____.

(X) 15. If the survey is developed electronically (CAD File), such file has been provided to: Geoline Surveying, Inc.

Proposed Legal description – Lease Area

A part of the Village of Dublin, in Virginia Military Survey No. 3009, Franklin County, Ohio, described as follows: Commencing at the intersection of the centerline of Brand Road with the centerline of Avery Road; thence South 16 degrees 32 minutes 28 seconds East 285.19 feet along the centerline of said Avery Road to the northeast corner of the owner's land; thence South 81 degrees 10 minutes 00 seconds West 30.01 feet along the north line of the owner's land to the western boundary of said Avery Road; thence South 16 degrees 32 minutes 28 seconds East 352.23 feet along the boundary of said Avery Road; thence South 74 degrees 01 minute 59 seconds West 254.36 feet; thence Northwesterly 56.16 feet along an arc to the right and having a radius of 40.00 feet and subtended by a long chord having a bearing of North 65 degrees 44 minutes 33 seconds West and a length of 51.66 feet; thence Northwesterly 68.46 feet along an arc to the left and having a radius of 49.00 feet and subtended by a long chord having a bearing of North 65 degrees 33 minutes 17 seconds West and a length of 63.02 feet; thence South 74 degrees 25 minutes 18 seconds West 385.23 feet; thence South 5 degrees 10 minutes 12 seconds East 2.06 feet to the point of beginning of this description: thence continuing South 5 degrees 10 minutes 12 seconds East 20.50 feet; thence South 84 degrees 49 minutes 48 seconds West 30.00 feet; thence North 5 degrees 10 minutes 12 seconds West 15.00 feet; thence North 84 degrees 49 minutes 48 seconds East 15.00 feet; thence North 5 degrees 10 minutes 12 seconds West 5.50 feet; thence North 84 degrees 49 minutes 48 seconds East 15.00 feet to the point of beginning and containing 533 square feet, more or less.

Given under my hand and seal 12/18/05

Benson G Hinshaw
Registered Land Surveyor No. S-7909
State of Ohio

BENSON G. HINSHAW
REGISTERED
No.
S-7909
STATE OF
OHIO
LAND SURVEYOR

This survey was prepared by First Group Engineering, Inc., 5714 West 74th Street, Indianapolis, IN, using features located in the field and information supplied by the client. The boundary depicted herein was not necessarily created from a title report nor compared with adjoiners deeds

SHEET 2 OF 2

SITE #3016597
DUBLIN FIRE DEPARTMENT
FRANKLIN COUNTY, DUBLIN, OHIO

SURVEY WORK PERFORMED BY:

FIRST GROUP ENGINEERING INC.
CONSULTING ENGINEERS
5714 W. 74TH STREET, INDIANAPOLIS, INDIANA
PH. (317) 290-9549 FAX (317) 290-9560

NATIONAL SURVEY SERVICES COORDINATION BY:

GEOLINE SURVEYING, INC.

Existing Legal description – Access/Utility Easement

A part of the Village of Dublin, in Virginia Military Survey No. 3009, Franklin County, Ohio, described as follows: Commencing at the intersection of the centerline of Brand Road with the centerline of Avery Road; thence South 16 degrees 32 minutes 28 seconds East 285.19 feet along the centerline of said Avery Road to the northeast corner of the owner's land; thence South 81 degrees 10 minutes 00 seconds West 30.01 feet along the north line of the owner's land to the western boundary of said Avery Road; thence South 16 degrees 32 minutes 28 seconds East 319.94 feet along the boundary of said Avery Road to the point of beginning of this description: thence continuing South 16 degrees 32 minutes 28 seconds East 32.29 feet along said boundary; thence South 74 degrees 01 minute 59 seconds West 254.36 feet; thence Northwesterly 56.16 feet along an arc to the right and having a radius of 40.00 feet and subtended by a long chord having a bearing of North 65 degrees 44 minutes 33 seconds West and a length of 51.66 feet; thence Northwesterly 68.46 feet along an arc to the left and having a radius of 49.00 feet and subtended by a long chord having a bearing of North 65 degrees 33 minutes 17 seconds West and a length of 63.02 feet; thence South 74 degrees 25 minutes 18 seconds West 385.23 feet; thence South 5 degrees 10 minutes 12 seconds East 7.56 feet; thence South 84 degrees 49 minutes 48 seconds West 15.00 feet; thence North 5 degrees 10 minutes 12 West 25.14 feet; thence North 74 degrees 25 minutes 18 seconds East 396.81 feet; thence Southeasterly 74.32 feet along an arc to the right and having a radius of 69.00 feet and subtended by a long chord having a bearing of South 74 degrees 43 minutes 24 seconds East and a length of 70.78 feet; thence Southeasterly 26.41 feet along an arc to the left and having a radius of 93.00 feet and subtended by a long chord having a bearing of South 52 degrees 00 minutes 22 seconds East and a length of 26.32 feet; thence Southeasterly 10.40 feet along an arc to the left and having a radius of 13.00 feet and subtended by a long chord having a bearing of South 83 degrees 03 minutes 12 seconds East and a length of 10.12 feet; thence North 74 degrees 01 minute 59 seconds East 256.02 feet to the point of beginning and containing 19,028 square feet, more or less.

Subject to a 0.675-acre ingress and egress easement.

Existing Legal description – Utility Easement #1

A part of the Village of Dublin, in Virginia Military Survey No. 3009, Franklin County, Ohio, described as follows: Commencing at the intersection of the centerline of Brand Road with the centerline of Avery Road; thence South 16 degrees 32 minutes 28 seconds East 285.19 feet along the centerline of said Avery Road to the northeast corner of the owner's land; thence South 81 degrees 10 minutes 00 seconds West 30.01 feet along the north line of the owner's land to the western boundary of said Avery Road; thence South 16 degrees 32 minutes 28 seconds East 260.32 feet along the boundary of said Avery Road to the point of beginning of this description: thence continuing South 16 degrees 32 minutes 28 seconds East 10.00 feet along said boundary; thence South 74 degrees 25 minutes 19 seconds West 305.14 feet; thence Westerly 37.61 feet along an arc to the left and having a radius of 69.00 feet and subtended by a long chord having a bearing of North 89 degrees 57 minutes 47 seconds West and a length of 37.15 feet; thence North 74 degrees 25 minutes 19 seconds East 340.75 feet to the point of beginning and containing 3,166 square feet, more or less.

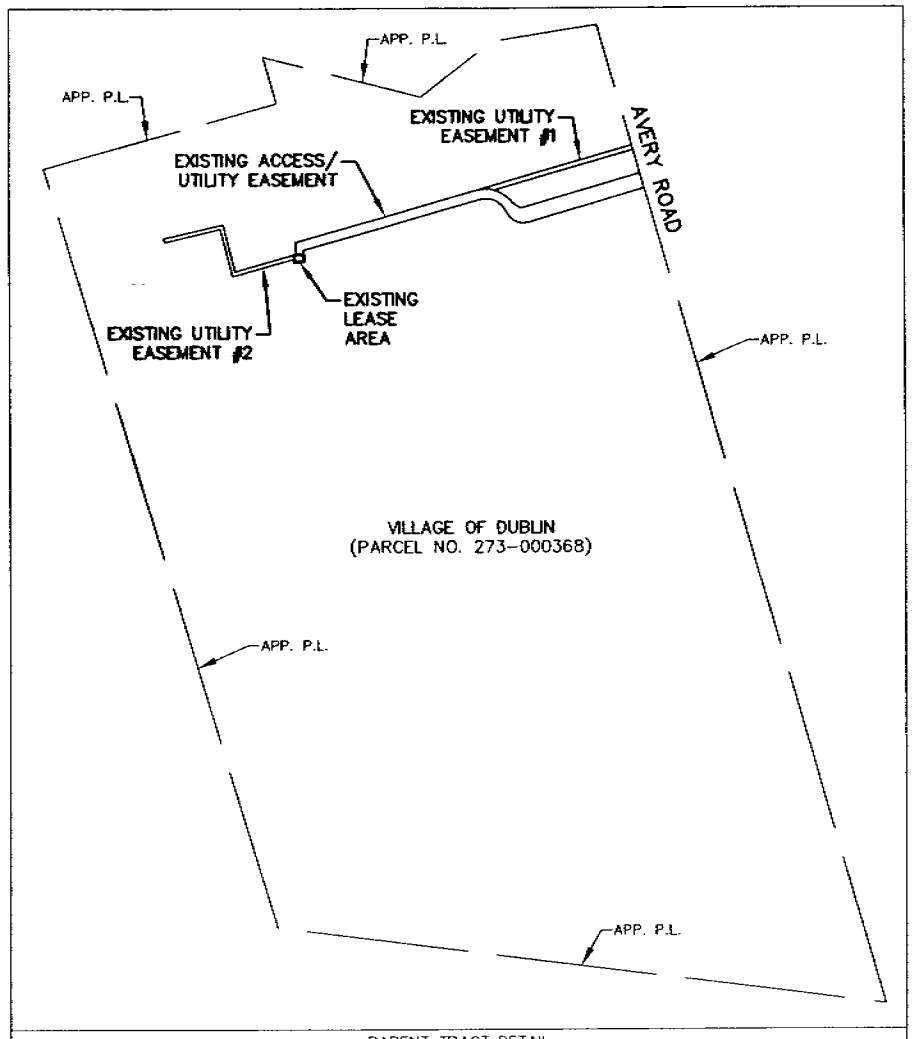

PARENT TRACT DETAIL
SCALE: 1 INCH = 400 FEET

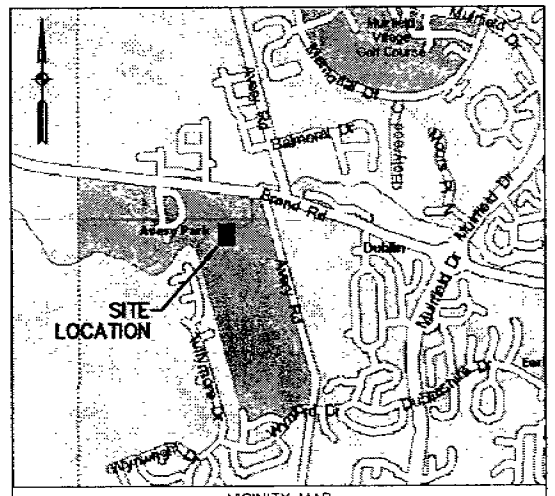

VICINITY MAP
NOT TO SCALE

FLOOD NOTE

According to my interpretations of Community Panel No. 39049C0018J of the Flood Insurance Rate Maps for Franklin County, Ohio, dated 3/16/04 the subject property is in Flood Zone "X".

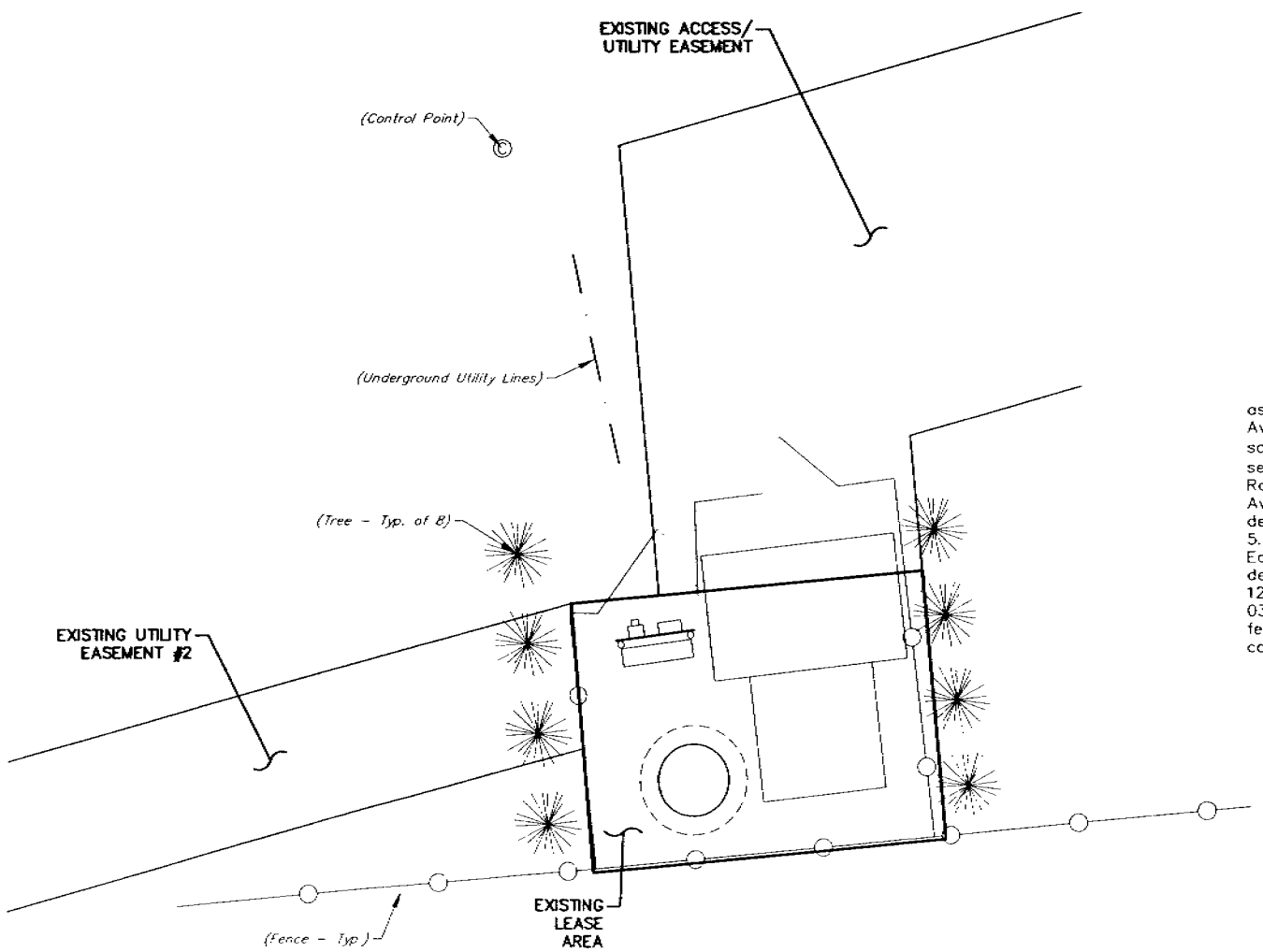

AS-BUILT SURVEY

OF LEASE PARCEL
PORTION OF TAX PARCEL 273-000368
VILLAGE OF DUBLIN, OHIO

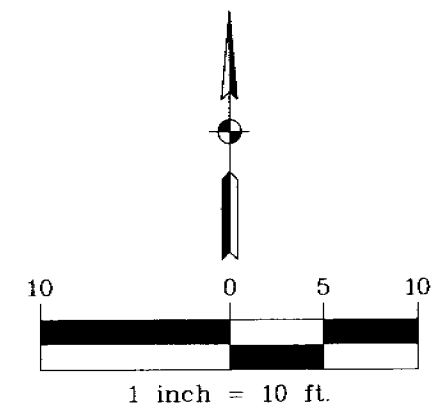

Existing Legal description – Utility Easement #2

A part of the Village of Dublin, in Virginia Military Survey No. 3009, Franklin County, Ohio, described as follows: Commencing at the intersection of the centerline of Brand Road with the centerline of Avery Road; thence South 16 degrees 32 minutes 28 seconds East 285.19 feet along the centerline of said Avery Road to the northeast corner of the owner's land; thence South 81 degrees 10 minutes 00 seconds West 30.01 feet along the north line of the owner's land to the western boundary of said Avery Road; thence South 16 degrees 32 minutes 28 seconds East 260.32 feet along the boundary of said Avery Road; thence South 74 degrees 25 minutes 19 seconds West 737.56 feet; thence South 5 degrees 10 minutes 12 seconds East 25.14 feet; thence South 84 degrees 49 minutes 50 seconds West 5.00 feet to the point of beginning of this description: thence South 5 degrees 10 minutes 12 seconds East 8.13 feet; thence South 74 degrees 25 minutes 18 seconds West 135.11 feet; thence North 14 degrees 45 minutes 01 second West 100.60 feet; thence South 77 degrees 03 minutes 43 seconds West 121.50 feet; thence North 12 degrees 56 minutes 18 seconds West 8.00 feet; thence North 77 degrees 03 minutes 43 seconds East 129.25 feet; thence South 14 degrees 45 minutes 01 second East 100.24 feet; thence North 74 degrees 25 minutes 18 seconds East 128.46 feet to the point of beginning and containing 2,861 square feet, more or less.

Given under my hand and seal 11/3/05

Benson G. Hinshaw
Registered Land Surveyor No S-7909
State of Ohio

BENSON G. HINSHAW
REGISTERED
No. S-7909
STATE OF OHIO
LAND SURVEYOR

This survey was prepared by First Group Engineering, Inc., 5714 West 74th Street, Indianapolis, IN, using features located in the field and information supplied by the client. The boundary depicted herein was not necessarily created from a title report nor compared with adjoiners deeds

SHEET 1 OF 2

SITE #3016597
DUBLIN FIRE DEPARTMENT
FRANKLIN COUNTY, DUBLIN, OHIO

SURVEY WORK PERFORMED BY:

FIRST GROUP ENGINEERING INC.
CONSULTING ENGINEERS
5714 W. 74TH STREET, INDIANAPOLIS, INDIANA
PH. (317) 290-9549 FAX (317) 290-9560

NATIONAL SURVEY SERVICES COORDINATION BY:

GEOLINE SURVEYING, INC.

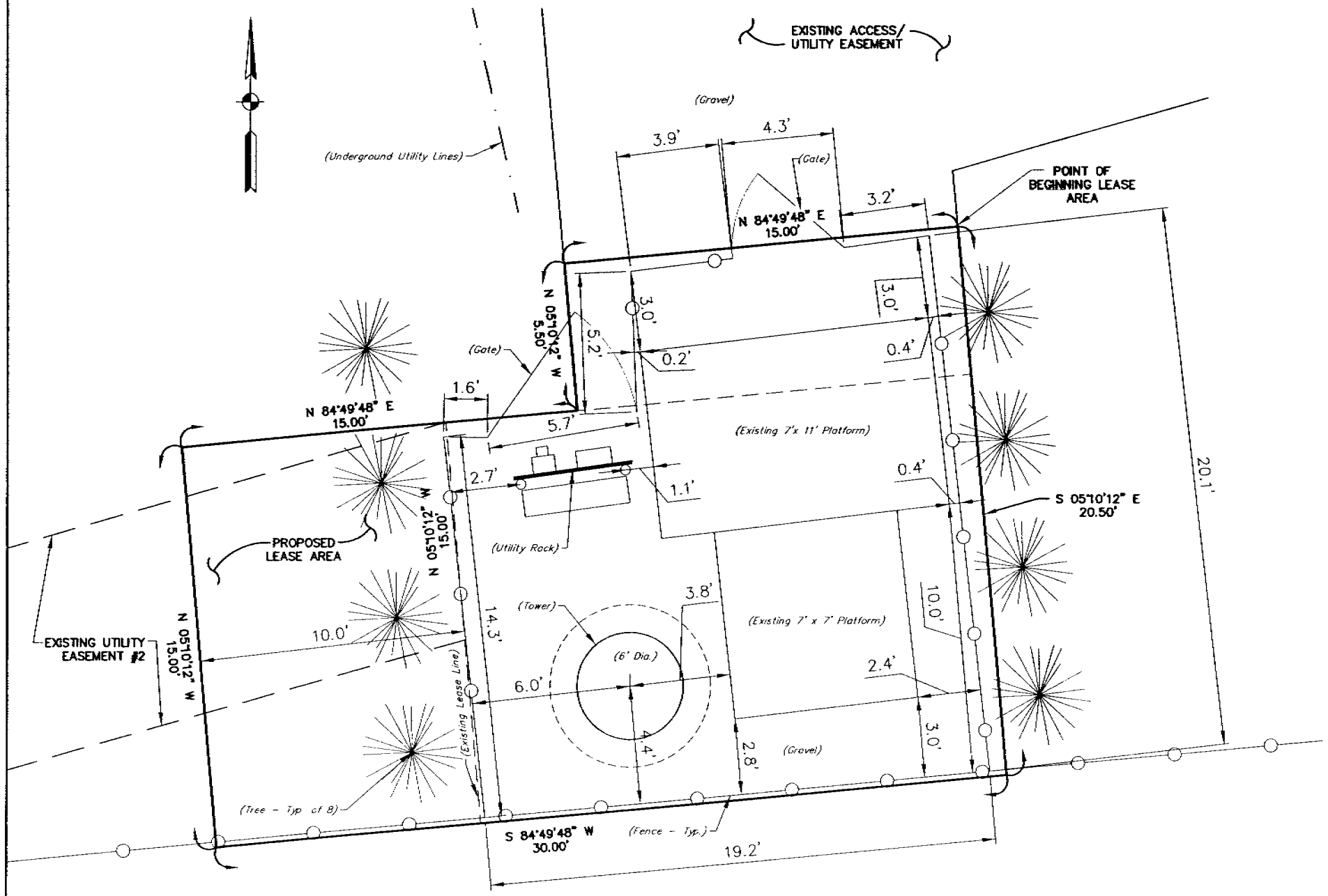

COMPOUND DETAIL
SCALE: 1" = 5'

SURVEYOR'S CERTIFICATION

I, Benson G. Hinshaw, do hereby certify to Global Signal Acquisitions II LLC. That this survey was made on the ground under my personal supervision and that this plat is a true, correct and accurate representation of the facts as found at the time of the survey, and more specifically, I so hereby certify that the survey conforms to the conditions and stipulations as checked (x) below.

(X) 1. The boundary lines and dimensions of the land indicated hereon and each individual parcel thereof indicated hereon is correct.

(X) 2. To the extent the land indicated hereon is part of a parent parcel, such land is located within the boundaries of the record title legal description of such parent parcel as described and reflected on the inset shown hereon.

( ) 3. Iron pipes are set at each property corner unless otherwise indicated hereon.

( ) 4. The distance from the nearest intersecting public street or road is as shown hereon.

( ) 5. Correctly shows the location and dimension of all alleys, streets, roads, rights-of-way, easement and other matters of record which the surveyor has been advised affects the subject property (each has been identified by instrument volume and page number if available).

( ) 6. Except as shown, there are no visible easements, rights-of way, party walls or conflicts; further, this survey is not subject to any easements or rights-of-way not visible on the ground.

( ) 7. The location of all buildings, structures and other improvements of visible items, if shown, are as indicated hereon.

( ) 8. Except as shown, there are no visible protrusions on adjoining premises, streets or alleys by any building, structure or other improvements situated on the subject property.

( ) 9. Except as shown, there are no visible encroachments onto the subject property by any building, structure or other improvements situated on adjoining premises.

(X) 10. Correctly shows the location and acres contained in all portions of the subject property which are located in an area designated as a "FLOOD PRONE AREA (ZONE A)" as defined by the U.S. Department of Housing and Urban Development pursuant to the Flood Disaster Act of 1973; NONE, FIRM Community Panel No.

(X) 11. Correctly describes and shows the location of all public streets and roads visibly providing access to and from the subject property, and correctly sets forth the municipal address of the subject property.

( ) 12. Correctly depicts the latitudinal and longitudinal coordinates of the tower(s) location(s), to the nearest tenth of a second, the elevation above mean sea level of the base and tip of each tower, plus or minus 20 feet, the elevation of the tip of each tower as measured from ground level, and additionally, the elevation of the tip of the highest appurtenance on the tower as measured from ground level, if such appurtenance is higher in elevation than the highest point of the tower structure itself, to the nearest foot, on the survey drawing and on a separate 81/2 x11 certified letterhead.

( ) 13. Survey meets or exceeds the minimum technical standards for Land Boundary surveys set forth by _____ State Law.

( ) 14. The subject property is currently zoned _____.

(X) 15. If the survey is developed electronically (CAD File), such file has been provided to: Geoline Surveying, Inc.

SHEET 2 OF 2

SITE #3016597
DUBLIN FIRE DEPARTMENT
FRANKLIN COUNTY, DUBLIN, OHIO

SURVEY WORK PERFORMED BY:

FIRST GROUP ENGINEERING INC.
CONSULTING ENGINEERS
5714 W. 74TH STREET, INDIANAPOLIS, INDIANA
PH. (317) 290-9549 FAX (317) 290-9560

NATIONAL SURVEY SERVICES COORDINATION BY:

GEOLINE SURVEYING, INC.

Proposed Legal description – Lease Area

A part of the Village of Dublin, in Virginia Military Survey No. 3009, Franklin County, Ohio, described as follows: Commencing at the intersection of the centerline of Brand Road with the centerline of Avery Road; thence South 16 degrees 32 minutes 28 seconds East 285.19 feet along the centerline of said Avery Road to the northeast corner of the owner's land; thence South 81 degrees 10 minutes 00 seconds West 30.01 feet along the north line of the owner's land to the western boundary of said Avery Road; thence South 16 degrees 32 minutes 28 seconds East 352.23 feet along the boundary of said Avery Road; thence South 74 degrees 01 minute 59 seconds West 254.36 feet; thence Northwesterly 56.16 feet along an arc to the right and having a radius of 40.00 feet and subtended by a long chord having a bearing of North 65 degrees 44 minutes 33 seconds West and a length of 51.66 feet; thence Northwesterly 68.46 feet along an arc to the left and having a radius of 49.00 feet and subtended by a long chord having a bearing of North 65 degrees 33 minutes 17 seconds West and a length of 63.02 feet; thence South 74 degrees 25 minutes 18 seconds West 385.23 feet; thence South 5 degrees 10 minutes 12 seconds East 2.06 feet to the point of beginning of this description: thence continuing South 5 degrees 10 minutes 12 seconds East 20.50 feet; thence South 84 degrees 49 minutes 48 seconds West 30.00 feet; thence North 5 degrees 10 minutes 12 seconds West 15.00 feet; thence North 84 degrees 49 minutes 48 seconds East 15.00 feet; thence North 5 degrees 10 minutes 12 seconds West 5.50 feet; thence North 84 degrees 49 minutes 48 seconds East 15.00 feet to the point of beginning and containing 533 square feet, more or less.

Given under my hand and seal 12/16/05

Benson G. Hinshaw
Registered Land Surveyor No. S-7909
State of Ohio

BENSON G. HINSHAW
REGISTERED
No. S-7909
STATE OF OHIO
LAND SURVEYOR

This survey was prepared by First Group Engineering, Inc., 5714 West 74th Street, Indianapolis, IN, using features located in the field and information supplied by the client. The boundary depicted herein was not necessarily created from a title report nor compared with adjoiners deeds.

Existing Legal description – Access/Utility Easement

A part of the Village of Dublin, in Virginia Military Survey No. 3009, Franklin County, Ohio, described as follows: Commencing at the intersection of the centerline of Brand Road with the centerline of Avery Road; thence South 16 degrees 32 minutes 28 seconds East 285.19 feet along the centerline of said Avery Road to the northeast corner of the owner's land; thence South 81 degrees 10 minutes 00 seconds West 30.01 feet along the north line of the owner's land to the western boundary of said Avery Road; thence South 16 degrees 32 minutes 28 seconds East 319.94 feet along the boundary of said Avery Road to the point of beginning of this description: thence continuing South 16 degrees 32 minutes 28 seconds East 32.29 feet along said boundary; thence South 74 degrees 01 minute 59 seconds West 254.36 feet; thence Northwesterly 56.16 feet along an arc to the right and having a radius of 40.00 feet and subtended by a long chord having a bearing of North 65 degrees 44 minutes 33 seconds West and a length of 51.66 feet; thence Northwesterly 68.46 feet along an arc to the left and having a radius of 49.00 feet and subtended by a long chord having a bearing of North 65 degrees 33 minutes 17 seconds West and a length of 63.02 feet; thence South 74 degrees 25 minutes 18 seconds West 385.23 feet; thence South 5 degrees 10 minutes 12 seconds East 7.56 feet; thence South 84 degrees 49 minutes 48 seconds West 15.00 feet; thence North 5 degrees 10 minutes 12 West 25.14 feet; thence North 74 degrees 25 minutes 18 seconds East 396.81 feet; thence Southeasterly 74.32 feet along an arc to the right and having a radius of 69.00 feet and subtended by a long chord having a bearing of South 74 degrees 43 minutes 24 seconds East and a length of 70.78 feet; thence Southeasterly 26.41 feet along an arc to the left and having a radius of 93.00 feet and subtended by a long chord having a bearing of South 52 degrees 00 minutes 22 seconds East and a length of 26.32 feet; thence Southeasterly 10.40 feet along an arc to the left and having a radius of 13.00 feet and subtended by a long chord having a bearing of South 83 degrees 03 minutes 12 seconds East and a length of 10.12 feet; thence North 74 degrees 01 minute 59 seconds East 256.02 feet to the point of beginning and containing 19,028 square feet, more or less.

Subject to a 0.675-acre ingress and egress easement.

Existing Legal description – Utility Easement #1

A part of the Village of Dublin, in Virginia Military Survey No. 3009, Franklin County, Ohio, described as follows: Commencing at the intersection of the centerline of Brand Road with the centerline of Avery Road; thence South 16 degrees 32 minutes 28 seconds East 285.19 feet along the centerline of said Avery Road to the northeast corner of the owner's land; thence South 81 degrees 10 minutes 00 seconds West 30.01 feet along the north line of the owner's land to the western boundary of said Avery Road; thence South 16 degrees 32 minutes 28 seconds East 260.32 feet along the boundary of said Avery Road to the point of beginning of this description: thence continuing South 16 degrees 32 minutes 28 seconds East 10.00 feet along said boundary; thence South 74 degrees 25 minutes 19 seconds West 305.14 feet; thence Westerly 37.61 feet along an arc to the left and having a radius of 69.00 feet and subtended by a long chord having a bearing of North 89 degrees 57 minutes 47 seconds West and a length of 37.15 feet; thence North 74 degrees 25 minutes 19 seconds East 340.75 feet to the point of beginning and containing 3,166 square feet, more or less.

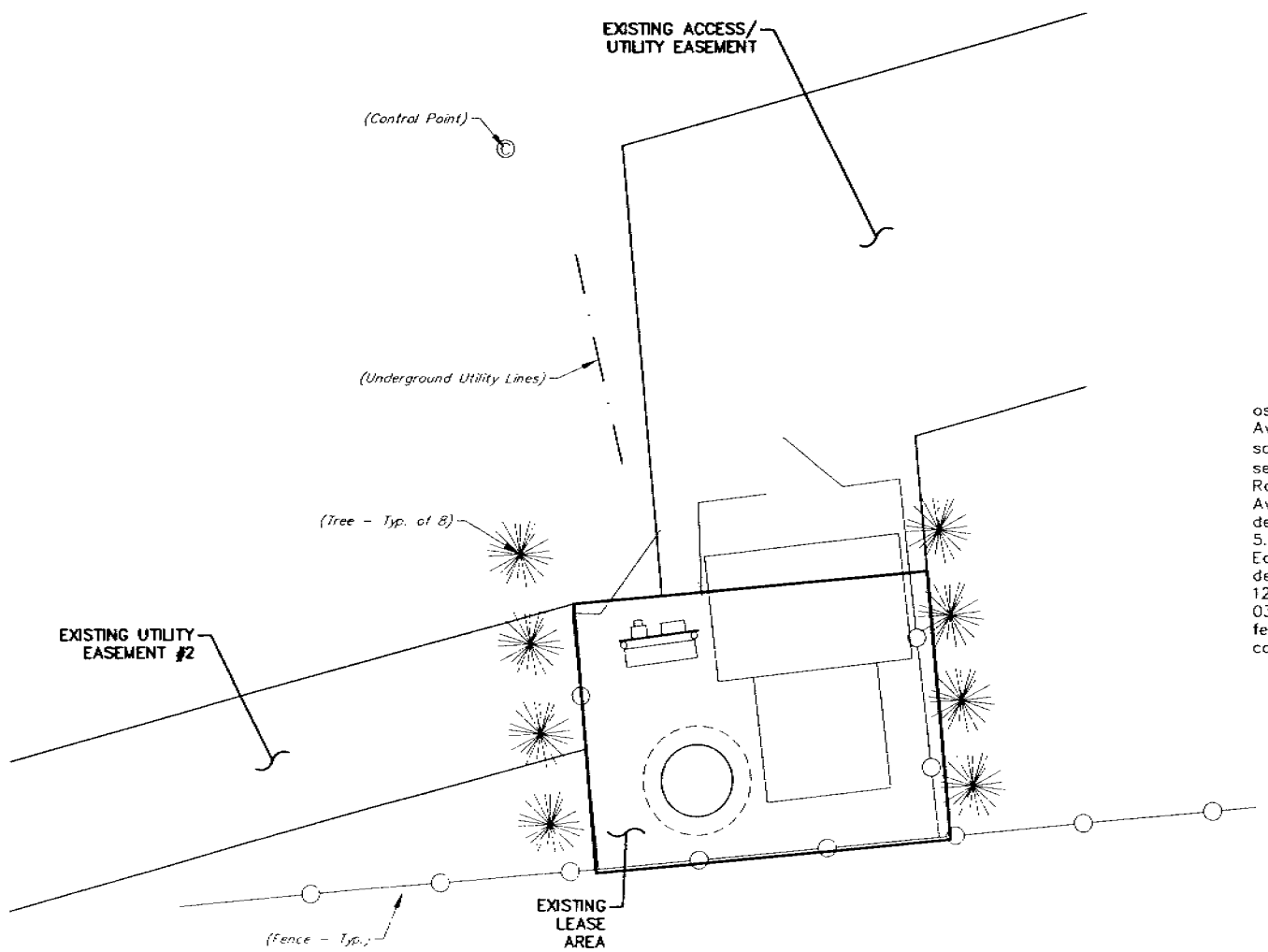

AS-BUILT SURVEY

OF LEASE PARCEL
PORTION OF TAX PARCEL 273-000368
VILLAGE OF DUBLIN, OHIO

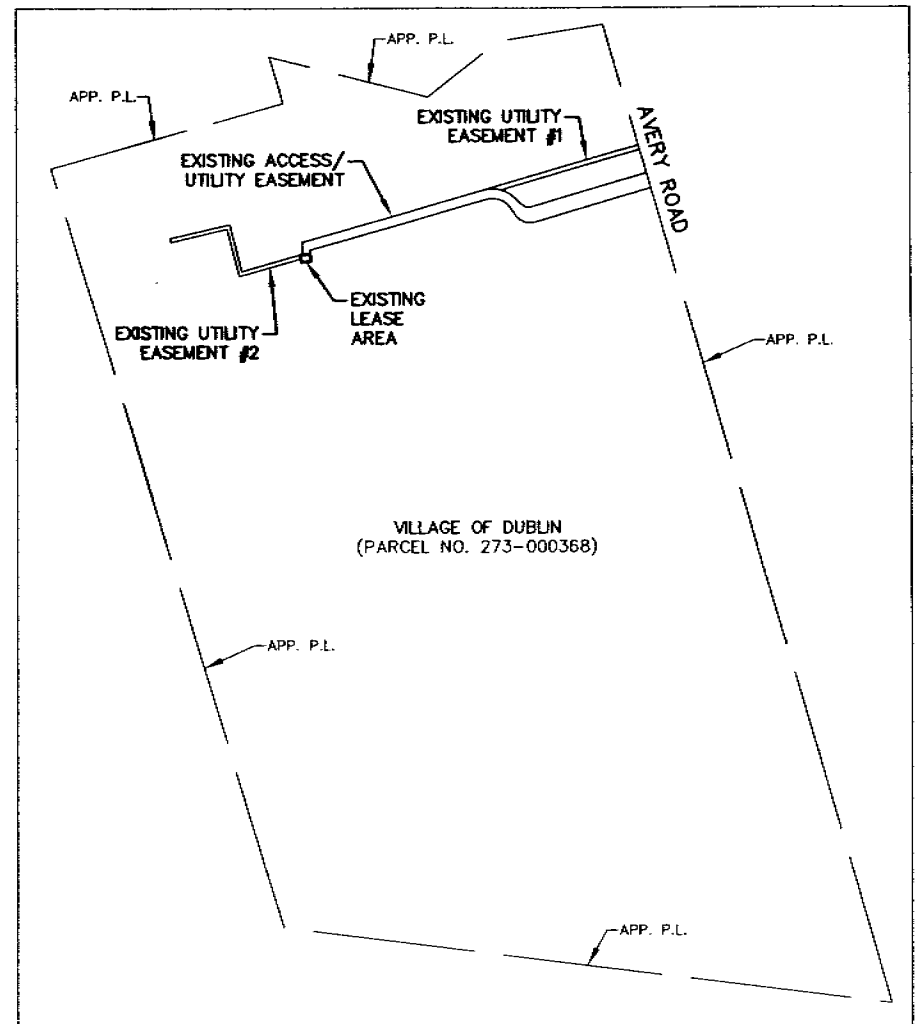

PARENT TRACT DETAIL
SCALE: 1 INCH = 400 FEET

Existing Legal description – Utility Easement #2

A part of the Village of Dublin, in Virginia Military Survey No. 3009, Franklin County, Ohio, described as follows: Commencing at the intersection of the centerline of Brand Road with the centerline of Avery Road; thence South 16 degrees 32 minutes 28 seconds East 285.19 feet along the centerline of said Avery Road to the northeast corner of the owner's land; thence South 81 degrees 10 minutes 00 seconds West 30.01 feet along the north line of the owner's land to the western boundary of said Avery Road; thence South 16 degrees 32 minutes 28 seconds East 260.32 feet along the boundary of said Avery Road; thence South 74 degrees 25 minutes 19 seconds West 737.56 feet; thence South 5 degrees 10 minutes 12 seconds East 25.14 feet; thence South 84 degrees 49 minutes 50 seconds West 5.00 feet to the point of beginning of this description: thence South 5 degrees 10 minutes 12 seconds East 8.13 feet; thence South 74 degrees 25 minutes 18 seconds West 135.11 feet; thence North 14 degrees 45 minutes 01 second West 100.60 feet; thence South 77 degrees 03 minutes 43 seconds West 121.50 feet; thence North 12 degrees 56 minutes 18 seconds West 8.00 feet; thence North 77 degrees 03 minutes 43 seconds East 129.25 feet; thence South 14 degrees 45 minutes 01 second East 100.24 feet; thence North 74 degrees 25 minutes 18 seconds East 128.46 feet to the point of beginning and containing 2,861 square feet, more or less.

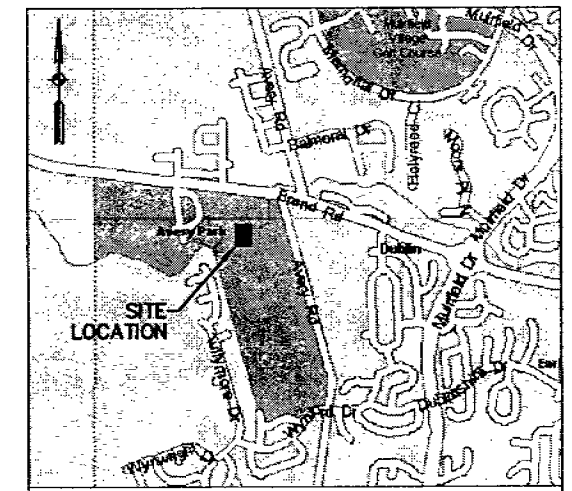

VICINITY MAP
NOT TO SCALE

FLOOD NOTE

According to my interpretations of Community Panel No. 39049C0018J of the Flood Insurance Rate Maps for Franklin County, Ohio, dated 3/16/04 the subject property is in Flood Zone "X".

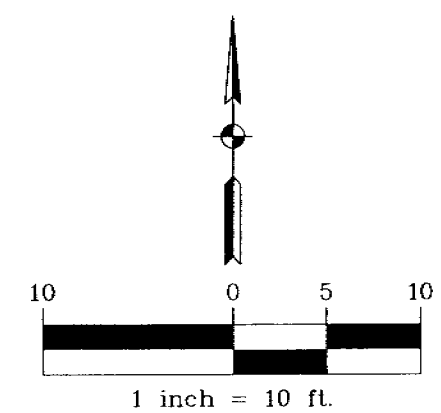

Given under my hand and seal 11/3/05

Benson G. Hinshaw
Registered Land Surveyor No. S-7909
State of Ohio

BENSON G. HINSHAW
REGISTERED
No.
S-7909
STATE OF
OHIO
LAND SURVEYOR

This survey was prepared by First Group Engineering, Inc., 5714 West 74th Street, Indianapolis, IN, using features located in the field and information supplied by the client. The boundary depicted herein was not necessarily created from a title report nor compared with adjoiners deeds.

SHEET 1 OF 2

SITE #3016597
DUBLIN FIRE DEPARTMENT
FRANKLIN COUNTY, DUBLIN, OHIO

SURVEY WORK PERFORMED BY:

FIRST GROUP ENGINEERING INC.
CONSULTING ENGINEERS
5714 W. 74TH STREET, INDIANAPOLIS, INDIANA
PH. (317) 290-9549 FAX (317) 290-9560

NATIONAL SURVEY SERVICES COORDINATION BY:

GEOLINE SURVEYING, INC.

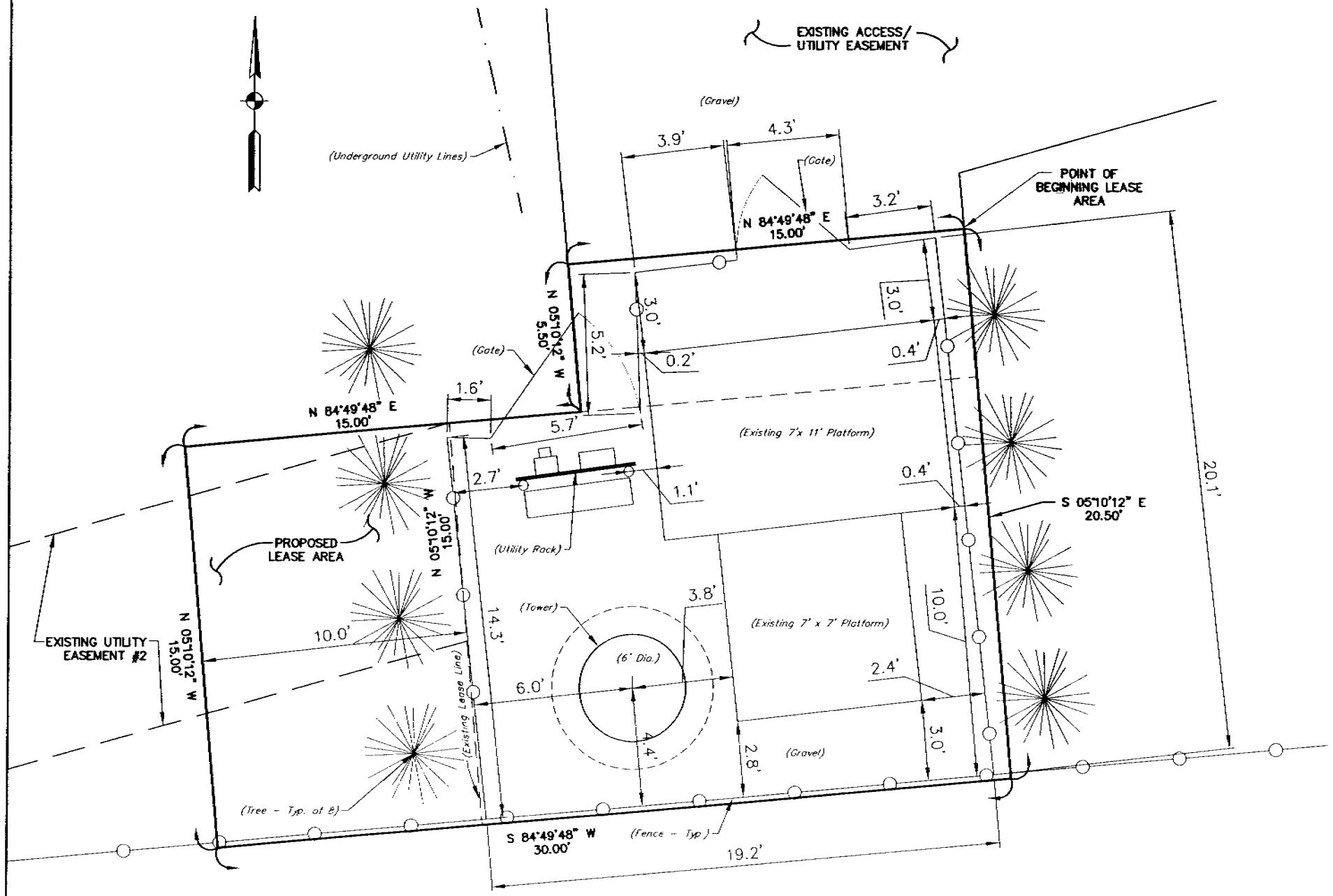

COMPOUND DETAIL
SCALE: 1" = 5'

SURVEYOR'S CERTIFICATION

I, Benson G. Hinshaw, do hereby certify to Global Signal Acquisitions II LLC.That this survey was made on the ground under my personal supervision and that this plat is a true, correct and accurate representation of the facts as found at the time of the survey, and more specifically, I so hereby certify that the survey conforms to the conditions and stipulations as checked (x) below.

(X) 1. The boundary lines and dimensions of the land indicated hereon and each individual parcel thereof indicated hereon is correct.

(X) 2. To the extent the land indicated hereon is part of a parent parcel, such land is located within the boundaries of the record title legal description of such parent parcel as described and reflected on the inset shown hereon.

( ) 3. Iron pipes are set at each property corner unless otherwise indicated hereon.

( ) 4. The distance from the nearest intersecting public street or road is as shown hereon.

( ) 5. Correctly shows the location and dimension of all alleys, streets, roads, rights-of-way, easement and other matters of record which the surveyor has been advised affects the subject property (each has been identified by instrument volume and page number if available).

( ) 6. Except as shown, there are no visible easements, rights-of way, party walls or conflicts; further, this survey is not subject to any easements or rights-of-way not visible on the ground.

( ) 7. The location of all buildings, structures and other improvements of visible items, if shown, are as indicated hereon.

( ) 8. Except as shown, there are no visible protrusions on adjoining premises, streets or alleys by any building, structure or other improvements situated on the subject property.

( ) 9. Except as shown, there are no visible encroachments onto the subject property by any building, structure or other improvements situated on adjoining premises.

(X) 10. Correctly shows the location and acres contained in all portions of the subject property which are located in an area designated as a "FLOOD PRONE AREA (ZONE A)" as defined by the U.S. Department of Housing and Urban Development pursuant to the Flood Disaster Act of 1973; NONE, FIRM Community Panel No.

(X) 11. Correctly describes and shows the location of all public streets and roads visibly providing access to and from the subject property, and correctly sets forth the municipal address of the subject property.

( ) 12. Correctly depicts the latitudinal and longitudinal coordinates of the tower(s) location(s), to the nearest tenth of a second, the elevation above mean sea level of the base and tip of each tower, plus or minus 20 feet, the elevation of the tip of each tower as measured from ground level, and additionally, the elevation of the tip of the highest appurtenance on the tower as measured from ground level, if such appurtenance is higher in elevation than the highest point of the tower structure itself, to the nearest foot, on the survey drawing and on a separate 81/2 x11 certified letterhead.

( ) 13. Survey meets or exceeds the minimum technical standards for Land Boundary surveys set forth by _____ State Law.

( ) 14. The subject property is currently zoned _____.

(X) 15. If the survey is developed electronically (CAD File), such file has been provided to: Geoline Surveying, Inc.

Proposed Legal description – Lease Area

A part of the Village of Dublin, in Virginia Military Survey No. 3009, Franklin County, Ohio, described as follows: Commencing at the intersection of the centerline of Brand Road with the centerline of Avery Road; thence South 16 degrees 32 minutes 28 seconds East 285.19 feet along the centerline of said Avery Road to the northeast corner of the owner's land; thence South 81 degrees 10 minutes 00 seconds West 30.01 feet along the north line of the owner's land to the western boundary of said Avery Road; thence South 16 degrees 32 minutes 28 seconds East 352.23 feet along the boundary of said Avery Road; thence South 74 degrees 01 minute 59 seconds West 254.36 feet; thence Northwesterly 56.16 feet along an arc to the right and having a radius of 40.00 feet and subtended by a long chord having a bearing of North 65 degrees 44 minutes 33 seconds West and a length of 51.66 feet; thence Northwesterly 68.46 feet along an arc to the left and having a radius of 49.00 feet and subtended by a long chord having a bearing of North 65 degrees 33 minutes 17 seconds West and a length of 63.02 feet; thence South 74 degrees 25 minutes 18 seconds West 385.23 feet; thence South 5 degrees 10 minutes 12 seconds East 2.06 feet to the point of beginning of this description; thence continuing South 5 degrees 10 minutes 12 seconds East 20.50 feet; thence South 84 degrees 49 minutes 48 seconds West 30.00 feet; thence North 5 degrees 10 minutes 12 seconds West 15.00 feet; thence North 84 degrees 49 minutes 48 seconds East 15.00 feet; thence North 5 degrees 10 minutes 12 seconds West 5.50 feet; thence North 84 degrees 49 minutes 48 seconds East 15.00 feet to the point of beginning and containing 533 square feet, more or less.

Given under my hand and seal 12/16/05

Benson G Hinshaw
Registered Land Surveyor No. S-7909
State of Ohio

BENSON G. HINSHAW
REGISTERED
No.
S-7909
STATE OF
OHIO
LAND SURVEYOR

This survey was prepared by First Group Engineering, Inc., 5714 West 74th Street, Indianapolis, IN, using features located in the field and information supplied by the client. The boundary depicted herein was not necessarily created from a title report nor compared with adjoiners deeds.

SHEET 2 OF 2

SITE #3016597
DUBLIN FIRE DEPARTMENT
FRANKLIN COUNTY, DUBLIN, OHIO

SURVEY WORK PERFORMED BY:

FIRST GROUP ENGINEERING INC.
CONSULTING ENGINEERS
5714 W. 74TH STREET, INDIANAPOLIS, INDIANA
PH. (317) 290-9549 FAX (317) 290-9560

NATIONAL SURVEY SERVICES COORDINATION BY:

GEOLINE SURVEYING, INC.

Sprint

SITE NO. CB03XC053A
AVERY ROAD PARK

80 FT. HIGH MONOPOLE TOWER

MINI-BTS CELL SITE ON AN ELEVATED STEEL PLATFORM

VICINITY MAP — NO SCALE

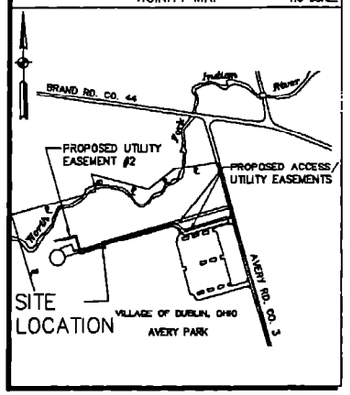

PROJECT DESCRIPTION:
CONSTRUCT A NEW, NON-INHABITABLE EQUIPMENT PCS WIRELESS BASE STATION WHICH INCLUDES:
1. INSTALLING A NEW 80' HIGH MONOPOLE TOWER
2. PROVIDING AN ELEVATED STEEL PLATFORM FOR CABINETRY.
3. PROVIDING FOR NEW 200 AMP ELECTRICAL SERVICE.

PROJECT SUMMARY

SITE NAME :	AVERY ROAD PARK
SITE NUMBER :	CB03XC053A
SITE ADDRESS :	7697 AVERY ROAD DUBLIN, OH 43016 FRANKLIN COUNTY
OWNER:	VILLAGE OF DUBLIN
APPLICANT :	SPRINT PCS 2586 TILLER LANE COLUMBUS, OH 43231
JURISDICTION:	FRANKLIN COUNTY
TAX IDENTIFICATION:	
CURRENT ZONING:	NONE
LEASING AREA:	300 SQUARE FEET

HANDICAP REQUIREMENTS:
FACILITY WILL BE UNMANNED AND IS NOT DESIGNED FOR HUMAN HABITATION. HANDICAPPED ACCESS REQUIREMENTS DO NOT APPLY.

PLUMBING REQUIREMENTS:
FACILITY HAS NO PLUMBING.

SHEET INDEX

T1	TITLE SHEET
C1	SITE PLAN AND ACCESS DETAILS
C2	COMPOUND LAYOUT AND DETAILS

UTILITIES:
ELECTRIC: LOCAL UTILITY COMPANY
TELEPHONE: AMERITECH

IT IS RECOMMENDED THAT THE CONTRACTOR NOTIFY OHIO UNDERGROUND (1-800-362-2764) 72 HOURS IN ADVANCE OF CONSTRUCTION, FOR THE EXACT LOCATION OF EXISTING UTILITIES

FIRST GROUP ENGINEERING INC.
CONSULTING ENGINEERS
6714 W. 74TH STREET, INDIANAPOLIS, INDIANA
PH. (317) 290-9549 FAX (317) 290-9560

AVERY ROAD PARK
7697 AVERY ROAD
DUBLIN, OH 43016
FRANKLIN COUNTY

Sprint PCS
2586 TILLER LANE
COLUMBUS, OHIO 43231
CONSTRUCTION DRAWING FOR
SITE NO. CB03XC053A

NO.	DATE	REVISIONS	BY	CHK	APP'D
2	2/17/98	ADDED UTILITY EASEMENT #2	WBB	LAM	LCS
1	8/26/97	ACCESS EASEMENT ON VICINITY MAP	DFS	DMC	LCS

DATE: 8/7/97 CHECKED BY: L.A.M. DRAWN BY: D.F.S.

Sprint PCS
TITLE SHEET

SITE NUMBER	DRAWING NUMBER	REV
CB03XC053A	T1	

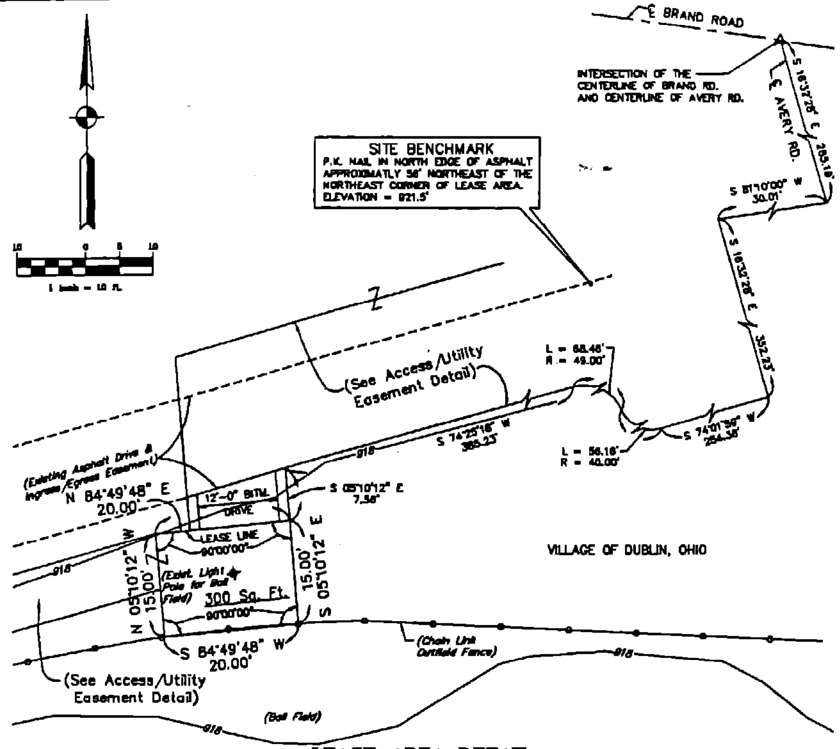

LEASE AREA DETAIL

RESIDENTIAL ZONING

Legal description – Lease Area

A part of the Village of Dublin, in Virginia Military Survey No. 3009, Franklin County, Ohio, described as follows: Commencing at the intersection of the centerline of Brand Road with the centerline of Avery Road; thence South 16 degrees 32 minutes 28 seconds East 285.19 feet along the centerline of said Avery Road to the northeast corner of the owner's land; thence South 81 degrees 10 minutes 00 seconds West 30.01 feet along the north line of the owner's land to the western boundary of said Avery Road; thence South 16 degrees 32 minutes 28 seconds East 352.23 feet along the boundary of said Avery Road; thence South 74 degrees 01 minute 59 seconds West 254.36 feet; thence Northwesterly 56.16 feet along an arc to the right and having a radius of 40.00 feet and subtended by a long chord having a bearing of North 65 degrees 44 minutes 33 seconds West and a length of 51.66 feet; thence Northwesterly 68.46 feet along an arc to the left and having a radius of 49.00 feet and subtended by a long chord having a bearing of North 65 degrees 33 minutes 17 seconds West and a length of 63.02 feet; thence South 74 degrees 25 minutes 18 seconds West 385.23 feet; thence South 5 degrees 10 minutes 12 seconds East 7.56 feet to the point of beginning of this description: thence continuing South 5 degrees 10 minutes 12 seconds East 15.00 feet; thence South 84 degrees 49 minutes 48 seconds West 20.00 feet; thence North 5 degrees 10 minutes 12 seconds West 15.00 feet; thence North 84 degrees 49 minutes 48 seconds East 20.00 feet to the point of beginning and containing 300 square feet, more or less.

Legal description – Access/Utility Easement

A part of the Village of Dublin, in Virginia Military Survey No. 3009, Franklin County, Ohio, described as follows: Commencing at the intersection of the centerline of Brand Road with the centerline of Avery Road; thence South 16 degrees 32 minutes 28 seconds East 285.19 feet along the centerline of said Avery Road to the northeast corner of the owner's land; thence South 81 degrees 10 minutes 00 seconds West 30.01 feet along the north line of the owner's land to the western boundary of said Avery Road; thence South 16 degrees 32 minutes 28 seconds East 318.94 feet along the boundary of said Avery Road to the point of beginning of this description: thence continuing South 16 degrees 32 minutes 28 seconds East 32.29 feet along said boundary; thence South 74 degrees 01 minute 59 seconds West 254.36 feet; thence Northwesterly 56.16 feet along an arc to the right and having a radius of 40.00 feet and subtended by a long chord having a bearing of North 65 degrees 44 minutes 33 seconds West and a length of 51.66 feet; thence Northwesterly 68.46 feet along an arc to the left and having a radius of 49.00 feet and subtended by a long chord having a bearing of North 65 degrees 33 minutes 17 seconds West and a length of 63.02 feet; thence South 74 degrees 25 minutes 18 seconds West 385.23 feet; thence South 5 degrees 10 minutes 12 seconds East 7.56 feet; thence South 84 degrees 49 minutes 48 seconds West 15.00 feet; thence North 5 degrees 10 minutes 12 West 25.14 feet; thence North 74 degrees 25 minutes 18 seconds East 396.81 feet; thence Southeasterly 74.32 feet along an arc to the right and having a radius of 69.00 feet and subtended by a long chord having a bearing of South 74 degrees 43 minutes 24 seconds East and a length of 70.78 feet; thence Southeasterly 26.41 feet along an arc to the left and having a radius of 93.00 feet and subtended by a long chord having a bearing of South 52 degrees 00 minutes 22 seconds East and a length of 28.32 feet; thence Southeasterly 10.40 feet along an arc to the left and having a radius of 13.00 feet and subtended by a long chord having a bearing of South 83 degrees 03 minutes 12 seconds East and a length of 10.12 feet; thence North 74 degrees 01 minute 59 seconds East 256.02 feet to the point of beginning and containing 19,028 square feet, more or less.

Subject to a 0.675-acre ingress and egress easement.

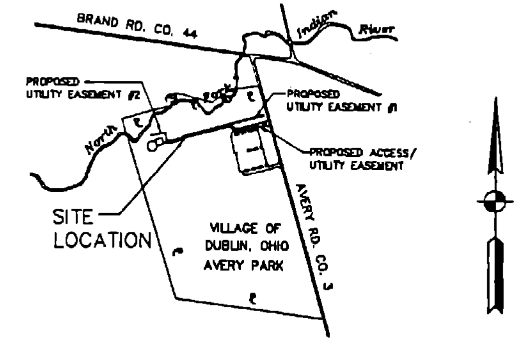

VICINITY MAP

1 inch = 400 ft.

Legal description – Utility Easement #1

A part of the Village of Dublin, in Virginia Military Survey No. 3009, Franklin County, Ohio, described as follows: Commencing at the intersection of the centerline of Brand Road with the centerline of Avery Road; thence South 16 degrees 32 minutes 28 seconds East 285.19 feet along the centerline of said Avery Road to the northeast corner of the owner's land; thence South 81 degrees 10 minutes 00 seconds West 30.01 feet along the north line of the owner's land to the western boundary of said Avery Road; thence South 16 degrees 32 minutes 28 seconds East 260.32 feet along the boundary of said Avery Road to the point of beginning of this description: thence continuing South 16 degrees 32 minutes 28 seconds East 10.00 feet along said boundary; thence South 74 degrees 25 minutes 19 seconds West 305.14 feet; thence Westerly 37.61 feet along an arc to the left and having a radius of 69.00 feet and subtended by a long chord having a bearing of North 89 degrees 57 minutes 47 seconds West and a length of 37.15 feet; thence North 74 degrees 25 minutes 18 seconds East 340.75 feet to the point of beginning and containing 3,186 square feet, more or less.

Legal description – Utility Easement #2

A part of the Village of Dublin, in Virginia Military Survey No. 3009, Franklin County, Ohio, described as follows: Commencing at the intersection of the centerline of Brand Road with the centerline of Avery Road; thence South 16 degrees 32 minutes 28 seconds East 285.19 feet along the centerline of said Avery Road to the northeast corner of the owner's land; thence South 81 degrees 10 minutes 00 seconds West 30.01 feet along the north line of the owner's land to the western boundary of said Avery Road; thence South 16 degrees 32 minutes 28 seconds East 260.32 feet along the boundary of said Avery Road; thence South 74 degrees 25 minutes 19 seconds West 737.56 feet; thence South 5 degrees 10 minutes 12 seconds East 25.14 feet; thence South 84 degrees 49 minutes 50 seconds West 5.00 feet to the point of beginning of this description: thence South 5 degrees 10 minutes 12 seconds East 8.13 feet; thence South 74 degrees 25 minutes 18 seconds West 135.11 feet; thence North 14 degrees 45 minutes 01 second West 100.60 feet; thence South 77 degrees 03 minutes 43 seconds West 121.50 feet; thence North 12 degrees 56 minutes 18 seconds West 8.00 feet; thence North 77 degrees 03 minutes 43 seconds East 129.25 feet; thence South 14 degrees 45 minutes 01 second East 100.24 feet; thence North 74 degrees 25 minutes 18 seconds East 128.46 feet to the point of beginning and containing 2,881 square feet, more or less.

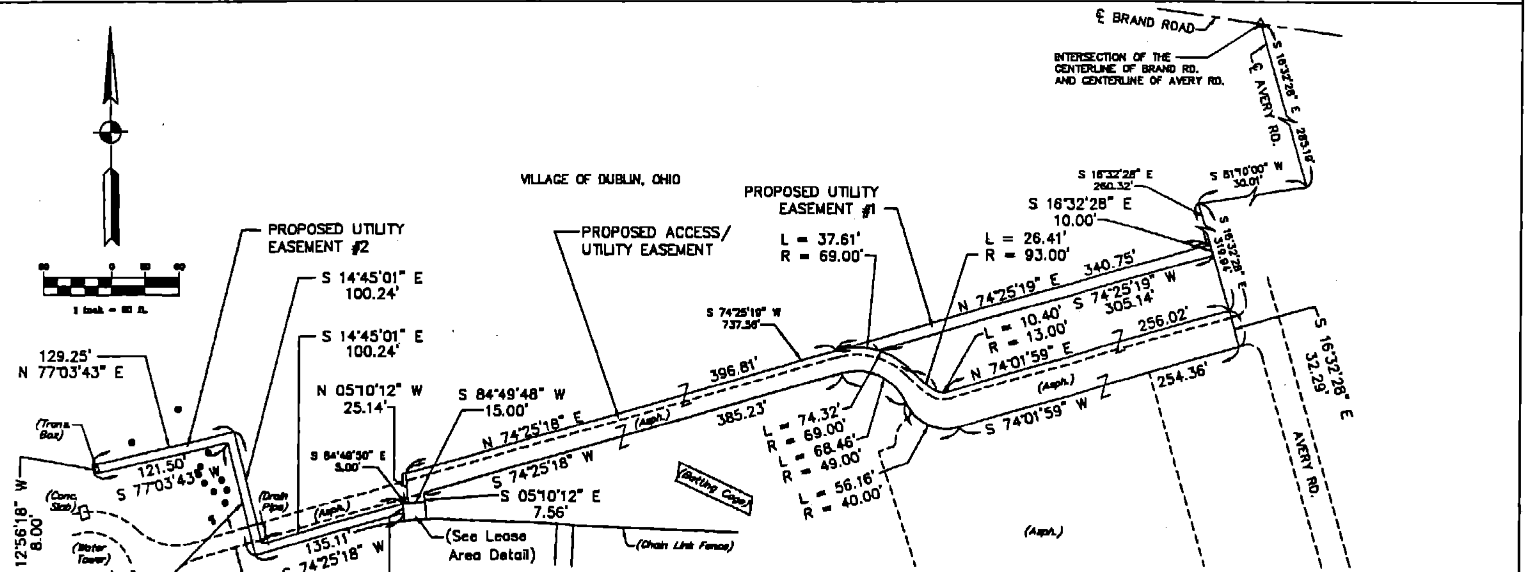

ACCESS/UTILITY EASEMENT DETAIL

Notes:

1. According to the reading taken with a GPS receiver and checked with the United States Department of the Interior Geological Survey Map, Shawnee Hills, Ohio the tower center is located North 40 degrees 07 minutes 41 seconds Latitude and West 83 degrees 09 minutes 43 seconds Longitude.
2. The elevations are referenced to the USC & GS datum.
3. In the unpaved areas, the 12 ft. wide access road shall be 2" of #53 stone over a 6" layer of 2" diameter stone (remove topsoil).
4. It is recommended that the contractor notify Ohio Underground (1-800-362-2764) 48 hours in advance of construction, for the exact location of existing utilities.
5. Boundary locations are approximate and based on the information provided by Sprint PCS. No comparisons were made with adjoiners deeds.
6. These drawings and descriptions were prepared without the benefit of complete abstracting or title work.
7. According to Flood Insurance Rate Map Number 39049C0018 G (Panel 18 of 387) dated August 2, 1995, the proposed lease area lies in Zone X.

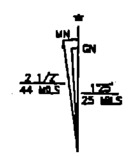

UTM GRID AND 1973 MAGNETIC NORTH (FROM USGS MAP, SHAWNEE HILLS, OH.)

FIRST GROUP ENGINEERING INC.
CONSULTING ENGINEERS
5714 W. 74TH STREET, INDIANAPOLIS, INDIANA
PH. (317) 290-9549 FAX (317) 290-9560

AVERY ROAD PARK
7697 AVERY ROAD
DUBLIN, OHIO 43016
FRANKLIN COUNTY

Sprint PCS
2585 TILLER LANE
COLUMBUS, OHIO 43231
CONSTRUCTION DRAWING FOR
SITE NO. CB03XC053A

NO.	DATE	REVISIONS	BY	CHK	APP'D
3	2/17/98	ADDED UTILITY EASEMENT #2	WBB	LAM	JWH
2	9/24/97	ADDED UTILITY EASEMENT	PM	LAM	JWH
1	8/26/97	CHANGED ACCESS EASEMENT	PM	MAN	JWH

DATE: 8/01/97 CHECKED BY: L.A.M. DRAWN BY: D.L.P.

STATE OF OHIO JOHN W. HAGAN 4968 REGISTERED SURVEYOR

Sprint PCS

SITE PLAN AND ACCESS DETAILS

SITE NUMBER	DRAWING NUMBER	REV
CB03XC053A	C1	

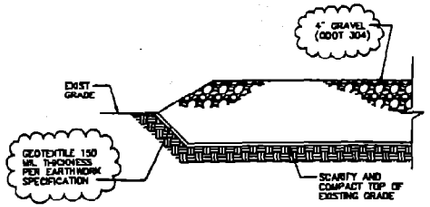

LEASE AREA GRAVEL SURFACING DETAIL (REV. 0)

218A/C2 DETAIL
SCALE: NONE

GROUNDING & ELECTRICAL LEGEND

- GROUND ROD WITH ACCESS
- XIT GROUND ROD
- GROUND ROD
- DISCONNECT SWITCH
- METER ON METER/BREAKER UNIT
- CIRCUIT BREAKER
- GENERATOR
- CADWELD TYPE CONNECTION
- COMPRESSION TYPE CONNECTION
- GROUNDING WIRE
- XX/XX — REPRESENTS DETAIL NUMBER / REF. DRAWING NUMBER

ABBREVIATIONS

AWG	AMERICAN WIRE GAUGE
BCW	BARE COPPER WIRE
GPS	GLOBAL POSITIONING SYSTEM
PCS	PERSONAL COMMUNICATION SYSTEM
PPC	POWER PROTECTION CABINET
PRC	PRIMARY RADIO CABINET
RWY	RACEWAY
TYP.	TYPICAL
RGS	RIGID GALVANIZED STEEL
EMT	ELECTRICAL METALLIC TUBING
DWG	DRAWING
IGR	INTERIOR GROUND RING (HALO)
ACCA	ANTENNA CABLE COVER ASSEMBLY
MGB	MASTER ISOLATED GROUND BAR
EMBCE	COAX ISOLATED GROUND BAR EXTERNAL
BTS	BASE TRANSMISSION SYSTEM
GEN	GENERATOR
GR	GROWTH
SSLP	SPRINT SPECTRUM LIMITED PARTNERSHIP

GROUNDING NOTES

1. THE ENTIRE GROUNDING INSTALLATION SHALL BE GROUNDED AS REQUIRED BY ALL APPLICABLE GOVERNING CODES.
2. CAUTION: AT ALL SITES THE CONTRACTOR MUST VERIFY THAT THE SYSTEM IS EFFECTIVELY GROUNDED AND MEETS THE NEC ARTICLE 250 REQUIREMENTS AND ACCEPTABLE TO THE LOCAL INSPECTOR/AUTHORITY. NEC ARTICLE 250-84 SPECIFIES GROUND RESISTANCE OF 25 OHMS OR LESS FOR THE GROUNDING SYSTEM. THE PROJECT REQUIREMENT IS FIVE (5) OHMS.
3. ALL LUGS SHALL BE 2-HOLE, LONG BARREL, TINNED SOLID COPPER UNLESS OTHERWISE SPECIFIED IN THIS DOCUMENT. LUGS SHALL BE THOMAS AND BETTS SERIES 54644BE OR EQUIVALENT.
4. THE APPROPRIATE CRIMPING TOOL SHALL BE USED FOR LUG CRIMPING. THIS TOOL SHALL BE THE SAME MANUFACTURER AS THE LUG.
5. THE ANTIOXIDATION COMPOUND SHALL BE THOMAS AND BETTS KOPR-SHIELD (TM OF JET LUBE INC.) THERE IS NO EQUIVALENT FOR THIS PRODUCT; NO OTHER COMPOUND WILL BE ACCEPTED. COAT ALL WIRES BEFORE LUGGING. COAT ALL SURFACES BEFORE CONNECTING. THIS PRODUCT IS AVAILABLE IN SMALL CONTAINERS WITH A BRUSH ATTACHED TO THE LID FOR EASY APPLICATION.

GENERAL CONSTRUCTION NOTES

1. CONTRACTOR SHALL VISIT THE JOB SITE AND SHALL BECOME FAMILIAR WITH ALL CONDITIONS AFFECTING THE PROPOSED WORK AND SHALL MAKE PROVISIONS AS TO THE COST THEREOF. CONTRACTOR SHALL BE RESPONSIBLE FOR BEING FAMILIAR WITH ALL CONTRACT DOCUMENTS, FIELD CONDITIONS AND DIMENSIONS AND CONFIRMING THAT THE WORK MAY BE ACCOMPLISHED AS SHOWN PRIOR TO PROCEEDING WITH CONSTRUCTION. ANY DISCREPANCIES SHALL BE BROUGHT TO THE ATTENTION OF THE CONSTRUCTION REPRESENTATIVE PRIOR TO THE COMMENCEMENT OF WORK.
2. PLANS ARE NOT TO BE SCALED. THESE PLANS ARE INTENDED TO BE A DIAGRAMMATIC OUTLINE ONLY UNLESS OTHERWISE NOTED. THE WORK SHALL INCLUDE FURNISHING MATERIALS, EQUIPMENT AND APPURTENANCES, AND LABOR NECESSARY ASSOCIATED WITH THE INSTALLATIONS AS INDICATED ON THE DRAWINGS.
3. DETAILS ARE INTENDED TO SHOW END RESULTS OF CONSTRUCTION. MINOR MODIFICATIONS MAY BE REQUIRED TO SUIT JOB DIMENSIONS OR CONDITIONS, AND SUCH MODIFICATIONS SHALL BE INCLUDED AS PART OF THE WORK.
4. CONTRACTOR SHALL NOTIFY THE CONSTRUCTION REPRESENTATIVE OF ALL ITEMS NOTED AS "EXISTING" WHICH ARE NOT FOUND IN THE FIELD.
5. INSTALL ALL EQUIPMENT AND MATERIALS IN ACCORDANCE WITH MANUFACTURER'S RECOMMENDATIONS.
6. CONTRACTOR SHALL VERIFY ALL DIMENSIONS AND CONDITIONS IN THE FIELD PRIOR TO FABRICATION AND ERECTION OF ANY MATERIAL. ANY UNUSUAL CONDITIONS SHALL BE REPORTED TO THE CONSTRUCTION REPRESENTATIVE.
7. CONTRACTOR SHALL FIELD VERIFY LOCATIONS OF EXISTING UNDERGROUND UTILITIES PRIOR TO ANY EXCAVATION WORK.
8. ALL MATERIALS SHALL BE FURNISHED AND WORK SHALL BE PERFORMED IN ACCORDANCE WITH CURRENT SPRINT PCS "TECHNICAL SPECIFICATION FOR CONSTRUCTION". IN CASE OF CONFLICT BETWEEN THE CONSTRUCTION SPECIFICATIONS AND THE DRAWINGS THE SPECIFICATIONS SHALL APPLY.

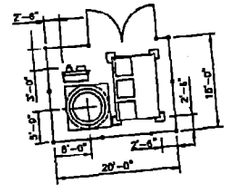

SITE DIMENSIONS

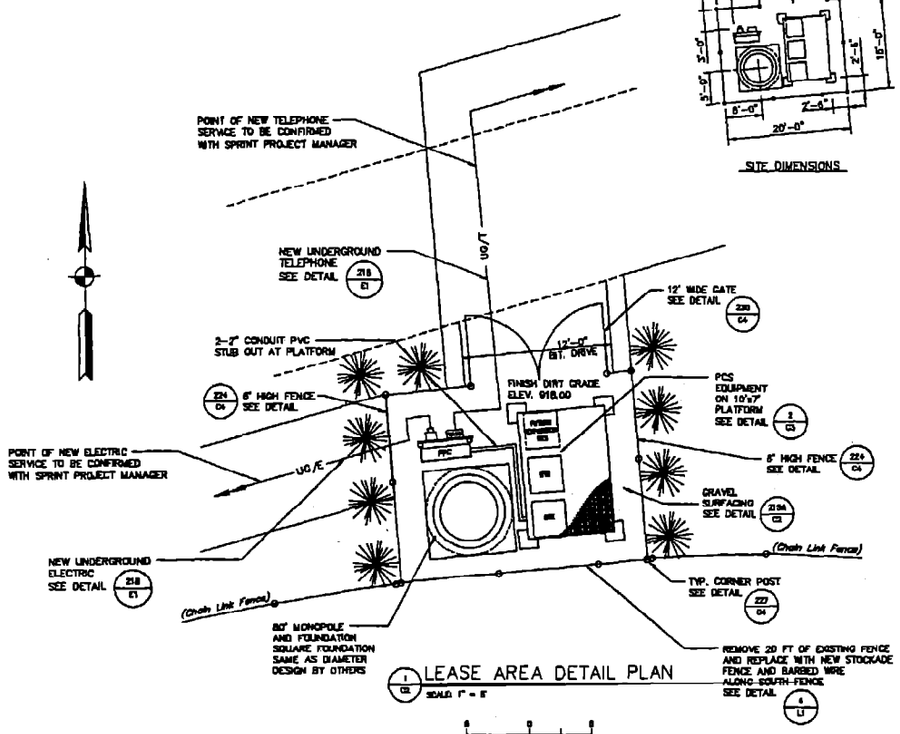

1/C2 LEASE AREA DETAIL PLAN
SCALE: 1" = 8'

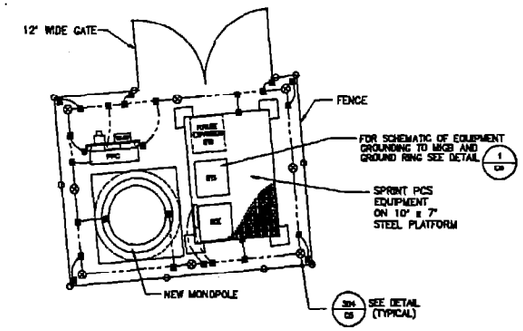

NOTES:
SEE SHEET C5 FOR ADDITIONAL GROUNDING DETAILS

ALL OUTSIDE CADWELD TO BE GALVANIZED SPRAYED

1/C2 GROUNDING PLAN
SCALE: NONE

NORTH

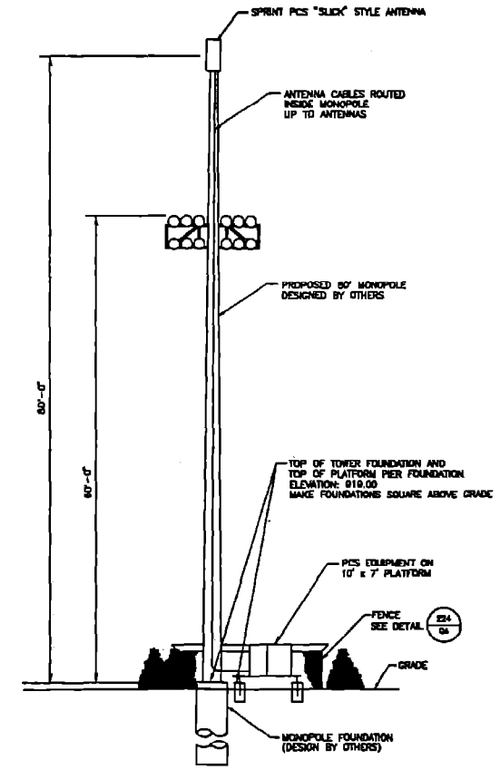

3/C2 SITE ELEVATION
SCALE: NONE

FIRST GROUP ENGINEERING INC.
CONSULTING ENGINEERS
5714 W. 74TH STREET, INDIANAPOLIS, INDIANA
PH. (317) 290-9649 FAX (317) 290-9660

AVERY ROAD PARK
7697 AVERY ROAD
DUBLIN, OH 43016
FRANKLIN COUNTY

Sprint PCS
2586 TILLER LANE
COLUMBUS, OHIO 43231
CONSTRUCTION DRAWING FOR
SITE NO. CB03XC053A

NO.	DATE	REVISIONS	BY	CHK	APP'D
2	2/17/98	ADDED UTILITY EASEMENT #2	WRB	LAM	LCS
1	11/10/97	ADD LIGHTS TO MONOPOLE	WRB	LAM	LCS

DATE: 10/24/97 CHECKED BY: L.A.M. DRAWN BY: D.F.S.

LAWRENCE C. SUNDE — REGISTERED — No. 61412 — PROFESSIONAL ENGINEER — STATE OF OHIO

Sprint PCS
COMPOUND LAYOUT & GROUNDING PLAN

SITE NUMBER	DRAWING NUMBER	REV
CB03XC053A	C2	

FIRST AMENDMENT TO
TOWER SITE NON-EXCLUSIVE LEASE AGREEMENT
SCIOTO PARK

This First Amendment to Tower Site Lease Agreement ("First Amendment") is made and entered into as of the 17th day of September, 2010, by and between STC Two LLC, a Delaware Limited Liability Company ("Tenant"), by and through Global Signal Acquisitions III LLC (a wholly-owned indirect subsidiary of Crown Castle International Corp.), a Delaware L imited Liability Company, its Attorney In Fact ("GSA III") and The City of Dublin, an Ohio municipal corporation ("Landlord") and modifies that certain Tower Site Non-Exclusive Lease Agreement, including its attachments and exhibits, between the Parties dated November 16, 1998, (the "Original Agreement") and modifies that certain Agreement Regarding Ground Lease ("ARG Agreement") between the Parties, including its attachments and exhibits, dated January 12, 2006 (all appended hereto as "Exhibit A" and incorporated herein by this reference). Collectively, the Original Agreement, ARG Agreement, and this First Amendment shall constitute the "Agreement." The term "Parties," as used herein, shall mean Tenant and Landlord together.

RECITALS

A. WHEREAS, Pursuant to the Original Agreement, Tenant leases from Landlord a portion of certain real property owned by Landlord (the "Leased Premises or the "Property"), legally described on "Exhibit B" appended hereto and incorporated herein by this reference ; and

B. WHEREAS, the Original Agreement was authorized by the Dublin City Council on September 21, 1998, in Ordinance No.103-98.

C. WHEREAS, Landlord and Tenant have continued to faithfully and diligently perform their respective obligations and duties over time and in accordance with the Original Agreement and ARG Agreement.

D. WHEREAS, Pursuant to an agreement dated May 26, 2005, Sprintcom, Inc. assigned, conveyed, and transferred its entire interest in the Original Agreement to Tenant, and Tenant subleased its interest to Global Signal Acquisitions II LLC, a Delaware limited liability company ("GSA II") (the "GSA II Sublease"), which assignment, conveyance, and transfer, was consented to by Landlord on January 12, 2006, in the ARG Agreement.

E. WHEREAS, Pursuant to agreements dated January 27, 2006, Tenant terminated the GSA II Sublease with respect to the Leased Premises, and subleased its interest to GSA III (the "GSA III Sublease").

By: (Initials) CS Date 10/19/10 Doc Type I
BUN: 875268 Lease/Lic 153903

F. WHEREAS, in exchange for the consideration proposed herein and based upon the terms and conditions of this First Amendment, the Parties desire to amend the Original Agreement and ARG Agreement to acknowledge and accept the GSA III Sublease, provide for the collocation of the communications facility of Clearwire, Inc. ("Clearwire"), and to provide for additional rights and responsibilities, as further defined herein; and

OPERATIVE PROVISIONS

NOW THEREFORE, in consideration of the mutual covenants and conditions contained herein and for other good and valuable consideration, the receipt and sufficiency which is hereby acknowledged, the Parties hereby agree as follows:

1. Confirmation of Terms. The Background recitals herein above are true and correct and are incorporated herein by this reference.

2. Mutual Ratification of Agreement. The Landlord and Tenant hereby acknowledge, ratify, and confirm, each Party's interest in and to the Agreement, that the Agreement is in full force and effect, that there are no known defaults pursuant to the terms of the Agreement, and that each has full right and authority to execute this instrument. To the extent this First Amendment conflicts with the terms of the Original Agreement or the ARG Agreement, the terms of this First Amendment shall prevail.

3. Restatement. The terms and provisions of the Original Agreement and ARG Agreement are hereby restated and incorporated herein by this reference, amended only as more particularly described hereinafter.

4. Property. The Parties agree and acknowledge that Landlord owns the Property, as more fully described on the appended Exhibit B.

5. Acknowledgement of Status of the Parties. . The Parties agree and acknowledge that:

    a. STC Two LLC is the current "Tenant" under the Agreement, by virtue of the assignment of interest through an Assignment and Assumption Agreement dated May 26, 2005, from its affiliate Sprintcom, Inc. ("Sprintcom").

    b. Tenant and Sprintcom are each wholly-owned indirect subsidiaries of Sprint Nextel Corp., a Kansas corporation.

    c. By the agreements identified in Recital E above, GSA III is the current sublessee of Tenant's entire interest in the Leased Premises. The Parties hereby agree that the ARG Agreement is hereby amended to substitute GSA III for GSA II as appropriate therein.

d. By the agreements identified in Recital E above, GSA III is the duly appointed agent and attorney-in-fact for Tenant, with the authority to communicate with Landlord regarding the Agreement, to pay all rents due on Tenant's behalf, and to enter into amendments and other agreements concerning the Agreement on Tenant's behalf.

e. As recognized by the ARG Agreement, Sprintcom is a sub-subtenant of GSA III operating its wireless communications equipment upon the Leased Premises.

f. Effective January 11, 2007, Global Signal Inc., the former ultimate corporate parent of GSA III, merged into a subsidiary of Crown Castle International Corp. ("CCIC"), such that GSA III became a wholly-owned indirect subsidiary of CCIC.

6. Collocation. Landlord hereby acknowledges and consents to the installation, construction, operation and maintenance of an antenna tower, utility lines, equipment shelters, receivers, generators, and other equipment and apparatuses necessary for the collocation of Clearwire on a portion of the Property, limited to and exactly as described in "Exhibit C" appended hereto and incorporated herein by this reference ("Clearwire Communications Facility").

   a. Tenant shall make any necessary arrangements for the collocation and sharing of the Property by Tenant and Clearwire and shall also arrange for any necessary services required for collocation, access utilities, and use of the Property by Clearwire in compliance with and as may be required under the Agreement.

   b. Tenant agrees that is shall not permit the installation, construction, maintenance, operation, repairing, altering, inspecting, or replacing of any Communications Facility equipment except as exactly described in Exhibit A of the Original Agreement and Exhibit C. In addition, Tenant agrees that it will not permit an entity, other than Tenant or Clearwire to collocate on the Property without the prior express written consent of Landlord.

7. Conduct of Tenant and [redacted] Tenant agrees that it will inform [redacted] of the terms and conditions of this Agreement to which they will need to comply and Tenant also agrees that it will be responsible and liable for such compliance. If Tenant and/or [redacted] fail to comply with any applicable provision of this Agreement, the Default provisions of paragraph number eleven (11) of the Original Agreement shall apply and the Tenant shall be responsible and liable for any such Default.

8. Indemnification. Tenant agrees to indemnify, protect, defend and save Landlord, its elected officials, officers, employees, agents, or volunteers harmless from all

claims (including costs and expense of defending against such claims) for any breach of this Agreement, negligent act, negligent omission, or intentional tort jointly or severally by Clearwire, or its agents, employees, contractors, invitees, and licensees. Such indemnification shall not be construed as limiting Tenant's responsibility and liability under paragraph number ten (10) of the Original Agreement for its breach of this Agreement, negligent act, negligent omission, or intentional tort.

9. Legal/Technical Fees. Tenant agrees that it will compensate Landlord for the costs associated with Landlord's use of preferred legal and/or other technical service firms in providing assistance to Landlord in reviewing and negotiating the terms of this First Amendment. Therefore, in consideration of such, Tenant shall, within thirty (30) days of the Effective Date of this First Amendment, provide Landlord with a one-time payment in the amount of [redacted]

10. Taxes. Tenant agrees that for any tax or assessment, real or personal, that it is responsible for under Section twelve (12) of the Original Agreement, Tenant will arrange so that it is separately billed for such taxes and assessments and that it will arrange to pay, prior to the due date, amounts due for such taxes and assessments directly to the appropriate taxing or assessing authority. In the event that Tenant fails to pay such taxes and assessments and Landlord pays such taxes and assessments, Tenant will reimburse Landlord for such payments, including any interest, surcharges, penalties, and its reasonable attorney fees incurred in paying such taxes and assessments.

11. Capitalization of Terms. All capitalized terms not defined herein shall have the meanings given such terms in the Agreement. Except as explicitly amended hereby, the Agreement remains in full force and effect and is hereby restated, ratified and confirmed in accordance with its original terms, as amended hereby.

12. Indemnity and Insurance. The Parties hereby agree and acknowledge that Clearwire shall adhere to the requirements of the Original Agreement as to Liability and Indemnity (Section nine [9]) and Insurance (Section thirteen [13]) as it pertains to Tenant.

13. Notices. The Parties hereby agree and acknowledge that all Notices provided pursuant to Section eight (8) of the Original Agreement shall also be sent to the following address:

If to Landlord: City of Dublin
5200 Emerald Parkway
Dublin, Ohio 43016
Attention: City Manager

With copy to: Stephen J. Smith, Law Director
Schottenstein, Zox and Dunn, Co, LPA
250 West Street
Columbus, Ohio 43215

If to Tenant: STC Two LLC
c/o Crown Castle USA Inc.
E. Blake Hawk, General Counsel
2000 Corporate Drive
Canonsburg, PA 15317
Attn: Legal Department
Phone: (724) 416-2000
Fax: (724) 416-2353

14. Miscellaneous. All capitalized terms not defined herein shall have the meanings given such terms in the Agreement. Except as explicitly amended hereby, the Agreement remains in full force and effect and is hereby restated, ratified and confirmed in accordance with its original terms, as amended hereby.

SIGNATURE PAGES TO IMMEDIATELY FOLLOW

REST OF PAGE INTENTIONALLY LEFT BLANK

IN WITNESS WHEREOF, the parties hereto have executed this First Amendment as of the day and year first above written.

TENANT:
STC Two LLC, a Delaware limited liability company

By: Global Signal Acquisitions III LLC, a Delaware limited liability company, Its Attorney-in-Fact

By: Kevin Conroy
Name: KEVIN CONROY
As Its: PROPERTY MANAGER
[Seal]

STATE OF Pennsylvania
COUNTY OF Washington

I, a Notary Public of the County and State aforesaid, certify that KEVIN CONROY personally appeared before me this day and acknowledged that he is the PROPERTY MANAGER of GLOBAL SIGNAL and is personally known to me or produced _____ as identification, and who acknowledged the execution of the foregoing instrument.

WITNESS my hand and official seal this 16 day of September, 2010

Nancy J Russell
Notary Public – State of Pennsylvania
Printed Name: NANCY J. RUSSELL
My Commission Expires: 12/20/2010

COMMONWEALTH OF PENNSYLVANIA
Notarial Seal
Nancy J. Russell, Notary Public
Cecil Twp., Washington County
My Commission Expires Dec. 20, 2010
Member, Pennsylvania Association of Notaries

LANDLORD:
The City of Dublin

By: Marsha I. Grigsby
Its: Interim City Manager

STATE OF Ohio
COUNTY OF Franklin

I, a Notary Public of the County and State aforesaid, certify that Marsha I. Grigsby the Interim City Manager of the City of Dublin personally appeared before me this day and is personally known to me or produced Self as identification, and who acknowledged the execution of the foregoing instrument.

WITNESS my hand and official seal this 17th day of September, 2010

Judith Anne Grosz
Notary Public – State of Ohio
Printed Name: Judith Anne Grosz
My Commission Expires: 4.25.11

~~Approved as~~ to form:

City of Dublin Law Director

Exhibit A

Original Agreement & ARG Agreement

Recording requested by
and when recorded
return to:

Global Signal Inc.
301 North Cattleman Road
Suite 300
Sarasota, FL 34232
Attn: General Counsel

AGREEMENT REGARDING GROUND LEASE

THIS AGREEMENT REGARDING GROUND LEASE (this "Agreement") is made as of Jan 12, 2006 ~~2005~~; between the party identified as "Landlord" on the signature page hereof and SPRINTCOM, INC., a Kansas corporation ("Tenant").

RECITALS:

A. Landlord and Tenant are now parties to that certain TOWER SITE NON-EXCLUSIVE LEASE AGREEMENT dated November 16, 1998, a copy of which is annexed hereto as Exhibit A (the "**Lease**"), covering certain real property more particularly described on Exhibit A attached hereto (the "**Property**");

B. Pursuant to an agreement dated February 14, 2005 by and among Tenant, certain subsidiaries of Tenant and Global Signal, Inc., the Lease and the property related thereto (the "**Premises**") will be assigned to an affiliate of Tenant ("**Tenant Affiliate**"); and, after such assignment, the references to Tenant herein shall apply to Tenant Affiliate;

C. Pursuant to a sublease (the "**Sublease**"), Tenant Affiliate will sublease its entire interest in the Lease to an affiliate of Global Signal ("**Subtenant**") in exchange for certain prepaid consideration and Subtenant will then leaseback to Tenant (and/or one or more of its affiliates) the portion of the leased premises on which Tenant's telecommunications equipment is currently located in exchange for certain ongoing payments (collectively, the "**Lease and Lease Back Transactions**");

D. Certain lenders (each, together with their successors and assigns, a "**Lender**") may make a loan to Subtenant or certain of its affiliates secured by a mortgage or other security instrument encumbering Subtenant's interest in the Sublease; and

For good and valuable consideration, the receipt and sufficiency of which are hereby acknowledged, the parties hereby agree as follows:

1. Consent. To the extent any such consent is required by the Lease, Landlord hereby consents (a) to the assignment of the Lease from the original tenant under the Lease (an affiliate of Tenant) to Tenant (b) to the acquisition by Tenant Affiliate (or any affiliate thereof), directly or indirectly, of Tenant's interest in the Lease, (c) to the Sublease (and the recording of a memorandum of the Sublease) and (d) to the Lease and Lease Back Transaction.

2. Estoppel Certificate. Landlord certifies that (and Lender may rely on such representations) the following statements are true as of the date hereof:

(a) Tenant is the current tenant under the Lease (a full copy of which, including all amendments thereto, is annexed as Exhibit A), and the Lease is in full force and effect and contains the entire agreement between Landlord and Tenant with respect to the Property. Landlord is either the owner of the fee simple interest in the Property or the holder of a valid leasehold interest in the property and the person or entity signing on behalf of Landlord is authorized to do so and no other person or entity's signature is required to bind Landlord.

(b) To the best of Landlord's knowledge, no default exists under the Lease on the part of Tenant, and, to Landlord's knowledge, no event or condition has occurred or exists which, with notice or the passage of time or both, would constitute a default by Tenant under the Lease.

(c) No payments to Landlord are required under the Lease for the Lease and Lease Back Transactions or otherwise in connection with the above consents.

3. Agreement with Respect to the Lease and Sublease. Landlord hereby agrees with respect to the Lease as follows:

(a) Lender and Subtenant shall have all of the rights of Tenant under the Lease, including the right to exercise any renewal option(s) or purchase option(s) set forth in the Lease, and shall have the right to assign the Sublease subject to Landlord's consent, which shall not be unreasonably withheld, conditioned, or delayed.

(b) Landlord shall deliver to any Lender and Subtenant (in each case at such address as shall be designated in writing to Landlord) a copy of any default notice given by Landlord to Tenant under the Lease. No default notice from Landlord to Tenant shall be deemed effective as against any Lender or Subtenant unless delivered in person or mailed by certified, registered, or express mail.

(c) If Tenant defaults on any monetary obligations under the Lease, Landlord shall accept a cure thereof by any Lender or Subtenant within thirty (30) days after delivery of notice of such defaults. For non-monetary defaults, Landlord shall accept a cure thereof by any Lender or Subtenant within thirty (30) days after delivery of notice of such defaults. If the non-monetary default may not reasonably be cured within a 30 day period, the Lease may not be terminated if Lender or Subtenant commences action to cure the default within such 30 day period and proceeds with due diligence to fully cure the default. In no event shall Landlord be required to accept a cure from Lender or Subtenant beyond sixty (60) days after delivery of notice of such defaults.

(d) Landlord acknowledges Tenant or Tenant Affiliate may not terminate, surrender or cancel the Lease except as provided in the Lease and may not amend the Lease in a manner that materially increases the liability or obligations of Tenant or Tenant Affiliate or decreases the rights of Tenant or Tenant Affiliate without the prior written consent of Lender.

(e) If the Lease is terminated by Landlord for any reason, or otherwise rejected in bankruptcy, Landlord will, subject to applicable law, enter into a new lease with either Lender or Subtenant on the same terms as the Lease, provided that all past due amounts under the Lease are paid to Landlord within 30 days of notice to Lender and Subtenant of such termination; however, Landlord will not be required to enter into a new lease if Landlord terminates the Lease as a result of Tenant ' s default.

4. Memorandum of Lease. To the extent the Lease or a memorandum thereof has not previously been recorded, this Agreement shall constitute a "memorandum of lease" under applicable State law and may be recorded in the applicable public records, the provisions of the Lease (with certain financial terms redacted therefrom) being as set forth on Exhibit A annexed hereto and made a part hereof.

5. Notices. All notices sent to any Lender or Subtenant shall be in writing and sent by United States mail postage prepaid or other reputable courier service at the following address: c/o Global Signal Inc., 301 North Cattleman Road, Suite 300, Sarasota, FL 34232, Attn: General Counsel; or to such other address as Lender or Subtenant shall have notified Landlord in writing.

6. Miscellaneous.

(a) If this Agreement is inconsistent with the Lease, this Agreement shall control.

(b) This Agreement shall be binding upon Landlord and its successors and shall benefit each of Lender and Subtenant and their respective successors and assigns.

(c) This Agreement may not be amended or modified except by a written agreement executed by Landlord, any Lender and Subtenant. This Agreement may be executed in any number of separate counterparts and all signatures need not be on the same counterpart.

(d) Notwithstanding anything to the contrary in this Agreement, the provisions regarding Assignment and Subletting by Tenant as set forth in Section 17 of the Lease shall remain unmodified.

[SIGNATURE PAGES FOLLOW]

TENANT

IN WITNESS WHEREOF, the undersigned, by its duly elected officer(s) and pursuant to proper authority has duly executed, acknowledged and delivered this instrument as its true act and deed.

	SPRINTCOM, INC., a Kansas corporation By: _____ Name: John F. Buchert Title: Assistant Secretary

CB03XC026 SCIOTO PARK

H2003438

LANDLORD

IN WITNESS WHEREOF, the undersigned, by its duly elected officer(s) and pursuant to proper authority of its board of directors has duly executed, acknowledged and delivered this instrument as its true act and deed.

	CITY OF DUBLIN, a Ohio municipal corporation By: Jane O. Brautigam Name: Jane S. Brautigam Title: City Manager

CB03XC026 SCIOTO PARK

H2003438

LANDLORD

IN WITNESS WHEREOF, the undersigned has duly executed, acknowledged and delivered this instrument as of the day and year above written.

	CITY OF DUBLIN, an Ohio municipal corporation Approved as to form: _____ Dublin Law Director

EXHIBIT A

Lease and Legal Description

(see attached)

GAHANNA TITLE BOX 4002

TOWER SITE NON-EXCLUSIVE LEASE AGREEMENT

THIS TOWER SITE LEASE AGREEMENT ("Lease") is made and entered into as of the 16 day of NOV., 1998 , by and between City of Dublin, an Ohio municipal corporation ("Landlord"), and Sprintcom, Inc., a Kansas corporation ("Tenant").

WHEREAS, the execution of this Lease has been duly authorized by Dublin City Council Ordinance No. 103-98, passed September 21, 1998 by Dublin City Council.

NOW, THEREFORE, and consideration of the mutual promises and benefits contained herein, the parties agree as follows:

AGREEMENTS

1. PREMISES

Landlord leases to Tenant, and Tenant leases from Landlord, certain land owned by Landlord, legally described on Exhibit A" ("Premises"). Landlord also grants Tenant a non-exclusive Access Easement and Non-Exclusive Utility Easement described in Section 5 of this Lease on, over, under and upon the adjacent land of Landlord.

2. USE

Tenant's communications equipment The Premises will be used for the purpose of installing, constructing, maintaining, repairing, operating, altering, inspecting, and removing, including, but not limited to, the following:

2.1. Any and all antenna(s), dishes(es) and/or grids as Tenant may deem appropriate, subject to Landlord's prior approval, which approval will not be unreasonably withheld.

2.2. Transmission lines and mounting and grounding hardware.

2.3. A raised steel equipment platform and a communications cabinet ("Communication Cabinet") containing, without limitation, telecommunications equipment consisting of base station(s), wireless communication equipment, switch(es), power supply(ies), battery(ies), and accessories.

For the purposes of this Lease, all of Tenant's equipment, antennas, dishes, lines, switches, power supplies, batteries, Communications Cabinet, Tower, accessories, and necessary appurtenances will be referred to herein collectively as the "Communications Facility".

The above-described platform, Communications Cabinet, equipment contained therein, and lines and equipment may be installed by Tenant or by any of Tenant's agents or contractors. Tenant has the right to make alterations to the Communications Facility from time to time as Tenant determines to be necessary or desirable, with prior written approval of the Landlord, which approval will not be unreasonably withheld, conditioned or delayed.

Notwithstanding any of the foregoing, Tenant at its sole cost and expense shall erect and maintain a 100' camouflage telecommunications tower masked to resemble a pine tree. The tower will be engineered to accommodate one (1) additional carrier's antennas. All equipment groundspace required by the future carrier will be negotiated by and between the future carrier and the City of Dublin. The tower and appurtanent facilities will be maintained exclusively by Tenant as outlined by the manufactures standard recommendations.

Additionally, Tenant shall install and maintain landscaping pursuant to the Dublin City Code, which shall be approved, prior to installation by the Landlord's zoning staff. Landlord's approval will not be unreasonably withheld, conditioned or delayed and will be deemed recovered by the landscaping as installed and maintained pursuant to the Dublin City Code.

3. TERM

3.1. **Primary Term**

The primary term ("Primary Term") of this Lease will be for ten (10) years, and will commence on _____, 1998, and (the "Commencement Date") will terminate at 11:59 p.m. on _____, unless sooner terminated as provided herein.

3.2. **Extended Term**

Tenant is granted the option to extend the Primary Term of this Lease for (5) additional period of five (5) years each ("Extended Term"), provided Tenant is not then in default under this Lease. Each of Tenant's options to extend will be deemed automatically exercised without any action by either party unless Tenant gives written notice of its decision not to exercise any option(s) to Landlord before expiration of the then current term.

4. RENT

The base rental for the primary term of the Lease shall be [redacted] Payment for the first two (2) years of the lease, in the amount of [redacted] shall be paid upon execution of this Lease. The

RECEIVED
NOV 12 1998
CITY OF DUBLIN

remaining base annual payments of [redacted] for years three (3) through ten (10) of the Primary Term shall be payable in advance on or before the commencement date of each calendar year during the remainder of the primary term and each extended term, partial years to be prorated. Additionally, for years three through ten of the Primary Term and any Extended Term, the rent shall be increased for each one year period by the percentage increase, if any, in the Consumer Price Index ("CPI"), ALL ITEMS", U.S. Average (1967 = 100), as measured by the U.S. Bureau of Labor Statistics, or any successor indices for the subsequent period over and above the CPI for the month in which the prior period shall have commenced. No increase in the CPI shall reduce the rent for any period below the rental paid for the immediately preceding period. It is understood and agreed by the parties hereafter that in no event shall the rent for any successive period exceed a [redacted] over and above the prior five year term.

Rent during the Extended Term of this Lease that is less than one (1) year will be prorated based on a three hundred sixty-five (365) day year.

5. ACCESS AND UTILITIES

Landlord grants to Tenant, for use by Tenant, its employees, agents, contractors and by utility companies, a non-exclusive recorded easement and a non-exclusive license over, under, upon and across the adjoining lands of Landlord, and rights-of-way or easements owned or leased by Landlord, on a twenty-four (24) hour daily basis, for (i) ingress and egress to and from the Premises and the Communications Facility (the "Access Easement"), and (ii) the installation, operation and maintenance of necessary utilities for the Premises and the Communications Facility (the "Utility Easement"). Landlord shall provide Tenant a set of gate keys to the Scioto Park access gates. Tenant will provide Landlord and the City of Dublin Police Department with emergency contact phone numbers. Tenant may improve the Access Easement by grading, and gravel during the term of construction, only. Upon completion of construction any improvement made to the Access Easement shall be removed; the underlying land will be graded and re-seeded. The Access Easement, to the extent further identified, is more particularly described on "Exhibit B", and the Utility Easement, to the extent further identified and not lying within the Access Easement, is more particularly described on Exhibit C". Upon completion of the Communications Facility, Tenant will provide as-built utility drawings to Landlord.

Notwithstanding any of the foregoing, Landlord reserves the right to inspect the Premises, so long as Tenant's use of the Premises and operation of the Communications Facility is not disturbed. Additionally, Tenant will post, via sign approved by Landlord's staff, an emergency telephone number for the purpose of contacting the Tenant or Tenant's agents. Additionally, Tenant will provide this information to the Dublin Division of Police.

6. UTILITIES

Tenant will be solely responsible for and promptly pay all charges for gas, electricity, telephone service, or any other utility used or consumed by Tenant on the Premises. If necessary, Tenant will have a meter installed at the Premises for Tenant's utility use, and the cost

RECEIVED
NOV 12 1998
CITY OF DUBLIN

of such meter and of installation, maintenance, and repair thereof will be paid for by Tenant. Tenant may install or improve existing utilities servicing the Communications Facility and may install an electrical grounding system or improve any existing electrical grounding system to provide the greatest possible protection from lightning damage to the Communications Facility.

7. HOLDING OVER

If Tenant holds possession of the Premises or any portion thereof after the date upon which the Premises are to be surrendered, Tenant will become a tenant on a month-tomonth basis upon all terms, covenants, and conditions of this Lease except those pertaining to the lease term and, during any such month-to-month tenancy, Tenant will pay monthly rent in an amount that is one-twelfth (1/12th) of the Rent. Tenant will continue occupying the Premises from month-to-month until terminated by Landlord or Tenant by the giving of thirty (30) days prior written notice to the other.

8. NOTICE

All notices or demands are deemed to have been given or made when delivered in person or mailed by certified, registered, or express mail, return receipt requested, postage prepaid, United States mail, and addressed to the applicable party as follows:

Landlord: City of Dublin
5200 Emerald Parkway
Dublin, Ohio 43016
Attention: City Manager

Tenant: SprintCom, Inc.
1200 Main Street
Kansas City, Missouri 64105
Attention: Director Network Real Estate

With a copy to: Sprint Spectrum L.P.
4900 Main Street, 11th Floor
Kansas City, Missouri 64112
Attention: Business Law Group

A party may change its address to which any notice or demand may be given by written notice thereof to the other party.

RECEIVED
NOV 12 1998
CITY OF DUBLIN

9. LIABILITY AND INDEMNITY

Tenant agrees to indemnify and save Landlord harmless from all claims (including costs and expenses of defending against such claims) arising from any breach of this Lease by Tenant, or any negligent act, negligent omission or intentional tort of Tenant or Tenant's agents, employees, contractors, invitees or licensees occurring during the term of this Lease in or about the Premises. Landlord agrees to indemnify and save Tenant harmless from all claims (including costs or expenses of defending against such claims) arising from any breach of this Lease by Landlord, or any negligent act, negligent omission or intentional tort of Landlord or Landlord's agents, employees, contractors, invitees, licensees. The provisions of this Section 9 will survive the termination of this Lease.

10. TERMINATION

10.1. In addition to the right to terminate granted in Section 11 of this lease, Tenant has the right to terminate this Lease at any time upon any of the following events:

10.1.1. If the approval of any agency, board, court, or other governmental authority necessary for the construction and/or operation of the Communications Facility cannot be obtained, or is revoked, or if Tenant determines the cost of obtaining such approval is prohibitive; or

10.1.2. If Tenant determines that the Premises are not appropriate for locating the Communications Facility for technological reasons, including, but not limited to, signal interference.

10.2. Tenant will give Landlord thirty (30) days written notice of termination of this Lease under the terms of Section 10.1.2. and 10.1.3. above. Upon termination, neither party will owe any further obligations under this Lease except for the indemnities and hold harmless provisions in this Lease, the provisions of Section 20 of this lease, the prompt reimbursement of pro-rata prepaid rent and Tenant's responsibility for removing all of the Communications Facility from the Premises and restoring the Premises to its condition as of the commencement date of this Lease, as near as practicable (save and except removal of vegetation for construction purposes, and, items constructed or changed by any person(s) or entity(ies) other than Tenant, normal wear and tear, and acts beyond Tenant's control).

11. DEFAULT

If Tenant fails to comply with any material provision of this Lease and such failure is not cured within thirty (30) days after receipt of written notice thereof to Tenant, Landlord may, at its option, cure the failure at Tenant's expense or terminate this Lease without affecting its right to demand, sue for, and collect all of its damages arising out of Tenant's failure to comply. If any such default cannot reasonably be cured within thirty (30) days, Tenant will not be deemed to be in default under this Lease if Tenant commences curing such default within the thirty (30) day period and thereafter diligently pursues such cure to completion.

The rights and remedies stated in this Lease are not exclusive and the parties, in the event of a breach of this Lease or a dispute, are entitled to pursue any of the remedies provided in this Lease, by law, or by equity.

No course of dealing between the parties or any delay on the part of a party to exercise any right it may have under this Lease will operate as a waiver of any of the rights provided hereunder or by law or equity, nor will any waiver of any prior default operate as the waiver of any subsequent default, and no express waiver will affect any term or condition other than the one specified in such waiver and the express waiver will apply only for the time and manner specifically stated.

12. TAXES

Unless separately billed to Tenant by a taxing authority, Tenant will pay annually to Landlord an amount equal to any increase in real estate taxes attributable to any improvement to the Premises made by Tenant. Tenant will pay to Landlord Tenant's share of any such tax within sixty (60) days of receipt of sufficient documentation indicating calculation of Tenant's share and payment of the real estate taxes by Landlord. Landlord must pay annually when due all real estate taxes and assessment attributable to the Premises, the Access Easement, the Utility Easement, and the tax lot(s) of which they are a part. Upon written request by Tenant, Landlord will furnish evidence of payment of such assessments and taxes.

13. INSURANCE

13.1. Required Insurance of Tenant

Tenant must, during the term of this Lease and at Tenant's sole expense, obtain and keep in force, not less than the following insurance:

13.1.1. Property insurance, including coverage for fire, extended coverage, vandalism and malicious mischief, upon the Communications Facility in an amount not less than ninety percent (90%) of the full replacement cost of the Communications Facility;

13.1.2. Commercial General Liability insuring operations hazard, independent contractor hazard, contractual liability, and products and completed operations liability, in limits

not less than $5,000,000 combined single limit for each occurrence for bodily injury, personal injury and property damage liability, naming Landlord as an additional insured; and

13.1.3. Workers' Compensation and Employer's Liability insurance.

13.2. **Policies of Insurance**

All required insurance policies must be taken out with reputable national insurers that are licensed to do business in the jurisdiction where the Premises are located. Tenant will deliver certificates of insurance to the landlord at the commencement of each term. All policies must contain an undertaking by the insurers to notify the other party in writing not less than fifteen (15) days before any material change, reduction in coverage, cancellation, or termination of the insurance.

14. PREFERENTIAL RIGHT TO PURCHASE

If Landlord receives, during the Primary Term or any Extended Term, a bona fide offer to purchase Landlord's interest, or any portion thereof, in and to the Premises, Access Easement, Utility Easement, or any portion thereof (said property rights together with any of the property covered by said offer being referred to collectively in this Lease as the "Subject Lands"), on terms and conditions acceptable to Landlord, Landlord must refrain from accepting such offer until Landlord has given Tenant written notice of such offer, together with a true, correct, and complete copy of such offer, and has afforded Tenant twenty-one (21) business days following Tenant's receipt of such notice in which to review and consider the same.

Tenant shall have the preferential right to purchase Landlord's interest in and to the Subject Lands on substantially similar terms and conditions set forth in such offer, except as otherwise provided below, and except that, in the case of any proposed property swap, the purchase price shall be the fair market value of the property plus boot offered. The right to purchase may be exercised by Tenant by delivering to Landlord, prior to 6:00 p.m. Central Time on the twenty-first (21st) business day following Tenant's receipt of Landlord' notice of a bona fide offer, written notice of Tenant's election to exercise such right to purchase. The closing of the transaction resulting from Tenant's nearest business office no earlier than thirty (30) days following Tenant's exercise of this preferential right to purchase. If Tenant fails or declines to exercise Tenant's preferential right to purchase will survive any sale and conveyance of Landlord's interest in the Subject Lands, and will remain effective with respect to any subsequent offer to purchase the Subject Lands or any subdivided part thereof for the shorter of forty (40) years from the commencement date of the Primary Term, the maximum time limit allowed by the rule against perpetuities, or the date of Lease termination.

15. FIXTURES

Landlord covenants and agrees that no part of the improvements installed, constructed, erected or placed by Tenant on the Premises or other real property owned by Landlord, will become, or be considered as being, affixed to or a part of Landlord's real property; and any and all provisions and principles of law to the contrary notwithstanding, it is the specific intention of Landlord to covenant and agree hereby that all personal property and improvements of every kind and nature installed, constructed, erected, or placed by Tenant on the Premises, or other real property owned or leased by Landlord, will be and remain the property of Tenant despite any default or termination of this Lease and may be removed by Tenant any time in Tenant's discretion provided that Tenant at its expense restores the Premises pursuant to Section 10.2.

16. MEMORANDUM OF AGREEMENT

After preparation of the legal description of the Premises, Access Easement and Utility Easement, each party, at the request of the other, will sign a Memorandum of Lease, Easements and Preferential Right to Purchase. Tenant, at its sole expense, may record the Memorandum of Lease, Easements and Preferential Right to Purchase in the land records of the recording office(s) reasonable for notice purposes.

17. ASSIGNMENT AND SUBLETTING BY TENANT

Tenant shall have the right to assign its rights under this Lease upon prior written notice to and with the consent of Landlord which shall not be unreasonably withheld. Notwithstanding any of the foregoing, Tenant may without consent of the Landlord assign this Lease to any related or controlling party or entity.

18. PERMITS

Landlord acknowledges that Tenant will be contacting the appropriate local governmental agencies for the purposes of obtaining all building permits and approvals, zoning changes and/or approvals, valances, use permits, and other governmental permits and approvals (collectively, "Permits") necessary for the installation, construction, operation and maintenance of the Communications Facility. Landlord agrees to fully cooperate with Tenant in obtaining the Permits and, without limiting the generality of the foregoing, to execute any applications, maps, certificates or other documents that may be required in connection with the Permits.

19. DEBT SECURITY

Tenant may, without Landlord's consent, pledge, mortgage, convey by deed of trust or security deed, assign, create a security interest in, or otherwise execute and deliver any and all

instruments for the purpose of securing bona fide indebtedness any or all of Tenant's interest in this Lease, any part thereof, and any and all of Tenant's right, title, and interest in and to any and all of the Communications Facility. Promptly on Tenant's or Tenant's lender's request, Landlord shall execute and deliver, and shall assist in facilitating the execution and delivery of, all documents requested by any of Tenant's lenders including but not limited to waivers of Landlord's right to levy or distrain upon for rent any of Tenant's property given as security for a debt, consents to giving notice to Tenant's lender(s) in the event of Tenant's default under the provisions of this Lease, consents to Tenant's assignment to any lender(s) of any and all of Tenant's interest in or to this Lease and the Communications Facility and nondisturbance agreements from Lender and Landlord's lenders.

20. ENVIRONMENTAL MATTERS

Landlord warrants and represents that the Premises, Access Easement and Utility Easement, and any easements improvements thereon, are free of Hazardous Substances (as defined below). Landlord will indemnify, protect, defend, and hold harmless Tenant from and against all claims, suits, actions, causes of action, assessments, losses, penalties, costs, damages and expenses, including, without limitation, attorneys' fees, sustained or incurred Tenant pursuant to any federal, state or local laws, implementing regulations, common law or otherwise, dealing with matters relating to the environment, hazardous substances, toxic substances and/or contamination of any type whatsoever (collectively, "Hazardous Substances") in, upon or beneath the Premises, Access Easement or the Utility Easement, provided this indemnification shall not apply with respect to any Hazardous Substances released by Tenant.

Tenant will indemnify, protect, defend and hold harmless Landlord from and against all claims, suits, actions, causes of action, assessments, losses, penalties, costs, damages and expenses, including, without limitation, attorneys' fees, sustained or incurred by Landlord pursuant to any federal, state or local laws, implementing regulations, common law or otherwise dealing with matters relating to Hazardous Substances released by Tenant in, upon or beneath the Premises, Access Easement or Utility Easement.

21. FENCES

During the Primary Term and each Extended Term, Tenant shall with Landlord's approval fence in that portion of the Premises as Tenant determines is reasonable for the proper and efficient operation and protection of the Communications Facility. Fencing shall be black, vinyl-coated chain-link variety.

22. TITLE

Landlord represents and warrants to Tenant that Landlord has good and marketable title to the Premises, Access Easement and Utility Easement, free and clear of all liens, encumbrances and exceptions, except those described in "Exhibit D" attached hereto, of duration and quality equal to that conveyed to Tenant by this Lease. Landlord shall warrant and defend the same to Tenant against the claims and demands of all persons and entities

23. CONDEMNATION OF PREMISES

If any governmental, public body or other condemning authority takes, or if Landlord transfers in lieu of such taking, all or part of the Premises, Access Easement or Utility Easement thereby making it physically or financially infeasible for the Premises to be used in the manner intended by Lease, Tenant shall have the right to terminate this Lease effective as of the date of the taking by the condemning party and the rental shall be prorated appropriately. If only a portion of the Premises, Access Easement or Utility Easement is taken, and Tenant does not elect to terminate this Lease under this provision, then this Lease shall continue but rental payments provided under this Lease shall abate proportionately as to the portion taken which is not then usable by Tenant, and Landlord shall make all necessary repairs and alterations to restore the portion of the Premises, Access Easement and Utility Easement remaining to as near their former condition as circumstances will permit (at a cost not to exceed Landlord's proceeds from said condemnation or transfer).

In the event of any condemnation, taking or conveyance in lieu thereof which results in a termination of this Lease, Landlord will not be entitled to that portion, if any, of an award made to or for the benefit of Tenant for loss of Tenant's business or depreciation, the cost of removal of Tenant's trade fixtures and equipment or the value of any unexpired term of this Lease.

24. QUIET ENJOYMENT

Landlord covenants that Tenant, upon payment the rent and observing the other covenants and conditions herein upon its part to be observed, will peaceably and quietly hold and enjoy the right to use the Premises, Access Easement and Utility Easement on the terms and conditions and for the purposes stated herein during the term of this Lease, as it may be extended, without hindrance, ejection or molestation by Landlord or any person(s) or entity(ies) claiming under Landlord.

25. CONTINGENCIES

Notwithstanding anything contained herein to the contrary, and in addition to and not in limitation of Tenant's other rights hereunder, it is expressly agreed that Tenant's obligations under this Lease are conditioned upon:

25.1. Tenant's satisfaction with the status of title to the Premises and, at Tenant's option, Tenant's receipt of a leasehold title insurance policy insuring its leasehold interest in the Premises, in form and substance satisfactory to Tenant; and

25.2. Landlord's obtaining and furnishing to Tenant

25.3. Tenant's satisfaction; in its sole and absolute discretion, with the feasibility of engineering, installing, constructing and operating the Communication's Facility; Tenant's receipt of all necessary or appropriate building and construction permits and all licenses, permits, approvals and consents from all applicable governmental authorities necessary or appropriate for Tenant to use and operate the Communications' Facility on the Premises.

Tenant is hereby given as the right to survey, soil test, radio coverage test, and to conduct any other investigations needed to determine if the surface and location of the Premises are suitable for Tenant's use intended by this Lease.

26. INTERFERENCE

Landlord agrees to lease or use any other areas of the Premises for placement of communication facilities only if prior to placement of such communication facilities, Tenant agrees in writing that the new Lease/or uses will not operationally interfere with Tenant's use of the Premises.

27. ITEMS TO BE DELIVERED TO TENANT

Within ten (10) days following the last date of execution of this Lease, Landlord shall, to the extent available, deliver to Tenant an accurate copy of all engineering reports, environmental audits, surveys, plats, plans, blueprints and other drawings relating to the Premises.

28. COMPLIANCE

Landlord represents and warrants that all operations conducted by Landlord in connection with the Property meet all applicable state, federal, county and local codes and regulations. Landlord agrees that it will conduct its operations in the future in accordance with all such codes and regulations. Landlord is not required to obtain any consent under any ground lease, mortgage, deed of trust or other instrument encumbering the Property in order for Tenant to construct, operate, maintain or access the Communications Facility.

During the term of this Lease, Tenant will comply with all applicable laws relating to Tenant's use of the Premises. Tenant will not commit or suffer rot be committed any waste on the Premises or any nuisance.

29. LIENS

Tenant shall keep the Premises free from any liens arising out of any work performed, materials furnished or obligations incurred by or on behalf of Tenant and shall indemnify, defend and hold Landlord harmless from all claims, costs and liabilities, including

reasonable attorneys' fees and costs, in connection with or arising out of any such lien or claim of lien. Tenant shall cause any such lien imposed on the Premises to be released of record by payment or posting of a proper bond within thirty (30) days after written request by Landlord.

30. ENTIRE AGREEMENT AND BINDING EFFECT

This Lease and any attached exhibits and nondisturbance and attornment agreement(s) mentioning this Lease, constitute the entire agreement between Landlord and Tenant; no prior written promises or prior contemporaneous or subsequent oral promises or representations will be binding. This Lease will not be amended or changed except by written instrument signed by the parties hereto. Section captions herein are for convenience of reference only and neither limit nor amplify the provisions of this Lease. The invalidity of any portion of this Lease shall not have any effect on the balance thereof. The provisions of this Lease shall be binding upon and inure to the benefit of the heirs, executors, administrators, successors, and assigns of Landlord and Tenant.

31. GOVERNING LAW

This Lease shall be governed by the laws of the State of Ohio.

32. NON-BINDING UNTIL FULLY EXECUTED

This Lease is for discussion purposes only and does not constitute a formal offer by either party. This Lease is not and shall not be binding on either party until and unless it is fully executed by both parties.

IN WITNESS WHEREOF, Landlord and Tenant have signed this Lease as of the date and year first above written.

TENANT:
SPRINTCOM, INC.
By: Michael S. Romesburg
Name: Michael S. Romesburg
Title: Area Manager

IN THE PRESENCE OF:
Michael K. Hennon
Michael K. Hennon

Angela L. Funk
Angela L. Funk

LANDLORD: Timothy C. Hansley
DUBLIN CITY MANAGER
By: Richard P. Hellwig
Name: RICHARD P. HELLWIG
Title: City Manager

IN THE PRESENCE OF:

Tamara L. Brown

TAMARA L. BROWN
Notary Public, State of Ohio
My Commission Expires 8/2/[illegible]

MHB/KAA/264933
035505.602
Rev. October, 27, 1997

Sprint PCS Site No. CO026D

LEASE AREA

A part of Lot 6 in River Oaks Subdivision, the plat of which is recorded in Plat Book 51, page 58, Franklin County, Ohio, described as follows: Commencing at the northeast corner of said Lot 6; thence South 0 degrees 31 minutes 30 seconds East 23.21 feet along the east line of said lot; thence South 79 degrees 50 minutes 53 seconds West 288.87 feet; thence South 0 degrees 00 minutes 02 seconds East 37.73 feet to the point of beginning of this description: thence South 90 degrees 00 minutes 00 seconds East 10.13 feet; thence South 0 degrees 00 minutes 00 seconds West 20.00 feet; thence North 90 degrees 00 minutes 00 seconds West 30.00 feet; thence North 0 degrees 00 minutes 00 seconds East 20.00 feet; thence South 90 degrees 00 minutes 00 seconds East 19.87 feet to the point of beginning and containing 600 square feet, more or less.

Subject to the right-of-ways, easements, and restrictions of record.

Given under my hand and seal 9-29-98

John H. Varner

John H. Varner
Registered Land Surveyor No. 7293
State of Ohio

STATE OF OHIO
JOHN H. VARNER
7293
REGISTERED PROFESSIONAL SURVEYOR

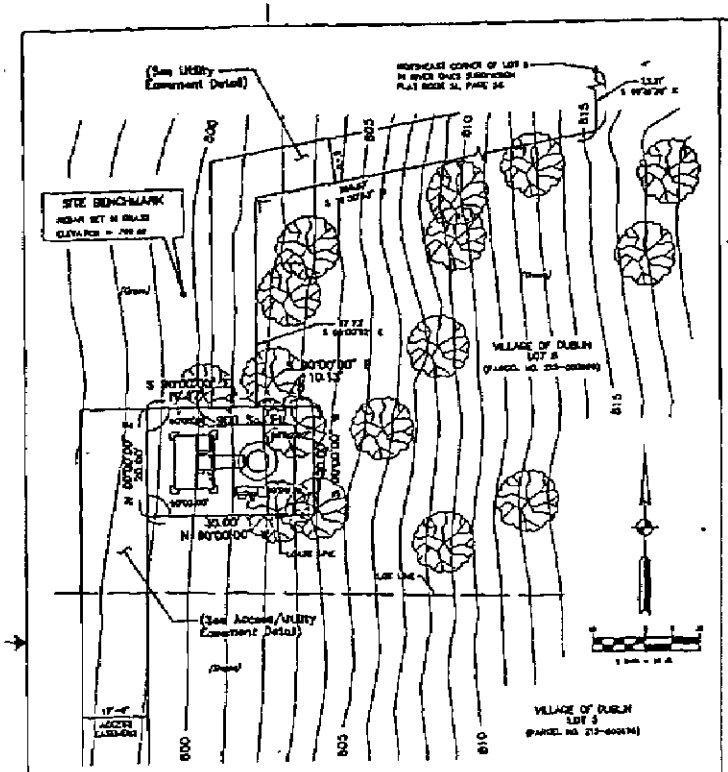

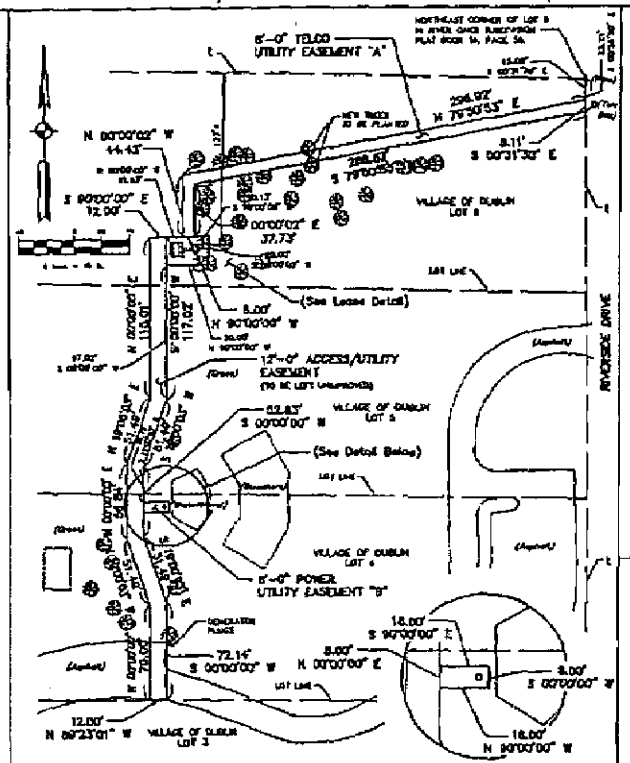

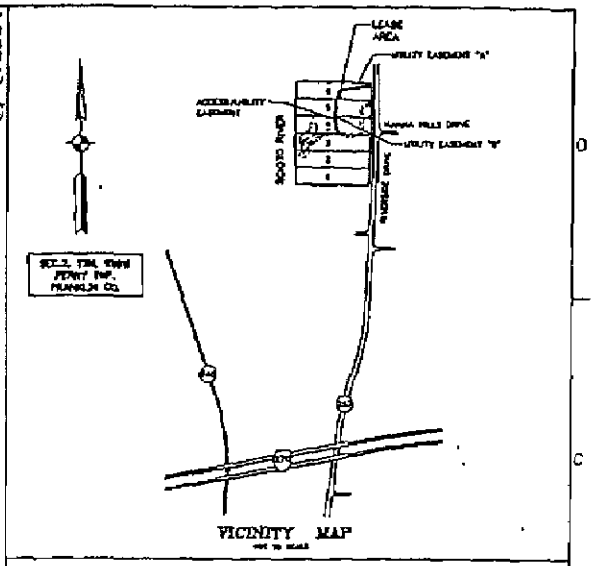

Legal description – Lease Area

A part of Lot 4 in River Oaks Subdivision, the plat of which is recorded in Plat Book 36, page 36, Franklin County, Ohio, described as follows: Commencing at the northwest corner of said Lot 4; thence South 6 degrees 31 minutes 30 seconds East 33.11 feet along the west line of said Lot 4; thence South 6 degrees 31 minutes 30 seconds East 206.87 feet; thence South 6 degrees 00 minutes 57 seconds East 37.73 feet to the point of beginning of this description; thence South 90 degrees 00 minutes, 00 seconds East 16.13 feet; thence South 0 degrees 00 minutes 00 seconds West 30.00 feet; thence North 90 degrees 00 minutes 00 seconds West 30.00 feet; thence North 0 degrees 00 minutes 00 seconds East 30.00 feet; thence South 90 degrees 00 minutes 00 seconds East 13.87 feet to the point of beginning and containing 900 square feet, more or less.

Subject to the rights-of-ways, easements and restrictions of record.

Legal description – Access/Utility Easement

A part of Lots 4, 5, and 6 in River Oaks Subdivision, the plat of which is recorded in Plat Book 36, page 36, Franklin County, Ohio, described as follows: Commencing at the northwest corner of said Lot 4; thence South 6 degrees 31 minutes 30 seconds East 33.11 feet along the west line of said Lot 4; thence South 79 degrees 30 minutes 33 seconds West 206.87 feet; thence South 6 degrees 00 minutes 57 seconds East 11.87 feet to the point of beginning of this description; thence South 6 degrees 00 minutes 00 seconds West 117.02 feet; thence South 19 degrees 00 minutes 04 seconds West 31.10 feet; thence South 6 degrees 00 minutes 00 seconds West 73.00 feet to the south line of said Lot 4; thence North 90 degrees 00 minutes 00 seconds West 12.00 feet along said south line; thence North 6 degrees 00 minutes 00 seconds East 70.00 feet; thence North 19 degrees 00 minutes 04 seconds East 31.10 feet; thence North 6 degrees 00 minutes 00 seconds East 31.10 feet; thence North 6 degrees 00 minutes 00 seconds East 117.02 feet; thence South 90 degrees 00 minutes 00 seconds East 12.00 feet to the point of beginning and containing 4,170 square feet, more or less.

Subject to the rights-of-ways, easements, and restrictions of record.

Notes:

1) According to the existing tables with a GPS receiver and checked with the United States Department of the Interior Geological Survey Map, Northwest Columbus, OH in the Near vicinity and First AZ degrees 00 minutes 00 seconds Longitude.

2) The elevations are referenced to the NGVD 29 datum.

3) In the proposed grade, the 12 ft. wide access road shall be 2" of #53 stone over a 6" layer of 2" diameter stone (Lunker Topsoil).

4) It is recommended that the contractor notify Ohio Underground (1-800-362-2764) 48 hours in advance of construction, for the exact location of utility crossings.

5) Boundary locations are approximate and based on the information provided by Sprint PCS. No measurements were made with adjacent owners.

FIRST GROUP ENGINEERING INC.
CONSULTING ENGINEERS
8724 W. 34TH STREET, INDIANAPOLIS, INDIANA
PH. (317) 390-6649 FAX (317) 390-9680

SCIOTO PARK
7377 RIVERSIDE DRIVE
COLUMBUS, OH 43016
FRANKLIN COUNTY

Sprint PCS
2 EASTON OVAL, SUITE 400
COLUMBUS, OHIO 43219
CONSTRUCTION DRAWING FOR
SITE NO. CBG3XX0280

REV.	DATE	REVISION	BY	CHK	APV'D
6	1/25/96	REVISED LEASE AREA LOCATION	MBB	LAK	JAY
5	6/26/96	REVISED LEASE AREA	MBB	LAK	JAY
4	7/26/96	CHANGE LANDSCAPE AND FENCE	LAK	LAK	LDE
3	7/30/96	ADDED SETBACK & DIMENSION	PH	MBB	JAY
2	8/26/96	REVISED LEASE AREA & U/E	MBB	LAK	JAY
1	9/13/96	REVISED LEASE AREA & U/E	DPS	MBB	JAY

DATE: 12/23/96 CHECKED BY: L.A.K. DRAWN BY: N.E.B.

Sprint PCS

SITE PLAN AND ACCESS DETAILS

SITE NUMBER	DRAWING NUMBER	REV.
CBG3XX0280	C1	

LEASE AREA GRAVEL SURFACING DETAIL (REV. 1)

DETAIL

GROUNDING & ELECTRICAL LEGEND

ABBREVIATIONS

GROUNDING NOTES

GENERAL CONSTRUCTION NOTES

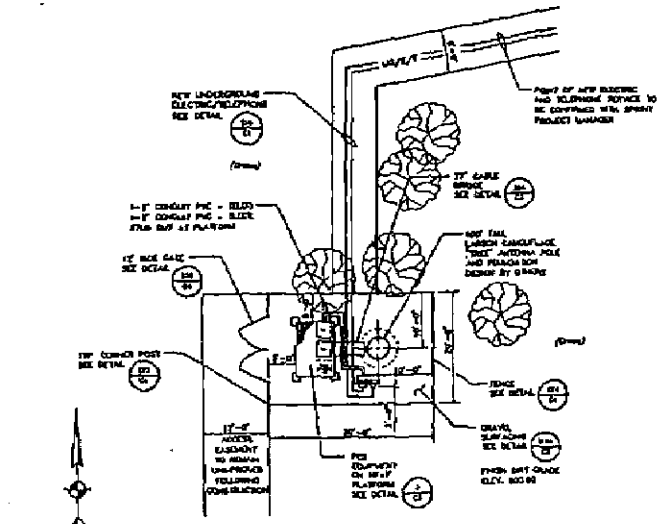

LEASE AREA DETAIL PLAN

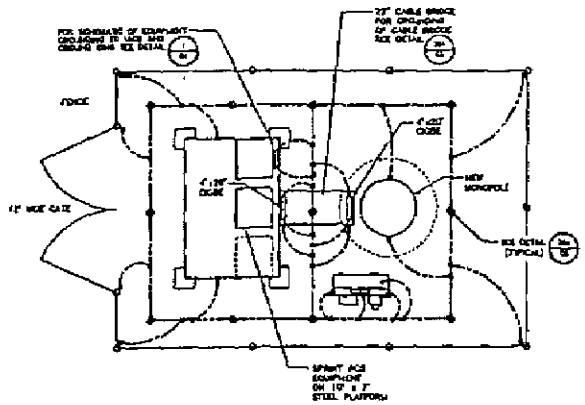

GROUNDING PLAN

NORTH

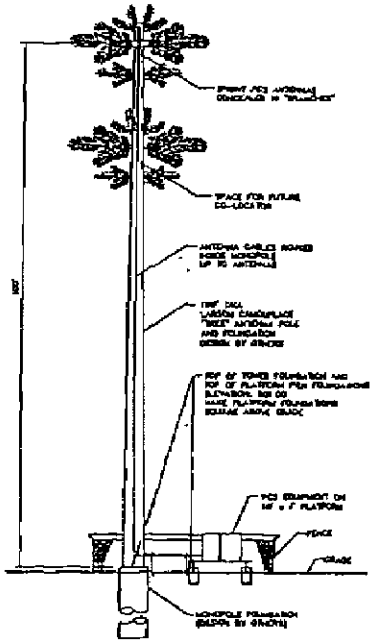

SITE ELEVATION

FIRST GROUP ENGINEERING INC.
CONSULTING ENGINEERS

SCIOTO PARK
7377 RIVERSIDE DRIVE
COLUMBUS, OH 43016
FRANKLIN COUNTY

Sprint PCS
3 EASTON OVAL, SUITE 400
COLUMBUS, OHIO 43219
CONSTRUCTION DRAWING FOR
SITE NO. CBOSUCO250

5	1/28/98	REVISED COMPOUND	MRB	LAW	KCS
4	1/19/98	REVISED COMPOUND AND POLE	MRB	LAW	KCS
3	1/23/98	CHANGE LANDSCAPE AND FENCE	LAW	LAW	KCS
2	1/20/98	REVISED COMPOUND	MRB	LAW	KCS
1	1/14/98	REVISED COMPOUND AND POLE	DTL	MRB	KCS
NO.	DATE	REVISIONS	BY	CHK	APPD

DATE: 01/01/98 DRAWN BY: L.A.W. DESIGN BY: K.A.S.

Sprint PCS

COMPOUND LAYOUT & GROUNDING PLAN

SITE NUMBER	DRAWING NUMBER	REV
CBOSUCO250	C2	

EXHIBIT A, page 3 of 3

EXHIBIT B

Sprint PCS Site No. CO026DAE

ACCESS/UTILITY EASEMENT

A part of Lots 4, 5, and 6 in River Oaks Subdivision, the plat of which is recorded in Plat Book 51, page 58, Franklin County, Ohio, described as follows: Commencing at the northeast corner of said Lot 6; thence South 0 degrees 31 minutes 30 seconds East 15.09 feet along the east line of said Lot 6; thence South 79 degrees 50 minutes 53 seconds West 296.92 feet; thence South 0 degrees 00 minutes 02 seconds East 44.43 feet; thence North 90 degrees 00 minutes 00 seconds West 11.87 feet to the point of beginning of this description: thence South 0 degrees 00 minutes 00 seconds West 117.02 feet; thence South 19 degrees 00 minutes 03 seconds West 51.49 feet; thence South 0 degrees 00 minutes 00 seconds West 52.83 feet; thence South 19 degrees 00 minutes 03 seconds East 51.49 feet; thence South 0 degrees 00 minutes 00 seconds West 72.14 feet to the south line of said Lot 4; thence North 89 degrees 23 minutes 01 second West 12.00 feet along said south line; thence North 0 degrees 00 minutes 00 seconds East 70.00 feet; thence North 19 degrees 00 minutes 03 seconds West 51.49 feet; thence North 0 degrees 00 minutes 00 seconds East 56.84 feet; thence North 19 degrees 00 minutes 03 seconds East 51.49 feet; thence North 0 degrees 00 minutes 00 seconds West 115.01 feet; thence South 90 degrees 00 minutes 00 seconds East 12.00 feet to the point of beginning and containing 4,139 square feet, more or less.

Subject to the right-of-ways, easements, and restrictions of record.

Given under my hand and seal 9-29-98

John H. Varner

John H. Varner
Registered Land Surveyor No. 7293
State of Ohio

STATE OF OHIO
JOHN H. VARNER
7293
REGISTERED PROFESSIONAL SURVEYOR

Sprint PCS Site No. CO026DUE

UTILITY EASEMENT "A"

A part of Lot 6 in River Oaks Subdivision, the plat of which is recorded in Plat Book 51, page 58, Franklin County, Ohio, described as follows: Beginning at a point on the east line of said Lot 6, which point is South 0 degrees 31 minutes 30 seconds East 15.09 feet from the northeast corner of said Lot 6; thence South 0 degrees 31 minutes 30 seconds East 8.11 feet along the east line of said Lot 6; thence South 79 degrees 50 minutes 53 seconds West 288.87 feet; thence South 0 degrees 00 minutes 02 seconds East 37.73 feet; thence North 90 degrees 00 minutes 00 seconds West 8.00 feet; thence North 0 degrees 00 minutes 02 seconds West 44.43 feet; thence North 79 degrees 50 minutes 53 seconds East 296.92 feet to the point of beginning and containing 2,672 square feet, more or less.

Subject to the right-of-ways, easements, and restrictions of record.

Given under my hand and seal 9-29-98

John H. Varner

John H. Varner
Registered Land Surveyor No. 7293
State of Ohio

STATE OF OHIO
JOHN H. VARNER
7293
REGISTERED PROFESSIONAL SURVEYOR

Sprint PCS Site No. CO026DUE

UTILITY EASEMENT "B"

A part of Lot 4 in River Oaks Subdivision, the plat of which is recorded in Plat Book 51, page 58, Franklin County, Ohio, described as follows: Commencing at the northeast corner of Lot 6 in said subdivision; thence South 0 degrees 31 minutes 30 seconds East 23.21 feet along the east line of said Lot 6; thence South 79 degrees 50 minutes 53 seconds West 288.87 feet; thence South 0 degrees 00 minutes 02 seconds East 37.73 feet; thence South 90 degrees 00 minutes 00 seconds East 10.13 feet; thence South 0 degrees 00 minutes 00 seconds West 20.00 feet; thence North 90 degrees 00 minutes 00 seconds West 30.00 feet; thence South 0 degrees 00 minutes 00 seconds West 97.02 feet; thence South 19 degrees 00 minutes 03 seconds West 51.49 feet; thence South 0 degrees 00 minutes 00 seconds West 26.79 feet to the point of beginning of this description: thence South 90 degrees 00 minutes 00 seconds East 18.00 feet; thence South 0 degrees 00 minutes 00 seconds West 8.00 feet; thence North 90 degrees 00 minutes 00 seconds West 18.00 feet; thence North 0 degrees 00 minutes 00 seconds East 8.00 feet to the point of beginning and containing 144 square feet, more or less.

Subject to the right-of-ways, easements, and restrictions of record.

Given under my hand and seal 9-29-98

John H Varner

John H. Varner
Registered Land Surveyor No. 7293
State of Ohio

STATE OF OHIO
JOHN H. VARNER
7293
REGISTERED PROFESSIONAL SURVEYOR

TAXES

ADDRESS: 7377 RIVERSIDE DRIVE DUBLIN, OH 43016
TAX PARCEL NO.: 273-008821 AS TO LOT 1
100 % VALUATIONS: LAND $24,850.00, BLDG. $2,130.00, TOTAL $26,980.00

TAXES FOR THE YEAR 1997 ARE EXEMPTED

TAX PARCEL NO.: 273-008822 AS TO LOT 2
100 % VALUATIONS: LAND $24,710.00, BLDG. $490.00, TOTAL $25,200.00

TAXES FOR THE YEAR 1997 ARE EXEMPTED

TAX PARCEL NO.: 273-008823 AS TO LOT 3
100 % VALUATIONS: LAND $24,500.00, BLDG. $0.00, TOTAL $ 24,500.00

TAXES FOR THE YEAR 1997 ARE EXEMPTED

TAX PARCEL NO.: 273-008824 AS TO LOT 4
100 % VALUATIONS: LAND $24,500.00, BLDG. $5,000.00, TOTAL $29,500.00

TAXES FOR THE YEAR 1997 ARE EXEMPTED

TAX PARCEL NO.: 273-008825 AS TO LOT 5
100 % VALUATIONS: LAND $25,020.00, BLDG. $940.00, TOTAL $25,960.00

TAXES FOR THE YEAR 1997 ARE EXEMPTED

TAX PARCEL NO.: 273-008826 AS TO LOT 6
100 % VALUATIONS: LAND $24,500.00, BLDG. $0.00, TOTAL $24,500.00

TAXES FOR THE YEAR 1997 ARE EXEMPTED

MORTGAGES

NONE

LEASES

NONE

EASEMENTS

BUILDING SETBACK LINE PER RECORDED PLAT IN PLAT BOOK 51, PAGE 58, RECORDER'S OFFICE, FRANKLIN COUNTY, OH. (COPY ATTACHED)

EASEMENT FOR HIGHWAY PURPOSES TO **STATE OF OHIO** RECORDED IN DEED BOOK 1148, PAGE 556, RECORDER'S OFFICE, FRANKLIN COUNTY, OH. (COPY ATTACHED)

EASEMENT FOR HIGHWAY PURPOSES TO **STATE OF OHIO** RECORDED IN DEED BOOK 1149, PAGE 49, RECORDER'S OFFICE, FRANKLIN COUNTY, OH. (COPY ATTACHED)

EASEMENT TO **COLUMBUS AND SOUTHERN OHIO ELECTRIC COMPANY** RECORDED IN DEED BOOK 1446, PAGE 94, RECORDER'S OFFICE, FRANKLIN COUNTY, OH. (COPY ATTACHED)

(EASEMENTS CONTINUED)

EASEMENT TO COLUMBUS AND SOUTHERN OHIO ELECTRIC COMPANY RECORDED IN DEED BOOK 1897, PAGE 538, RECORDER'S OFFICE, FRANKLIN COUNTY, OH. (COPY ATTACHED)

EASEMENT TO COLUMBUS AND SOUTHERN OHIO ELECTRIC COMPANY RECORDED IN DEED BOOK 1983, PAGE 530, RECORDER'S OFFICE, FRANKLIN COUNTY, OH. (COPY ATTACHED)

SPRINKLING SYSTEM AGREEMENT TO METRO CENTER OWNERS ASSOCIATION INCORPORATED RECORDED IN DEED BOOK 3803, PAGE 622, RECORDER'S OFFICE, FRANKLIN COUNTY, OH. (COPY ATTACHED)

EASEMENT TO THE OHIO BELL TELEPHONE COMPANY RECORDED IN OFFICIAL RECORD 9695, PAGE I09, RECORDER'S OFFICE, FRANKLIN COUNTY, OH. (COPY ATTACHED)

EASEMENT TO COLUMBUS SOUTHERN POWER COMPANY RECORDED IN OFFICIAL RECORD 16270, PAGE C19, RECORDER'S OFFICE, FRANKLIN COUNTY, OH. (COPY ATTACHED)

EASEMENT TO THE OHIO BELL TELEPHONE COMPANY RECORDED IN OFFICIAL RECORD 18039, PAGE C07, RECORDER'S OFFICE, FRANKLIN COUNTY, OH. (COPY ATTACHED)

LIENS

NONE OF RECORD

GREENVILLE TREATY TITLE AGENCY, INC.

AUTHORIZED REPRESENTATIVE

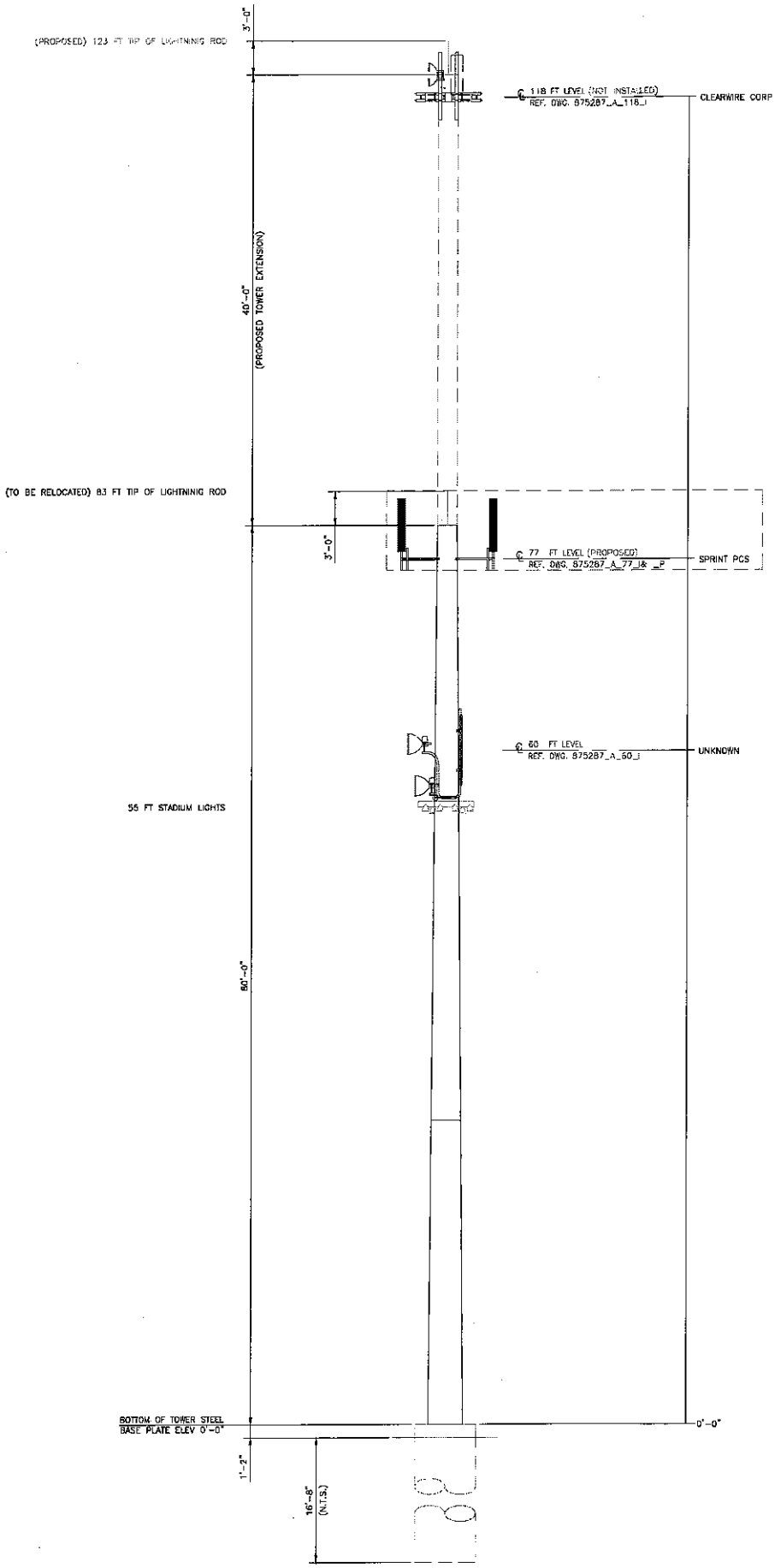

BUSINESS UNIT: 876287 TOWER ID: A

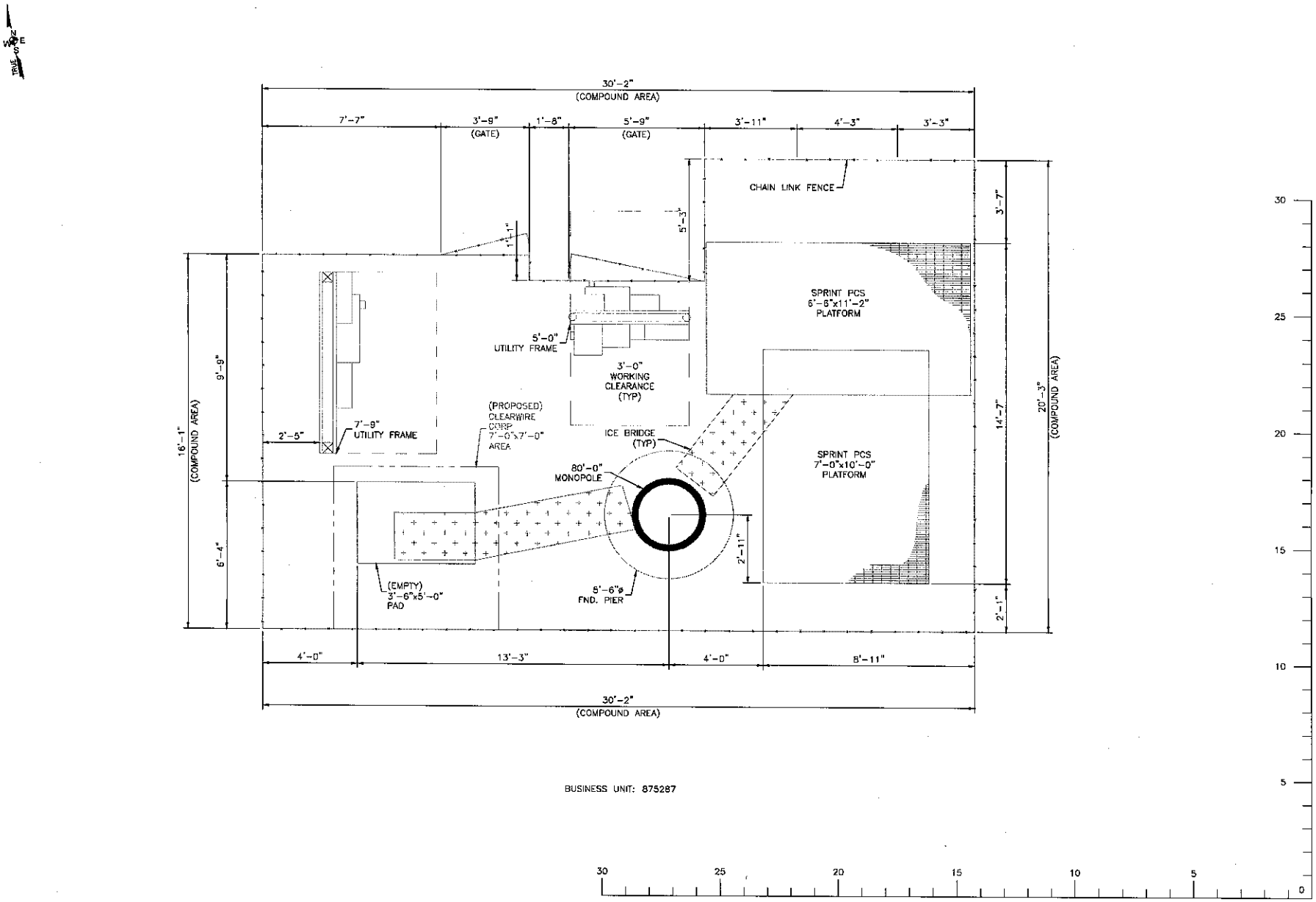
TRUE NORTH
30'-2"
(COMPOUND AREA)
7'-7"
3'-9"
(GATE)
1'-8"
5'-9"
(GATE)
3'-11"
4'-3"
3'-3"
CHAIN LINK FENCE
5'-3"
1'-1"
3'-7"
SPRINT PCS
6'-6"x11'-2"
PLATFORM
5'-0"
UTILITY FRAME
3'-0"
WORKING
CLEARANCE
(TYP)
(PROPOSED)
CLEARWIRE
CORP.
7'-0"x7'-0"
AREA
ICE BRIDGE
(TYP)
14'-7"
20'-3"
(COMPOUND AREA)
9'-9"
16'-1"
(COMPOUND AREA)
2'-5"
7'-9"
UTILITY FRAME
80'-0"
MONOPOLE
SPRINT PCS
7'-0"x10'-0"
PLATFORM
2'-11"
6'-4"
(EMPTY)
3'-6"x5'-0"
PAD
5'-6"ø
FND. PIER
2'-1"
4'-0"
13'-3"
4'-0"
8'-11"
30'-2"
(COMPOUND AREA)
BUSINESS UNIT: 875287
30
25
20
15
10
5
0