7377 Riverside Drive

Application Checklist

1. Application Fee – attached
2. CD's - attached
3. Original Signed/Notarized Application Form-attached
4. Legal Description – As Built Survey
5. List of Property Owners – Not supplied as this is an existing facility with no substantial changes being made.
6. Application Statement – Installing three new antennas with no ground work
7. Notarized Statement for Co-location – Existing Facility agreement in place.
8. 24 – Hour Emergency contact- Existing Facility agreement in place.
9. An inventory of the existing structures- Not supplied as this is an existing facility with no substantial changes being made and is just maintenance of equipment.
10. Site Plan – Attached as built. We are using the same ground layout and RAD center that already exists for Sprint.
11. Landscape Plan – Same as #10
12. Elevations- Tower Drawing as existing
13. Materials – included in CX drawings for Sprint 2.5
14. Proposed Signs – N/A no signage being added

APPROVED
By W. Troy Webb at 7:10 pm, Feb 04, 2014

Sprint®

PROJECT:	2.5 EQUIPMENT DEPLOYMENT
SITE NAME:	DUBLIN SCIOTO PARK
SITE CASCADE:	CB03XC026-D
SITE NUMBER:	875268
SITE ADDRESS:	7377 RIVERSIDE DRIVE DUBLIN, OH 43017
SITE TYPE:	100.0' MONOPOLE

SITE INFORMATION

PROPERTY OWNER:
CROWN CASTLE
2000 CORPORATE DRIVE
CANONSBURG, PA 15317

SITE ADDRESS:
7377 RIVERSIDE DRIVE
DUBLIN, OH 43017

GEOGRAPHIC COORDINATES:
LATITUDE: 40° 7' 4.051" N
LONGITUDE: -83° 6' 38.771" W

ZONING JURISDICTION:
CITY OF DUBLIN
614-410-4670

CROWN DISTRICT:
LOUISVILLE

POWER COMPANY:
SOUTHWESTERN ELECTRIC POWER CO
888-218-3919

AAV PROVIDER:
AMERITECH
800-898-0123

AREA MAP

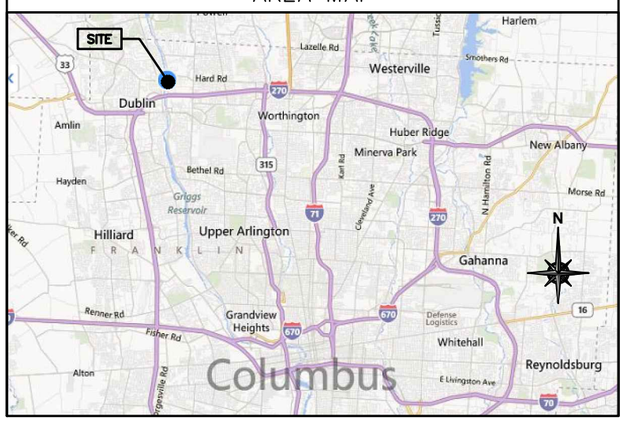

LOCATION MAP

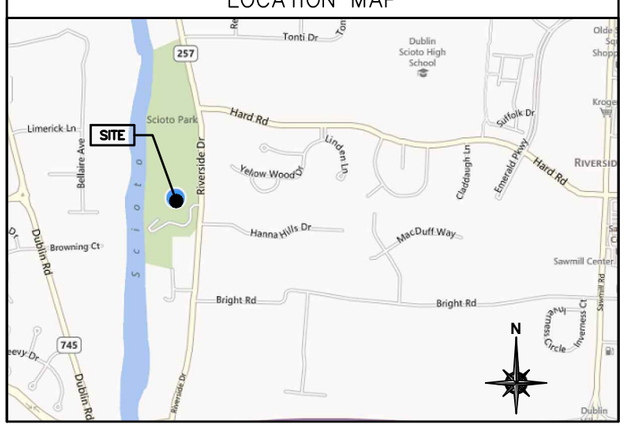

PROJECT DESCRIPTION

* INSTALL BBU KIT ..... (1) UADU
* INSTALL GROWTH CABINET ..... NONE
* INSTALL BBU BATTERIES ..... (4) SAMSUNG
* INSTALL RECTIFIERS ..... NONE
* INSTALL HYBRID CABLE ..... NONE
* INSTALL COAX JUMPERS ..... (27)
* INSTALL POWER JUNCTION CYLINDER ..... (3)
* INSTALL FIBER JUNCTION CYLINDER ..... (3)
* INSTALL 2.5 RRH ..... (3) RRH-V3
* INSTALL 2.5 PANEL ANTENNAS ..... (3) KMW ET-X-WM-18-65-8P

APPLICABLE CODES

* ALL WORK SHALL BE PERFORMED AND MATERIALS INSTALLED IN ACCORDANCE WITH THE FOLLOWING CODES AS ADOPTED BY THE LOCAL GOVERNING AUTHORITIES. NOTHING IN THESE PLANS IS TO BE CONSTRUED TO PERMIT WORK NOT CONFORMING TO THESE CODES.

1. INTERNATIONAL BUILDING CODE
2. ANSI/TIA-222 STRUCTURAL STANDARD FOR ANTENNA STRUCTURES
3. NFPA 780 – LIGHTNING PROTECTION CODE
4. NATIONAL ELECTRIC CODE

811
Know what's **below.**
Call before you dig.
www.call811.com

SHEET INDEX

SHT NO:	SHEET TITLE:	REV:	ENGINEER:
T-1	TITLE SHEET	1	RMW
SP-1	SPRINT SPECIFICATIONS	1	RMW
SP-2	SPRINT SPECIFICATIONS	1	RMW
A-1	SITE PLAN	1	RMW
A-2	TOWER ELEVATIONS & ANTENNA DETAILS	1	RMW
A-3	ANTENNA & HYBRID CABLE DETAILS	1	RMW
A-4	BREAKOUT & EQUIPMENT DETAILS	1	RMW
E-1	GROUNDING DETAILS	1	RMW
E-2	DC POWER DETAILS & PANEL SCHEDULES	1	RMW

PLANS PREPARED FOR:
Sprint
6580 Sprint Parkway
Overland Park,
Kansas 66251

PLANS PREPARED BY:
BENCHMARK SERVICES, INC.
PO Box 5 318 North Main Street
Huntingburg, Indiana 47542
Phone: (812) 683-3049

MLA PARTNER:
CROWN CASTLE INTERNATIONAL

ENGINEERING LICENSE:
STATE OF OHIO
RALPH M. WALLEM
E-67208
REGISTERED PROFESSIONAL ENGINEER

DRAWING NOTICE:
THESE DOCUMENTS ARE CONFIDENTIAL AND ARE THE SOLE PROPERTY OF SPRINT AND MAY NOT BE REPRODUCED, DISSEMINATED OR REDISTRIBUTED WITHOUT THE EXPRESS WRITTEN CONSENT OF SPRINT.

REVISIONS:

DESCRIPTION	DATE	BY	REV
RELEASE FOR REVIEW	01/16/14	JRV	0
100% CD'S	02/03/14	DSB	1

SITE NAME:
DUBLIN SCIOTO PARK

SITE CASCADE:
CB03XC026-D

SITE ADDRESS:
7377 RIVERSIDE DRIVE
DUBLIN, OH 43017

SHEET DESCRIPTION:
TITLE SHEET

SHEET NUMBER:
T-1

Bordered: Template 070214-2: Sprint_2.5_Construction_Plans_CB03XC026_REV1-020314.dwg : Feb 03, 2014, 11:13:14 am

SECTION 01 100 – SCOPE OF WORK

THE WORK:
SHALL COMPLY WITH ALL APPLICABLE ADOPTED CODES AND STANDARDS, AND PORTIONS THEREOF.

PRECEDENCE:
SHOULD CONFLICTS OCCUR BETWEEN THE STANDARD CONSTRUCTION SPECIFICATIONS FOR WIRELESS SITES INCLUDING THE STANDARD CONSTRUCTION DETAILS FOR WIRELESS SITES AND THE CONSTRUCTION DRAWINGS, INFORMATION ON THE CONSTRUCTION DRAWINGS SHALL TAKE PRECEDENCE.

SITE FAMILIARITY:
CONTRACTOR SHALL BE RESPONSIBLE FOR FAMILIARIZING THEMSELVES WITH ALL CONTRACT DOCUMENTS, FIELD CONDITIONS AND DIMENSIONS PRIOR TO PROCEEDING WITH CONSTRUCTION.

ON-SITE SUPERVISION:
THE CONTRACTOR SHALL SUPERVISE AND DIRECT THE WORK AND SHALL BE RESPONSIBLE FOR CONSTRUCTION MEANS, METHODS, TECHNIQUES, SEQUENCES, AND PROCEDURES IN ACCORDANCE WITH THE CONTRACT DOCUMENTS.

DRAWINGS, SPECIFICATIONS AND DETAILS REQUIRED AT JOBSITE:
THE CONSTRUCTION CONTRACTOR SHALL MAINTAIN A FULL SET OF THE CONSTRUCTION DRAWINGS AT THE JOBSITE FROM MOBILIZATION THROUGH CONSTRUCTION COMPLETION.

A. DETAILS ARE INTENDED TO SHOW DESIGN INTENT. PROVIDE ALL MATERIALS AND LABOR AS REQUIRED TO PROVIDE A COMPLETE AND FUNCTIONING SYSTEM. MODIFICATIONS MAY BE REQUIRED TO SUIT JOB DIMENSIONS OR CONDITIONS, AND SUCH MODIFICATIONS SHALL BE INCLUDED AS PART OF THE WORK.

B. CONTRACTOR SHALL NOTIFY SPRINT CONSTRUCTION MANAGER OF ANY VARIATIONS PRIOR TO PROCEEDING WITH THE WORK. DIMENSIONS SHOWN ARE TO FINISH SURFACES UNLESS NOTED OTHERWISE. MODIFICATIONS MAY BE REQUIRED TO SUIT JOB DIMENSIONS OR CONDITIONS, AND SUCH MODIFICATIONS SHALL BE INCLUDED AS PART OF THE WORK.

C. MARK THE FIELD SET OF DRAWINGS IN RED, DOCUMENTING ANY CHANGES FROM THE CONSTRUCTION DOCUMENTS.

METHODS OF PROCEDURE (MOPS) FOR CONSTRUCTION:
CONTRACTOR SHALL PERFORM WORK AS DESCRIBED IN:

A. COAX COLOR CODING SWEEPS AND FIBER TESTING TS-0200 AND EL-0568

B. CABLE LABELING EN-2012-00

C. APPLICABLE INSTALLATION MOPS IDENTIFIED ELSEWHERE IN THE CONTRACT DOCUMENTS

SECTION 01 200 – COMPANY FURNISHED MATERIAL AND EQUIPMENT

A. COMPANY FURNISHED MATERIAL AND EQUIPMENT IS IDENTIFIED ON THE RF DATA SHEET IN THE CONSTRUCTION DRAWINGS.

B. CONTRACTOR IS RESPONSIBLE FOR SPRINT PROVIDED MATERIAL AND EQUIPMENT TO ENSURE IT IS PROTECTED AND HANDLED PROPERLY THROUGHOUT THE CONSTRUCTION DURATION.

C. CONTRACTOR IS RESPONSIBLE FOR RECEIPT OF SPRINT FURNISHED EQUIPMENT AT CELL SITE OR CONTRACTORS LOCATION. CONTRACTOR TO COMPLETE SHIPPING AND RECEIPT DOCUMENTATION IN ACCORDANCE WITH COMPANY PRACTICE.

SECTION 01 300 – CELL SITE CONSTRUCTION

NOTICE TO PROCEED:
NO WORK SHALL COMMENCE PRIOR TO COMPANY'S WRITTEN NOTICE TO PROCEED AND THE ISSUANCE OF WORK ORDER.

SITE CLEANLINESS:
CONTRACTOR SHALL KEEP THE SITE FREE FROM ACCUMULATING WASTE MATERIAL, DEBRIS, AND TRASH. AT THE COMPLETION OF THE WORK, CONTRACTOR SHALL REMOVE FROM THE SITE ALL REMAINING RUBBISH, IMPLEMENTS, TEMPORARY FACILITIES, AND SURPLUS MATERIALS.

SECTION 01 400 – SUBMITTALS & TESTS

ALTERNATES:
AT THE COMPANY'S REQUEST, ANY ALTERNATIVES TO THE MATERIALS OR METHODS SPECIFIED SHALL BE SUBMITTED TO SPRINT'S CONSTRUCTION MANAGER FOR APPROVAL. SPRINT WILL REVIEW AND APPROVE ONLY THOSE REQUESTS MADE IN WRITING. NO VERBAL APPROVALS WILL BE CONSIDERED.

TESTS AND INSPECTIONS:

A. THE CONTRACTOR SHALL BE RESPONSIBLE FOR ALL CONSTRUCTION TESTS, INSPECTIONS AND PROJECT DOCUMENTATION.

B. CONTRACTOR SHALL ACCOMPLISH TESTING INCLUDING BUT NOT LIMITED TO THE FOLLOWING:

1. COAX SWEEPS AND FIBER TESTS PER TS-0200 REV 4 ANTENNA LINE ACCEPTANCE STANDARDS.
2. AGL, AZIMUTH AND DOWNTILT: PROVIDE AN AUTOMATED REPORT UPLOADED TO SITERRA USING A COMMERCIAL MADE-FOR THE PURPOSE ELECTRONIC ANTENNA ALIGNMENT TOOL (AAT). INSTALLED AZIMUTH, CENTERLINE AND DOWNTILT MUST CONFORM WITH RF CONFIGURATION DATA.
3. CONTRACTOR SHALL BE RESPONSIBLE FOR ANY AND ALL CORRECTIONS TO ANY WORK IDENTIFIED AS UNACCEPTABLE IN SITE INSPECTION ACTIVITIES AND/OR AS A RESULT OF TESTING.
4. ALL TESTING REQUIRED BY APPLICABLE INSTALLATION MOPS.

C. REQUIRED CLOSEOUT DOCUMENTATION INCLUDES, BUT IS NOT LIMITED TO THE FOLLOWING;

1. AZIMUTH, DOWNTILT, AGL FROM SUNSIGHT INSTRUMENTS – ANTENNALIGN ALIGNMENT TOOL (AAT).
2. SWEEP AND FIBER TESTS.
3. SCALABLE BARCODE PHOTOGRAPHS OF TOWER TOP AND INACCESSIBLE SERIALIZED EQUIPMENT.
4. ALL AVAILABLE JURISDICTIONAL PERMIT AND OCCUPANCY INFORMATION.
5. PDF SCAN OF REDLINES PRODUCED IN FIELD.
6. A PDF SCAN OF REDLINE MARK-UPS SUITABLE FOR USE IN ELECTRONIC AS-BUILT DRAWING PRODUCTION.
7. LIEN WAIVERS.
8. FINAL PAYMENT APPLICATION.
9. REQUIRED FINAL CONSTRUCTION PHOTOS.
10. CONSTRUCTION AND COMMISSIONING CHECKLIST COMPLETE WITH NO DEFICIENT ITEMS.
11. APPLICABLE POST NTP TASKS INCLUDING DOCUMENT UPLOADS COMPLETED IN SITERRA (SPRINT'S DOCUMENT REPOSITORY OF RECORD).
12. CLOSEOUT PHOTOGRAPHS AND CLOSEOUT CHECKLIST: SPRINT WILL PROVIDE SEPARATE GUIDANCE.

SECTION 11 700 – ANTENNA ASSEMBLY, REMOTE RADIO UNITS AND CABLE INSTALLATION

SUMMARY:
THIS SECTION SPECIFIES INSTALLATION OF ANTENNAS, RRU'S, AND CABLE EQUIPMENT, INSTALLATION, AND TESTING OF COAXIAL FIBER CABLE.

ANTENNAS AND RRU'S:
THE NUMBER AND TYPE OF ANTENNAS AND RRU'S TO BE INSTALLED IS DETAILED ON THE CONSTRUCTION DRAWINGS.

HYBRID CABLE:
HYBRID CABLE WILL BE DC/FIBER AND FURNISHED FOR INSTALLATION AT EACH SITE. CABLE SHALL BE INSTALLED PER THE CONSTRUCTION DRAWINGS AND THE APPLICABLE MANUFACTURER'S REQUIREMENTS.

JUMPERS AND CONNECTORS:
FURNISH AND INSTALL 1/2" COAX JUMPER CABLES BETWEEN THE RRU'S AND ANTENNAS. JUMPERS SHALL BE TYPE LDF 4, FLC 12-50, CR 540, OR FXL 540. SUPER-FLEX CABLES ARE NOT ACCEPTABLE. JUMPERS BETWEEN THE RRU'S AND ANTENNAS OR TOWER TOP AMPLIFIERS SHALL CONSIST OF 1/2 INCH FOAM DIELECTRIC, OUTDOOR RATED COAXIAL CABLE, MIN. LENGTH FOR JUMPER SHALL BE 10"-0".

REMOTE ELECTRICAL TILT (RET) CABLES:

MISCELLANEOUS:
INSTALL SPLITTERS, COMBINERS, FILTERS PER RF DATA SHEET, FURNISHED BY SPRINT.

ANTENNA INSTALLATION:
THE CONTRACTOR SHALL ASSEMBLE ALL ANTENNAS ONSITE IN ACCORDANCE WITH THE INSTRUCTIONS SUPPLIED BY THE MANUFACTURER. ANTENNA HEIGHT, AZIMUTH, AND FEED ORIENTATION INFORMATION SHALL BE A DESIGNATED ON THE CONSTRUCTION DRAWINGS.

A. THE CONTRACTOR SHALL POSITION THE ANTENNA ON TOWER PIPE MOUNTS SO THAT THE BOTTOM STRUT IS LEVEL. THE PIPE MOUNTS SHALL BE PLUMB TO WITHIN 1 DEGREE.

B. ANTENNA MOUNTING REQUIREMENTS: PROVIDE ANTENNA MOUNTING HARDWARE AS INDICATED ON THE DRAWINGS.

HYBRID CABLE INSTALLATION:

A. THE CONTRACTOR SHALL ROUTE, TEST, AND INSTALL ALL CABLES AS INDICATED ON THE CONSTRUCTION DRAWINGS AND IN ACCORDANCE WITH THE MANUFACTURER'S RECOMMENDATIONS.

B. THE INSTALLED RADIUS OF THE CABLES SHALL NOT BE LESS THAN THE MANUFACTURER'S SPECIFICATIONS FOR BENDING RADII.

C. EXTREME CARE SHALL BE TAKEN TO AVOID DAMAGE TO THE CABLES DURING HANDLING AND INSTALLATION.

1. FASTENING MAIN HYBRID CABLES: ALL CABLES SHALL BE INSTALLED INSIDE MONOPOLE WITH CABLE SUPPORT GRIPS AS REQUIRED BY THE MANUFACTURER.
2. FASTENING INDIVIDUAL FIBER AND DC CABLES ABOVE BREAKOUT ENCLOSURE (MEDUSA), WITHIN THE MMBS CABINET AND ANY INTERMEDIATE DISTRIBUTION BOXES:
   a. FIBER: SUPPORT FIBER BUNDLES USING 1/2" VELCRO STRAPS OF THE REQUIRED LENGTH AT 18" O.C. STRAPS SHALL BE UV, OIL AND WATER RESISTANT AND SUITABLE FOR INDUSTRIAL INSTALLATIONS AS MANUFACTURED BY TEXTOL OR APPROVED EQUAL.
   b. DC: SUPPORT DC BUNDLES WITH ZIP TIES OF THE ADEQUATE LENGTH. ZIP TIES TO BE UV STABILIZED, BLACK NYLON, WITH TENSILE STRENGTH AT 12,000 PSI AS MANUFACTURED BY NELCO PRODUCTS OR EQUAL.
3. FASTENING JUMPERS: SECURE JUMPERS TO THE SIDE ARMS OR HEAD FRAMES USING STAINLESS STEEL TIE WRAPS OR STAINLESS STEEL BUTTERFLY CLIPS.
4. CABLE INSTALLATION:
   a. INSPECT CABLE PRIOR TO USE FOR SHIPPING DAMAGE, NOTIFY THE CONSTRUCTION MANAGER.
   b. CABLE ROUTING: CABLE INSTALLATION SHALL BE PLANNED TO ENSURE THAT THE LINES WILL BE PROPERLY ROUTED IN THE CABLE ENVELOP AS INDICATED ON THE DRAWINGS. AVOID TWISTING AND CROSSOVERS.
   c. HOIST CABLE USING PROPER HOISTING GRIPS. DO NOT EXCEED MANUFACTURER'S RECOMMENDED MAXIMUM BEND RADIUS.
5. GROUNDING OF TRANSMISSION LINES: ALL TRANSMISSION LINES SHALL BE GROUNDED AS INDICATED ON DRAWINGS.
6. HYBRID CABLE COLOR CODING: ALL COLOR CODING SHALL BE AS REQUIRED IN TS 0200 REV 5.
7. HYBRID CABLE LABELING: INDIVIDUAL HYBRID AND DC BUNDLES SHALL BE LABELED ALPHA-NUMERICALLY ACCORDING TO SPRINT CELL SITE ENGINEERING NOTICE – EN 2012-001, REV 1

WEATHERPROOFING EXTERIOR CONNECTORS AND HYBRID CABLE GROUND KITS:

A. ALL FIBER & COAX CONNECTORS AND GROUND KITS SHALL BE WEATHERPROOFED.

B. WEATHERPROOFED USING ONE OF THE FOLLOWING METHODS. ALL INSTALLATIONS MUST BE DONE IN ACCORDANCE WITH THE MANUFACTURER'S RECOMMENDATIONS AND INDUSTRY BEST PRACTICES.

1. COLD SHRINK: ENCOMPASS CONNECTOR IN COLD SHRINK TUBING AND PROVIDE A DOUBLE WRAP OF 2" ELECTRICAL TAPE EXTENDING 2" BEYOND TUBING. PROVIDE 3M COLD SHRINK CXS SERIES OR EQUAL.
2. SELF-AMALGAMATING TAPE: CLEAN SURFACES. APPLY A DOUBLE WRAP OF SELF-AMALGAMATING TAPE 2" BEYOND CONNECTOR. APPLY A SECOND WRAP OF SELF-AMALGAMATING TAPE IN OPPOSITE DIRECTION. APPLY DOUBLE WRAP OF 2" WIDE ELECTRICAL TAPE EXTENDING 2" BEYOND THE SELF-AMALGAMATING TAPE.
3. 3M SLIM LOCK CLOSURE 716: SUBSTITUTIONS WILL NOT BE ALLOWED.
4. OPEN FLAME ON JOB SITE IS NOT ACCEPTABLE

PLANS PREPARED FOR:

Sprint
6580 Sprint Parkway
Overland Park,
Kansas 66251

PLANS PREPARED BY:

BENCHMARK SERVICES, INC.
PO Box 5 318 North Main Street
Huntingburg, Indiana 47542
Phone: (812) 683-3049

MLA PARTNER:

CROWN CASTLE INTERNATIONAL

ENGINEERING LICENSE:

STATE OF OHIO
RALPH M. WALLEM
E-67208
REGISTERED
PROFESSIONAL ENGINEER

DRAWING NOTICE:

THESE DOCUMENTS ARE CONFIDENTIAL AND ARE THE SOLE PROPERTY OF SPRINT AND MAY NOT BE REPRODUCED, DISSEMINATED OR REDISTRIBUTED WITHOUT THE EXPRESS WRITTEN CONSENT OF SPRINT.

REVISIONS:

DESCRIPTION	DATE	BY	REV
RELEASE FOR REVIEW	01/16/14	JRV	0
100% CD'S	02/03/14	DSB	1

SITE NAME:
DUBLIN SCIOTO PARK

SITE CASCADE:
CB03XC026-D

SITE ADDRESS:
7377 RIVERSIDE DRIVE
DUBLIN, OH 43017

SHEET DESCRIPTION:
SPRINT SPECIFICATIONS

SHEET NUMBER:
SP-1

Bordenet Template 010214-2: Sprint_2.5_Construction_Plans_CB03XC026_[REV1-020314].dwg : Feb 03, 2014, 11:13:15 am

SECTION 11 800 – INSTALLATION OF MULTIMODAL BASE STATIONS (MMBS) AND RELATED EQUIPMENT

SUMMARY:

A. THIS SECTION SPECIFIES MMBS CABINETS, POWER CABINETS, AND INTERNAL EQUIPMENT INCLUDING BY NOT LIMITED TO RECTIFIERS, POWER DISTRIBUTION UNITS, BASE BAND UNITS, SURGE ARRESTORS, BATTERIES, AND SIMILAR EQUIPMENT FURNISHED BY THE COMPANY FOR INSTALLATION BY THE CONTRACTOR (OFCI).

B. CONTRACTOR SHALL PROVIDE AND INSTALL ALL MISCELLANEOUS MATERIALS AND PROVIDE ALL LABOR REQUIRED FOR INSTALLATION EQUIPMENT IN EXISTING CABINET OR NEW CABINET AS SHOWN ON DRAWINGS AND AS REQUIRED BY THE APPLICABLE INSTALLATION MOPS.

C. COMPLY WITH MANUFACTURER'S INSTALLATION AND START–UP REQUIREMENTS.

DC CIRCUIT BREAKER LABELING

A. NEW DC CIRCUIT IS REQUIRED IN MMBS CABINET SHALL BE CLEARLY IDENTIFIED AS TO RRU BEING SERVICED.

SECTION 26 100 – BASIC ELECTRICAL REQUIREMENTS

SUMMARY:
THIS SECTION SPECIFIES BASIC ELECTRICAL REQUIREMENTS FOR SYSTEMS AND COMPONENTS.

QUALITY ASSURANCE:

A. ALL EQUIPMENT FURNISHED UNDER DIVISION 26 SHALL CARRY UL LABELS AND LISTINGS WHERE SUCH LABELS AND LISTINGS ARE AVAILABLE IN THE INDUSTRY.

B. MANUFACTURERS OF EQUIPMENT SHALL HAVE A MINIMUM OF THREE YEARS EXPERIENCE WITH THEIR EQUIPMENT INSTALLED AND OPERATING IN THE FIELD IN A USE SIMILAR TO THE PROPOSED USE FOR THIS PROJECT.

C. MATERIALS AND EQUIPMENT: ALL MATERIALS AND EQUIPMENT SPECIFIED IN DIVISION 26 OF THE SAME TYPE SHALL BE OF THE SAME MANUFACTURER AND SHALL BE NEW, OF THE BEST QUALITY AND DESIGN, AND FREE FROM DEFECTS.

SUPPORTING DEVICES:

A. MANUFACTURED STRUCTURAL SUPPORT MATERIALS: SUBJECT TO COMPLIANCE WITH REQUIREMENTS, PROVIDE PRODUCTS BY THE FOLLOWING:

1. ALLIED TUBE AND CONDUIT.
2. B–LINE SYSTEM.
3. UNISTRUT DIVERSIFIED PRODUCTS.
4. THOMAS & BETTS.

B. FASTENERS: TYPES, MATERIALS, AND CONSTRUCTION FEATURES AS FOLLOWS:

1. EXPANSION ANCHORS: CARBON STEEL WEDGE OR SLEEVE TYPE.
2. POWER–DRIVEN THREADED STUDS: HEAT–TREATED STEEL, DESIGNED SPECIFICALLY FOR THE INTENDED SERVICE.
3. FASTEN BY MEANS OF WOOD SCREWS ON WOOD.
4. TOGGLE BOLTS ON HOLLOW MASONRY UNITS.
5. CONCRETE INSERTS OR EXPANSION BOLTS ON CONCRETE OR SOLID MASONRY.
6. MACHINE SCREWS, WELDED THREADED STUDS, OR SPRING–TENSION CLAMPS ON STEEL.
7. EXPLOSIVE DEVICES FOR ATTACHING HANGERS TO STRUCTURE SHALL NOT BE PERMITTED.
8. DO NOT WELD CONDUIT, PIPE STRAPS, OR ITEMS OTHER THAN THREADED STUDS TO STEEL STRUCTURES.
9. IN PARTITIONS OF LIGHT STEEL CONSTRUCTION, USE SHEET METAL SCREWS.

SUPPORTING DEVICES:

A. INSTALL SUPPORTING DEVICES TO FASTEN ELECTRICAL COMPONENTS SECURELY AND PERMANENTLY IN ACCORDANCE WITH NEC.

B. COORDINATE WITH THE BUILDING STRUCTURAL SYSTEM AND WITH OTHER TRADES.

C. UNLESS OTHERWISE INDICATED ON THE DRAWINGS, FASTEN ELECTRICAL ITEMS AND THEIR SUPPORTING HARDWARE SECURELY TO THE STRUCTURE IN ACCORDANCE WITH THE FOLLOWING:

1. ENSURE THAT THE LOAD APPLIED BY ANY FASTENER DOES NOT EXCEED 25 PERCENT OF THE PROOF TEST LOAD.
2. USE VIBRATION AND SHOCK–RESISTANT FASTENERS FOR ATTACHMENTS TO CONCRETE SLABS.

ELECTRICAL IDENTIFICATION:

A. UPDATE AND PROVIDE TYPED CIRCUIT BREAKER SCHEDULES IN THE MOUNTING BRACKET, INSIDE DOORS OF AC PANEL BOARDS WITH ANY CHANGES MADE TO THE AC SYSTEM.

B. BRANCH CIRCUITS FEEDING AVIATION OBSTRUCTION LIGHTING EQUIPMENT SHALL BE CLEARLY IDENTIFIED AS SUCH AT THE BRANCH CIRCUIT PANELBOARD.

SECTION 26 200 – ELECTRICAL MATERIALS AND EQUIPMENT

CONDUIT:

A. RIGID GALVANIZED STEEL (RGS) CONDUIT SHALL BE USED FOR EXTERIOR LOCATIONS ABOVE GROUND AND IN UNFINISHED INTERIOR LOCATIONS AND FOR UNDERGROUND RUNS. RIGID CONDUIT AND FITTINGS SHALL BE STEEL, COATED WITH ZINC EXTERIOR AND INTERIOR BY THE HOT DIP GALVANIZING PROCESS. CONDUIT SHALL BE PRODUCED TO ANSI SPECIFICATIONS C80.1, FEDERAL SPECIFICATION WW–C–581 AND SHALL BE LISTED WITH THE UNDERWRITERS' LABORATORIES. FITTINGS SHALL BE THREADED – SET SCREW OR COMPRESSION FITTINGS WILL NOT BE ACCEPTABLE. RGS CONDUITS SHALL BE MANUFACTURED BY ALLIED, REPUBLIC OR WHEATLAND.

B. UNDERGROUND CONDUIT IN CONCRETE SHALL BE POLYVINYLCHLORIDE (PVC) SUITABLE FOR DIRECT BURIAL AS APPLICABLE. JOINTS SHALL BE BELLED, AND FLUSH SOLVENT WELDED IN ACCORDANCE WITH MANUFACTURER'S INSTRUCTIONS. CONDUIT SHALL BE CARLON ELECTRICAL PRODUCTS OR APPROVED EQUAL.

C. TRANSITIONS BETWEEN PVC AND RIGID (RGS) SHALL BE MADE WITH PVC COATED METALLIC LONG SWEEP RADIUS ELBOWS.

D. EMT OR RIGID GALVANIZED STEEL CONDUIT MAY BE USED IN FINISHED SPACES CONCEALED IN WALLS AND CEILINGS. EMT SHALL BE MILD STEEL, ELECTRICALLY WELDED, ELECTRO–GALVANIZED OR HOT–DIPPED GALVANIZED AND PRODUCED TO ANSI SPECIFICATION C80.3, FEDERAL SPECIFICATION WW–C–563, AND SHALL BE UL LISTED. EMT SHALL BE MANUFACTURED BY ALLIED, REPUBLIC OR WHEATLAND, OR APPROVED EQUAL. FITTINGS SHALL BE METALLIC COMPRESSION. SET SCREW CONNECTIONS SHALL NOT BE ACCEPTABLE.

E. LIQUID TIGHT FLEXIBLE METALLIC CONDUIT SHALL BE USED FOR FINAL CONNECTION TO EQUIPMENT. FITTINGS SHALL BE METALLIC GLAND TYPE COMPRESSION FITTINGS, MAINTAINING THE INTEGRITY OF CONDUIT SYSTEM. SET SCREW CONNECTIONS SHALL NOT BE ACCEPTABLE. MAXIMUM LENGTH OF FLEXIBLE CONDUIT SHALL NOT EXCEED 6–FEET. LFMC SHALL BE PROTECTED AND SUPPORTED AS REQUIRED BY NEC. MANUFACTURERS OF FLEXIBLE CONDUITS SHALL BE CAROL, ANACONDA METAL HOSE OR UNIVERSAL METAL HOSE, OR APPROVED EQUAL.

F. MINIMUM SIZE CONDUIT SHALL BE 3/4 INCH (21MM).

HUBS AND BOXES:

A. AT ENTRANCES TO CABINETS OR OTHER EQUIPMENT NOT HAVING INTEGRAL THREADED HUBS PROVIDE METALLIC THREADED HUBS OF THE SIZE AND CONFIGURATION REQUIRED. HUB SHALL INCLUDE LOCKNUT AND NEOPRENE O–RING SEAL. PROVIDE IMPACT RESISTANT 105 DEGREE C PLASTIC BUSHINGS TO PROTECT CABLE INSULATION.

B. CABLE TERMINATION FITTINGS FOR CONDUIT

1. CABLE TERMINATORS FOR RGS CONDUITS SHALL BE TYPE CRC BY O–Z/GEDNEY OR EQUAL BY ROXTEC.
2. CABLE TERMINATORS FOR LFMC SHALL BE ETCO – CL2075; OR MADE FOR THE PURPOSE PRODUCTS BY ROXTEC.

C. EXTERIOR PULL BOXES AND PULL BOXES IN INTERIOR INDUSTRIAL AREAS SHALL BE PLATED CAST ALLOY, HEAVY DUTY, WEATHERPROOF, DUST PROOF, WITH GASKET, PLATED IRON ALLOY COVER AND STAINLESS STEEL COVER SCREWS, CROUSE–HINDS WAB SERIES OR EQUAL.

D. CONDUIT OUTLET BODIES SHALL BE PLATED CAST ALLOY WITH SIMILAR GASKET COVERS. OUTLET BODIES SHALL BE OF THE CONFIGURATION AND SIZE SUITABLE FOR THE APPLICATION. PROVIDE CROUSE–HINDS FORM 8 OR EQUAL.

E. MANUFACTURER FOR BOXES AND COVERS SHALL BE HOFFMAN, SQUARE "D", CROUSE–HINDS, COOPER, ADALET, APPLETON, O–Z GEDNEY, RACO, OR APPROVED EQUAL.

SUPPLEMENTAL GROUNDING SYSTEM:

A. FURNISH AND INSTALL A SUPPLEMENTAL GROUNDING SYSTEM TO THE EXTENT INDICATED ON THE DRAWINGS. SUPPORT SYSTEM WITH NON–MAGNETIC STAINLESS STEEL CLIPS WITH RUBBER GROMMETS. GROUNDING CONNECTORS SHALL BE TINNED COPPER WIRE, SIZES AS INDICATED ON THE DRAWINGS. PROVIDE STRANDED OR SOLID BARE OR INSULATED CONDUCTORS EXCEPT AS OTHERWISE NOTED.

B. SUPPLEMENTAL GROUNDING SYSTEM: ALL CONNECTIONS TO BE MADE WITH CAD WELDS, EXCEPT AT EQUIPMENT USE LUGS OR OTHER AVAILABLE GROUNDING MEANS AS REQUIRED BY MANUFACTURER; AT GROUND BARS USE TWO HOLE SPADES WITH NO–OX.

C. STOLEN GROUND–BARS: IN THE EVENT OF STOLEN GROUND BARS, CONTACT SPRINT CM FOR REPLACEMENT INSTRUCTION USING THREADED ROD KITS.

EXISTING STRUCTURE:

A. EXISTING EXPOSED WIRING AND ALL EXPOSED OUTLETS, RECEPTACLES, SWITCHES, DEVICES, BOXES, AND OTHER EQUIPMENT THAT ARE NOT TO BE UTILIZED IN THE COMPLETED PROJECT SHALL BE REMOVED OR DE–ENERGIZED AND CAPPED IN THE WALL, CEILING, OR FLOOR SO THAT THEY ARE CONCEALED AND SAFE. WALL, CEILING, OR FLOOR SHALL BE PATCHED TO MATCH THE ADJACENT CONSTRUCTION.

CONDUIT AND CONDUCTOR INSTALLATION:

A. CONDUITS SHALL BE FASTENED SECURELY IN PLACE WITH APPROVED NON–PERFORATED STRAPS AND HANGERS. EXPLOSIVE DEVICES FOR ATTACHING HANGERS TO STRUCTURE WILL NOT BE PERMITTED. CLOSELY FOLLOW THE LINES OF THE STRUCTURE, MAINTAIN CLOSE PROXIMITY TO THE STRUCTURE AND KEEP CONDUITS IN TIGHT ENVELOPES. CHANGES IN DIRECTION TO ROUTE AROUND OBSTACLES SHALL BE MADE WITH CONDUIT OUTLET BODIES. CONDUIT SHALL BE INSTALLED IN A NEAT AND WORKMANLIKE MANNER, PARALLEL AND PERPENDICULAR TO STRUCTURE WALL AND CEILING LINES. ALL CONDUIT SHALL BE FISHED TO CLEAR OBSTRUCTIONS. ENDS OF CONDUITS SHALL BE TEMPORARILY CAPPED TO PREVENT CONCRETE, PLASTER OR DIRT FROM ENTERING. CONDUITS SHALL BE RIGIDLY CLAMPED TO BOXES BY GALVANIZED MALLEABLE IRON BUSHING ON INSIDE AND GALVANIZED MALLEABLE IRON LOCKNUT ON OUTSIDE AND INSIDE.

B. CONDUCTORS SHALL BE PULLED IN ACCORDANCE WITH ACCEPTED GOOD PRACTICE.

PLANS PREPARED FOR:

Sprint
6580 Sprint Parkway
Overland Park,
Kansas 66251

PLANS PREPARED BY:

BENCHMARK SERVICES, INC.
PO Box 5 318 North Main Street
Huntingburg, Indiana 47542
Phone: (812) 683-3049

MLA PARTNER:

CROWN CASTLE INTERNATIONAL

ENGINEERING LICENSE:

STATE OF OHIO
RALPH M. WALLEM
E-67208
REGISTERED PROFESSIONAL ENGINEER

DRAWING NOTICE:

THESE DOCUMENTS ARE CONFIDENTIAL AND ARE THE SOLE PROPERTY OF SPRINT AND MAY NOT BE REPRODUCED, DISSEMINATED OR REDISTRIBUTED WITHOUT THE EXPRESS WRITTEN CONSENT OF SPRINT.

REVISIONS:

DESCRIPTION	DATE	BY	REV
RELEASE FOR REVIEW	01/16/14	JRV	0
100% CD'S	02/03/14	DSB	1

SITE NAME:

DUBLIN SCIOTO PARK

SITE CASCADE:

CB03XC026-D

SITE ADDRESS:

7377 RIVERSIDE DRIVE
DUBLIN, OH 43017

SHEET DESCRIPTION:

SPRINT SPECIFICATIONS

SHEET NUMBER:

SP-2

Bordered Template 010214-2: Sprint_2.5_Construction_Phase_CB03XC026_REV1-020314.dwg : Feb 03, 2014, 11:13:16 am

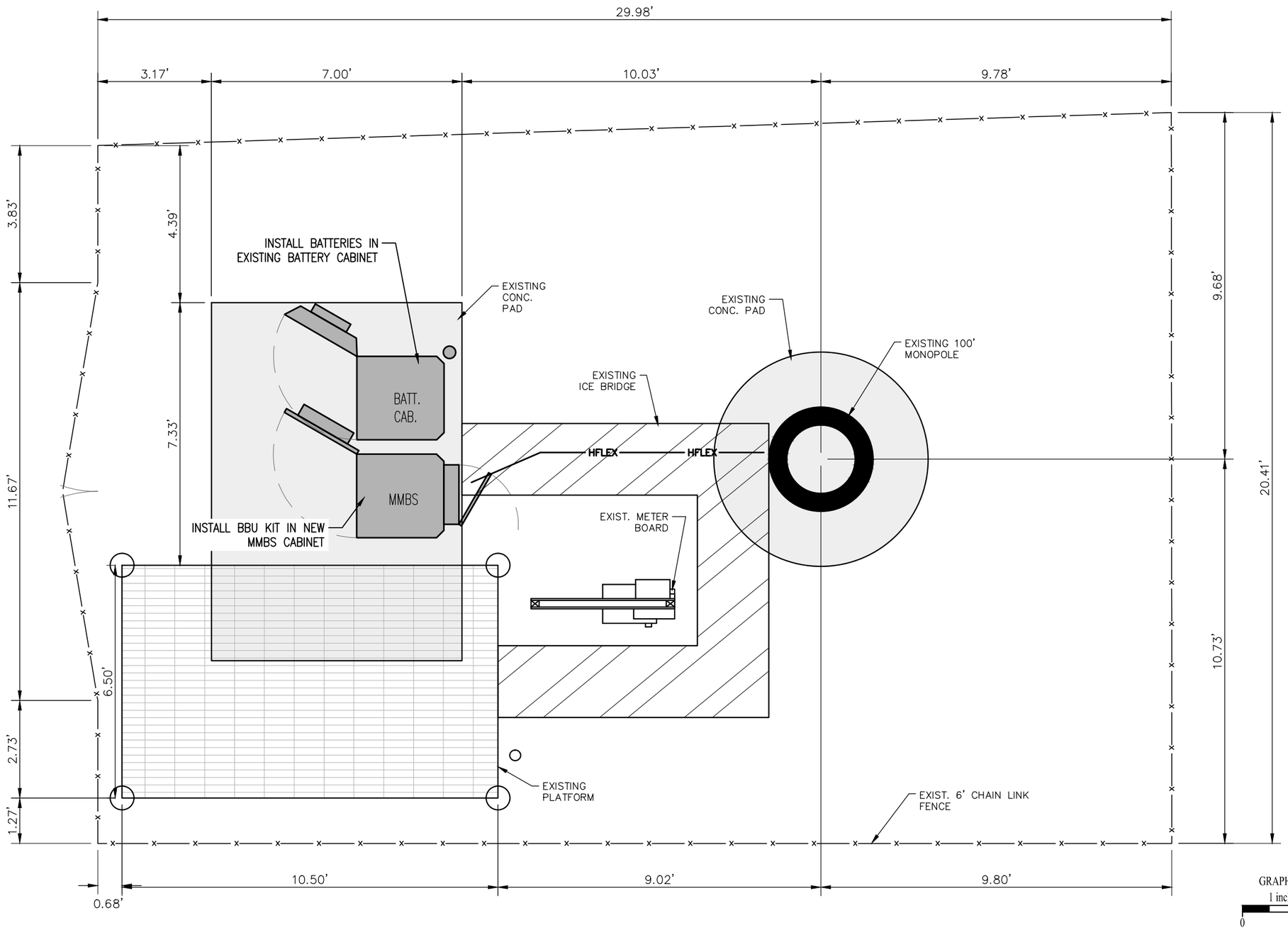

SITE PLAN

SEE GRAPHIC SCALE BAR AND LABEL

1

PLANS PREPARED FOR:

Sprint
6580 Sprint Parkway
Overland Park,
Kansas 66251

PLANS PREPARED BY:

BENCHMARK SERVICES, INC.
PO Box 5 318 North Main Street
Huntingburg, Indiana 47542
Phone: (812) 683-3049

MLA PARTNER:

CROWN CASTLE INTERNATIONAL

ENGINEERING LICENSE:

STATE OF OHIO
RALPH M. WALLEM
E-67208
REGISTERED
PROFESSIONAL ENGINEER

DRAWING NOTICE:

THESE DOCUMENTS ARE CONFIDENTIAL AND ARE THE SOLE PROPERTY OF SPRINT AND MAY NOT BE REPRODUCED, DISSEMINATED OR REDISTRIBUTED WITHOUT THE EXPRESS WRITTEN CONSENT OF SPRINT.

REVISIONS:

DESCRIPTION	DATE	BY	REV
RELEASE FOR REVIEW	01/16/14	JRV	0
100% CD'S	02/03/14	DSB	1

SITE NAME:

DUBLIN SCIOTO PARK

SITE CASCADE:

CB03XC026-D

SITE ADDRESS:

7377 RIVERSIDE DRIVE
DUBLIN, OH 43017

SHEET DESCRIPTION:

SITE PLAN

SHEET NUMBER:

A-1

Bentleyset Template 010214-2: Sprint 2.5 Construction (Plans_CB03XC026_REV1-020314).dwg : Feb 03, 2014, 11:13:18 am

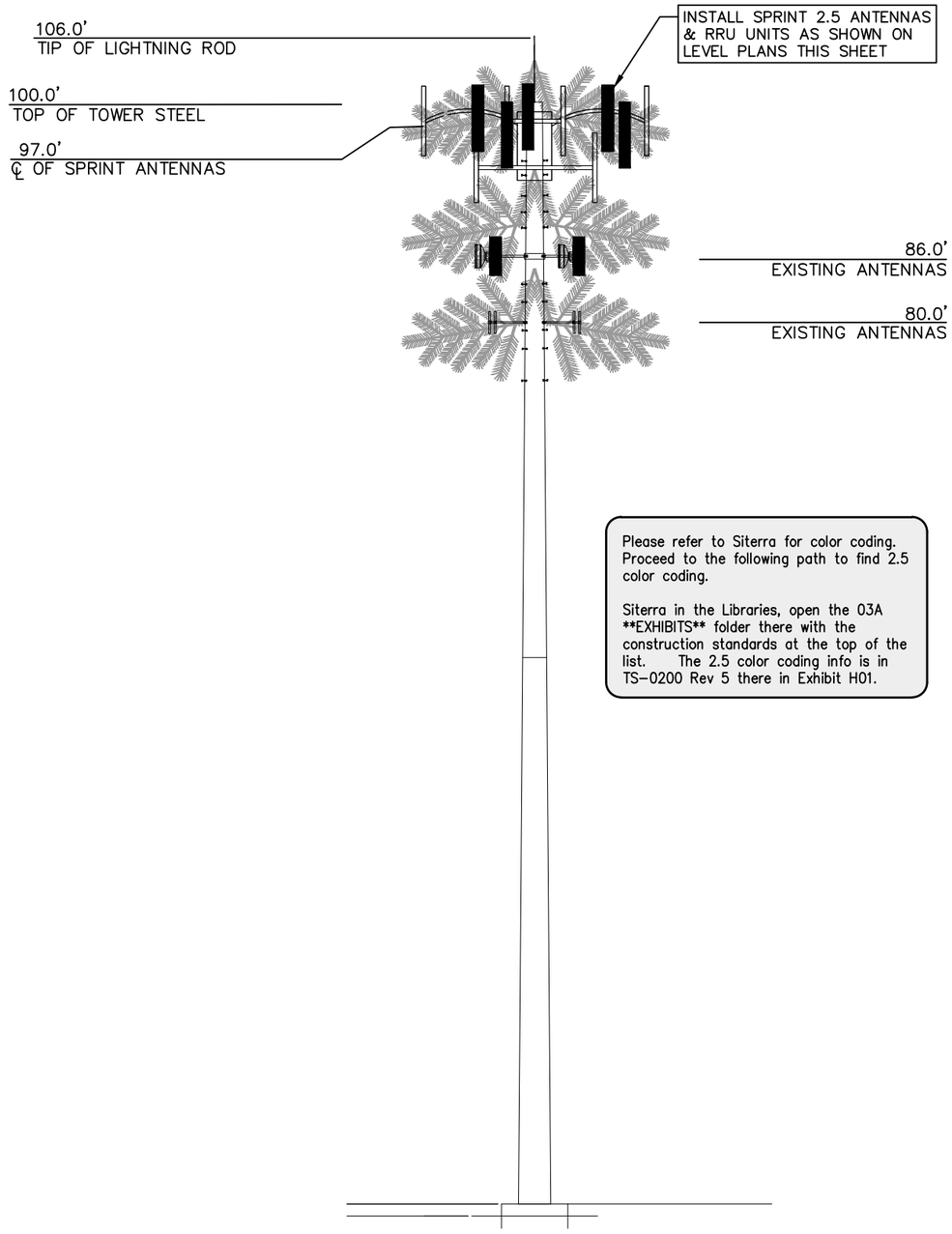

Please refer to Siterra for color coding. Proceed to the following path to find 2.5 color coding.

Siterra in the Libraries, open the 03A **EXHIBITS** folder there with the construction standards at the top of the list. The 2.5 color coding info is in TS-0200 Rev 5 there in Exhibit H01.

FINAL TOWER ELEVATION

SCALE: N.T.S.

1

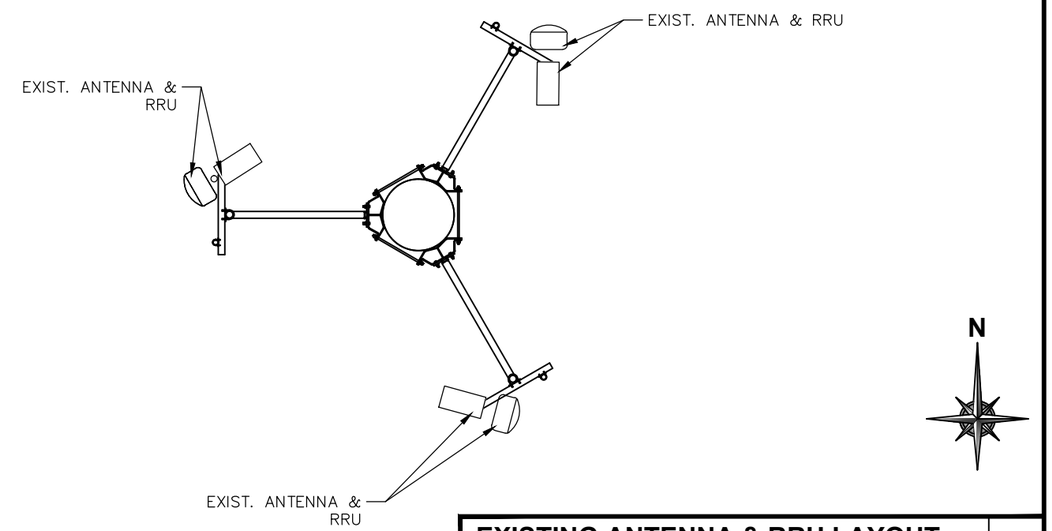

EXISTING ANTENNA & RRU LAYOUT

SCALE: N.T.S.

2

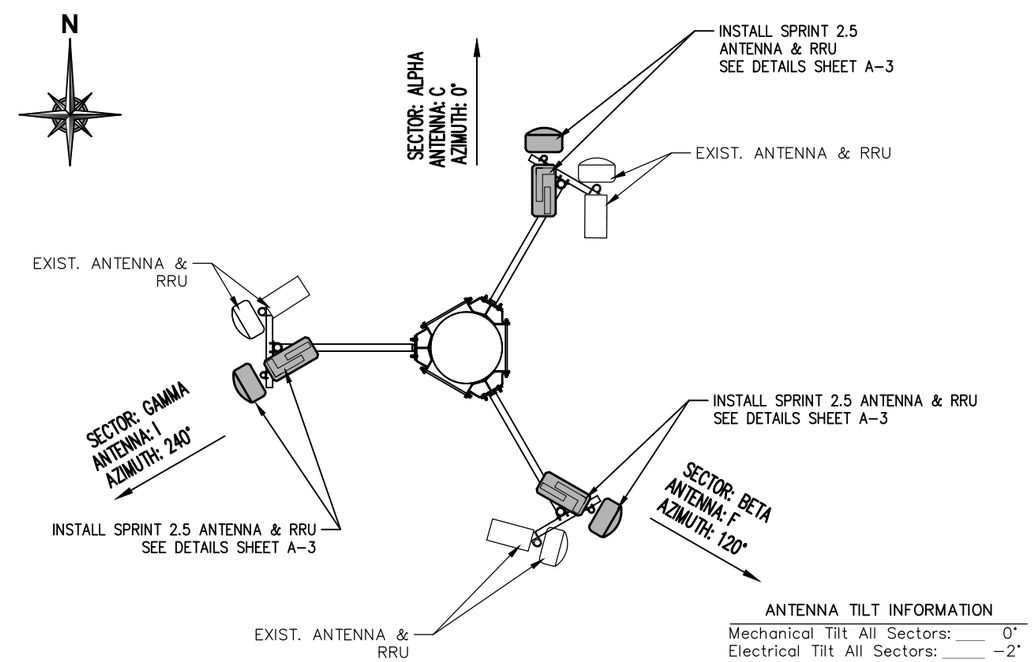

ANTENNA TILT INFORMATION

Mechanical Tilt All Sectors: ____ 0°
Electrical Tilt All Sectors: _____ -2°

This tower has been evaluated by SELECTIVE SITE CONSULTANTS on December 6th, 2013. No structural improvements are required.

FINAL ANTENNA & RRU LAYOUT

SCALE: N.T.S.

3

PLANS PREPARED FOR:

Sprint
6580 Sprint Parkway
Overland Park,
Kansas 66251

PLANS PREPARED BY:

BENCHMARK SERVICES, INC.
PO Box 5 318 North Main Street
Huntingburg, Indiana 47542
Phone: (812) 683-3049

MLA PARTNER:

CROWN CASTLE INTERNATIONAL

ENGINEERING LICENSE:

STATE OF OHIO
RALPH M. WALLEM
E-67208
REGISTERED
PROFESSIONAL ENGINEER

DRAWING NOTICE:

THESE DOCUMENTS ARE CONFIDENTIAL AND ARE THE SOLE PROPERTY OF SPRINT AND MAY NOT BE REPRODUCED, DISSEMINATED OR REDISTRIBUTED WITHOUT THE EXPRESS WRITTEN CONSENT OF SPRINT.

REVISIONS:

DESCRIPTION	DATE	BY	REV
RELEASE FOR REVIEW	01/16/14	JRV	0
100% CD'S	02/03/14	DSB	1

SITE NAME:

DUBLIN SCIOTO PARK

SITE CASCADE:

CB03XC026-D

SITE ADDRESS:

7377 RIVERSIDE DRIVE
DUBLIN, OH 43017

SHEET DESCRIPTION:

TOWER ELEVATIONS & ANTENNA DETAILS

SHEET NUMBER:

A-2

Bordered Template 070214-2: Sprint 2.5 Construction Plans_CB03XC026_(REV1-020314).dwg : Feb 03, 2014, 11:13:21 am

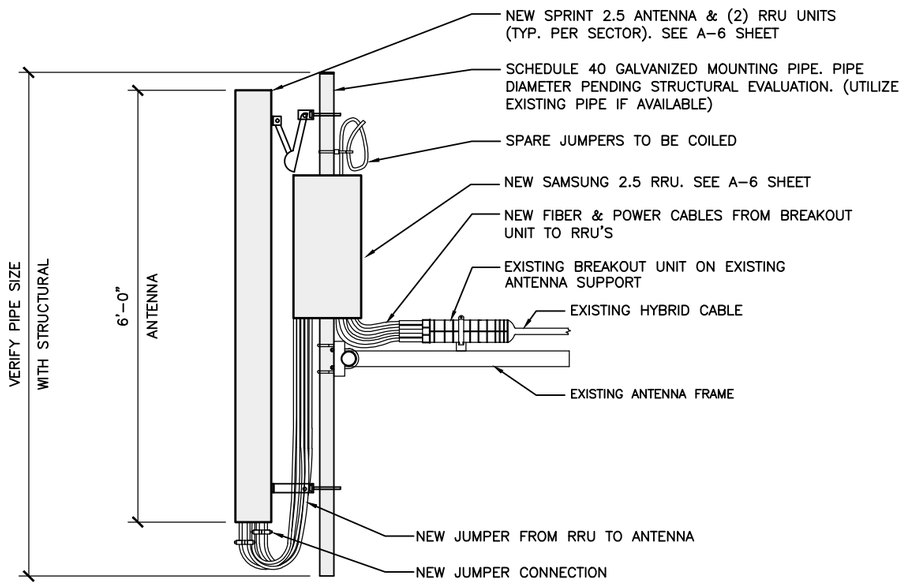

ANTENNA MOUNT DETAIL

SCALE: N.T.S.

1

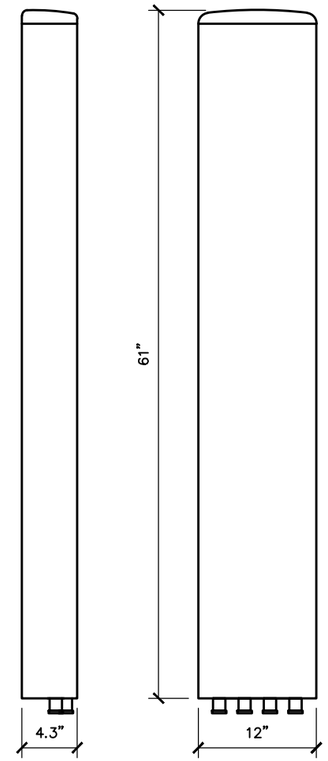

KMW ANTENNA
ET-X-WM-18-65-8P

DIMENSIONS, HxWxD:	1829x300x150mm (61"x12"x4.3")
WEIGHT, WITH PRE-MOUNTED BRACKETS:	36.4 lbs
CONNECTOR:	8 x MINI DIN(Female), 1 Calibration Port(N type, Female) / Bottom

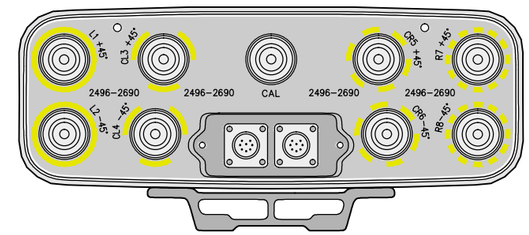

2.5 ANTENNA DETAIL

SCALE: N.T.S.

2

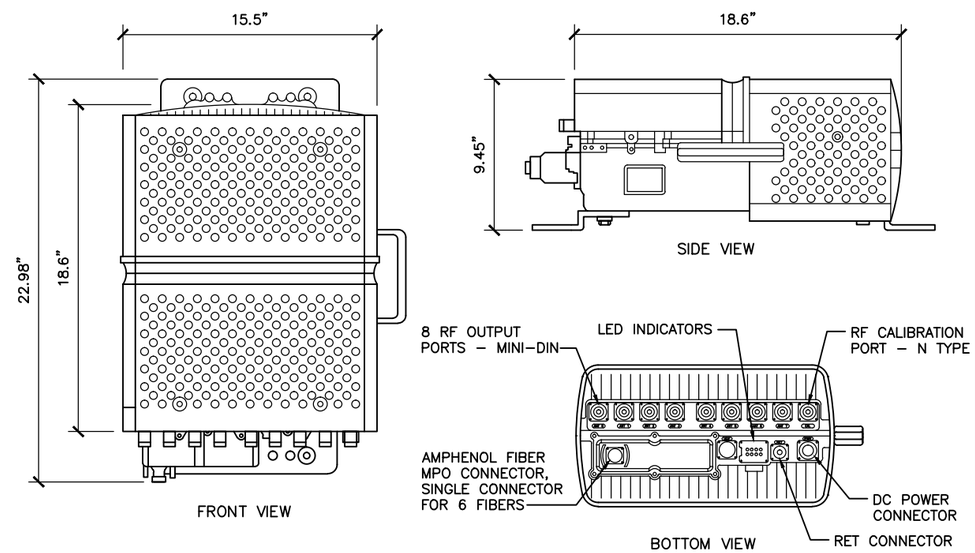

DIMENSIONS, HxWxD:	(18.6"x15.5"x9.45")
RRU WEIGHT:	59.5 lbs
MOUNTING KIT WEIGHT:	12.32 lbs

2.5 RRU DETAIL

SCALE: N.T.S.

3

NOT USED

SCALE: N.T.S.

4

PLANS PREPARED FOR:

Sprint
6580 Sprint Parkway
Overland Park,
Kansas 66251

PLANS PREPARED BY:

BENCHMARK SERVICES, INC.
PO Box 5 318 North Main Street
Huntingburg, Indiana 47542
Phone: (812) 683-3049

MLA PARTNER:

CROWN CASTLE INTERNATIONAL

ENGINEERING LICENSE:

STATE OF OHIO
RALPH M. WALLEM
E-67208
REGISTERED
PROFESSIONAL ENGINEER

DRAWING NOTICE:

THESE DOCUMENTS ARE CONFIDENTIAL AND ARE THE SOLE PROPERTY OF SPRINT AND MAY NOT BE REPRODUCED, DISSEMINATED OR REDISTRIBUTED WITHOUT THE EXPRESS WRITTEN CONSENT OF SPRINT.

REVISIONS:

DESCRIPTION	DATE	BY	REV
RELEASE FOR REVIEW	01/16/14	JRV	0
100% CD'S	02/03/14	DSB	1

SITE NAME:

DUBLIN SCIOTO PARK

SITE CASCADE:

CB03XC026-D

SITE ADDRESS:

7377 RIVERSIDE DRIVE
DUBLIN, OH 43017

SHEET DESCRIPTION:

ANTENNA & HYBRID CABLE DETAILS

SHEET NUMBER:

A-3

Bordered Template 070214-2: Sprint 2.5 Construction Plans CB03XC026_(REV1-020314).dwg : Feb 03, 2014, 11:33:23 am

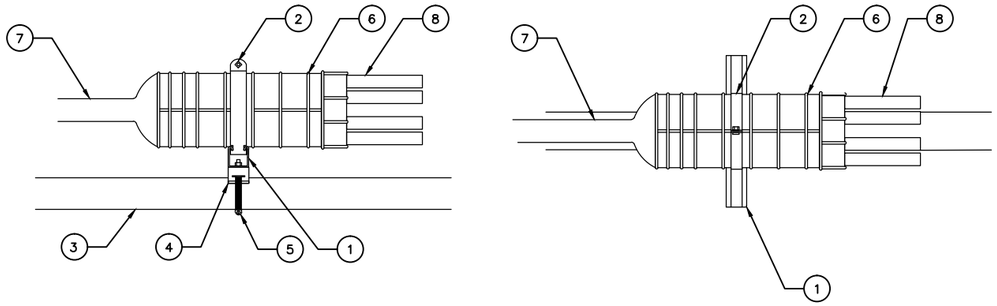

NOTES:

1. 1-5/8" x 1-5/8" UNISTRUT (6" LONG)
2. 4" PIPE HANGER
3. EXISTING SUPPORT PIPE
4. STANDOFF BRACKET ANDREW PART NO. 30848-4. CONTRACTOR TO SUPPLY 3/8" CONNECTION HARDWARE
5. ROUND MEMBER ADAPTER SIZED FOR PIPE SUPPORT
6. CABLE BREAKOUT UNIT
7. NEW OR EXISTING HYBRID CABLE (SEE PLANS)
8. NEW FIBER & POWER CABLES FROM BREAKOUT

HYBRID BREAKOUT DETAIL

SCALE: N.T.S.

1

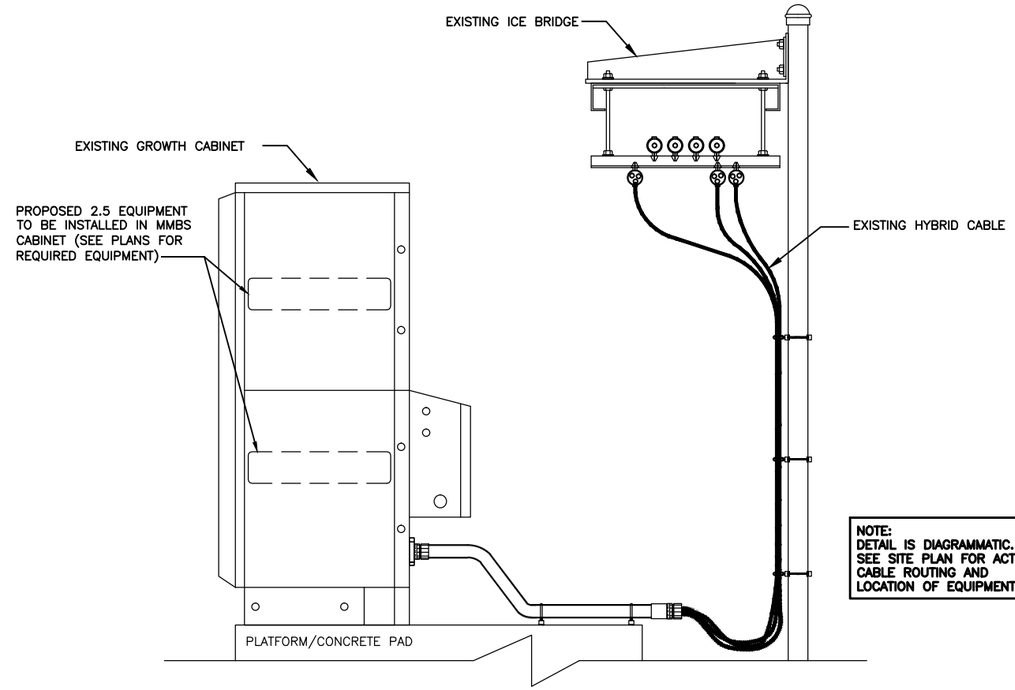

NOTE:
DETAIL IS DIAGRAMMATIC. SEE SITE PLAN FOR ACTUAL CABLE ROUTING AND LOCATION OF EQUIPMENT.

TYPICAL CABLE ROUTE FROM EXISTING MMBS CABINET

SCALE: N.T.S.

2

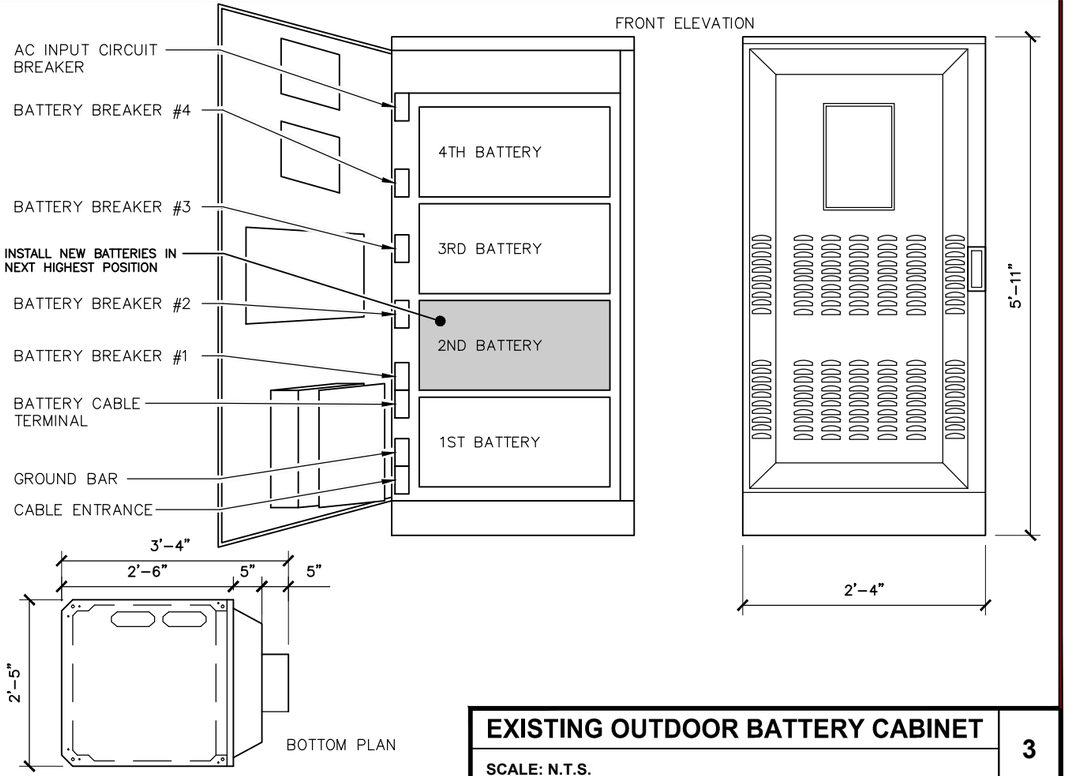

EXISTING OUTDOOR BATTERY CABINET

SCALE: N.T.S.

3

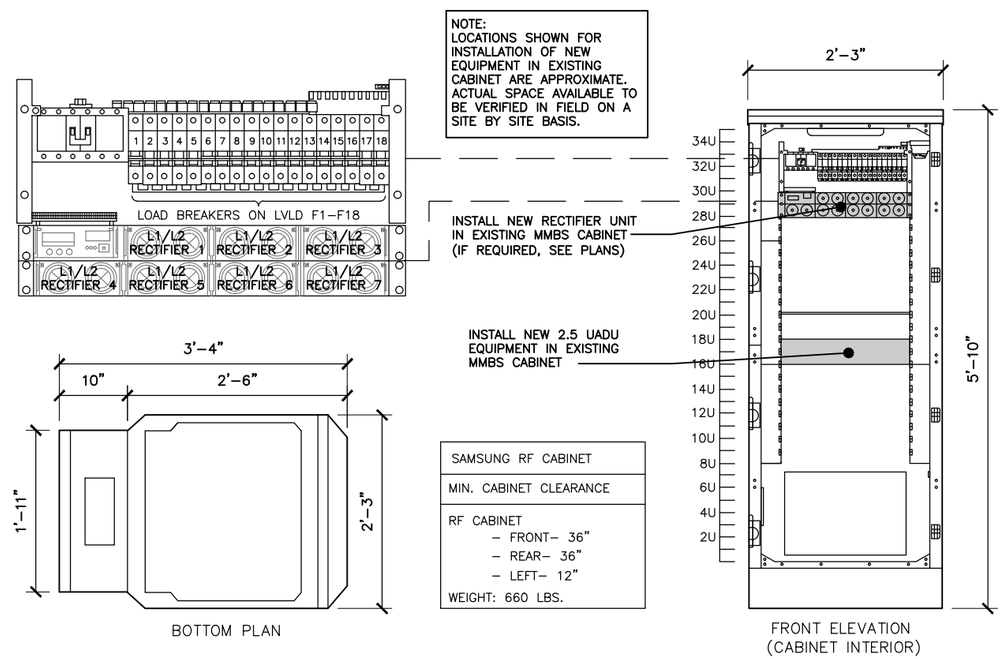

NOTE:
LOCATIONS SHOWN FOR INSTALLATION OF NEW EQUIPMENT IN EXISTING CABINET ARE APPROXIMATE. ACTUAL SPACE AVAILABLE TO BE VERIFIED IN FIELD ON A SITE BY SITE BASIS.

INSTALL NEW RECTIFIER UNIT IN EXISTING MMBS CABINET (IF REQUIRED, SEE PLANS)

INSTALL NEW 2.5 UADU EQUIPMENT IN EXISTING MMBS CABINET

SAMSUNG RF CABINET
MIN. CABINET CLEARANCE
RF CABINET – FRONT– 36" – REAR– 36" – LEFT– 12" WEIGHT: 660 LBS.

EXISTING OUTDOOR MMBS CABINET

SCALE: N.T.S.

4

PLANS PREPARED FOR:

Sprint
6580 Sprint Parkway
Overland Park,
Kansas 66251

PLANS PREPARED BY:

BENCHMARK SERVICES, INC.
PO Box 5 318 North Main Street
Huntingburg, Indiana 47542
Phone: (812) 683-3049

MLA PARTNER:

CROWN CASTLE INTERNATIONAL

ENGINEERING LICENSE:

STATE OF OHIO
RALPH M. WALLEM
E-67208
REGISTERED
PROFESSIONAL ENGINEER

DRAWING NOTICE:

THESE DOCUMENTS ARE CONFIDENTIAL AND ARE THE SOLE PROPERTY OF SPRINT AND MAY NOT BE REPRODUCED, DISSEMINATED OR REDISTRIBUTED WITHOUT THE EXPRESS WRITTEN CONSENT OF SPRINT.

REVISIONS:

DESCRIPTION	DATE	BY	REV
RELEASE FOR REVIEW	01/16/14	JRV	0
100% CD'S	02/03/14	DSB	1

SITE NAME:

DUBLIN SCIOTO PARK

SITE CASCADE:

CB03XC026-D

SITE ADDRESS:

7377 RIVERSIDE DRIVE
DUBLIN, OH 43017

SHEET DESCRIPTION:

BREAKOUT & EQUIPMENT DETAILS

SHEET NUMBER:

A-4

Bordered Template 011014-2, Sprint 2.5, Construction Plans, CB03XC026_REV1-020314.dwg : Feb 03, 2014, 11:13:24 am

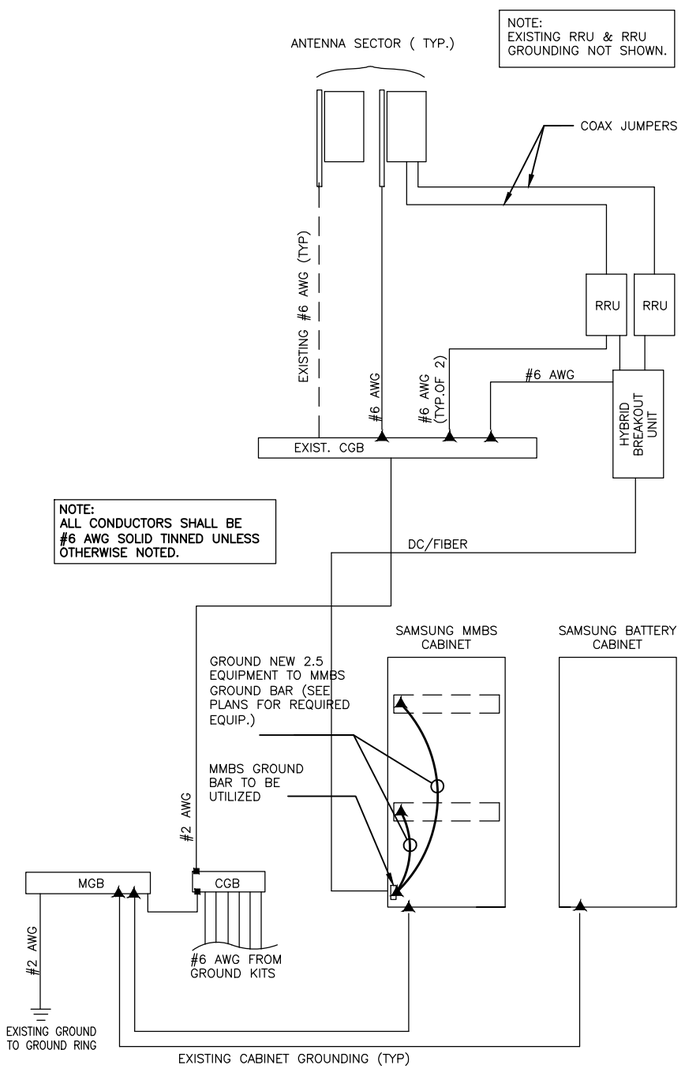

GROUNDING RISER DIAGRAM

SCALE: N.T.S.

1

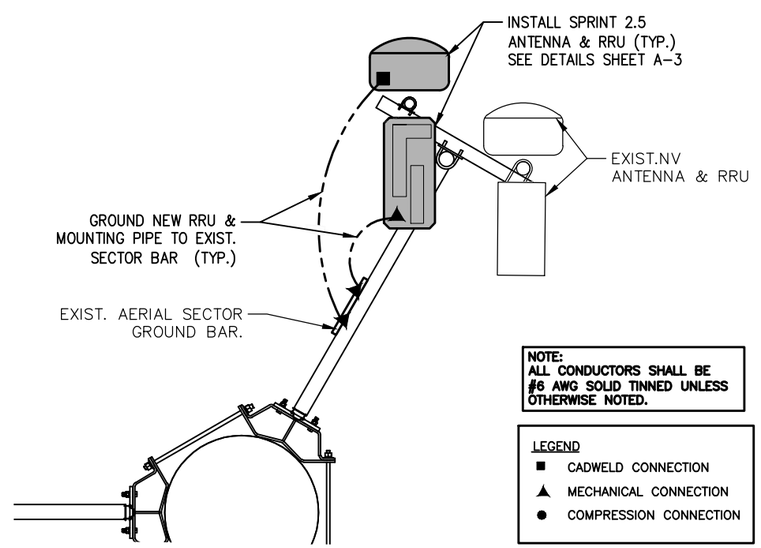

ANTENNA GROUNDING PLAN

SCALE: N.T.S.

2

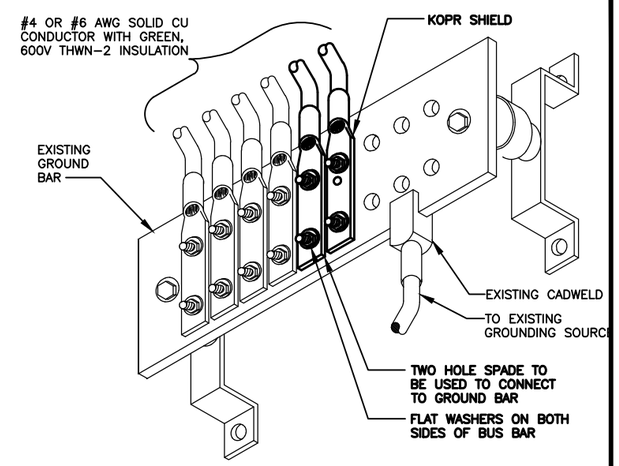

NOTES:

1. APPLY NO-OX TO LUG AND GROUND BAR CONTACT SURFACE. DO NOT COAT INLINE LUG.

2. IF STOLEN GROUND BARS ARE ENCOUNTERED, CONTACT SPRINT CM FOR REPLACEMENT THREADED ROD KIT.

GROUNDING CONDUCTOR INSTALLATION

SCALE: N.T.S.

3

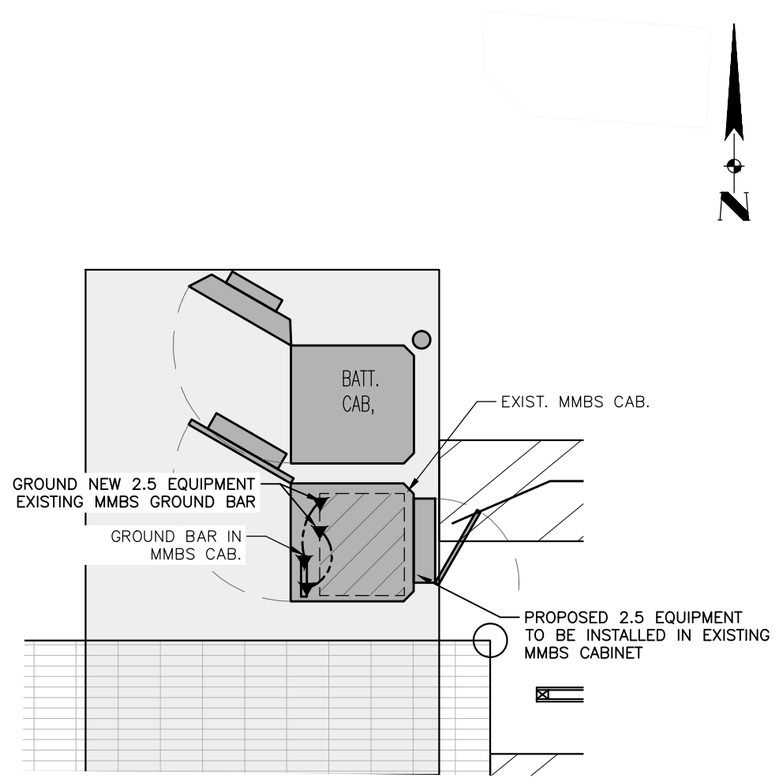

EQUIPMENT GROUNDING PLAN

SEE GRAPHIC SCALE BAR & LABEL

4

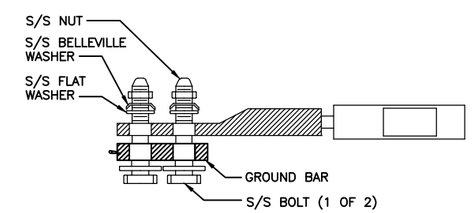

NOTES:

1. PROVIDE 2-HOLE, LONG BARREL, TINNED SOLID COPPER LUGS WHEREVER LUGS ARE SHOWN. ERICO B-122-CE PREFERRED WITH CADWELD TYPE GL CONNECTION. THOMAS AND BETTS 54800BE SERIES WHERE CRIMP CONNECTOR IS REQUIRED.

2. ALL CRIMP CONNECTIONS MUST BE MADE USING HYDRAULIC TOOLS AND THREE POINT HEXAGONAL COMPRESSION MOLDS ON LONG BARREL LUGS.

3. ALL MECHANICAL CONNECTIONS MUST BE MADE USING THOMAS AND BETTS "KOPR-SHIELD". COAT ALL WIRES BEFORE LUGGING. COAT ALL SURFACES BEFORE CONNECTING.

4. ALL HARDWARE 18/8 STAINLESS STEEL INCLUDING BELLEVILLE, COAT ALL SURFACES WITH "KOPR-SHIELD" BEFORE MATING.

5. FOR GROUNDING BOND TO STEEL ONLY: INSERT A DRAGON TOOTH WASHER BETWEEN LUG AND STEEL, COAT ALL SURFACES WITH "KOPR-SHIELD".

6. NO SLOTTED HOLES ON BUS BAR OR LUGS ARE PERMITTED.

7. ALL LUG SHANKS AND LEAD JOINTS SHALL HAVE HEAT SHRINK MATERIAL

TWO HOLE LUG

SCALE: N.T.S.

5

PLANS PREPARED FOR:

Sprint
6580 Sprint Parkway
Overland Park,
Kansas 66251

PLANS PREPARED BY:

BENCHMARK SERVICES, INC.
PO Box 5 318 North Main Street
Huntingburg, Indiana 47542
Phone: (812) 683-3049

MLA PARTNER:

CROWN CASTLE INTERNATIONAL

ENGINEERING LICENSE:

STATE OF OHIO
RALPH M. WALLEM
E-67208
REGISTERED
PROFESSIONAL ENGINEER

DRAWING NOTICE:

THESE DOCUMENTS ARE CONFIDENTIAL AND ARE THE SOLE PROPERTY OF SPRINT AND MAY NOT BE REPRODUCED, DISSEMINATED OR REDISTRIBUTED WITHOUT THE EXPRESS WRITTEN CONSENT OF SPRINT.

REVISIONS:

DESCRIPTION	DATE	BY	REV
RELEASE FOR REVIEW	01/16/14	JRV	0
100% CD'S	02/03/14	DSB	1

SITE NAME:

DUBLIN SCIOTO PARK

SITE CASCADE:

CB03XC026-D

SITE ADDRESS:

7377 RIVERSIDE DRIVE
DUBLIN, OH 43017

SHEET DESCRIPTION:

GROUNDING DETAILS

SHEET NUMBER:

E-1

Backbend Template 010214-2: Sprint 2.5_Construction_Phase_CB03XC026_REV1-020314.dwg : Feb 03, 2014, 11:13:26 am

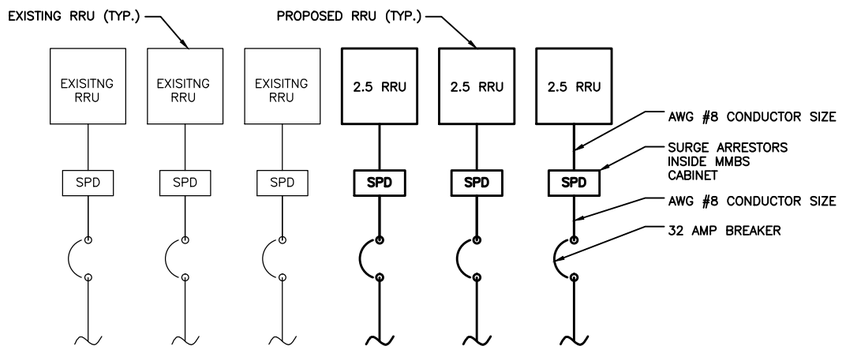

NOTE: THIS DETAIL SHOWS TYPICAL DC LINE REQUIREMENTS FOR EXISTING AND PROPOSED RRU'S. THE DETAIL IS NOT INTENDED TO SHOW ACTUAL NUMBER OF EXISTING AND PROPOSED RRU'S. SEE SHEET A-2 (LEVEL PLANS) FOR THE NUMBER AND PLACEMENT OF ACTUAL RRU'S

DC ONE-LINE DIAGRAM

SCALE: N.T.S.

3

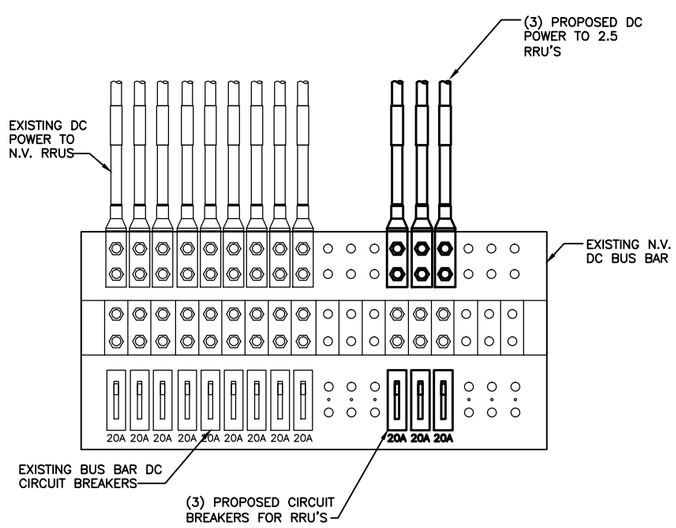

NOTE: THIS DETAIL SHOWS TYPICAL DC LINE REQUIREMENTS FOR EXISTING AND PROPOSED CONNECTIONS. THE DETAIL IS NOT INTENDED TO SHOW ACTUAL NUMBER OF EXISTING AND PROPOSED RRU'S. SEE SHEET A-2 (LEVEL PLANS) FOR THE NUMBER AND PLACEMENT OF ACTUAL RRU'S

DC POWER DISTRIBUTION

SCALE: N.T.S.

2

NOT USED

SCALE: N.T.S.

4

CIRCUIT SCHEDULE

NO	FROM	TO	CONFIGURATION
1	UTILITY SOURCE	METER/DISCONNECT	EXISTING
2	METER/DISCONNECT	TRANSFER & LOAD CENTER	EXISTING
3	TRANSFER & LOAD CENTER	GENERATOR RECEPTACLE	EXISTING
4	TRANSFER & LOAD CENTER	EXISTING MMBS CABINET	(3) #2 AWG, (1) #8 GND IN 1-1/2" CONDUIT
5	TRANSFER & LOAD CENTER	EXISTING BBU CABINET	(2) #12 AWG, (1) #12 GND IN 3/4" CONDUIT

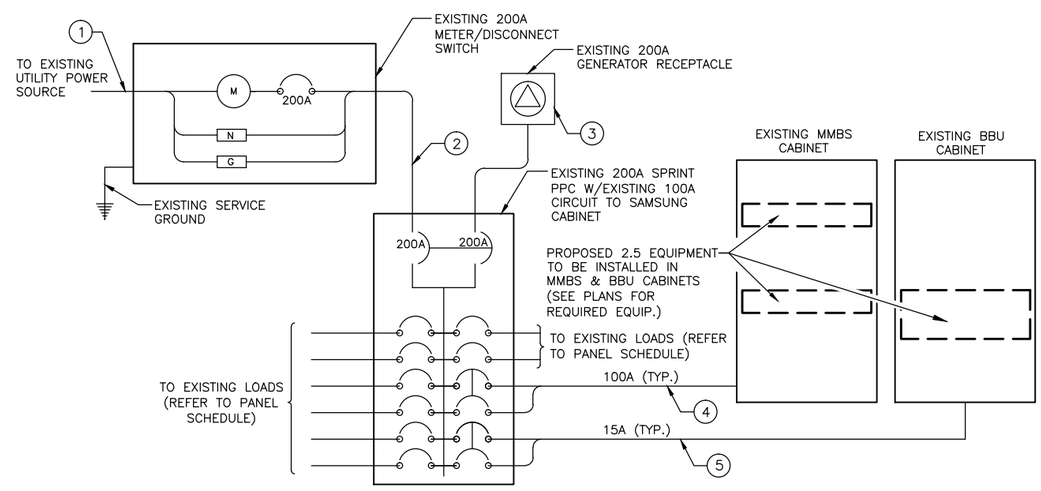

ELECTRICAL ONE-LINE DIAGRAM

SCALE: N.T.S.

1

PLANS PREPARED FOR:

Sprint
6580 Sprint Parkway
Overland Park,
Kansas 66251

PLANS PREPARED BY:

BENCHMARK SERVICES, INC.
PO Box 5 318 North Main Street
Huntingburg, Indiana 47542
Phone: (812) 683-3049

MLA PARTNER:

CROWN CASTLE INTERNATIONAL

ENGINEERING LICENSE:

STATE OF OHIO
RALPH M. WALLEM
E-67208
REGISTERED
PROFESSIONAL ENGINEER

DRAWING NOTICE:

THESE DOCUMENTS ARE CONFIDENTIAL AND ARE THE SOLE PROPERTY OF SPRINT AND MAY NOT BE REPRODUCED, DISSEMINATED OR REDISTRIBUTED WITHOUT THE EXPRESS WRITTEN CONSENT OF SPRINT.

REVISIONS:

DESCRIPTION	DATE	BY	REV
RELEASE FOR REVIEW	01/16/14	JRV	0
100% CD'S	02/03/14	DSB	1

SITE NAME:

DUBLIN SCIOTO PARK

SITE CASCADE:

CB03XC026-D

SITE ADDRESS:

7377 RIVERSIDE DRIVE
DUBLIN, OH 43017

SHEET DESCRIPTION:

DC POWER DETAILS & PANEL SCHEDULES

SHEET NUMBER:

E-2

Borderset Template 010214-2: Sprint_2.5_Construction_Plans_CB03XC026_[REV1-020314].dwg ; Feb 03, 2014, 11:13:28 am

Date: **December 06, 2013**

Patrick Byrum
Crown Castle
3530 Toringdon Way Suite 300
Charlotte, NC 28277

Selective Site Consultants
9900 W 109th Street Suite 300
Overland Park, Kansas 66210
(913)-438-7700

Subject: Structural Analysis Report

Carrier Designation:	***Sprint PCS* Co-Locate**	Scenario 2.5B
	Carrier Site Number:	CB03XC026
	Carrier Site Name:	DUBLIN SCIOTO PARK
Crown Castle Designation:	**Crown Castle BU Number:**	875268
	Crown Castle Site Name:	DUBLIN SCIOTO PARK
	Crown Castle JDE Job Number:	251488
	Crown Castle Work Order Number:	681679
	Crown Castle Application Number:	206097 Rev. 2
Engineering Firm Designation:	**Selective Site Consultants Project Number:**	OH-0083-B
Site Data:	**7377 Riverside Drive, Dublin, Franklin County, OH** **Latitude *40° 7' 4.04"*, Longitude *-83° 6' 39.03"*** **100 Foot - Monopole Tower**	

Dear Patrick Byrum,

Selective Site Consultants is pleased to submit this **"Structural Analysis Report"** to determine the structural integrity of the above mentioned tower. This analysis has been performed in accordance with the Crown Castle Structural 'Statement of Work' and the terms of Crown Castle Purchase Order Number 598756, in accordance with application 206097, revision 2.

The purpose of the analysis is to determine acceptability of the tower stress level. Based on our analysis we have determined the tower stress level for the structure and foundation, under the following load case, to be:

LC5: Existing + Proposed Equipment **Sufficient Capacity**
Note: See Table I and Table II for the proposed and existing loading, respectively.

The analysis has been performed in accordance with the TIA-222-G standard and local code requirements based upon a wind speed of 90 mph 3-second gust, exposure category C.

All modifications and equipment proposed in this report shall be installed in accordance with the attached drawings for the determined available structural capacity to be effective.

We at *Selective Site Consultants* appreciate the opportunity of providing our continuing professional services to you and Crown Castle. If you have any questions or need further assistance on this or any other projects please give us a call.

Structural analysis prepared by: Brandon Sisk

Respectfully submitted by:

STATE OF OHIO
MICHAEL L. OWENS
E-74145
REGISTERED
PROFESSIONAL ENGINEER

12/6/13

Michael L. Owens, P.E.
V.P. Engineering

tnxTower Report - version 6.1.3.1

TABLE OF CONTENTS

1) INTRODUCTION

2) ANALYSIS CRITERIA
- Table 1 - Proposed Antenna and Cable Information
- Table 2 - Existing Antenna and Cable Information
- Table 3 - Design Antenna and Cable Information

3) ANALYSIS PROCEDURE
- Table 4 - Documents Provided
- 3.1) Analysis Method
- 3.2) Assumptions

4) ANALYSIS RESULTS
- Table 5 - Section Capacity (Summary)
- Table 6 – Tower Components vs. Capacity
- 4.1) Recommendations

5) APPENDIX A
- tnxTower Output

6) APPENDIX B
- Base Level Drawing

7) APPENDIX C
- Additional Calculations

1) INTRODUCTION

This tower is a 100ft Monopole tower designed by VALMONT in October of 1998. The tower was originally designed for a wind speed of 80 mph per TIA/EIA-222-F.

2) ANALYSIS CRITERIA

The structural analysis was performed for this tower in accordance with the requirements of TIA-222-G Structural Standards for Steel Antenna Towers and Antenna Supporting Structures using a 3-second gust wind speed of 90 mph with no ice, 40 mph with 0.75 inch ice thickness and 60 mph under service loads, exposure category C.

Table 1 - Proposed Antenna and Cable Information

Mounting Level (ft)	Center Line Elevation (ft)	Number of Antennas	Antenna Manufacturer	Antenna Model	Number of Feed Lines	Feed Line Size (in)	Note
96.0	97.0	3	kmw communications	ET-X-TS-70-15-62-18-iR-RD w/ Mount Pipe	3	1-5/8	-
		3	kmw communications	ET-X-WM-18-65-8P w/ Mount Pipe			
		3	samsung telecommunications	2.5G 8T8R RADAR FILTER			
		3	samsung telecommunications	2.5GHz RRH-V3			
		3	samsung telecommunications	OPTIC FIBER JUNCTION CYLINDER			
		3	samsung telecommunications	POWER JUNCTION CYLINDER			
		3	samsung telecommunications	RRH-C2A w/EXT FILTER			
		3	samsung telecommunications	RRH-P4			

Table 2 - Existing Antenna and Cable Information

Mounting Level (ft)	Center Line Elevation (ft)	Number of Antennas	Antenna Manufacturer	Antenna Model	Number of Feed Lines	Feed Line Size (in)	Note
100.0	100.0	1	miscl	Valmont 1 Tree Pole Branch	-	-	1
96.0	97.0	3	ems wireless	FV65-14-00NA2 w/ Mount Pipe	6	7/8	2
	96.0	1	tower mounts	Miscellaneous [NA 502-1]	-	-	1
		1	tower mounts	Side Arm Mount [SO 701-3]			
86.5	86.5	1	miscl	Valmont 1 Tree Pole Branch	-	-	1
83.5	83.5	1	miscl	Valmont 1 Tree Pole Branch	-	-	1
80.5	80.5	1	miscl	Valmont 1 Tree Pole Branch	-	-	1

Mounting Level (ft)	Center Line Elevation (ft)	Number of Antennas	Antenna Manufacturer	Antenna Model	Number of Feed Lines	Feed Line Size (in)	Note
80.0	80.0	1	tower mounts	Miscellaneous [NA 502-1]	-	-	3
77.5	77.5	1	miscl	Valmont 1 Tree Pole Branch	-	-	1
74.5	74.5	1	miscl	Valmont 1 Tree Pole Branch	-	-	1
70.0	70.0	1	miscl	Valmont 1 Tree Pole Branch	-	-	1

Notes:
1) Existing Equipment
2) Equipment to Be Removed was not considered in this analysis.
3) Empty Mount

Table 3 - Design Antenna and Cable Information

Mounting Level (ft)	Center Line Elevation (ft)	Number of Antennas	Antenna Manufacturer	Antenna Model	Number of Feed Lines	Feed Line Size (in)
100	100	1	Generic	Tree Pole Branches and Antenna top group	-	-
86.5	86.5	1	Generic	Tree Pole Branches	-	-
83.5	83.5	1	Generic	Tree Pole Branches	-	-
80.5	80.5	1	Generic	Tree Pole Branches	-	-
77.5	77.5	1	Generic	Tree Pole Branches	-	-
74.5	74.5	1	Generic	Tree Pole Branches	-	-
70	70	1	Generic	Tree Pole Branches	-	-

3) ANALYSIS PROCEDURE

Table 4 - Documents Provided

Document	Remarks	Reference	Source
4-GEOTECHNICAL REPORTS	G2 Consulting Group, Project #98512A	1517280	CCISITES
4-TOWER FOUNDATION DRAWINGS/DESIGN/SPECS	G2 Consulting Group, Project #98512A	1432890	CCISITES
4-TOWER MANUFACTURER DRAWINGS	Valmont, Order #17946-98	1518356	CCISITES
4-TOWER STRUCTURAL ANALYSIS REPORTS	Selective Site Consultants, Project #OH-0083-A	3485246	CCISITES

3.1) Analysis Method

tnxTower (version 6.1.3.1), a commercially available analysis software package, was used to create a three-dimensional model of the tower and calculate member stresses for various loading cases. Selected output from the analysis is included in Appendix A.

3.2) Assumptions

1) Tower and structures were built in accordance with the manufacturer's specifications.
2) The tower and structures have been maintained in accordance with the manufacturer's specification.
3) The configuration of antennas, transmission cables, mounts and other appurtenances are as specified in Tables 1 and 2 and the referenced drawings.

This analysis may be affected if any assumptions are not valid or have been made in error. Selective Site Consultants should be notified to determine the effect on the structural integrity of the tower.

4) ANALYSIS RESULTS

Table 5 - Section Capacity (Summary)

Section No.	Elevation (ft)	Component Type	Size	Critical Element	P (K)	SF*P_allow (K)	% Capacity	Pass / Fail
L1	100 - 49.5833	Pole	TP26.4x17.06x0.281	1	-8.19	1669.45	66.0	Pass
L2	49.5833 - 0	Pole	TP35x25.0198x0.406	2	-18.77	3333.57	73.0	Pass
							Summary	
						Pole (L2)	73.0	Pass
						RATING =	**73.0**	**Pass**

Table 6 - Tower Component Stresses vs. Capacity – LC5

Notes	Component	Elevation (ft)	% Capacity	Pass / Fail
1	Anchor Rods	0	63.1	Pass
1	Base Plate	0	38.9	Pass
1	Base Foundation	0	32.1	Pass
1	Base Foundation Soil Interaction	0	25.6	Pass

Structure Rating (max from all components) =	73.0%

Notes:
1) See additional documentation in "Appendix C – Additional Calculations" for calculations supporting the % capacity consumed.

4.1) Recommendations

The tower and its foundation have sufficient capacity to carry the existing and proposed loads. No modifications are required at this time.

APPENDIX A

TNXTOWER OUTPUT

Section	Length (ft)	Number of Sides	Thickness (in)	Socket Length (ft)	Top Dia (in)	Bot Dia (in)	Grade	Weight (K)
1	50.42	12	0.2810	4.42	17.0600	26.4000	A572-65	3.3
2	54.00	12	0.4060		25.0198	35.0000		7.1
								10.4

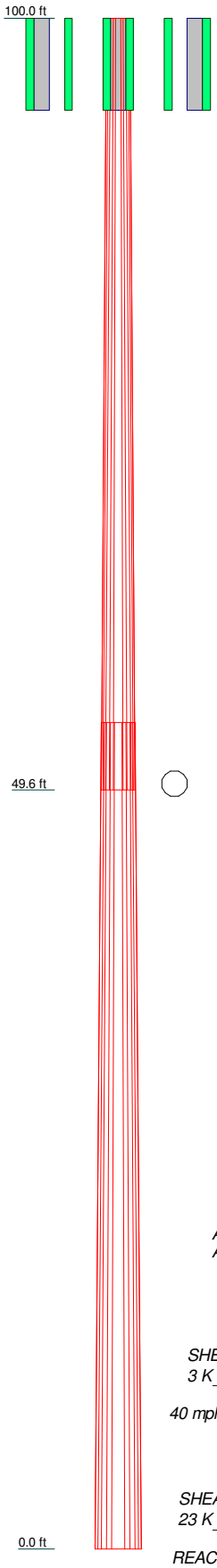

ALL REACTIONS ARE FACTORED

AXIAL 34 K

SHEAR 3 K

MOMENT 265 kip-ft

40 mph WIND - 0.7500 in ICE

AXIAL 19 K

SHEAR 23 K

MOMENT 1696 kip-ft

REACTIONS - 90 mph WIND

DESIGNED APPURTENANCE LOADING

TYPE	ELEVATION	TYPE	ELEVATION
Valmont 1 Tree Pole Branch	100	ET-X-WM-18-65-8P w/ Mount Pipe	96
ET-X-WM-18-65-8P w/ Mount Pipe	96	2.5G 8T8R RADAR FILTER	96
2.5G 8T8R RADAR FILTER	96	2.5GHz RRH-V3	96
2.5GHz RRH-V3	96	OPTIC FIBER JUNCTION CYLINDER	96
OPTIC FIBER JUNCTION CYLINDER	96	POWER JUNCTION CYLINDER	96
POWER JUNCTION CYLINDER	96	RRH-C2A w/EXT FILTER	96
RRH-C2A w/EXT FILTER	96	RRH-P4	96
RRH-P4	96	Side Arm Mount [SO 701-3]	96
ET-X-TS-70-15-62-18-iR-RD w/ Mount Pipe	96	Miscellaneous [NA 502-1]	96
ET-X-WM-18-65-8P w/ Mount Pipe	96	ET-X-TS-70-15-62-18-iR-RD w/ Mount Pipe	96
2.5G 8T8R RADAR FILTER	96	Valmont 1 Tree Pole Branch	86.5
2.5GHz RRH-V3	96	Valmont 1 Tree Pole Branch	83.5
OPTIC FIBER JUNCTION CYLINDER	96	Valmont 1 Tree Pole Branch	80.5
POWER JUNCTION CYLINDER	96	Miscellaneous [NA 502-1]	80
RRH-C2A w/EXT FILTER	96	Valmont 1 Tree Pole Branch	77.5
RRH-P4	96	Valmont 1 Tree Pole Branch	74.5
ET-X-TS-70-15-62-18-iR-RD w/ Mount Pipe	96	Valmont 1 Tree Pole Branch	70

MATERIAL STRENGTH

GRADE	Fy	Fu	GRADE	Fy	Fu
A572-65	65 ksi	80 ksi			

TOWER DESIGN NOTES

1. Tower is located in Franklin County, Ohio.
2. Tower designed for Exposure C to the TIA-222-G Standard.
3. Tower designed for a 90 mph basic wind in accordance with the TIA-222-G Standard.
4. Tower is also designed for a 40 mph basic wind with 0.75 in ice. Ice is considered to increase in thickness with height.
5. Deflections are based upon a 60 mph wind.
6. Tower Structure Class II.
7. Topographic Category 1 with Crest Height of 0.00 ft
8. TOWER RATING: 73%

Selective Site Consultants
9900 W 109th Street Suite 300
Overland Park, Kansas 66210
Phone: (913)-438-7700
FAX: (913)-438-7777

Job: ***OH-0083-B, Dublin Scioto Park, BU #875268***			
Project: ***100ft Monopine***			
Client: Crown Castle	Drawn by: bsisk	App'd:	
Code: TIA-222-G	Date: 12/06/13	Scale: NTS	
Path: O:\Tower Analysis\OH-0083\OH-0083-B\tnx analysis\OH-0083-B (G).erl		Dwg No. E-1	

Tower Input Data

There is a pole section.
This tower is designed using the TIA-222-G standard.
The following design criteria apply:

Tower is located in Franklin County, Ohio.
Basic wind speed of 90 mph.
Structure Class II.
Exposure Category C.
Topographic Category 1.
Crest Height 0.00 ft.
Nominal ice thickness of 0.7500 in.
Ice thickness is considered to increase with height.
Ice density of 56pcf.
A wind speed of 40 mph is used in combination with ice.
Temperature drop of 60 °F.
Deflections calculated using a wind speed of 60 mph.
A non-linear (P-delta) analysis was used.
Pressures are calculated at each section.
Stress ratio used in pole design is 1.
Local bending stresses due to climbing loads, feed line supports, and appurtenance mounts are not considered.

Options

Consider Moments - Legs
Consider Moments - Horizontals
Consider Moments - Diagonals
Use Moment Magnification
√ Use Code Stress Ratios
√ Use Code Safety Factors - Guys
Escalate Ice
Always Use Max Kz
Use Special Wind Profile
Include Bolts In Member Capacity
Leg Bolts Are At Top Of Section
Secondary Horizontal Braces Leg
Use Diamond Inner Bracing (4 Sided)
Add IBC .6D+W Combination

Distribute Leg Loads As Uniform
Assume Legs Pinned
√ Assume Rigid Index Plate
√ Use Clear Spans For Wind Area
Use Clear Spans For KL/r
Retension Guys To Initial Tension
√ Bypass Mast Stability Checks
√ Use Azimuth Dish Coefficients
√ Project Wind Area of Appurt.
Autocalc Torque Arm Areas
SR Members Have Cut Ends
Sort Capacity Reports By Component
Triangulate Diamond Inner Bracing
Use TIA-222-G Tension Splice
Capacity Exemption

Treat Feedline Bundles As Cylinder
Use ASCE 10 X-Brace Ly Rules
Calculate Redundant Bracing Forces
Ignore Redundant Members in FEA
SR Leg Bolts Resist Compression
All Leg Panels Have Same Allowable
Offset Girt At Foundation
√ Consider Feedline Torque
Include Angle Block Shear Check

Poles

√ Include Shear-Torsion Interaction
Always Use Sub-Critical Flow
Use Top Mounted Sockets

Tapered Pole Section Geometry

Section	*Elevation* ft	*Section Length* ft	*Splice Length* ft	*Number of Sides*	*Top Diameter* in	*Bottom Diameter* in	*Wall Thickness* in	*Bend Radius* in	*Pole Grade*
L1	100.00-49.58	50.42	4.42	12	17.0600	26.4000	0.2810	1.1240	A572-65 (65 ksi)
L2	49.58-0.00	54.00		12	25.0198	35.0000	0.4060	1.6240	A572-65 (65 ksi)

Tapered Pole Properties

Section	Tip Dia. in	Area in^2	I in^4	r in	C in	I/C in^3	J in^4	It/Q in^2	w in	w/t
L1	17.6618	15.1820	545.5648	6.0069	8.8371	61.7359	1105.4623	7.4721	3.8190	13.591
	27.3313	23.6330	2057.8693	9.3506	13.6752	150.4818	4169.8010	11.6314	6.3221	22.499
L2	26.7475	32.1781	2488.3019	8.8117	12.9602	191.9949	5041.9742	15.8371	5.6172	13.836
	36.2347	45.2254	6908.2842	12.3847	18.1300	381.0416	13998.0568	22.2586	8.2919	20.423

Tower Elevation ft	Gusset Area (per face) ft^2	Gusset Thickness in	Gusset Grade	Adjust. Factor A_f	Adjust. Factor A_r	Weight Mult.	Double Angle Stitch Bolt Spacing Diagonals in	Double Angle Stitch Bolt Spacing Horizontals in
L1 100.00-49.58				1	1	1		
L2 49.58-0.00				1	1	1		

Feed Line/Linear Appurtenances - Entered As Area

Description	Face or Leg	Allow Shield	Component Type	Placement ft	Total Number		C_AA_A ft^2/ft	Weight plf
96 TYPE 7(1 5/8")	A	No	Inside Pole	96.00 - 0.00	3	No Ice	0.00	2.20
						1/2" Ice	0.00	2.20
						1" Ice	0.00	2.20

Feed Line/Linear Appurtenances Section Areas

Tower Section	Tower Elevation ft	Face	A_R ft^2	A_F ft^2	C_AA_A In Face ft^2	C_AA_A Out Face ft^2	Weight K
L1	100.00-49.58	A	0.000	0.000	0.000	0.000	0.31
		B	0.000	0.000	0.000	0.000	0.00
		C	0.000	0.000	0.000	0.000	0.00
L2	49.58-0.00	A	0.000	0.000	0.000	0.000	0.33
		B	0.000	0.000	0.000	0.000	0.00
		C	0.000	0.000	0.000	0.000	0.00

Feed Line/Linear Appurtenances Section Areas - With Ice

Tower Section	Tower Elevation ft	Face or Leg	Ice Thickness in	A_R ft^2	A_F ft^2	C_AA_A In Face ft^2	C_AA_A Out Face ft^2	Weight K
L1	100.00-49.58	A	1.625	0.000	0.000	0.000	0.000	0.31
		B		0.000	0.000	0.000	0.000	0.00
		C		0.000	0.000	0.000	0.000	0.00
L2	49.58-0.00	A	1.457	0.000	0.000	0.000	0.000	0.33
		B		0.000	0.000	0.000	0.000	0.00
		C		0.000	0.000	0.000	0.000	0.00

Feed Line Center of Pressure

Section	Elevation ft	CP_X in	CP_Z in	CP_X Ice in	CP_Z Ice in
L1	100.00-49.58	0.0000	0.0000	0.0000	0.0000
L2	49.58-0.00	0.0000	0.0000	0.0000	0.0000

Shielding Factor Ka

Tower Section	Feed Line Record No.	Description	Feed Line Segment Elev.	K_a No Ice	K_a Ice

Discrete Tower Loads

Description	Face or Leg	Offset Type	Offsets: Horz Lateral Vert ft ft ft	Azimuth Adjustment °	Placement ft		C_AA_A Front ft^2	C_AA_A Side ft^2	Weight K
96									
Sector A									
ET-X-TS-70-15-62-18-iR-RD w/ Mount Pipe	A	From Leg	3.00 0.00 1.00	0.0000	96.00	No Ice 1/2" Ice 1" Ice	8.70 9.37 10.00	6.49 7.69 8.62	0.07 0.13 0.21
ET-X-WM-18-65-8P w/ Mount Pipe	A	From Leg	3.00 0.00 1.00	0.0000	96.00	No Ice 1/2" Ice 1" Ice	7.35 7.92 8.46	4.43 5.32 6.08	0.06 0.11 0.17
2.5G 8T8R RADAR FILTER	A	From Leg	3.00 0.00 1.00	0.0000	96.00	No Ice 1/2" Ice 1" Ice	0.94 1.08 1.22	0.35 0.46 0.57	0.02 0.03 0.04
2.5GHz RRH-V3	A	From Leg	3.00 0.00 1.00	0.0000	96.00	No Ice 1/2" Ice 1" Ice	2.80 3.03 3.26	1.42 1.59 1.76	0.06 0.08 0.10
OPTIC FIBER JUNCTION CYLINDER	A	From Leg	3.00 0.00 1.00	0.0000	96.00	No Ice 1/2" Ice 1" Ice	0.45 0.55 0.67	0.45 0.55 0.67	0.00 0.01 0.01
POWER JUNCTION CYLINDER	A	From Leg	3.00 0.00 1.00	0.0000	96.00	No Ice 1/2" Ice 1" Ice	0.43 0.53 0.64	0.43 0.53 0.64	0.00 0.01 0.01
RRH-C2A w/EXT FILTER	A	From Leg	3.00 0.00 1.00	0.0000	96.00	No Ice 1/2" Ice 1" Ice	3.09 3.35 3.61	5.54 5.86 6.19	0.05 0.09 0.13
RRH-P4	A	From Leg	3.00 0.00 1.00	0.0000	96.00	No Ice 1/2" Ice 1" Ice	3.19 3.44 3.70	2.07 2.29 2.52	0.06 0.08 0.11
Sector B									
ET-X-TS-70-15-62-18-iR-RD w/ Mount Pipe	B	From Leg	3.00 0.00	0.0000	96.00	No Ice 1/2"	8.70 9.37	6.49 7.69	0.07 0.13

Description	Face or Leg	Offset Type	Offsets: Horz Lateral Vert ft ft ft	Azimuth Adjustment °	Placement ft		C_AA_A Front ft^2	C_AA_A Side ft^2	Weight K
			1.00			Ice	10.00	8.62	0.21
						1" Ice			
ET-X-WM-18-65-8P w/ Mount Pipe	B	From Leg	3.00	0.0000	96.00	No Ice	7.35	4.43	0.06
			0.00			1/2"	7.92	5.32	0.11
			1.00			Ice	8.46	6.08	0.17
						1" Ice			
2.5G 8T8R RADAR FILTER	B	From Leg	3.00	0.0000	96.00	No Ice	0.94	0.35	0.02
			0.00			1/2"	1.08	0.46	0.03
			1.00			Ice	1.22	0.57	0.04
						1" Ice			
2.5GHz RRH-V3	B	From Leg	3.00	0.0000	96.00	No Ice	2.80	1.42	0.06
			0.00			1/2"	3.03	1.59	0.08
			1.00			Ice	3.26	1.76	0.10
						1" Ice			
OPTIC FIBER JUNCTION CYLINDER	B	From Leg	3.00	0.0000	96.00	No Ice	0.45	0.45	0.00
			0.00			1/2"	0.55	0.55	0.01
			1.00			Ice	0.67	0.67	0.01
						1" Ice			
POWER JUNCTION CYLINDER	B	From Leg	3.00	0.0000	96.00	No Ice	0.43	0.43	0.00
			0.00			1/2"	0.53	0.53	0.01
			1.00			Ice	0.64	0.64	0.01
						1" Ice			
RRH-C2A w/EXT FILTER	B	From Leg	3.00	0.0000	96.00	No Ice	3.09	5.54	0.05
			0.00			1/2"	3.35	5.86	0.09
			1.00			Ice	3.61	6.19	0.13
						1" Ice			
RRH-P4	B	From Leg	3.00	0.0000	96.00	No Ice	3.19	2.07	0.06
			0.00			1/2"	3.44	2.29	0.08
			1.00			Ice	3.70	2.52	0.11
						1" Ice			
Sector C									
ET-X-TS-70-15-62-18-iR-RD w/ Mount Pipe	C	From Leg	3.00	0.0000	96.00	No Ice	8.70	6.49	0.07
			0.00			1/2"	9.37	7.69	0.13
			1.00			Ice	10.00	8.62	0.21
						1" Ice			
ET-X-WM-18-65-8P w/ Mount Pipe	C	From Leg	3.00	0.0000	96.00	No Ice	7.35	4.43	0.06
			0.00			1/2"	7.92	5.32	0.11
			1.00			Ice	8.46	6.08	0.17
						1" Ice			
2.5G 8T8R RADAR FILTER	C	From Leg	3.00	0.0000	96.00	No Ice	0.94	0.35	0.02
			0.00			1/2"	1.08	0.46	0.03
			1.00			Ice	1.22	0.57	0.04
						1" Ice			
2.5GHz RRH-V3	C	From Leg	3.00	0.0000	96.00	No Ice	2.80	1.42	0.06
			0.00			1/2"	3.03	1.59	0.08
			1.00			Ice	3.26	1.76	0.10
						1" Ice			
OPTIC FIBER JUNCTION CYLINDER	C	From Leg	3.00	0.0000	96.00	No Ice	0.45	0.45	0.00
			0.00			1/2"	0.55	0.55	0.01
			1.00			Ice	0.67	0.67	0.01
						1" Ice			
POWER JUNCTION CYLINDER	C	From Leg	3.00	0.0000	96.00	No Ice	0.43	0.43	0.00
			0.00			1/2"	0.53	0.53	0.01
			1.00			Ice	0.64	0.64	0.01
						1" Ice			
RRH-C2A w/EXT FILTER	C	From Leg	3.00	0.0000	96.00	No Ice	3.09	5.54	0.05

Description	Face or Leg	Offset Type	Offsets: Horz Lateral Vert ft ft ft	Azimuth Adjustment °	Placement ft		C_AA_A Front ft^2	C_AA_A Side ft^2	Weight K
			0.00			1/2"	3.35	5.86	0.09
			1.00			Ice	3.61	6.19	0.13
						1" Ice			
RRH-P4	C	From Leg	3.00	0.0000	96.00	No Ice	3.19	2.07	0.06
			0.00			1/2"	3.44	2.29	0.08
			1.00			Ice	3.70	2.52	0.11
						1" Ice			
Side Arm Mount [SO 701-3]	C	None		0.0000	96.00	No Ice	2.83	2.83	0.20
						1/2"	3.92	3.92	0.24
						Ice	5.01	5.01	0.28
						1" Ice			
Miscellaneous [NA 502-1]	C	None		0.0000	96.00	No Ice	11.44	11.44	0.66
						1/2"	15.96	15.96	0.81
						Ice	20.48	20.48	0.95
						1" Ice			
80									
Empty Mount									
Miscellaneous [NA 502-1]	C	None		0.0000	80.00	No Ice	11.44	11.44	0.66
						1/2"	15.96	15.96	0.81
						Ice	20.48	20.48	0.95
						1" Ice			
misc									
Valmont 1 Tree Pole Branch	C	None		0.0000	100.00	No Ice	37.00	37.00	0.30
						1/2"	37.00	37.00	0.57
						Ice	37.00	37.00	0.84
						1" Ice			
Valmont 1 Tree Pole Branch	C	None		0.0000	86.50	No Ice	37.00	37.00	0.30
						1/2"	37.00	37.00	0.57
						Ice	37.00	37.00	0.84
						1" Ice			
Valmont 1 Tree Pole Branch	C	None		0.0000	83.50	No Ice	37.00	37.00	0.30
						1/2"	37.00	37.00	0.57
						Ice	37.00	37.00	0.84
						1" Ice			
Valmont 1 Tree Pole Branch	C	None		0.0000	80.50	No Ice	37.00	37.00	0.30
						1/2"	37.00	37.00	0.57
						Ice	37.00	37.00	0.84
						1" Ice			
Valmont 1 Tree Pole Branch	C	None		0.0000	77.50	No Ice	37.00	37.00	0.30
						1/2"	37.00	37.00	0.57
						Ice	37.00	37.00	0.84
						1" Ice			
Valmont 1 Tree Pole Branch	C	None		0.0000	74.50	No Ice	37.00	37.00	0.30
						1/2"	37.00	37.00	0.57
						Ice	37.00	37.00	0.84
						1" Ice			
Valmont 1 Tree Pole Branch	C	None		0.0000	70.00	No Ice	37.00	37.00	0.30
						1/2"	37.00	37.00	0.57
						Ice	37.00	37.00	0.84
						1" Ice			

Load Combinations

Comb. No.	Description
1	Dead Only
2	1.2 Dead+1.6 Wind 0 deg - No Ice
3	0.9 Dead+1.6 Wind 0 deg - No Ice
4	1.2 Dead+1.6 Wind 30 deg - No Ice
5	0.9 Dead+1.6 Wind 30 deg - No Ice
6	1.2 Dead+1.6 Wind 60 deg - No Ice
7	0.9 Dead+1.6 Wind 60 deg - No Ice
8	1.2 Dead+1.6 Wind 90 deg - No Ice
9	0.9 Dead+1.6 Wind 90 deg - No Ice
10	1.2 Dead+1.6 Wind 120 deg - No Ice
11	0.9 Dead+1.6 Wind 120 deg - No Ice
12	1.2 Dead+1.6 Wind 150 deg - No Ice
13	0.9 Dead+1.6 Wind 150 deg - No Ice
14	1.2 Dead+1.6 Wind 180 deg - No Ice
15	0.9 Dead+1.6 Wind 180 deg - No Ice
16	1.2 Dead+1.6 Wind 210 deg - No Ice
17	0.9 Dead+1.6 Wind 210 deg - No Ice
18	1.2 Dead+1.6 Wind 240 deg - No Ice
19	0.9 Dead+1.6 Wind 240 deg - No Ice
20	1.2 Dead+1.6 Wind 270 deg - No Ice
21	0.9 Dead+1.6 Wind 270 deg - No Ice
22	1.2 Dead+1.6 Wind 300 deg - No Ice
23	0.9 Dead+1.6 Wind 300 deg - No Ice
24	1.2 Dead+1.6 Wind 330 deg - No Ice
25	0.9 Dead+1.6 Wind 330 deg - No Ice
26	1.2 Dead+1.0 Ice+1.0 Temp
27	1.2 Dead+1.0 Wind 0 deg+1.0 Ice+1.0 Temp
28	1.2 Dead+1.0 Wind 30 deg+1.0 Ice+1.0 Temp
29	1.2 Dead+1.0 Wind 60 deg+1.0 Ice+1.0 Temp
30	1.2 Dead+1.0 Wind 90 deg+1.0 Ice+1.0 Temp
31	1.2 Dead+1.0 Wind 120 deg+1.0 Ice+1.0 Temp
32	1.2 Dead+1.0 Wind 150 deg+1.0 Ice+1.0 Temp
33	1.2 Dead+1.0 Wind 180 deg+1.0 Ice+1.0 Temp
34	1.2 Dead+1.0 Wind 210 deg+1.0 Ice+1.0 Temp
35	1.2 Dead+1.0 Wind 240 deg+1.0 Ice+1.0 Temp
36	1.2 Dead+1.0 Wind 270 deg+1.0 Ice+1.0 Temp
37	1.2 Dead+1.0 Wind 300 deg+1.0 Ice+1.0 Temp
38	1.2 Dead+1.0 Wind 330 deg+1.0 Ice+1.0 Temp
39	Dead+Wind 0 deg - Service
40	Dead+Wind 30 deg - Service
41	Dead+Wind 60 deg - Service
42	Dead+Wind 90 deg - Service
43	Dead+Wind 120 deg - Service
44	Dead+Wind 150 deg - Service
45	Dead+Wind 180 deg - Service
46	Dead+Wind 210 deg - Service
47	Dead+Wind 240 deg - Service
48	Dead+Wind 270 deg - Service
49	Dead+Wind 300 deg - Service
50	Dead+Wind 330 deg - Service

Maximum Member Forces

Section No.	Elevation ft	Component Type	Condition	Gov. Load Comb.	Axial K	Major Axis Moment kip-ft	Minor Axis Moment kip-ft
L1	100 -	Pole	Max Tension	1	0.00	0.00	0.00

Section No.	Elevation ft	Component Type	Condition	Gov. Load Comb.	Axial K	Major Axis Moment kip-ft	Minor Axis Moment kip-ft
	49.5833						
			Max. Compression	26	-21.43	0.00	0.00
			Max. Mx	8	-8.19	-561.54	0.00
			Max. My	2	-8.19	0.00	561.54
			Max. Vy	8	18.88	-561.54	0.00
			Max. Vx	2	-18.88	0.00	561.54
			Max. Torque	12			0.00
L2	49.5833 - 0	Pole	Max Tension	1	0.00	0.00	0.00
			Max. Compression	26	-34.16	0.00	0.00
			Max. Mx	8	-18.77	-1695.61	0.00
			Max. My	14	-18.77	0.00	-1695.61
			Max. Vy	8	22.92	-1695.61	0.00
			Max. Vx	2	-22.92	0.00	1695.61
			Max. Torque	12			0.00

Maximum Reactions

Location	Condition	Gov. Load Comb.	Vertical K	Horizontal, X K	Horizontal, Z K
Pole	Max. Vert	27	34.16	0.00	3.48
	Max. H_x	20	18.80	22.89	0.00
	Max. H_z	2	18.80	0.00	22.89
	Max. M_x	2	1695.61	0.00	22.89
	Max. M_z	8	1695.61	-22.89	0.00
	Max. Torsion	12	0.00	-11.44	-19.82
	Min. Vert	11	14.10	-19.82	-11.44
	Min. H_x	8	18.80	-22.89	0.00
	Min. H_z	14	18.80	0.00	-22.89
	Min. M_x	14	-1695.61	0.00	-22.89
	Min. M_z	20	-1695.61	22.89	0.00
	Min. Torsion	16	-0.00	11.44	-19.82

Tower Mast Reaction Summary

Load Combination	Vertical K	$Shear_x$ K	$Shear_z$ K	Overturning Moment, M_x kip-ft	Overturning Moment, M_z kip-ft	Torque kip-ft
Dead Only	15.67	0.00	0.00	0.00	0.00	0.00
1.2 Dead+1.6 Wind 0 deg - No Ice	18.80	0.00	-22.89	-1695.61	0.00	0.00
0.9 Dead+1.6 Wind 0 deg - No Ice	14.10	0.00	-22.89	-1684.09	0.00	0.00
1.2 Dead+1.6 Wind 30 deg - No Ice	18.80	11.44	-19.82	-1468.45	-847.81	0.00
0.9 Dead+1.6 Wind 30 deg - No Ice	14.10	11.44	-19.82	-1458.46	-842.04	0.00
1.2 Dead+1.6 Wind 60 deg - No Ice	18.80	19.82	-11.44	-847.81	-1468.45	-0.00
0.9 Dead+1.6 Wind 60 deg - No Ice	14.10	19.82	-11.44	-842.04	-1458.46	-0.00
1.2 Dead+1.6 Wind 90 deg - No Ice	18.80	22.89	0.00	0.00	-1695.61	0.00
0.9 Dead+1.6 Wind 90 deg - No Ice	14.10	22.89	0.00	0.00	-1684.09	0.00
1.2 Dead+1.6 Wind 120 deg	18.80	19.82	11.44	847.81	-1468.45	0.00

Load Combination	Vertical	$Shear_x$	$Shear_z$	Overturning Moment, M_x	Overturning Moment, M_z	Torque
	K	K	K	kip-ft	kip-ft	kip-ft
- No Ice						
0.9 Dead+1.6 Wind 120 deg - No Ice	14.10	19.82	11.44	842.04	-1458.46	0.00
1.2 Dead+1.6 Wind 150 deg - No Ice	18.80	11.44	19.82	1468.45	-847.81	-0.00
0.9 Dead+1.6 Wind 150 deg - No Ice	14.10	11.44	19.82	1458.46	-842.04	-0.00
1.2 Dead+1.6 Wind 180 deg - No Ice	18.80	0.00	22.89	1695.61	0.00	0.00
0.9 Dead+1.6 Wind 180 deg - No Ice	14.10	0.00	22.89	1684.09	0.00	0.00
1.2 Dead+1.6 Wind 210 deg - No Ice	18.80	-11.44	19.82	1468.45	847.81	0.00
0.9 Dead+1.6 Wind 210 deg - No Ice	14.10	-11.44	19.82	1458.46	842.04	0.00
1.2 Dead+1.6 Wind 240 deg - No Ice	18.80	-19.82	11.44	847.81	1468.45	-0.00
0.9 Dead+1.6 Wind 240 deg - No Ice	14.10	-19.82	11.44	842.04	1458.46	-0.00
1.2 Dead+1.6 Wind 270 deg - No Ice	18.80	-22.89	0.00	0.00	1695.61	0.00
0.9 Dead+1.6 Wind 270 deg - No Ice	14.10	-22.89	0.00	0.00	1684.09	0.00
1.2 Dead+1.6 Wind 300 deg - No Ice	18.80	-19.82	-11.44	-847.81	1468.45	0.00
0.9 Dead+1.6 Wind 300 deg - No Ice	14.10	-19.82	-11.44	-842.04	1458.46	0.00
1.2 Dead+1.6 Wind 330 deg - No Ice	18.80	-11.44	-19.82	-1468.45	847.81	-0.00
0.9 Dead+1.6 Wind 330 deg - No Ice	14.10	-11.44	-19.82	-1458.46	842.04	-0.00
1.2 Dead+1.0 Ice+1.0 Temp	34.16	0.00	0.00	0.00	0.00	0.00
1.2 Dead+1.0 Wind 0 deg+1.0 Ice+1.0 Temp	34.16	0.00	-3.48	-265.34	0.00	0.00
1.2 Dead+1.0 Wind 30 deg+1.0 Ice+1.0 Temp	34.16	1.74	-3.01	-229.79	-132.67	0.00
1.2 Dead+1.0 Wind 60 deg+1.0 Ice+1.0 Temp	34.16	3.01	-1.74	-132.67	-229.79	-0.00
1.2 Dead+1.0 Wind 90 deg+1.0 Ice+1.0 Temp	34.16	3.48	0.00	0.00	-265.34	0.00
1.2 Dead+1.0 Wind 120 deg+1.0 Ice+1.0 Temp	34.16	3.01	1.74	132.67	-229.79	0.00
1.2 Dead+1.0 Wind 150 deg+1.0 Ice+1.0 Temp	34.16	1.74	3.01	229.79	-132.67	-0.00
1.2 Dead+1.0 Wind 180 deg+1.0 Ice+1.0 Temp	34.16	0.00	3.48	265.34	0.00	0.00
1.2 Dead+1.0 Wind 210 deg+1.0 Ice+1.0 Temp	34.16	-1.74	3.01	229.79	132.67	0.00
1.2 Dead+1.0 Wind 240 deg+1.0 Ice+1.0 Temp	34.16	-3.01	1.74	132.67	229.79	-0.00
1.2 Dead+1.0 Wind 270 deg+1.0 Ice+1.0 Temp	34.16	-3.48	0.00	0.00	265.34	0.00
1.2 Dead+1.0 Wind 300 deg+1.0 Ice+1.0 Temp	34.16	-3.01	-1.74	-132.67	229.79	0.00
1.2 Dead+1.0 Wind 330 deg+1.0 Ice+1.0 Temp	34.16	-1.74	-3.01	-229.79	132.67	-0.00
Dead+Wind 0 deg - Service	15.67	0.00	-5.69	-420.16	0.00	0.00
Dead+Wind 30 deg - Service	15.67	2.84	-4.93	-363.87	-210.08	0.00
Dead+Wind 60 deg - Service	15.67	4.93	-2.84	-210.08	-363.87	-0.00
Dead+Wind 90 deg - Service	15.67	5.69	0.00	0.00	-420.16	0.00

Load Combination	Vertical	$Shear_x$	$Shear_z$	Overturning Moment, M_x	Overturning Moment, M_z	Torque
	K	K	K	kip-ft	kip-ft	kip-ft
Dead+Wind 120 deg - Service	15.67	4.93	2.84	210.08	-363.87	0.00
Dead+Wind 150 deg - Service	15.67	2.84	4.93	363.87	-210.08	-0.00
Dead+Wind 180 deg - Service	15.67	0.00	5.69	420.16	0.00	0.00
Dead+Wind 210 deg - Service	15.67	-2.84	4.93	363.87	210.08	0.00
Dead+Wind 240 deg - Service	15.67	-4.93	2.84	210.08	363.87	-0.00
Dead+Wind 270 deg - Service	15.67	-5.69	0.00	0.00	420.16	0.00
Dead+Wind 300 deg - Service	15.67	-4.93	-2.84	-210.08	363.87	0.00
Dead+Wind 330 deg - Service	15.67	-2.84	-4.93	-363.87	210.08	-0.00

Solution Summary

	Sum of Applied Forces			Sum of Reactions			
Load Comb.	PX	PY	PZ	PX	PY	PZ	% Error
	K	K	K	K	K	K	
1	0.00	-15.67	0.00	0.00	15.67	0.00	0.000%
2	0.00	-18.80	-22.89	0.00	18.80	22.89	0.000%
3	0.00	-14.10	-22.89	0.00	14.10	22.89	0.000%
4	11.44	-18.80	-19.82	-11.44	18.80	19.82	0.000%
5	11.44	-14.10	-19.82	-11.44	14.10	19.82	0.000%
6	19.82	-18.80	-11.44	-19.82	18.80	11.44	0.000%
7	19.82	-14.10	-11.44	-19.82	14.10	11.44	0.000%
8	22.89	-18.80	0.00	-22.89	18.80	0.00	0.000%
9	22.89	-14.10	0.00	-22.89	14.10	0.00	0.000%
10	19.82	-18.80	11.44	-19.82	18.80	-11.44	0.000%
11	19.82	-14.10	11.44	-19.82	14.10	-11.44	0.000%
12	11.44	-18.80	19.82	-11.44	18.80	-19.82	0.000%
13	11.44	-14.10	19.82	-11.44	14.10	-19.82	0.000%
14	0.00	-18.80	22.89	0.00	18.80	-22.89	0.000%
15	0.00	-14.10	22.89	0.00	14.10	-22.89	0.000%
16	-11.44	-18.80	19.82	11.44	18.80	-19.82	0.000%
17	-11.44	-14.10	19.82	11.44	14.10	-19.82	0.000%
18	-19.82	-18.80	11.44	19.82	18.80	-11.44	0.000%
19	-19.82	-14.10	11.44	19.82	14.10	-11.44	0.000%
20	-22.89	-18.80	0.00	22.89	18.80	0.00	0.000%
21	-22.89	-14.10	0.00	22.89	14.10	0.00	0.000%
22	-19.82	-18.80	-11.44	19.82	18.80	11.44	0.000%
23	-19.82	-14.10	-11.44	19.82	14.10	11.44	0.000%
24	-11.44	-18.80	-19.82	11.44	18.80	19.82	0.000%
25	-11.44	-14.10	-19.82	11.44	14.10	19.82	0.000%
26	0.00	-34.16	0.00	0.00	34.16	0.00	0.000%
27	0.00	-34.16	-3.48	0.00	34.16	3.48	0.000%
28	1.74	-34.16	-3.01	-1.74	34.16	3.01	0.000%
29	3.01	-34.16	-1.74	-3.01	34.16	1.74	0.000%
30	3.48	-34.16	0.00	-3.48	34.16	0.00	0.000%
31	3.01	-34.16	1.74	-3.01	34.16	-1.74	0.000%
32	1.74	-34.16	3.01	-1.74	34.16	-3.01	0.000%
33	0.00	-34.16	3.48	0.00	34.16	-3.48	0.000%
34	-1.74	-34.16	3.01	1.74	34.16	-3.01	0.000%
35	-3.01	-34.16	1.74	3.01	34.16	-1.74	0.000%
36	-3.48	-34.16	0.00	3.48	34.16	0.00	0.000%

Load Comb.	Sum of Applied Forces PX K	PY K	PZ K	Sum of Reactions PX K	PY K	PZ K	% Error
37	-3.01	-34.16	-1.74	3.01	34.16	1.74	0.000%
38	-1.74	-34.16	-3.01	1.74	34.16	3.01	0.000%
39	0.00	-15.67	-5.69	0.00	15.67	5.69	0.000%
40	2.84	-15.67	-4.93	-2.84	15.67	4.93	0.000%
41	4.93	-15.67	-2.84	-4.93	15.67	2.84	0.000%
42	5.69	-15.67	0.00	-5.69	15.67	0.00	0.000%
43	4.93	-15.67	2.84	-4.93	15.67	-2.84	0.000%
44	2.84	-15.67	4.93	-2.84	15.67	-4.93	0.000%
45	0.00	-15.67	5.69	0.00	15.67	-5.69	0.000%
46	-2.84	-15.67	4.93	2.84	15.67	-4.93	0.000%
47	-4.93	-15.67	2.84	4.93	15.67	-2.84	0.000%
48	-5.69	-15.67	0.00	5.69	15.67	0.00	0.000%
49	-4.93	-15.67	-2.84	4.93	15.67	2.84	0.000%
50	-2.84	-15.67	-4.93	2.84	15.67	4.93	0.000%

Non-Linear Convergence Results

Load Combination	Converged?	Number of Cycles	Displacement Tolerance	Force Tolerance
1	Yes	4	0.00000001	0.00000001
2	Yes	4	0.00000001	0.00004886
3	Yes	4	0.00000001	0.00001225
4	Yes	5	0.00000001	0.00011231
5	Yes	5	0.00000001	0.00004172
6	Yes	5	0.00000001	0.00011231
7	Yes	5	0.00000001	0.00004172
8	Yes	4	0.00000001	0.00004886
9	Yes	4	0.00000001	0.00001225
10	Yes	5	0.00000001	0.00011231
11	Yes	5	0.00000001	0.00004172
12	Yes	5	0.00000001	0.00011231
13	Yes	5	0.00000001	0.00004172
14	Yes	4	0.00000001	0.00004886
15	Yes	4	0.00000001	0.00001225
16	Yes	5	0.00000001	0.00011231
17	Yes	5	0.00000001	0.00004172
18	Yes	5	0.00000001	0.00011231
19	Yes	5	0.00000001	0.00004172
20	Yes	4	0.00000001	0.00004886
21	Yes	4	0.00000001	0.00001225
22	Yes	5	0.00000001	0.00011231
23	Yes	5	0.00000001	0.00004172
24	Yes	5	0.00000001	0.00011231
25	Yes	5	0.00000001	0.00004172
26	Yes	4	0.00000001	0.00000001
27	Yes	4	0.00000001	0.00060028
28	Yes	4	0.00000001	0.00067117
29	Yes	4	0.00000001	0.00067117
30	Yes	4	0.00000001	0.00060028
31	Yes	4	0.00000001	0.00067117
32	Yes	4	0.00000001	0.00067117
33	Yes	4	0.00000001	0.00060028
34	Yes	4	0.00000001	0.00067117
35	Yes	4	0.00000001	0.00067117
36	Yes	4	0.00000001	0.00060028
37	Yes	4	0.00000001	0.00067117
38	Yes	4	0.00000001	0.00067117
39	Yes	4	0.00000001	0.00000001

40	Yes	4	0.00000001	0.00011298
41	Yes	4	0.00000001	0.00011298
42	Yes	4	0.00000001	0.00000001
43	Yes	4	0.00000001	0.00011298
44	Yes	4	0.00000001	0.00011298
45	Yes	4	0.00000001	0.00000001
46	Yes	4	0.00000001	0.00011298
47	Yes	4	0.00000001	0.00011298
48	Yes	4	0.00000001	0.00000001
49	Yes	4	0.00000001	0.00011298
50	Yes	4	0.00000001	0.00011298

Maximum Tower Deflections - Service Wind

Section No.	Elevation ft	Horz. Deflection in	Gov. Load Comb.	Tilt °	Twist °
L1	100 - 49.5833	17.441	45	1.4114	0.0000
L2	54 - 0	5.383	45	0.9145	0.0000

Critical Deflections and Radius of Curvature - Service Wind

Elevation ft	Appurtenance	Gov. Load Comb.	Deflection in	Tilt °	Twist °	Radius of Curvature ft
100.00	Valmont 1 Tree Pole Branch	45	17.441	1.4114	0.0000	22675
96.00	ET-X-TS-70-15-62-18-iR-RD w/ Mount Pipe	45	16.244	1.3738	0.0000	22675
86.50	Valmont 1 Tree Pole Branch	45	13.441	1.2830	0.0000	8398
83.50	Valmont 1 Tree Pole Branch	45	12.579	1.2535	0.0000	6871
80.50	Valmont 1 Tree Pole Branch	45	11.732	1.2233	0.0000	5813
80.00	Miscellaneous [NA 502-1]	45	11.592	1.2182	0.0000	5668
77.50	Valmont 1 Tree Pole Branch	45	10.903	1.1925	0.0000	5038
74.50	Valmont 1 Tree Pole Branch	45	10.097	1.1609	0.0000	4445
70.00	Valmont 1 Tree Pole Branch	45	8.933	1.1117	0.0000	3778

Maximum Tower Deflections - Design Wind

Section No.	Elevation ft	Horz. Deflection in	Gov. Load Comb.	Tilt °	Twist °
L1	100 - 49.5833	70.349	14	5.6987	0.0000
L2	54 - 0	21.725	14	3.6924	0.0000

Critical Deflections and Radius of Curvature - Design Wind

Elevation ft	Appurtenance	Gov. Load Comb.	Deflection in	Tilt °	Twist °	Radius of Curvature ft
100.00	Valmont 1 Tree Pole Branch	14	70.349	5.6987	0.0000	5705
96.00	ET-X-TS-70-15-62-18-iR-RD w/ Mount Pipe	14	65.523	5.5469	0.0000	5705
86.50	Valmont 1 Tree Pole Branch	14	54.221	5.1802	0.0000	2111
83.50	Valmont 1 Tree Pole Branch	14	50.743	5.0610	0.0000	1727
80.50	Valmont 1 Tree Pole Branch	14	47.328	4.9394	0.0000	1460
80.00	Miscellaneous [NA 502-1]	14	46.766	4.9188	0.0000	1424
77.50	Valmont 1 Tree Pole Branch	14	43.988	4.8149	0.0000	1265

Elevation ft	Appurtenance	Gov. Load Comb.	Deflection in	Tilt °	Twist °	Radius of Curvature ft
74.50	Valmont 1 Tree Pole Branch	14	40.735	4.6872	0.0000	1115
70.00	Valmont 1 Tree Pole Branch	14	36.042	4.4885	0.0000	947

Compression Checks

Pole Design Data

Section No.	Elevation ft	Size	L ft	L_u ft	Kl/r	A in^2	P_u K	ϕP_n K	Ratio $\frac{P_u}{\phi P_n}$
L1	100 - 97.5789	TP26.4x17.06x0.281	50.42	0.00	0.0	15.5878	-0.35	1148.98	0.000
	97.5789 - 95.1579					15.9936	-2.35	1178.89	0.002
	95.1579 - 92.7368					16.3995	-2.52	1208.80	0.002
	92.7368 - 90.3158					16.8053	-2.68	1238.72	0.002
	90.3158 - 87.8947					17.2111	-2.86	1268.63	0.002
	87.8947 - 85.4737					17.6169	-3.24	1298.54	0.002
	85.4737 - 83.0526					18.0228	-3.63	1328.46	0.003
	83.0526 - 80.6316					18.4286	-3.82	1358.37	0.003
	80.6316 - 78.2105					18.8344	-4.98	1388.28	0.004
	78.2105 - 75.7895					19.2402	-5.41	1418.20	0.004
	75.7895 - 73.3684					19.6461	-5.85	1448.11	0.004
	73.3684 - 70.9474					20.0519	-6.08	1478.02	0.004
	70.9474 - 68.5263					20.4577	-6.55	1507.94	0.004
	68.5263 - 66.1053					20.8635	-6.81	1537.85	0.004
	66.1053 - 63.6842					21.2694	-7.07	1567.76	0.005
	63.6842 - 61.2632					21.6752	-7.34	1597.68	0.005
	61.2632 - 58.8421					22.0810	-7.61	1627.59	0.005
	58.8421 - 56.4211					22.4868	-7.90	1649.29	0.005
	56.4211 - 54					22.8927	-8.19	1669.45	0.005
	54 - 49.5833					23.6330	-3.85	1705.33	0.002
L2	54 - 49.5833	TP35x25.0198x0.406	54.00	0.00	0.0	33.2452	-5.41	2450.51	0.002
	49.5833 - 46.9737					33.8758	-9.69	2496.98	0.004
	46.9737 - 44.364					34.5063	-10.12	2543.46	0.004
	44.364 - 41.7544					35.1368	-10.57	2589.94	0.004

Section No.	Elevation ft	Size	L ft	L_u ft	Kl/r	A in^2	P_u K	ϕP_n K	Ratio $\frac{P_u}{\phi P_n}$
	41.7544 - 39.1447					35.7674	-11.02	2636.41	0.004
	39.1447 - 36.5351					36.3979	-11.48	2682.89	0.004
	36.5351 - 33.9254					37.0285	-11.94	2729.37	0.004
	33.9254 - 31.3158					37.6590	-12.42	2775.84	0.004
	31.3158 - 28.7061					38.2895	-12.90	2822.32	0.005
	28.7061 - 26.0965					38.9201	-13.40	2868.80	0.005
	26.0965 - 23.4868					39.5506	-13.90	2915.27	0.005
	23.4868 - 20.8772					40.1811	-14.41	2961.75	0.005
	20.8772 - 18.2675					40.8117	-14.93	3008.23	0.005
	18.2675 - 15.6579					41.4422	-15.45	3054.71	0.005
	15.6579 - 13.0482					42.0727	-15.98	3101.18	0.005
	13.0482 - 10.4386					42.7033	-16.53	3147.66	0.005
	10.4386 - 7.82895					43.3338	-17.07	3194.14	0.005
	7.82895 - 5.2193					43.9644	-17.63	3240.61	0.005
	5.2193 - 2.60965					44.5949	-18.19	3287.09	0.006
	2.60965 - 0					45.2254	-18.77	3333.57	0.006

Pole Bending Design Data

Section No.	Elevation ft	Size	M_{ux} kip-ft	ϕM_{nx} kip-ft	Ratio $\frac{M_{ux}}{\phi M_{nx}}$	M_{uy} kip-ft	ϕM_{ny} kip-ft	Ratio $\frac{M_{uy}}{\phi M_{ny}}$
L1	100 - 97.5789	TP26.4x17.06x0.281	4.21	399.93	0.011	0.00	399.93	0.000
	97.5789 - 95.1579		14.73	421.19	0.035	0.00	421.19	0.000
	95.1579 - 92.7368		28.64	443.01	0.065	0.00	443.01	0.000
	92.7368 - 90.3158		42.99	465.38	0.092	0.00	465.38	0.000
	90.3158 - 87.8947		57.78	488.30	0.118	0.00	488.30	0.000
	87.8947 - 85.4737		74.66	511.77	0.146	0.00	511.77	0.000
	85.4737 - 83.0526		94.95	535.79	0.177	0.00	535.79	0.000
	83.0526 - 80.6316		118.83	560.37	0.212	0.00	560.37	0.000
	80.6316 - 78.2105		147.76	585.49	0.252	0.00	585.49	0.000
	78.2105 - 75.7895		180.40	611.16	0.295	0.00	611.16	0.000

Section No.	Elevation ft	Size	M_{ux} kip-ft	ϕM_{nx} kip-ft	Ratio $\frac{M_{ux}}{\phi M_{nx}}$	M_{uy} kip-ft	ϕM_{ny} kip-ft	Ratio $\frac{M_{uy}}{\phi M_{ny}}$
	75.7895 - 73.3684		216.37	637.39	0.339	0.00	637.39	0.000
	73.3684 - 70.9474		254.81	664.17	0.384	0.00	664.17	0.000
	70.9474 - 68.5263		295.97	691.49	0.428	0.00	691.49	0.000
	68.5263 - 66.1053		339.06	719.37	0.471	0.00	719.37	0.000
	66.1053 - 63.6842		382.61	747.80	0.512	0.00	747.80	0.000
	63.6842 - 61.2632		426.63	776.78	0.549	0.00	776.78	0.000
	61.2632 - 58.8421		471.13	806.32	0.584	0.00	806.32	0.000
	58.8421 - 56.4211		516.10	832.25	0.620	0.00	832.25	0.000
	56.4211 - 54		561.54	857.80	0.655	0.00	857.80	0.000
	54 - 49.5833		277.02	904.88	0.306	0.00	904.88	0.000
L2	54 - 49.5833	TP35x25.0198x0.406	368.80	1259.50	0.293	0.00	1259.50	0.000
	49.5833 - 46.9737		696.46	1308.12	0.532	0.00	1308.12	0.000
	46.9737 - 44.364		747.64	1357.65	0.551	0.00	1357.65	0.000
	44.364 - 41.7544		799.37	1408.10	0.568	0.00	1408.10	0.000
	41.7544 - 39.1447		851.64	1459.47	0.584	0.00	1459.47	0.000
	39.1447 - 36.5351		904.44	1511.77	0.598	0.00	1511.77	0.000
	36.5351 - 33.9254		957.77	1564.98	0.612	0.00	1564.98	0.000
	33.9254 - 31.3158		1011.61	1619.12	0.625	0.00	1619.12	0.000
	31.3158 - 28.7061		1065.96	1674.18	0.637	0.00	1674.18	0.000
	28.7061 - 26.0965		1120.82	1730.15	0.648	0.00	1730.15	0.000
	26.0965 - 23.4868		1176.17	1787.05	0.658	0.00	1787.05	0.000
	23.4868 - 20.8772		1232.02	1844.87	0.668	0.00	1844.87	0.000
	20.8772 - 18.2675		1288.35	1903.60	0.677	0.00	1903.60	0.000
	18.2675 - 15.6579		1345.15	1963.26	0.685	0.00	1963.26	0.000
	15.6579 - 13.0482		1402.43	2023.84	0.693	0.00	2023.84	0.000
	13.0482 - 10.4386		1460.17	2085.34	0.700	0.00	2085.34	0.000
	10.4386 - 7.82895		1518.37	2147.77	0.707	0.00	2147.77	0.000
	7.82895 - 5.2193		1577.01	2211.10	0.713	0.00	2211.10	0.000
	5.2193 - 2.60965		1636.10	2275.37	0.719	0.00	2275.37	0.000
	2.60965 - 0		1695.62	2340.55	0.724	0.00	2340.55	0.000

Pole Shear Design Data

Section No.	Elevation ft	Size	Actual V_u K	ϕV_n K	Ratio $\frac{V_u}{\phi V_n}$	Actual T_u kip-ft	ϕT_n kip-ft	Ratio $\frac{T_u}{\phi T_n}$
L1	100 - 97.5789	TP26.4x17.06x0.281	1.82	559.53	0.003	0.00	810.93	0.000
	97.5789 - 95.1579		5.66	574.49	0.010	0.00	854.05	0.000
	95.1579 - 92.7368		5.84	589.45	0.010	0.00	898.29	0.000
	92.7368 - 90.3158		6.02	604.40	0.010	0.00	943.65	0.000
	90.3158 - 87.8947		6.20	619.36	0.010	0.00	990.13	0.000
	87.8947 - 85.4737		7.99	634.32	0.013	0.00	1037.72	0.000
	85.4737 - 83.0526		9.77	649.27	0.015	0.00	1086.43	0.000
	83.0526 - 80.6316		9.96	664.23	0.015	0.00	1136.25	0.000
	80.6316 - 78.2105		12.28	679.18	0.018	0.00	1187.19	0.000
	78.2105 - 75.7895		14.04	694.14	0.020	0.00	1239.25	0.000
	75.7895 - 73.3684		15.79	709.10	0.022	0.00	1292.43	0.000
	73.3684 - 70.9474		15.98	724.05	0.022	0.00	1346.72	0.000
	70.9474 - 68.5263		17.71	739.01	0.024	0.00	1402.13	0.000
	68.5263 - 66.1053		17.90	753.97	0.024	0.00	1458.67	0.000
	66.1053 - 63.6842		18.10	768.92	0.024	0.00	1516.31	0.000
	63.6842 - 61.2632		18.29	783.88	0.023	0.00	1575.08	0.000
	61.2632 - 58.8421		18.49	798.84	0.023	0.00	1634.96	0.000
	58.8421 - 56.4211		18.69	813.79	0.023	0.00	1687.55	0.000
	56.4211 - 54		18.88	824.65	0.023	0.00	1739.34	0.000
	54 - 49.5833		8.39	834.72	0.010	0.00	1834.83	0.000
L2	54 - 49.5833	TP35x25.0198x0.406	10.92	1185.92	0.009	0.00	2553.88	0.000
	49.5833 - 46.9737		19.52	1225.25	0.016	0.00	2652.45	0.000
	46.9737 - 44.364		19.73	1248.49	0.016	0.00	2752.88	0.000
	44.364 - 41.7544		19.94	1271.73	0.016	0.00	2855.19	0.000
	41.7544 - 39.1447		20.15	1294.97	0.016	0.00	2959.36	0.000
	39.1447 - 36.5351		20.35	1318.21	0.015	0.00	3065.39	0.000
	36.5351 - 33.9254		20.55	1364.68	0.015	0.00	3173.30	0.000
	33.9254 - 31.3158		20.75	1387.92	0.015	0.00	3283.07	0.000
	31.3158 - 28.7061		20.95	1411.16	0.015	0.00	3394.70	0.000
	28.7061 - 26.0965		21.14	1434.40	0.015	0.00	3508.21	0.000
	26.0965 -		21.33	1457.64	0.015	0.00	3623.57	0.000

Section No.	Elevation ft	Size	Actual V_u K	ϕV_n K	Ratio $\frac{V_u}{\phi V_n}$	Actual T_u kip-ft	ϕT_n kip-ft	Ratio $\frac{T_u}{\phi T_n}$
	23.4868							
	23.4868 - 20.8772		21.52	1480.88	0.015	0.00	3740.81	0.000
	20.8772 - 18.2675		21.70	1504.11	0.014	0.00	3859.92	0.000
	18.2675 - 15.6579		21.88	1527.35	0.014	0.00	3980.88	0.000
	15.6579 - 13.0482		22.06	1550.59	0.014	0.00	4103.72	0.000
	13.0482 - 10.4386		22.24	1573.83	0.014	0.00	4228.43	0.000
	10.4386 - 7.82895		22.41	1597.07	0.014	0.00	4354.99	0.000
	7.82895 - 5.2193		22.59	1620.31	0.014	0.00	4483.43	0.000
	5.2193 - 2.60965		22.75	1643.54	0.014	0.00	4613.73	0.000
	2.60965 - 0		22.92	1666.78	0.014	0.00	4745.90	0.000

Pole Interaction Design Data

Section No.	Elevation ft	Ratio $\frac{P_u}{\phi P_n}$	Ratio $\frac{M_{ux}}{\phi M_{nx}}$	Ratio $\frac{M_{uy}}{\phi M_{ny}}$	Ratio $\frac{V_u}{\phi V_n}$	Ratio $\frac{T_u}{\phi T_n}$	Comb. Stress Ratio	Allow. Stress Ratio	Criteria
L1	100 - 97.5789	0.000	0.011	0.000	0.003	0.000	0.011 ✔	1.000	4.8.2 ✔
	97.5789 - 95.1579	0.002	0.035	0.000	0.010	0.000	0.037 ✔	1.000	4.8.2 ✔
	95.1579 - 92.7368	0.002	0.065	0.000	0.010	0.000	0.067 ✔	1.000	4.8.2 ✔
	92.7368 - 90.3158	0.002	0.092	0.000	0.010	0.000	0.095 ✔	1.000	4.8.2 ✔
	90.3158 - 87.8947	0.002	0.118	0.000	0.010	0.000	0.121 ✔	1.000	4.8.2 ✔
	87.8947 - 85.4737	0.002	0.146	0.000	0.013	0.000	0.149 ✔	1.000	4.8.2 ✔
	85.4737 - 83.0526	0.003	0.177	0.000	0.015	0.000	0.180 ✔	1.000	4.8.2 ✔
	83.0526 - 80.6316	0.003	0.212	0.000	0.015	0.000	0.215 ✔	1.000	4.8.2 ✔
	80.6316 - 78.2105	0.004	0.252	0.000	0.018	0.000	0.256 ✔	1.000	4.8.2 ✔
	78.2105 - 75.7895	0.004	0.295	0.000	0.020	0.000	0.299 ✔	1.000	4.8.2 ✔
	75.7895 - 73.3684	0.004	0.339	0.000	0.022	0.000	0.344 ✔	1.000	4.8.2 ✔
	73.3684 - 70.9474	0.004	0.384	0.000	0.022	0.000	0.388 ✔	1.000	4.8.2 ✔
	70.9474 - 68.5263	0.004	0.428	0.000	0.024	0.000	0.433 ✔	1.000	4.8.2 ✔
	68.5263 - 66.1053	0.004	0.471	0.000	0.024	0.000	0.476 ✔	1.000	4.8.2 ✔
	66.1053 -	0.005	0.512	0.000	0.024	0.000	0.517	1.000	4.8.2 ✔

Section No.	Elevation ft	Ratio P_u / ϕP_n	Ratio M_{ux} / ϕM_{nx}	Ratio M_{uy} / ϕM_{ny}	Ratio V_u / ϕV_n	Ratio T_u / ϕT_n	Comb. Stress Ratio	Allow. Stress Ratio	Criteria
	63.6842						✔		
	63.6842 - 61.2632	0.005	0.549	0.000	0.023	0.000	0.554 ✔	1.000	4.8.2 ✔
	61.2632 - 58.8421	0.005	0.584	0.000	0.023	0.000	0.590 ✔	1.000	4.8.2 ✔
	58.8421 - 56.4211	0.005	0.620	0.000	0.023	0.000	0.625 ✔	1.000	4.8.2 ✔
	56.4211 - 54	0.005	0.655	0.000	0.023	0.000	0.660 ✔	1.000	4.8.2 ✔
	54 - 49.5833	0.002	0.306	0.000	0.010	0.000	0.309 ✔	1.000	4.8.2 ✔
L2	54 - 49.5833	0.002	0.293	0.000	0.009	0.000	0.295 ✔	1.000	4.8.2 ✔
	49.5833 - 46.9737	0.004	0.532	0.000	0.016	0.000	0.537 ✔	1.000	4.8.2 ✔
	46.9737 - 44.364	0.004	0.551	0.000	0.016	0.000	0.555 ✔	1.000	4.8.2 ✔
	44.364 - 41.7544	0.004	0.568	0.000	0.016	0.000	0.572 ✔	1.000	4.8.2 ✔
	41.7544 - 39.1447	0.004	0.584	0.000	0.016	0.000	0.588 ✔	1.000	4.8.2 ✔
	39.1447 - 36.5351	0.004	0.598	0.000	0.015	0.000	0.603 ✔	1.000	4.8.2 ✔
	36.5351 - 33.9254	0.004	0.612	0.000	0.015	0.000	0.617 ✔	1.000	4.8.2 ✔
	33.9254 - 31.3158	0.004	0.625	0.000	0.015	0.000	0.629 ✔	1.000	4.8.2 ✔
	31.3158 - 28.7061	0.005	0.637	0.000	0.015	0.000	0.641 ✔	1.000	4.8.2 ✔
	28.7061 - 26.0965	0.005	0.648	0.000	0.015	0.000	0.653 ✔	1.000	4.8.2 ✔
	26.0965 - 23.4868	0.005	0.658	0.000	0.015	0.000	0.663 ✔	1.000	4.8.2 ✔
	23.4868 - 20.8772	0.005	0.668	0.000	0.015	0.000	0.673 ✔	1.000	4.8.2 ✔
	20.8772 - 18.2675	0.005	0.677	0.000	0.014	0.000	0.682 ✔	1.000	4.8.2 ✔
	18.2675 - 15.6579	0.005	0.685	0.000	0.014	0.000	0.690 ✔	1.000	4.8.2 ✔
	15.6579 - 13.0482	0.005	0.693	0.000	0.014	0.000	0.698 ✔	1.000	4.8.2 ✔
	13.0482 - 10.4386	0.005	0.700	0.000	0.014	0.000	0.706 ✔	1.000	4.8.2 ✔
	10.4386 - 7.82895	0.005	0.707	0.000	0.014	0.000	0.712 ✔	1.000	4.8.2 ✔
	7.82895 - 5.2193	0.005	0.713	0.000	0.014	0.000	0.719 ✔	1.000	4.8.2 ✔
	5.2193 - 2.60965	0.006	0.719	0.000	0.014	0.000	0.725 ✔	1.000	4.8.2 ✔
	2.60965 - 0	0.006	0.724	0.000	0.014	0.000	0.730 ✔	1.000	4.8.2 ✔

Section Capacity Table

Section No.	Elevation ft	Component Type	Size	Critical Element	P K	$øP_{allow}$ K	% Capacity	Pass Fail
L1	100 - 49.5833	Pole	TP26.4x17.06x0.281	1	-8.19	1669.45	66.0	Pass
L2	49.5833 - 0	Pole	TP35x25.0198x0.406	2	-18.77	3333.57	73.0	Pass
							Summary	
						Pole (L2)	73.0	Pass
						RATING =	**73.0**	**Pass**

APPENDIX B

BASE LEVEL DRAWING

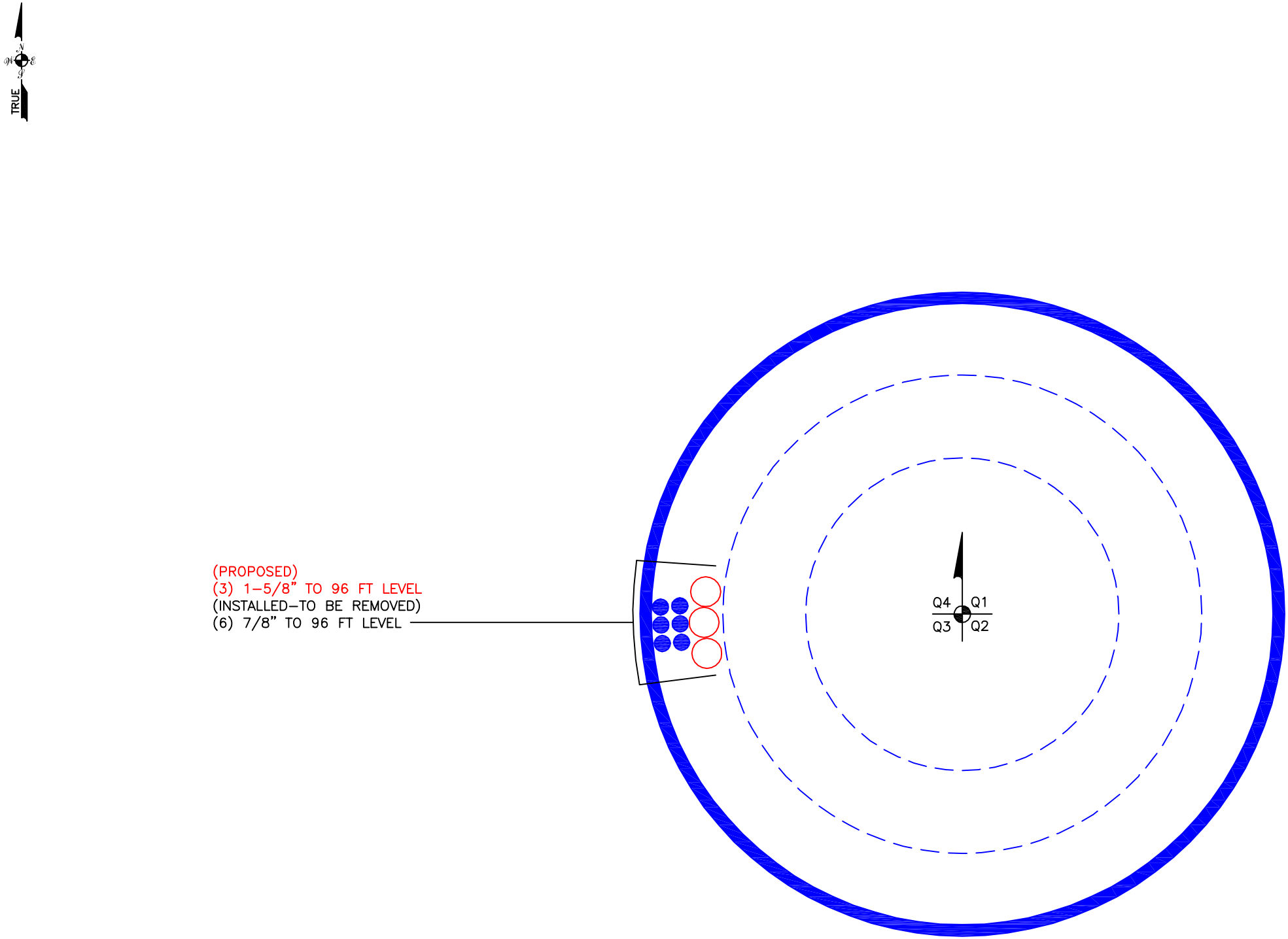
TRUE
N
W
E
S
(PROPOSED)
(3) 1–5/8" TO 96 FT LEVEL
(INSTALLED–TO BE REMOVED)
(6) 7/8" TO 96 FT LEVEL
Q4
Q1
Q3
Q2

APPENDIX C

ADDITIONAL CALCULATIONS

```
*****************************************************************************************
*                                                                                       *
* CAISSON - Pier Foundations Analysis and Design -  Copyright Power Line Systems, Inc. 1993-2011 *
*                                                                                       *
*****************************************************************************************
```

Project Title: OH-0083-B, Dublin Scioto Park, BU #875268
Project Notes:

Calculation Method: Full 8CD

******* I N P U T D A T A

Pier Properties

Diameter (ft)	Distance of Top of Pier above Ground (ft)	Concrete Strength (ksi)	Steel Yield Strength (ksi)
6.00	1.00	4.00	60.00

Soil Properties

Layer	Type	Thickness (ft)	Depth at Top of Layer (ft)	Density (lbs/ft^3)	CU (psf)	KP	PHI (deg)
1	Clay	3.33	0.00	125.0			
2	Clay	0.17	3.33	125.0	3000.0		
3	Clay	4.50	3.50	130.0	4500.0		
4	Clay	10.00	8.00	135.0	5000.0		

Design (Factored) Loads at Top of Pier

Moment (ft-k)	Axial Load (kips)	Shear Load (kips)	Additional Safety Factor Against Soil Failure

---

1696.0	19.0	23.00	5.20

******* R E S U L T S

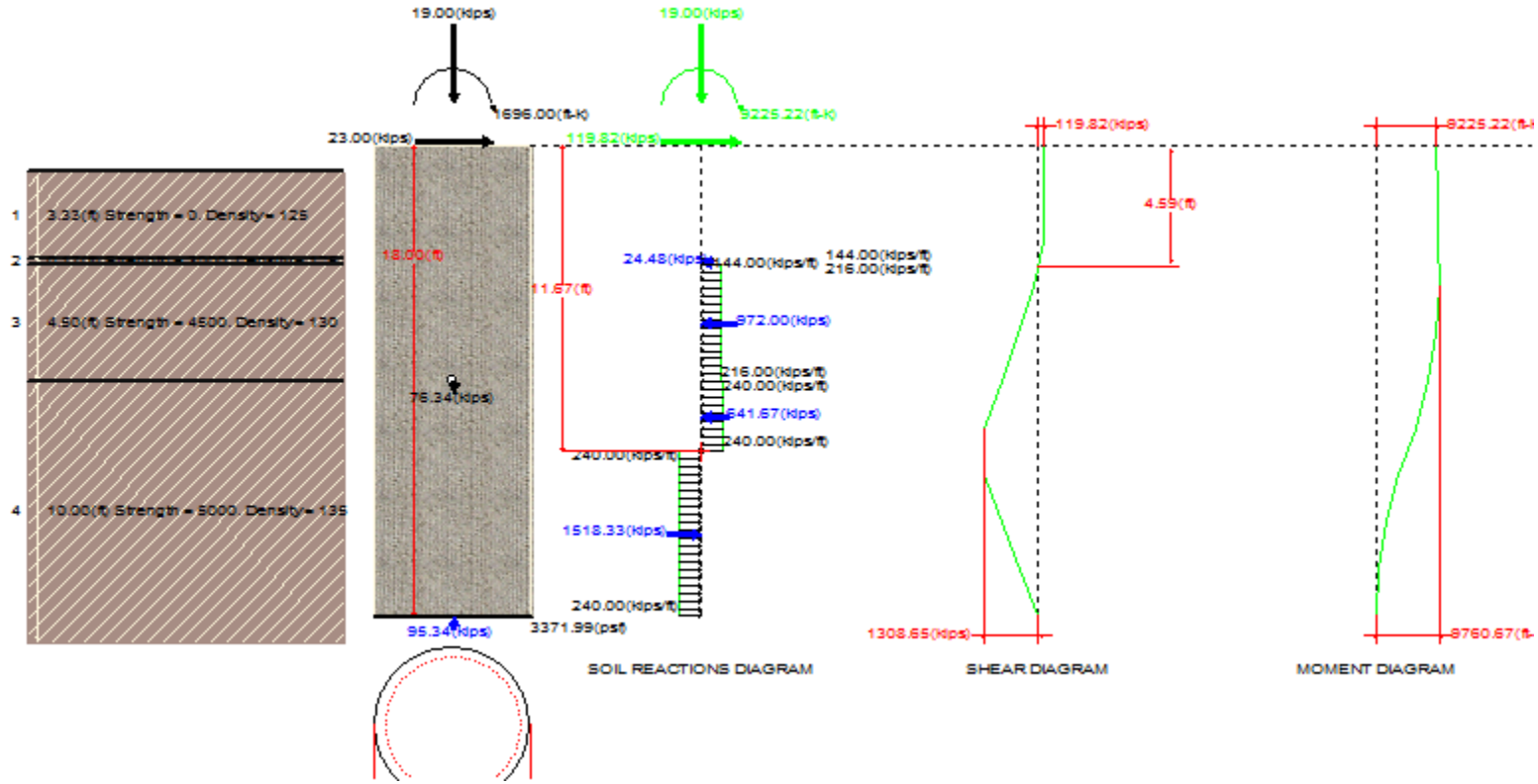

Calculated Pier Properties

Length (ft)	Weight (kips)	Pressure Due To Axial Load (psf)	Pressure Due To Weight (psf)	Total End-Bearing Pressure (psf)
18.000	76.341	672.0	2700.0	3372.0

Ultimate Resisting Forces Along Pier

Type	Distance of Top of Layer to Top of Pier (ft)	Thickness (ft)	Density (lbs/ft^3)	CU (psf)	KP	Force (kips)	Arm (ft)
Clay	1.00	3.33	125.0			0.00	2.67
Clay	4.33	0.17	125.0	3000.0		24.48	4.42
Clay	4.50	4.50	130.0	4500.0		972.00	6.75
Clay	9.00	2.67	135.0	5000.0		641.67	10.34
Clay	11.67	6.33	135.0	5000.0		-1518.33	14.84

Shear and Moments Along Pier

Distance below Top of Pier (ft)	Shear (with Safety Factor) (kips)	Moment (with Safety Factor) (ft-k)	Shear (without Safety Factor) (kips)	Moment (without Safety Factor) (ft-k)
0.00	119.8	9225.2	23.0	1774.1
1.80	119.8	9440.9	23.0	1815.6
3.60	119.8	9656.6	23.0	1857.0
5.40	-99.1	9760.7	-19.0	1877.1
7.20	-487.9	9232.5	-93.8	1775.5
9.00	-876.7	8004.4	-168.6	1539.3
10.80	-1308.7	6037.6	-251.7	1161.1
12.60	-1296.0	3499.2	-249.2	672.9
14.40	-864.0	1555.2	-166.2	299.1
16.20	-432.0	388.8	-83.1	74.8
18.00	0.0	0.0	0.0	0.0

Stiffened or Unstiffened, Ungrouted, Circular Base Plate - Any Rod Material

TIA Rev G Assumption: Clear space between bottom of leveling nut and top of concrete **not** exceeding (1)*(Rod Diameter)

Site Data

BU#:	*875268*
Site Name:	*Dublin Scioto Park*
App #:	*206097 Rev #2*
Pole Manufacturer:	*Other*

Reactions		
Mu:	1696	ft-kips
Axial, Pu:	19	kips
Shear, Vu:	23	kips
Eta Factor, η	0.5	TIA G (Fig. 4-4)

Anchor Rod Data		
Qty:	12	
Diam:	2.25	in
Rod Material:	A615-J	
Strength (Fu):	100	ksi
Yield (Fy):	75	ksi
Bolt Circle:	42.74	in

If No stiffeners, Criteria: AISC LRFD <-Only Applcable to Unstiffened Cases

Anchor Rod Results

			Rigid
Max Rod (Cu+ Vu/ń):	164.1	Kips	AISC LRFD
Allowable Axial, Φ*Fu*Anet:	260.0	Kips	φ*Tn
Anchor Rod Stress Ratio:	63.1%	**Pass**	

Plate Data		
Diam:	48.74	in
Thick:	2.75	in
Grade:	60	ksi
Single-Rod B-eff:	9.38	in

Base Plate Results Flexural Check

			Rigid
Base Plate Stress:	21.0	ksi	AISC LRFD
Allowable Plate Stress:	54.0	ksi	φ*Fy
Base Plate Stress Ratio:	38.9%	**Pass**	Y.L. Length: 24.53

Stiffener Data (Welding at both sides)		
Config:	0	*
Weld Type:		
Groove Depth:		in **
Groove Angle:		degrees
Fillet H. Weld:		<-- Disregard
Fillet V. Weld:		in
Width:		in
Height:		in
Thick:		in
Notch:		in
Grade:		ksi
Weld str.:		ksi

n/a

Stiffener Results

Horizontal Weld :	n/a
Vertical Weld:	n/a
Plate Flex+Shear, fb/Fb+(fv/Fv)^2:	n/a
Plate Tension+Shear, ft/Ft+(fv/Fv)^2	n/a
Plate Comp. (AISC Bracket):	n/a

Pole Results

Pole Punching Shear Check: n/a

Pole Data		
Diam:	35	in
Thick:	0.406	in
Grade:	65	ksi
# of Sides:	12	"0" IF Round
Fu	80	ksi
Reinf. Fillet Weld	0	"0" if None

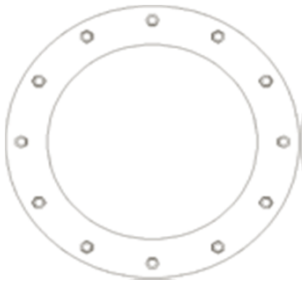

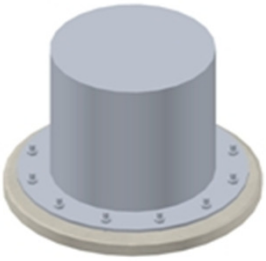

* 0 = none, 1 = every bolt, 2 = every 2 bolts, 3 = 2 per bolt

** Note: for complete joint penetration groove welds the groove depth must be exactly 1/2 the stiffener thickness for calculation purposes

Moment Capacity of Drilled Concrete Shaft (Caisson) for TIA Rev F or G

Note: Shaft assumed to have ties, not spiral, transverse reinforcing

Site Data

BU#:	*875268*
Site Name:	*Dublin Scioto Park*
App #:	*206097 Rev #2*

Loads Already Factored		
For M (WL)	1.3	<----Disregard
For P (DL)	1.3	<----Disregard

Pier Properties

Concrete:

Pier Diameter =	6.0	ft
Concrete Area =	4071.5	in^2

Reinforcement:

Clear Cover to **Tie**=	8.00	in
Horiz. **Tie** Bar Size=	4	
Vert. Cage Diameter =	4.47	ft
Vert. Cage Diameter =	53.59	in
Vertical Bar Size =	11	
Bar Diameter =	1.41	in
Bar Area =	1.56	in^2
Number of Bars =	32	
As Total=	49.92	in^2
A s/ Aconc, Rho:	0.0123	1.23%

ACI 10.5 , ACI 21.10.4, and IBC 1810.

Min As for Flexural, Tension Controlled, Shafts:

(3)*(Sqrt(f'c)/Fy:	0.0032
200 / Fy:	0.0033

Minimum Rho Check:

Actual Req'd Min. Rho:	0.33%	Flexural
Provided Rho:	1.23%	**OK**

Ref. Shaft Max Axial Capacities, ϕ Max(Pn or Tn):		
Max Pu = (φ=0.65) Pn.		
Pn per ACI 318 (10-2)	8667.66	kips
at Mu=(ϕ=0.65)Mn=	4234.40	ft-kips
Max Tu, (φ=0.9) Tn =	2695.68	kips
at Mu=ϕ=(0.90)Mn=	0.00	ft-kips

Maximum Shaft Superimposed Forces

TIA Revision:	G	
Max. Factored Shaft Mu:	1884.8	ft-kips **(* Note)**
Max. Factored Shaft Pu:	19	kips
Max Axial Force Type:	Comp.	

(*) Note: Max Shaft Superimposed Moment does not necessarily equal to the shaft top reaction moment

Load Factor	**Shaft Factored Loads**		
1.00	Mu:	1884.8	ft-kips
1.00	Pu:	19	kips

Material Properties

Concrete Comp. strength, f'c =	4000	psi
Reinforcement yield strength, Fy =	60	ksi
Reinforcing Modulus of Elasticity, E =	29000	ksi
Reinforcement yield strain =	0.00207	
Limiting compressive strain =	0.003	

ACI 318 Code

Select Analysis ACI Code=	2005

Seismic Properties

Seismic Design Category =	D
Seismic Risk =	**High**

Solve (Run) <-- Press Upon Completing All Input

Results:

Governing Orientation Case: **1**

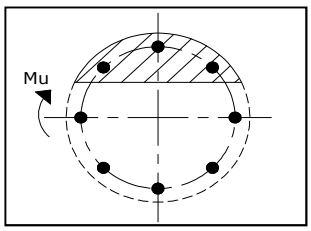

Case 1

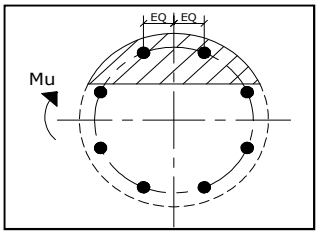

Case 2

Dist. From Edge to Neutral Axis:	**15.99**	in
Extreme Steel Strain, ϵt:	**0.0088**	
	ϵt > 0.0050, Tension Controlled	
Reduction Factor,φ:	**0.900**	

Output Note: Negative Pu=Tension

For Axial Compression, φ Pn = Pu:	19.00	kips
Drilled Shaft Moment Capacity, φMn:	**5875.78**	ft-kips
Drilled Shaft Superimposed Mu:	**1884.80**	ft-kips

(Mu/φMn, Drilled Shaft Flexure CSR:	**32.1%**

ADMINISTRATIVE REVIEW APPLICATION

(Code Section 99.06, 153.037)

CITY OF DUBLIN

Land Use and
Long Range Planning
5800 Shier-Rings Road
Dublin, Ohio 43016-1236

Phone/ TDD: 614-410-4600
Fax: 614-410-4747
Web Site: www.dublin.oh.us

I. PLEASE CHECK THE TYPE OF APPLICATION:

COIC Districts
Select District:

- ☐ HDP
- ☐ LDP
- ☐ I-VC
- ☐ I-CC
- ☑ Wireless Communication Facility

Application Type
(COIC Only)

- ☐ Pre-Application Review
- ☐ Development Plan Review
- ☐ Administrative Review
- ☐ Administrative Departures

Please utilize the applicable *Supplemental Application Requirements* sheet for additional submittal requirements.

II. PROPERTY INFORMATION: This section must be completed.

Property Address(es): 7377 Riverside Drive Dublin OH 43017	
Tax ID/Parcel Number(s): 273-008821 273-008822 273-008823 273-008824 273-008825 ** ** 273-008826-80 ****	Parcel Size(s) (Acres): 0.100
Existing Land Use/Development: [495] Other Commercial	Existing Zoning:

PLEASE COMPLETE THE FOLLOWING:

Describe the Existing Land Use/Development: Wireless facility / monopole Tree

Describe the Request: Add three antennas to existing Rad center, no groundwork.

III. CURRENT PROPERTY OWNER(S): Please attach additional sheets if needed.

Name (Individual or Organization): Village of Dublin Ohio	
Mailing Address: (Street, City, State, Zip Code) 5200 Emerald PKWY Dublin OH 43017	
Daytime Telephone: 614 410 4400	Fax:
Email or Alternate Contact Information:	

IV. APPLICANT(S): This is the person(s) who is submitting the application if different than the property owner(s) listed in part III. Please complete if applicable.

Name: Crown Castle	Applicant is also property owner: yes ☐ no ☑
Organization (Owner, Developer, Contractor, etc.): Crown Castle	
Mailing Address: (Street, City, State, Zip Code) 10300 Ormsby Park Place Suite 501 Louisville Ky 40223	
Daytime Telephone: 502 318 1325	Fax:
Email or Alternate Contact Information:	

V. REPRESENTATIVE(S) OF APPLICANT / PROPERTY OWNER: This is the person(s) who is submitting the application on behalf of the applicant listed in part IV or property owner listed in part III. Please complete if applicable.

Name: Bryan Brawner	
Organization (Owner, Developer, Contractor, etc.): Crown Castle	
Mailing Address: (Street, City, State, Zip Code) 10300 Ormsby Park Place Suite 501 Louisville Ky 40223	
Daytime Telephone: 502-318-1325	Fax:
Email or Alternate Contact Information: bryan.brawner@crowncastle.com	

VI. AUTHORIZATION FOR OWNER'S APPLICANT or REPRESENTATIVE(S): If the applicant is not the property owner, this section must be completed and notarized.

I _____, the owner, hereby authorize _____ to act as my applicant or representative(s) in all matters pertaining to the processing and approval of this application, including modifying the project. I agree to be bound by all representations and agreements made by the designated representative.

Signature of Current Property Owner:	Date:

☐ Check this box if the Authorization for Owner's Applicant or Representative(s) is attached as a separate document

Subscribed and sworn before me this _____ day of _____, 20 _____

State of _____

County of _____ Notary Public _____

VII. AUTHORIZATION TO VISIT THE PROPERTY: Site visits to the property by City representatives are essential to process this application. The Owner/Applicant, as noted below, hereby authorizes City representatives to visit, photograph and post a notice on the property described in this application.

I Bryan Brawner, the owner or authorized representative, hereby authorize City representatives to visit, photograph and post a notice on the property described in this application.

Signature of applicant or authorized representative: Bryan Brawner	Date: 2/10/2014

VIII. UTILITY DISCLAIMER: The Owner/Applicant acknowledges the approval of this request for review by the Dublin Planning and Zoning Commission and/or Dublin City Council does not constitute a guarantee or binding commitment that the City of Dublin will be able to provide essential services such as water and sewer facilities when needed by said Owner/Applicant.

I Bryan Brawner, the owner or authorized representative, acknowledge that approval of this request does not constitute a guarantee or binding commitment that the City of Dublin will be able to provide essential services such as water and sewer facilities when needed by said Owner/Applicant.

Signature of applicant or authorized representative: Bryan Brawner	Date: 2/10/2014

IX. APPLICANT'S AFFIDAVIT: This section must be completed and notarized.

I Bryan Brawner Bryan Brawner, the owner or authorized representative, have read and understand the contents of this application. The information contained in this application, attached exhibits and other information submitted is complete and in all respects true and correct, to the best of my knowledge and belief.

Signature of applicant or authorized representative: Bryan Brawner	Date: 2/10/2014

Subscribed and sworn to before me this 10th day of February, 20 14

State of Kentucky

County of Jefferson

Notary Public Barbara Saive

BARBARA SAIVE
My Commission Expires
NOTARY PUBLIC
09-14-2016
STATE AT LARGE, KENTUCKY

FOR OFFICE USE ONLY			
Amount Received:	Application No:	ART Decision:	ART Action:
Receipt No:	Map Zone:	Date Received:	Received By:
Type of Request:			
N, S, E, W (Circle) Side of:			
N, S, E, W (Circle) Side of Nearest Intersection:			
Distance from Nearest Intersection:			
Existing Zoning District:			

CITY OF DUBLIN.

WIRELESS COMMUNICATION FACILITY

Application Requirement Checklist

Application & Supporting Materials

1 **APPLICATION FEE**

2 **CD** - ONE (1) DIGITAL COPY CONTAINING ALL APPLICATION MATERIALS REQUIRED FOR SUBMISSION.
Files must be labeled and submitted as PDFs or JPEGs, or other appropriate electronic format.

3 **ORIGINAL SIGNED AND NOTARIZED ADMINISTRATIVE REVIEW TEAM APPLICATION FORM** - ONE (1) ORIGINAL

4 **LEGAL DESCRIPTION AND/OR PROPERTY SURVEY FOR EACH PARCEL INCLUDED** - ONE (1) COPY

5 **LIST OF PROPERTY OWNERS AND REGISTERED HOMEOWNERS ASSOCIATIONS WITHIN 300 FEET** - ONE (1) COPY THAT INCLUDES:

- A Parcel number
- B Owner name
- C Complete address

6 **APPLICATION STATEMENT THAT INCLUDES THE FOLLOWING:**

- A Describe the proposed wireless communication facility, including type, height, location, and other relevant details.
- B State how the proposal is compliant with the requirements of Code Section 99.06(B)(4) and all applicable federal, state or local laws.
- C Explain the applicant's ability or inability to use existing towers, other structures or alternative technology not requiring the use of towers or structures, to provide the services planned for the use of the proposed new tower.

7 **NOTARIZED STATEMENT BY THE APPLICANT AFFIRMING THAT THE CONSTRUCTION OF THE TOWER WILL ACCOMMODATE CO-LOCATION OF ADDITIONAL ANTENNAS FOR FUTURE USERS**

8 **24-HOUR EMERGENCY CONTACT INFORMATION**
For entities providing the backhaul network for the tower(s) described in the application and other wireless communications sites owned or operated by the applicant in the municipality.

9 **AN INVENTORY OF THE EXISTING AND APPROVED TOWERS, ANTENNAS, AND ALTERNATIVE TOWER STRUCTURES**
Must include towers, antennas, and alternative tower structures within the jurisdiction or within two miles of the border of the city. (The City may share this information with other applicants or other organizations seeking to locate towers or antennas within the jurisdiction of Dublin or other communities. However, the City is not, by sharing this information, in any way representing or warranting that the sites are available or suitable.) THE INVENTORY SHALL SHOW EACH TOWER AND ANTENNA AND INCLUDE:

- A A map showing each location, by address, including straight-line distances between each tower.
- B Height and design of each existing tower.
- C Tower operator/owner.
- D Co-location capability of each tower, including alternative tower structures.

Land Use and Long Range Planning | 5800 Shier Rings Road Dublin, Ohio 43016 | **Phone:** 614-410-4600 | **Fax:** 614-410-4747 | Web Site: www.dublin.oh.us

Plans & Maps

All plans require ONE (1) large (24 x 36) and TEN (10) small (11 x 17) copies to scale and dimensioned unless otherwise noted. The scale may not be less than 1" = 50'. Plans must be stapled, collated, and folded. Additional copies of plans may be requested prior to the case being placed on a meeting agenda.

1 SITE PLAN - INCLUDE THE FOLLOWING:

- A The location, type and height of the proposed tower (height of the structure and overall height from grade)
- B Existing land uses and existing zoning districts.
- C Adjacent land uses and zoning districts (including other municipalities).
- D Adjacent roadways and access.
- E Setbacks between the proposed tower and auxiliary structures and the nearest property lines.
- F The separation distance from other towers described in the inventory of existing sites. The applicant shall also identify the type of construction of the existing tower(s) and the owner/operator fo the existing tower(s), if known.
- G Existing and proposed topography.

2 LANDSCAPE PLAN - INCLUDE THE FOLLOWING:

- A Specific landscape materials, locations and installation sizes in accordance with the landscape code provisions of zoning code section 153.130, and 153.133(c) in particular.
- B Location and method of fencing, if any, including height, material, style and color.
- C If applicable, the method of camouflage and illumination.

3 ELEVATIONS

Show the proposed tower and any other associated structures.

4 MATERIALS - TEN (10) 8.5 x 11 CUT-SHEETS AND DESCRIPTIONS OF PROPOSED MATERIALS

Any materials relevant to the proposal.

5 PROPOSED SIGNS

Include dimensions, colors, and text.

Land Use and Long Range Planning | 5800 Shier Rings Road Dublin, Ohio 43016 | **Phone:** 614-410-4600 | **Fax:** 614-410-4747 | Web Site: www.dublin.oh.us

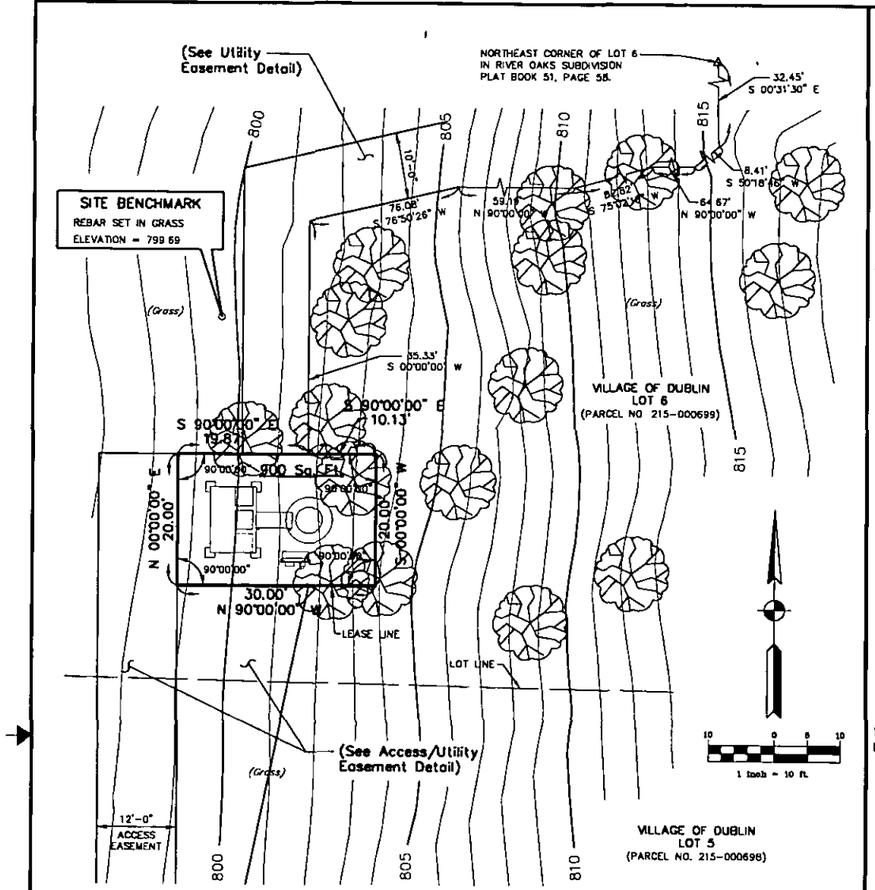

LEASE AREA DETAIL

ZONING

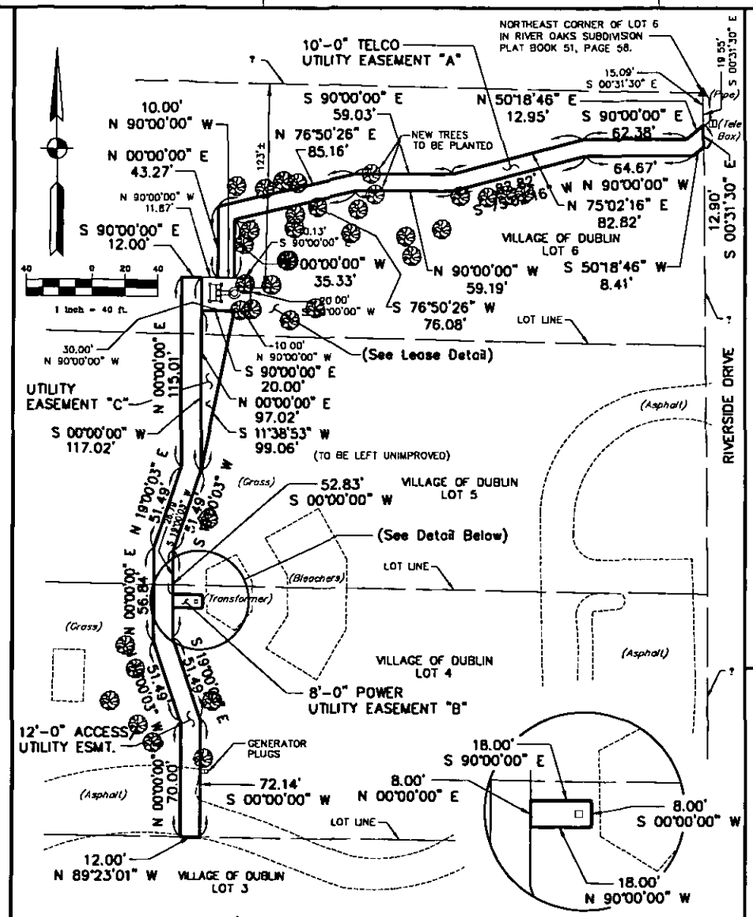

ACCESS/UTILITY EASEMENT DETAIL

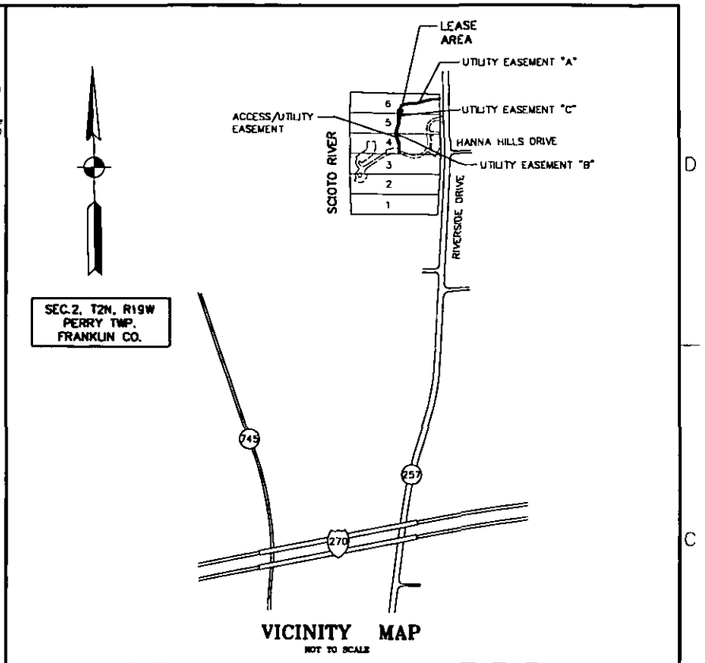

VICINITY MAP

NOT TO SCALE

Legal description – Lease Area

A part of Lot 6 in River Oaks Subdivision, the plat of which is recorded in Plat Book 51, page 58, Franklin County, Ohio, described as follows: Commencing at the northeast corner of said Lot 6; thence South 0 degrees 31 minutes 30 seconds East 32.45 feet along the east line of said lot; thence South 50 degrees 18 minutes 46 seconds West 8.41 feet; thence North 90 degrees 00 minutes 00 seconds West 64.67 feet; thence South 75 degrees 02 minutes 16 seconds West 82.82 feet; thence North 90 degrees 00 minutes 00 seconds West 59.19 feet; thence South 76 degrees 50 minutes 26 seconds West 76.08 feet; thence South 0 degrees 00 minutes 00 seconds West 35.33 feet to the point of beginning of this description thence South 90 degrees 00 minutes 00 seconds East 10.13 feet; thence South 0 degrees 00 minutes 00 seconds West 20.00 feet; thence North 90 degrees 00 minutes 00 seconds West 30.00 feet; thence North 0 degrees 00 minutes 00 seconds East 20.00 feet; thence South 90 degrees 00 minutes 00 seconds East 19.87 feet to the point of beginning and containing 600 square feet, more or less.

Subject to the right-of-ways, easements, and restrictions of record.

Legal description – Utility Easement "A"

A part of Lot 6 in River Oaks Subdivision, the plat of which is recorded in Plat Book 51, page 58, Franklin County, Ohio, described as follows: Beginning at a point on the east line of said Lot 6, which point is South 0 degrees 31 minutes 30 seconds East 19.55 feet from the northeast corner of said Lot 6; thence continuing South 0 degrees 31 minutes 30 seconds East 12.90 feet along the east line of said Lot 6; thence South 50 degrees 18 minutes 46 seconds West 8.41 feet; thence North 90 degrees 00 minutes 00 seconds West 64.67 feet; thence South 75 degrees 02 minutes 16 seconds West 82.82 feet; thence North 90 degrees 00 minutes 00 seconds West 59.19 feet; thence South 76 degrees 50 minutes 26 seconds West 76.08 feet; thence South 0 degrees 00 minutes 00 seconds West 35.33 feet; thence North 90 degrees 00 minutes 00 seconds West 10.00 feet; thence North 0 degrees 00 minutes 00 seconds East 43.27 feet; thence North 76 degrees 50 minutes 26 seconds East 85.16 feet; thence South 90 degrees 00 minutes 00 seconds East 59.03 feet; thence North 75 degrees 02 minutes 16 seconds East 82.82 feet; thence South 90 degrees 00 minutes 00 seconds East 62.38 feet; thence North 50 degrees 18 minutes 46 seconds East 12.95 feet to the point of beginning and containing 3,361 square feet, more or less.

Subject to the right-of-ways, easements, and restrictions of record.

Legal description – Access/Utility Easement

A part of Lots 4, 5, and 6 in River Oaks Subdivision, the plat of which is recorded in Plat Book 51, page 58, Franklin County, Ohio, described as follows: Commencing at the northeast corner of said Lot 6, thence South 0 degrees 31 minutes 30 seconds East 32.45 feet along the east line of said Lot 6; thence South 50 degrees 18 minutes 46 seconds West 8.41 feet; thence North 90 degrees 00 minutes 00 seconds West 64.67 feet, thence South 75 degrees 02 minutes 16 seconds West 82.82 feet; thence North 90 degrees 00 minutes 00 seconds West 59.19 feet; thence South 76 degrees 50 minutes 26 seconds West 76.08 feet; thence South 0 degrees 00 minutes 00 seconds West 35.33 feet; thence North 90 degrees 00 minutes 00 seconds West 19.87 feet to the point of beginning of this description: thence South 0 degrees 00 minutes 00 seconds West 117.02 feet; thence South 19 degrees 00 minutes 03 seconds West 51.49 feet; thence South 0 degrees 00 minutes 00 seconds West 52.83 feet; thence South 19 degrees 00 minutes 03 seconds East 51.49 feet; thence South 0 degrees 00 minutes 00 seconds West 72.14 feet to the south line of said Lot 4, thence North 89 degrees 23 minutes 01 second West 12.00 feet along said south line; thence North 0 degrees 00 minutes 00 seconds East 70.00 feet; thence North 19 degrees 00 minutes 03 seconds West 51.49 feet; thence North 0 degrees 00 minutes 00 seconds East 56.84 feet, thence North 19 degrees 00 minutes 03 seconds East 51.49 feet; thence North 0 degrees 00 minutes 00 seconds West 115.01 feet; thence South 90 degrees 00 minutes 00 seconds East 12.00 feet to the point of beginning and containing 4,139 square feet, more or less

Subject to the right-of-ways, easements, and restrictions of record.

Legal description – Utility Easement "B"

A part of Lot 4 in River Oaks Subdivision, the plat of which is recorded in Plat Book 51, page 58, Franklin County, Ohio, described as follows: Commencing at the northeast corner of said Lot 6; thence South 0 degrees 31 minutes 30 seconds East 32.45 feet along the east line of said Lot 6; thence South 50 degrees 18 minutes 46 seconds West 8.41 feet; thence North 90 degrees 00 minutes 00 seconds West 64.67 feet; thence South 75 degrees 02 minutes 16 seconds West 82.82 feet; thence North 90 degrees 00 minutes 00 seconds West 59.19 feet, thence South 76 degrees 50 minutes 26 seconds West 76.08 feet, thence South 0 degrees 00 minutes 00 seconds West 35.33 feet; thence South 90 degrees 00 minutes 00 seconds East 10.13 feet; thence South 0 degrees 00 minutes 00 seconds West 20.00 feet, thence North 90 degrees 00 minutes 00 seconds West 30.00 feet; thence South 0 degrees 00 minutes 00 seconds West 97.02 feet; thence South 19 degrees 00 minutes 03 seconds West 51.49 feet; thence South 0 degrees 00 minutes 00 seconds West 26.79 feet to the point of beginning of this description: thence South 90 degrees 00 minutes 00 seconds East 18.00 feet; thence South 0 degrees 00 minutes 00 seconds West 8.00 feet; thence North 90 degrees 00 minutes 00 seconds West 18.00 feet; thence North 0 degrees 00 minutes 00 seconds East 8.00 feet to the point of beginning and containing 144 square feet, more or less.

Subject to the right-of-ways, easements, and restrictions of record.

Legal description – Utility Easement "C"

A part of Lots 5 and 6 in River Oaks Subdivision, the plat of which is recorded in Plat Book 51, page 58, Franklin County, Ohio, described as follows: Commencing at the northeast corner of said Lot 6; thence South 0 degrees 31 minutes 30 seconds East 32.45 feet along the east line of said Lot 6; thence South 50 degrees 18 minutes 46 seconds West 8.41 feet; thence North 90 degrees 00 minutes 00 seconds West 64.67 feet; thence South 75 degrees 02 minutes 16 seconds West 82.82 feet; thence North 90 degrees 00 minutes 00 seconds West 59.19 feet, thence South 76 degrees 50 minutes 26 seconds West 76.08 feet; thence South 0 degrees 00 minutes 00 seconds West 35.33 feet; thence South 90 degrees 00 minutes 00 seconds East 10.13 feet; thence South 0 degrees 00 minutes 00 seconds West 20.00 feet; thence North 90 degrees 00 minutes 00 seconds West 10.00 feet to the point of beginning of this description: thence South 11 degrees 38 minutes 53 seconds West 99.06 feet; thence North 0 degrees 00 minutes 00 seconds East 97.02 feet; thence South 90 degrees 00 minutes 00 seconds East 20.00 feet to the point of beginning and containing 970 square feet, more or less.

Subject to the right-of-ways, easements, and restrictions of record.

Notes:

1) According to the reading taken with a GPS receiver and checked with the United States Department of the Interior Geological Survey Map, Northwest Columbus, Ohio the tower center is located North 40 degrees 07 minutes 04 seconds Latitude and West 83 degrees 06 minutes 39 seconds Longitude.

2) The elevations are referenced to the USC & GS datum.

3) In the unpaved areas, the 12 ft. wide access road shall be 2" of #53 stone over a 6" layer of 2" diameter stone (remove topsoil).

4) It is recommended that the contractor notify Ohio Underground (1-800-362-2764) 48 hours in advance of construction, for the exact location of existing utilities

5) Boundary locations are approximate and based on the information provided by Sprint PCS. No comparisons were made with adjoiners deeds.

NO	DATE	REVISIONS	BY	CHK	APP'D
7	3/10/99	ADDED UTILITY EASEMENT "C"	PM	WBB	LAM
6	9/29/98	REVISED LEASE AREA LOCATION	WBB	LAM	JHV
5	8/18/98	REVISED LEASE AREA	WBB	LAM	JHV
4	7/26/98	CHANGE LANDSCAPE AND FENCE	LAM	LAM	LCS
3	7/20/98	ADDED SETBACK & DIMENSIONS	PM	WBB	JHV
2	6/26/98	REVISED LEASE AREA & U/E	WBB	LAM	JHV
1	6/18/98	REVISED LEASE AREA & U/E	DFS	WBB	JHV

DATE: 02/03/98 CHECKED BY: L.A.M. DRAWN BY: W.B.B.

FIRST GROUP ENGINEERING INC.
CONSULTING ENGINEERS
5714 W. 74TH STREET, INDIANAPOLIS, INDIANA
PH. (317) 290-9549 FAX (317) 290-9560

SCIOTO PARK
7377 RIVERSIDE DRIVE
COLUMBUS, OH 43016
FRANKLIN COUNTY

Sprint PCS
2 EASTON OVAL, SUITE 400
COLUMBUS, OHIO 43219
CONSTRUCTION DRAWING FOR
SITE NO. CB03XC026D

Sprint PCS

SITE PLAN AND ACCESS DETAILS

SITE NUMBER	DRAWING NUMBER	REV
CB03XC026D	C1	

ClibPDF - www.fastio.com

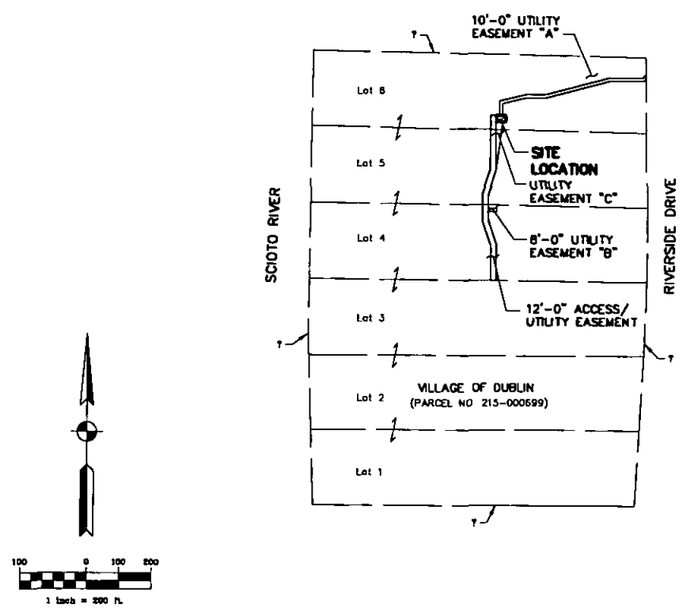

EASEMENT & LEASE AREA PLAN

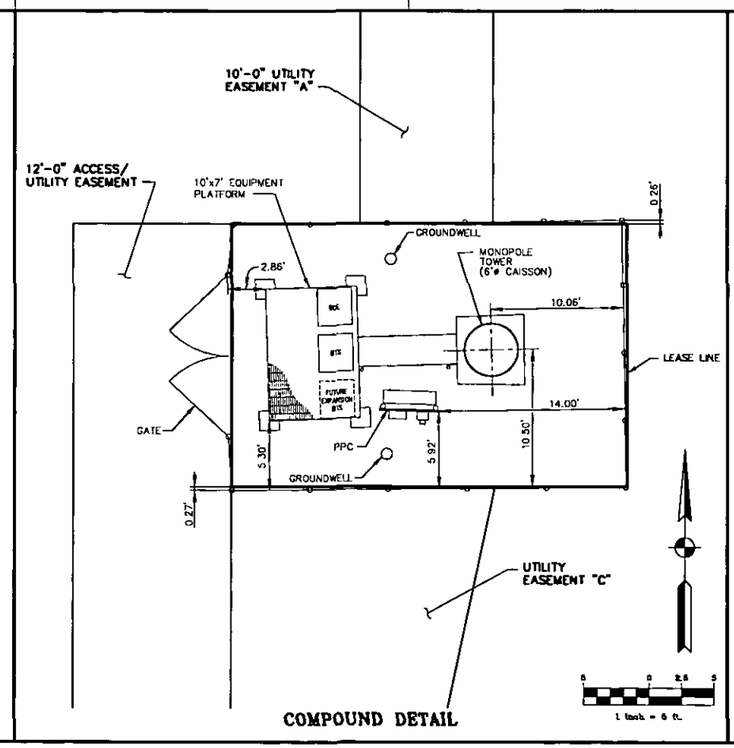

COMPOUND DETAIL

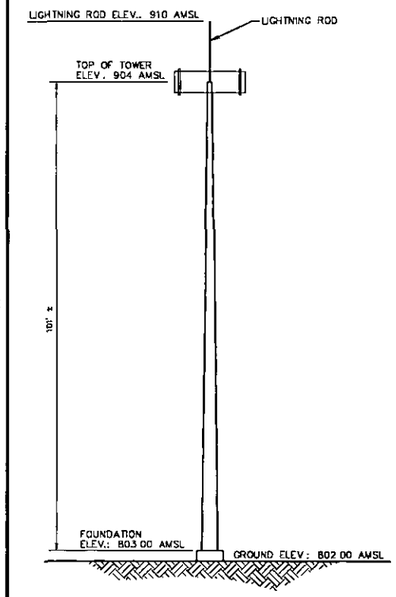

TOWER ELEVATION

Legal description – Lease Area

A part of Lot 6 in River Oaks Subdivision, the plat of which is recorded in Plat Book 51, page 58, Franklin County, Ohio, described as follows: Commencing at the northeast corner of said Lot 6; thence South 0 degrees 31 minutes 30 seconds East 32.45 feet along the east line of said lot; thence South 50 degrees 18 minutes 46 seconds West 8.41 feet; thence North 90 degrees 00 minutes 00 seconds West 64.67 feet; thence South 75 degrees 02 minutes 16 seconds West 82.82 feet; thence North 90 degrees 00 minutes 00 seconds West 59.19 feet, thence South 76 degrees 50 minutes 26 seconds West 76.08 feet; thence South 0 degrees 00 minutes 00 seconds West 35.33 feet to the point of beginning of this description: thence South 90 degrees 00 minutes 00 seconds East 10.13 feet; thence South 0 degrees 00 minutes 00 seconds West 20.00 feet; thence North 90 degrees 00 minutes 00 seconds West 30.00 feet; thence North 0 degrees 00 minutes 00 seconds East 20.00 feet; thence South 90 degrees 00 minutes 00 seconds East 19.87 feet to the point of beginning and containing 600 square feet, more or less.

Subject to the right-of-ways, easements, and restrictions of record.

Legal description – Utility Easement "A"

A part of Lot 6 in River Oaks Subdivision, the plat of which is recorded in Plat Book 51, page 58, Franklin County, Ohio, described as follows: Beginning at a point on the east line of said Lot 6, which point is South 0 degrees 31 minutes 30 seconds East 19.55 feet from the northeast corner of said Lot 6; thence continuing South 0 degrees 31 minutes 30 seconds East 12.90 feet along the east line of said Lot 6; thence South 50 degrees 18 minutes 46 seconds West 8.41 feet; thence North 90 degrees 00 minutes 00 seconds West 64.67 feet; thence South 75 degrees 02 minutes 16 seconds West 82.82 feet; thence North 90 degrees 00 minutes 00 seconds West 59.19 feet; thence South 76 degrees 50 minutes 26 seconds West 76.08 feet; thence South 0 degrees 00 minutes 00 seconds West 35.33 feet; thence North 90 degrees 00 minutes 00 seconds West 10.00 feet; thence North 0 degrees 00 minutes 00 seconds East 43.27 feet; thence North 76 degrees 50 minutes 26 seconds East 85.16 feet; thence South 90 degrees 00 minutes 00 seconds East 59.03 feet; thence North 75 degrees 02 minutes 16 seconds East 82.82 feet; thence South 90 degrees 00 minutes 00 seconds East 62.38 feet, thence North 50 degrees 18 minutes 46 seconds East 12.95 feet to the point of beginning and containing 3,361 square feet, more or less.

Subject to the right-of-ways, easements, and restrictions of record.

Legal description – Utility Easement "B"

A part of Lot 4 in River Oaks Subdivision, the plat of which is recorded in Plat Book 51, page 58, Franklin County, Ohio, described as follows: Commencing at the northeast corner of said Lot 6; thence South 0 degrees 31 minutes 30 seconds East 32.45 feet along the east line of said Lot 6; thence South 50 degrees 18 minutes 46 seconds West 8.41 feet; thence North 90 degrees 00 minutes 00 seconds West 64.67 feet; thence South 75 degrees 02 minutes 16 seconds West 82.82 feet; thence North 90 degrees 00 minutes 00 seconds West 59.19 feet; thence South 76 degrees 50 minutes 26 seconds West 76.08 feet; thence South 0 degrees 00 minutes 00 seconds West 35.33 feet; thence South 90 degrees 00 minutes 00 seconds East 10.13 feet; thence South 0 degrees 00 minutes 00 seconds West 20.00 feet; thence North 90 degrees 00 minutes 00 seconds West 30.00 feet; thence South 0 degrees 00 minutes 00 seconds West 97.02 feet; thence South 19 degrees 00 minutes 03 seconds West 51.49 feet; thence South 0 degrees 00 minutes 00 seconds West 25.79 feet to the point of beginning of this description: thence South 90 degrees 00 minutes 00 seconds East 18.00 feet; thence South 0 degrees 00 minutes 00 seconds West 8.00 feet; thence North 90 degrees 00 minutes 00 seconds West 18.00 feet; thence North 0 degrees 00 minutes 00 seconds East 8.00 feet to the point of beginning and containing 144 square feet, more or less.

Subject to the right-of-ways, easements, and restrictions of record.

Legal description – Utility Easement "C"

A part of Lot 4 in River Oaks Subdivision, the plat of which is recorded in Plat Book 51, page 58, Franklin County, Ohio, described as follows: Commencing at the northeast corner of said Lot 6; thence South 0 degrees 31 minutes 30 seconds East 32.45 feet along the east line of said Lot 6; thence South 50 degrees 18 minutes 46 seconds West 8.41 feet; thence North 90 degrees 00 minutes 00 seconds West 64.67 feet; thence South 75 degrees 02 minutes 16 seconds West 82.82 feet; thence North 90 degrees 00 minutes 00 seconds West 59.19 feet; thence South 76 degrees 50 minutes 26 seconds West 76.08 feet, thence South 0 degrees 00 minutes 00 seconds West 35.33 feet, thence South 90 degrees 00 minutes 00 seconds East 10.13 feet; thence South 0 degrees 00 minutes 00 seconds West 20.00 feet; thence North 90 degrees 00 minutes 00 seconds West 10.00 feet to the point of beginning of this description: thence South 11 degrees 38 minutes 53 seconds West 99.06 feet; thence North 0 degrees 00 minutes 00 seconds East 97.02 feet; thence South 90 degrees 00 minutes 00 seconds East 20.00 feet to the point of beginning and containing 970 square feet, more or less.

Subject to the right-of-ways, easements, and restrictions of record.

Legal description – Access/Utility Easement

A part of Lots 4, 5, and 6 in River Oaks Subdivision, the plat of which is recorded in Plat Book 51, page 58, Franklin County, Ohio, described as follows: Commencing at the northeast corner of said Lot 6; thence South 0 degrees 31 minutes 30 seconds East 32.45 feet along the east line of said Lot 6; thence South 50 degrees 18 minutes 46 seconds West 8.41 feet; thence North 90 degrees 00 minutes 00 seconds West 64.67 feet; thence South 75 degrees 02 minutes 16 seconds West 82.82 feet; thence North 90 degrees 00 minutes 00 seconds West 59.19 feet; thence South 76 degrees 50 minutes 26 seconds West 76.08 feet; thence South 0 degrees 00 minutes 00 seconds West 35.33 feet; thence North 90 degrees 00 minutes 00 seconds West 19.87 feet to the point of beginning of this description: thence South 0 degrees 00 minutes 00 seconds West 117.02 feet; thence South 19 degrees 00 minutes 03 seconds West 51.49 feet; thence South 0 degrees 00 minutes 00 seconds West 52.83 feet; thence South 19 degrees 00 minutes 03 seconds East 51.49 feet; thence South 0 degrees 00 minutes 00 seconds West 72.14 feet to the south line of said Lot 4; thence North 89 degrees 23 minutes 01 second West 12.00 feet along said south line; thence North 0 degrees 00 minutes 00 seconds East 70.00 feet; thence North 19 degrees 00 minutes 03 seconds West 51.49 feet; thence North 0 degrees 00 minutes 00 seconds East 56.84 feet; thence North 19 degrees 00 minutes 03 seconds East 51.49 feet; thence North 0 degrees 00 minutes 00 seconds West 115.01 feet; thence South 90 degrees 00 minutes 00 seconds East 12.00 feet to the point of beginning and containing 4,139 square feet, more or less.

Subject to the right-of-ways, easements, and restrictions of record.

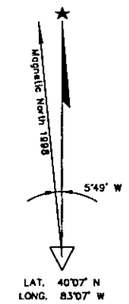

Notes:

1) Tower Foundation Elevation: 803.00 AMSL
2) Top of Tower Elevation: 904 AMSL
   Top of Lightning Rod Elevation: 910 AMSL
3) According to the reading taken with a GPS receiver and checked with the United States Department of the Interior Geological Survey Map, Northwest Columbus, Ohio the tower center is located North 40 degrees 07 minutes 04 seconds Latitude and West 83 degrees 06 minutes 39 seconds Longitude.

FIRST GROUP ENGINEERING INC.
CONSULTING ENGINEERS
5714 W. 74TH STREET, INDIANAPOLIS, INDIANA
PH. (317) 290-9549 FAX (317) 290-9560

SCIOTO PARK
7377 RIVERSIDE DRIVE
COLUMBUS, OHIO 43016
FRANKLIN COUNTY

Sprint PCS
2 EASTON OVAL, SUITE 400
COLUMBUS, OHIO 43219
CONSTRUCTION DRAWING FOR
SITE NO. CB03XC026D

NO.	DATE	REVISIONS	BY	CHK	APP'D

DATE 3/10/99 CHECKED BY. W.B.B. DRAWN BY. P.M.

Sprint PCS

AS-BUILT DRAWING

SITE NUMBER	DRAWING NUMBER
CB03XC026D	AB1

Clibpdf - www.fastio.com

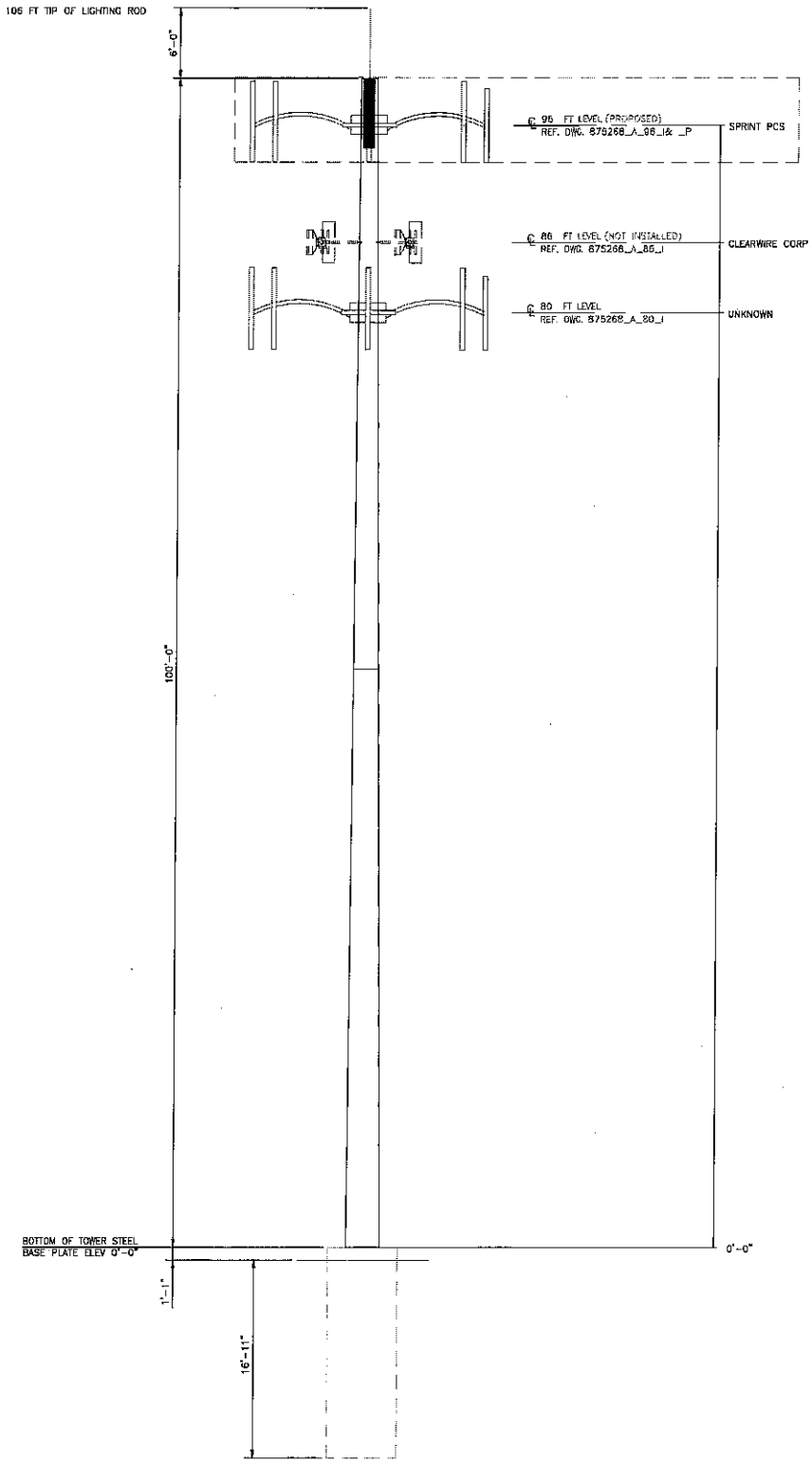

BUSINESS UNIT: 875268 TOWER ID: A

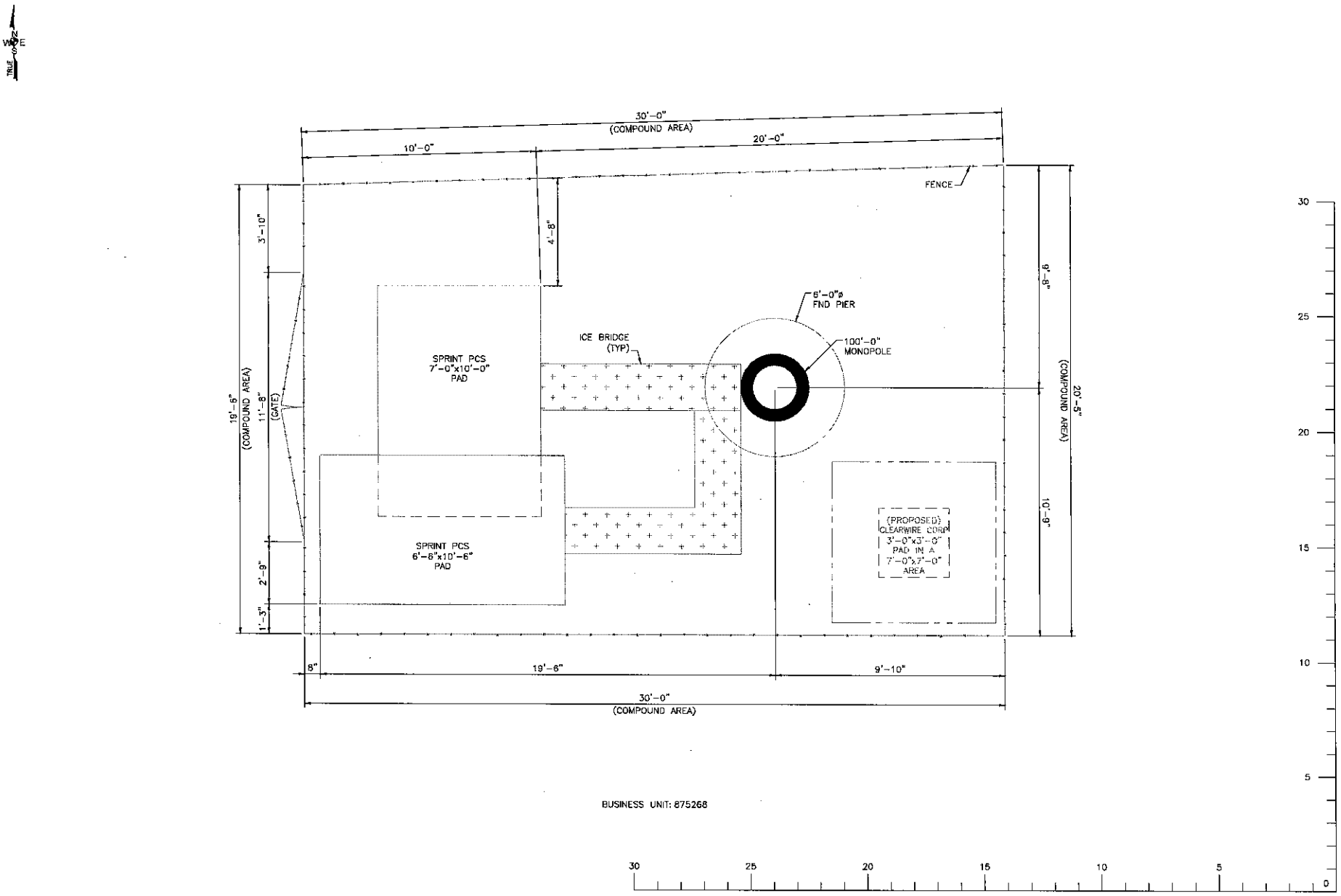

BUSINESS UNIT: 875268