City of Dublin

14-014.0-CIP

Proposal
And
Contract Documents
for

JOHN SHIELDS PARKWAY PHASE 1

14-014.0-CIP

City of Dublin

BID SUBMITTAL AND CONTRACT DOCUMENTS FOR THE

CITY OF DUBLIN

JOHN SHIELDS PARKWAY - PHASE 1

TABLE OF CONTENTS

I. BIDDING REQUIREMENTS 1

A. INVITATION FOR BIDS 2
B. INSTRUCTIONS TO BIDDERS 3
C. REQUEST FOR INFORMATION (PRE-BID) 17
D. BID COVERSHEET 18
E. PREVAILING WAGE RATES DISK 20

II. BIDDING FORMS 21

A. PROPOSAL 22
B. BID SCHEDULE ..... 27-1 to 27-7
C. COMBINED BID/PERFORMANCE/PAYMENT BOND 28
D. ALTERNATE BID SECURITY FORM 31
E. PERFORMANCE AND PAYMENT BOND 32
F. AFFIDAVIT OF AUTHORITY 34
G. COMBINED DELINQUENT PERSONAL PROPERTY TAX & NONCOLLUSION AFFIDAVIT 35
H. W-9 FORM 36
I. LIST OF SUBCONTRACTORS 37
J. CONTRACTOR QUALIFICATION STATEMENT 39

III. ADDITIONAL CONTRACT DOCUMENTS 54

A. CITY/CONTRACTOR AGREEMENT 55
B. CITY OF DUBLIN GENERAL CONDITIONS DIVISION 100 70
C. SUPPLEMENTAL GENERAL CONDITIONS 71
D. SUPPLEMENTAL SPECIFICATIONS 72
E. GEOTECHNICAL SPECIFICATIONS 73
F. STANDARD DRAWINGS 74
G. SCOPE OF WORK 75

IV. OWNER COMPLETED FORMS 76

A. OWNER EXECUTION CHECKLIST 77
B. NOTICE OF AWARD TO BIDDER 78
C. NOTICE OF AWARD TO SURETY AND SURETY'S AGENT 79
D. NOTICE TO PROCEED 80
E. NOTICE OF COMMENCEMENT OF PUBLIC IMPROVEMENT (O.R.C. §1311.252).....81
F. PREVAILING WAGE BID TABULATION SHEET 82

V. ADDITIONAL PROJECT FORMS 83

A. PAYROLL INFORMATION 84
B. FINAL AFFIDAVIT OF COMPLIANCE WITH PREVAILING WAGES 86
C. CONTRACTOR'S LIEN WAIVER AND RELEASE AGREEMENT....87

VI. PLANS/DRAWINGS 88

I. BIDDING REQUIREMENTS

A. INVITATION FOR BIDS

The CITY OF DUBLIN, Ohio will receive sealed bids for the materials and labor necessary for the construction of the JOHN SHIELDS PARKWAY - PHASE 1 PROJECT. Bids shall be received by CITY OF DUBLIN at 5800 Shier-Rings Road, Dublin, Ohio 43016 until 11:00 A.M. local time on June 17, 2014, at which time all bids will be opened and read aloud.

The CITY OF DUBLIN may choose to not award the bid—and bidders shall hold bids open—until sixty days after the bid opening. The work for which bids are invited consists of: Construction of approximately 400 feet of new roadway with granite curb, brick sidewalk, parking areas with permeable brick pavers, granite edged planting beds and conduit to accommodate future street lighting, landscaping, storm sewer and water main and construction of approximately 400 feet of AEP duct bank.. The cost estimate for the Project is $1,350,000.00.

Copies of the Contract Documents are on file at 5800 Shier-Rings Road, Dublin, Ohio 43016, where they are available for inspection by prospective bidders. Paper copies of the Contract Documents are available for a NONREFUNDABLE charge of $75.00 during business hours at the same address. Please make any check payable to the CITY OF DUBLIN.

Each bidder is required to furnish with its proposal a Bid Guaranty in accordance with Section 153.54 of the Ohio Revised Code. Bid security furnished in Bond form shall be issued by a surety company or corporation licensed in the State of Ohio to provide said surety.

Each proposal must contain the full name of the party or parties submitting the proposal and all persons interested therein. Each bidder must submit evidence of its experience on projects of similar size and complexity. The owner intends and requires that this project be completed as follows: **substantially complete by November 21, 2014 and total completion April 24, 2015**.

All contractors and subcontractors involved with the project will to the extent practicable use Ohio products, materials, services and labor in the implementation of their project. Payment of Prevailing Wages IS required for this Project.

The CITY OF DUBLIN reserves the right to accept or reject any or all bids, to waive any informalities or irregularities in the bidding process and to enter into a contract with the bidder whom, in its opinion, offers the lowest and best bid.

Each bidder must ensure that all employees and applicants for employment are not discriminated against based on race, color, religion, sex, or national origin.

By order of the Council of the CITY OF DUBLIN, OHIO. Ordinance number N/A.

Publish dates: June 3, 2014
June 10, 2014

B. INSTRUCTIONS TO BIDDERS

1. PRELIMINARY MATTERS

   a. The Project owner is the CITY OF DUBLIN, OHIO. The Owner's Representative is Paul A. Hammersmith P.E., Director of Engineering / City Engineer. You may direct questions or request for additional information to Mandy Bishop, P.E. at Telephone: 614-859-1617; Email: mbishop@gpdgroup.com.

   b. In connection with the Legal Notice, the CITY OF DUBLIN (hereinafter called the "City"), issues this Request for Bids for all labor, material, and services necessary for constructing the JOHN SHIELDS PARKWAY - PHASE 1 PROJECT (the "Project"), as more fully described in the Contract Documents.

   c. Definitions. The word uses here shall have the following meanings:

      i. "City" or "Owner" shall mean the CITY OF DUBLIN, OHIO.

      ii. "Bidder" or "Contractor" shall all mean an entity or person that submits a bid for the Project and ultimately the entity or person awarded the contract as applicable.

      iii. "Contract Documents" shall mean the documents included with this bid solicitation and listed as Contract Documents in the City/Contractor Agreement.

      iv. "O.R.C." shall mean the OHIO REVISED CODE.

   d. The Project consists of the following contract(s) for the work on the Project:

      i. General Contract

   e. Estimate of Cost [O.R.C. 153.12(A)].

      i. The total estimated construction cost for the base bid Work for the Project for which the City is soliciting bids at this time is $1,350,000.00.

2. CONTRACTOR QUALIFICATIONS, REGISTERED CONTRACTORS, INCOME TAX, PERMITTING

   a. A Bidder may be a person, private entity, or any combination of such entities supported by a letter of intent to enter into an agreement or under an existing agreement in association in the form of a joint venture or other consortium. In the case of a joint venture or other consortium:

      i. All members shall be jointly and severally liable for the execution of the Contract, and

      ii. The association shall nominate a representative who shall have the authority to conduct all business for and on behalf of any and all the members of the joint venture or the consortium during the bidding process and, in the event the joint venture or consortium is awarded the Contract, during Contract execution.

   b. Threshold Qualifications. Every Contractor, before entering a contract with the City, must demonstrate the following:

i. Registered Contractors. Any person or company (including subcontractors) intending to do work under these Contract Documents shall be required to meet the CITY OF DUBLIN laws for Contractor Registration, if any, contained in the Codified Ordinances of the CITY OF DUBLIN as applicable to the particular classification of work to be performed.

ii. Licensed Contractors. Bidders and subcontractors for work requiring licenses under the O.R.C. shall submit evidence of such licensing in accordance with O.R.C. Chapter 4740.

iii. Foreign Corporations. Business entities formed outside of the state of Ohio shall present proof of registry with the Ohio Secretary of State and demonstrate the existence of an Ohio statutory agent.

c. Income Taxes. All persons or entities performing work under these Contract Documents shall comply with the requirements set forth in the Codified Ordinances of the CITY OF DUBLIN.

d. Permits and Regulations - Unless otherwise previously or subsequently specified, the Contractor shall procure and pay for all permits, licenses, inspections and approvals necessary for the execution of his contract. The City will obtain the required building permit for permanent structure.

i. The Contractor shall comply with all laws, ordinances, rules, orders and regulations relating to the performance of the work required to complete the Project.

ii. The Contractor's attention is directed to the "Safety and Health Regulations for Construction" of the Occupational Safety and Health Administration, U.S. Department of Labor and to its responsibilities thereunder.

3. GENERAL INSTRUCTIONS

a. City expects the Bidder to examine all instructions, forms, terms, and specifications in the Request for Bids. Each Bidder is solely responsible for conducting its own due diligence and investigation in support of the preparation of Bids, negotiation of agreements, and the subsequent delivery of all services it will provide. Bidder’s failure to furnish all information or documentation required by the Bidding Documents may result in the City rejecting the Bid.

b. Public Information. The City considers all information, documentation and other materials requested to be submitted in response to this solicitation to be a non-confidential and/or non-proprietary nature and therefore subject to public disclosure under the Ohio Public Records Laws except as specifically exempted by those laws. [O.R.C. Chapter 149].

c. Bidder should carefully read the information contained herein. It is the Bidder’s responsibility to submit a complete response to all requirements and questions. Any information submitted by Bidders shall become the property of the City and submitted at the Bidder’s sole expense. The City shall not pay any stipend for any submissions related

to the bidding process. The City will not provide compensation to Bidders for any expenses incurred for Bid preparation or for any presentations made.

d. The City may disqualify bids that are qualified with conditional clauses, or alterations, or items not called for in the bid documents, or irregularities and deviations from the requirements of the Contract Documents.

e. The City makes no guarantee that an award will be made because of this bid, and reserves the right to accept or reject any or all bids, waive any formalities or minor technical inconsistencies, or delete any item/requirements from this bid or resulting contract when deemed to be in the City's best interest.

4. INTERPRETATION

a. If a Bidder contemplating submitting a Bid for the proposed Project is in doubt as to the true meaning of any part of the Contract Documents, it **may submit a written request for an interpretation thereof to Mandy Bishop, P.E., in writing on the form included with the Contract Documents. Inquiries shall be faxed to 614-410-4699 to the attention of Mandy Bishop, P.E..** The City will make any interpretation of the proposed documents by Addendum only, duly signed by the City, and a copy of such Addendum will be mailed or delivered to each Bidder receiving a set of Contract Documents and each plan room where the City maintains the Contract Documents. The City will not be responsible for any other explanation or interpretation of the proposed documents.

b. In interpreting the Contract Documents, the Bidder shall interpret words describing materials that have a well-known technical or trade meaning, unless otherwise specifically defined in the Contract Documents, in accordance with the well-known meaning recognized by the trade.

5. CONTRACT DOCUMENTS

a. The Contract Documents consist of the documents listed in the City/Contractor Agreement and included with these Bid Submittal and Contract Documents for the Project. Bidders shall use complete sets of the Contract Documents in preparing Bids. The City assumes no responsibility for errors or misinterpretations resulting from the use of incomplete sets of Contract Documents. The City, in making the Contract Documents available on the above terms, does so only for obtaining Bids on the Work and does not confer a license or grant for any other use.

b. The Construction and Material Specifications for this Project shall be the CITY OF DUBLIN Division 100 and the current version of the CMS, excluding 's Division 100—all of which are incorporated into and made part of the Contract Documents for this Project.

6. DOCUMENTS TO SUBMIT WITH BID

a. The Bidder shall submit the following completed forms with its response to this Request for Bids:

i. Bid Form

ii. Bid Guaranty and Contract Bond

iii. Affidavit of Authority (if applicable)

iv. Personal Property Tax Affidavit

v. Bidder's Qualification Statement

vi. Insurance Certificate

vii. Noncollusion affidavit

viii. State of Ohio Bureau of Workers' Compensation Certificate

ix. Proposed Supervisory Personnel List

x. Proposed Subcontractor List

xi. Bidder's and Subcontractors' Certificate(s) of licensure, if applicable

b. In addition to the foregoing requirements, Bids submitted by a joint venture or other consortium shall include a copy of the joint venture/consortium agreement entered into by all members. Alternatively, a binding letter of intent or similar irrevocable instrument to execute a joint venture/consortium agreement in the event of a successful Bid shall be signed by all members and submitted with the Bid, together with a copy of the proposed joint venture/consortium agreement.

c. Each Bidder shall submit the following number of copies of its Bid to the City: 3 and one additional copy in electronic PDF form. The PDF form must exactly match the hard copy and must be provided within 24 hours after the Bid opening. The Bid Form shall be signed with the name typed or printed below the signature. A Bid shall not be submitted by facsimile transmission. A Bidder shall sign its Bid in the form required under Ohio law to bind the Bidder's particular type of business entity to a contract.

d. Each Bid shall be enclosed and delivered in a sealed opaque envelope with the Bidder's name and the title of the Project printed in the upper left hand corner and addressed as follows: **ATTN: Paul A. Hammersmith P.E., Director of Engineering / City Engineer, 5800 Shier-Rings Road, Dublin, Ohio 43016.** The Bidder shall be responsible for delivering its Bid to this office and address for the Bid opening before the deadline set forth in the Legal Notice—as extended by any addenda. The City will not open Bids that arrive after the deadline regardless of how the Bidder delivers the Bid.

e. After the City opens the Bids, it may require the Bidders to submit additional financial information. The City shall keep additional financial information it receives pursuant to a request under this paragraph confidential to the extent possible, except under proper order of a court. The additional financial information should not be a public record under section 149.43 of the Revised Code. (*See* O.R.C. 9.312).

7. CLARIFICATION OF BIDS

a. To assist in the examination, evaluation, and comparison of the Bids and the qualifications of the Bidders, the City may ask any Bidder for a clarification of its Bid. Any clarification submitted by a Bidder that is not in response to a request by the City shall not be considered. The City's request for clarification and the response shall be in writing. No change in the prices or substance of the Bid shall be sought, offered, or permitted, except

to confirm the correction of arithmetic errors discovered by the City in the evaluation of the Bids.

8. BONDS

a. Bid, Payment, and Performance Security. Each bidder shall submit one of the statutorily required forms of bid security as set forth in O.R.C. Section 153.54 and the winning bidder must also submit Payment and Performance bonds as required by the O.R.C. and on the forms included with the Contract Documents. There are two ways to meet these requirements:

   i. OPTION #1: Submit the Combined Bid/Performance/Payment Bond on the form included with the Contract Documents along with the Bid; or,

   ii. OPTION #2: Submit a certified check, cashier's check, or letter of credit pursuant to Chapter 1305 of the Revised Code, conditioned to provide that if the bid is accepted, the bidder, after the awarding or the recommendation for the award of the contract, whichever the contracting authority designates, will enter into a proper contract in accordance with the bid, plans, details, specifications, and bills of material. Any letter of credit shall be revocable only at the option of the City. The amount of the certified check, cashier's check, or letter of credit shall be equal to ten per cent of the bid. Any of the foregoing instruments shall be submitted with the CITY OF DUBLIN listed as the payee or beneficiary. If the Bidder chooses option ii and is awarded the Contract, the Bidder shall then submit a Payment and Performance Bond using the form included with the Contract Documents.

b. With any Bond required here, the Bidder shall submit or ensure:

   i. *Ohio Department of Insurance Certificate*. Proof that the bond is issued by a surety company ("Surety") authorized by the Ohio Department of Insurance to transact business in the State of Ohio and acceptable to the City in the form of a certificate.

   ii. *A Financial Statement*. Proof that the bond is issued by a Surety capable of demonstrating a record of competent underwriting, efficient management, adequate reserves, and sound investments. These criteria will be deemed to be met if the Surety currently has an A.M. Best Company Policyholders rating of "A-" better and has or exceeds the Best Financial Size Category of Class VI. Other Sureties may be acceptable to the City, in its sole discretion.

   iii. *Proper signatures, credentials, and Power of Attorney*. The bond shall be signed by an authorized agent of an acceptable Surety and by the Bidder; and, include credentials showing the Power of Attorney of the agent.

   iv. The name, address, and telephone and fax numbers of the Surety and the Surety's Agent should be typed or printed on each bond.

9. EXECUTION OF CONTRACT

   a. Within 10 days after award of the Contract, the successful Bidder shall execute and deliver to the City an original of the City/Contractor Agreement, based upon the City's form. Such contract shall include the terms required by Ohio law and documents required by the Instructions to Bidders and Contract Documents for the Project. The successful Bidder shall have no property interest or rights under the City/Contractor Agreement until the Agreement is properly executed by the City.

10. STATE SALES AND USE TAXES

   a. The City is a political subdivision of the State of Ohio and is exempt from taxation under the Ohio Sales Tax and Use Tax Laws. Building materials that the successful Bidder purchases for incorporation into the Project will be exempt from state sales and use taxes if the successful Bidder provides a properly completed Ohio Department of Taxation Demolition Contract Exemption Certificate to the vendors or suppliers when acquiring the materials. The City will execute properly completed certificates on request.

11. DATE FOR SUBSTANTIAL COMPLETION/LIQUIDATED DAMAGES

   a. Date for Substantial Completion. Each successful Bidder shall have its Work on the Project Substantially Complete (as Substantial Completion is defined in the Contract Documents) as follows: **substantially complete by November 21, 2014 and total completion April 24, 2015**. The Contract Time shall run from the date of the Notice to Proceed or if there is no Notice to Proceed from the Effective Date of the City/Contractor Agreement. The Date for Substantial Completion and the Contract Time may be extended only as set forth in the Contract Documents. By submitting its Bid, each Bidder agrees that the period for performing its Work is reasonable.

   b. Liquidated Damages. If the successful Bidder does not have its Work Substantially Complete by its Date for Substantial Completion, the successful Bidder shall pay the City and the City may set off from amounts otherwise due the successful Bidder any Liquidated Damages. The daily amounts of Liquidated Damages are set forth in the Contract Documents. The total amounts of Liquidated Damages will be calculated based on the total number of calendar days beyond the Date for Substantial Completion that the Bidder's Work is not Substantially Complete. In addition to such Liquidated Damages, the Bidder shall indemnify, defend, and hold the City and its employees and agents harmless from any and all claims, whether or not such claims are proven, and from all costs and expenses incurred as a result of such claims, including but not limited to attorneys' and experts' fees and expenses, and additional inspection costs that arise out of or are related to the Bidder's failure to Substantially Complete its Work by its Date for Substantial Completion. The Bidder's obligations under this Section are joint and several.

12. MODIFICATION/WITHDRAWAL OF BIDS

   a. Modification. A Bidder may modify its Bid by written communication to the City addressed to the City's Representative at any time before the scheduled closing time for receipt of Bids, provided such written communication is received by City's Representative before the Bid deadline. The written communication shall not reveal the Bid price, but should provide the addition or subtraction or other modification so that the final prices

or terms will not be known to the City until the sealed Bid is opened. If the Bidder's written instructions with the change in Bid reveal the Bid amount in any way before the Bid opening, the Bid may be rejected as non-responsive.

b. Withdrawal. Bids may be withdrawn with permission of the City or in strict accordance with O.R.C. Section 9.31 which generally commands that Bidders may withdraw their bids from consideration if the price of the bid was substantially lower than the other bids, providing the bid was submitted in good faith, and the reason for the price bid being substantially lower was a clerical mistake as opposed to a judgment mistake, and was actually due to an unintentional and substantial arithmetic error or an unintentional omission of a substantial quantity of work, labor, or material made directly in the compilation of the bid. Notice of a claim of right to withdraw such bid must be made in writing filed with the City within two business days after the conclusion of the bid opening procedure.

13. PREVAILING WAGES

a. This Project is horizontal construction with an estimated cost of **$1,350,000.00**, and the **Bidder IS required to comply with all applicable Ohio Prevailing Wage requirements and labor laws for this Project.**

b. If Prevailing Wage applies to this Project, the determination of the prevailing rates of wages of mechanics and laborers in accordance with section 4115.05 of the Revised Code for the class of work called for by the Project, in the locality where the work is to be performed, shall be attached to and made part of the Contract Documents.

c. If Prevailing Wage applies to this Project, the Contractor must pay at least the wage rates subsequently listed in the Wage determinations. The Contractor must submit properly executed copies of the Contractor's and subcontractor's payrolls to the City's Prevailing Wage Coordinator in accordance with the requirements of Section 4115.071 of the O.R.C.. Payroll records shall be kept current as failure to do so will delay the Owner's approval for payment of any pending estimates.

14. ALTERNATES

a. The City may request bids on alternates. If the City requests bids on alternates, the Bidder should include the cost of the alternates requested on its Bid Form.

b. At the time of awarding the contract, the City will select or reject alternates as it determines is in its best interest. A Bidder's failure to include in its Bid Form the cost of an alternate selected by the City and applicable to the Bidder's work may render the bid non-responsive and be grounds for the rejection of the bid. Otherwise, the failure to include the cost of an alternate will not be deemed material.

c. The Bidder acknowledges that although there is an estimate for the cost of the Project, the market conditions may and frequently do result in the estimate being different from the sum of the bids received, either higher or lower. The Bidder understands that the City may include alternates, which may include deduct alternates as well as add alternates, to give it flexibility to build the Project with the funds available. The Bidder further understands and acknowledges that use of add and deduct alternates is a long held

customary practice in the construction industry in the State of Ohio. The Bidder also acknowledges that the City will not make a decision about the alternates on which to base the award of contracts until the bids are received, and the City can compare its available funds with the base bids and the cost or savings from selecting different alternates. The Bidder understands that the award to the Bidder submitting the lowest and best bid will be based on the lowest and best base bid plus selected alternates, and may result in an award to a Bidder other than the Bidder that submitted the lowest base bid. The bidder also acknowledges that its, and other bidders', bids may become responsive or non-responsive based on whether the bidders bid and are qualified for all base work and alternates; and, the City's selection of alternates. The City will evaluate bids to determine the lowest and best bid after it selects the alternates.

d. If, during the progress of the Work, the City desires to reinstate any alternate not included in the Contract, the City reserves the right to reinstate the alternate at the price bid by the Contractor if such action is taken in sufficient time so as not to delay the progress of the work or cause the Contractor additional expense.

15. UNIT PRICES

a. Where unit prices are requested in the Bid Form, the Bidder should quote a unit price. Unless otherwise expressly provided in the Bid Documents, such unit prices shall include all labor, materials, and services necessary for the timely and proper installation of the item for which the unit prices are requested. The unit prices quoted in the bid shall be the basis for any Change Orders entered into under the City/Contractor Agreement, unless the Design Professional determines that the use of such unit prices will cause substantial inequity to either the Contractor or the City.

b. The estimated quantities shown herein are approximate only and the City assumes no responsibility for the accuracy of the estimates. Bidders are cautioned to make their own investigations and determinations of the conditions under which the work will be performed and to base their bids accordingly.

16. ADDENDA

a. The City reserves the right to issue Addenda changing, altering, or supplementing the Contract Documents before the time set for receiving bids. The City will issue the Addenda to clarify bidders' questions and/or to change, alter, or supplement the Contract Documents.

b. Any explanation, interpretation, correction, or modification of the Contract Documents will be issued in writing in the form of an Addendum, which shall be the only means considered binding. Any explanations, interpretations, or other representations made by any other means shall not be legally binding. All Addenda shall become a part of the Contract Documents.

c. Bidders shall submit written questions to the City in sufficient time in advance of the bid opening to allow sufficient time for the City to respond. All Addenda will be issued, except as hereafter provided, and mailed or otherwise furnished to persons who have obtained Contract Documents for the Project, before the published time for the opening of bids.

d. Copies of each Addendum will be sent only to the Bidders to whom Contract Documents have been issued and to Plan Rooms where copies of the Contract Documents are maintained. Receipt of Addenda shall be indicated by Bidders in the space provided on the Bid Form. Bidders are responsible for acquiring issued Addenda in time to incorporate them into their bid. Bidders should contact the City before the bid opening to verify the number of Addenda issued.

e. Each Bidder shall carefully read and review the Contract Documents and immediately bring to the attention of the City any error, omission, inconsistency, or ambiguity therein.

f. If a Bidder fails to indicate receipt of all Addenda through the last Addendum issued by the Design Professional on its Bid Form, the bid of such Bidder will be deemed to be responsive only if:

   i. The bid received clearly indicates that the Bidder received the Addendum, such as where the Addendum added another item to be bid upon and the Bidder submitted a bid on that item; or

   ii. The Addendum involves only a matter of form or is one that has either no effect or has merely a trivial or negligible effect on price, quantity, quality, or delivery of the item bid upon.

17. PREFERENCE FOR PUBLIC IMPROVEMENT CONTRACTS (As Selected)

a. [X] With respect to the award of this Contract, the City shall give preference to a contractor having its principal place of business in Ohio over a contractor having its principal place of business in a state that provides a preference in favor of contractors of that state for the same type of work. Where a preference is provided by another state for contractors of that state, a contractor having its principal place of business in Ohio is to be granted by the City the same preference over them in the same manner and on the same basis and to the same extent as the preference is granted in letting contracts for the same type of work by the other state. If one party to a joint venture is a contractor having its principal place of business in Ohio, the joint venture shall be considered as having its principal place of business in Ohio.

b. [ ] With respect to the award of this Contract, the City shall not give preference to a contractor having its principal place of business in Ohio over other contractors.

18. METHOD OF AWARD

a. In evaluating Bids, the City may conduct such investigations as are deemed necessary to establish the qualifications and financial ability of the Bidder and its subcontractors and suppliers. The Bidder authorizes the City and its representatives to contact the owners, design professionals, and others having knowledge (collectively "Contacts") on projects on which the Bidder has worked and authorizes and requests such Contacts to provide the City with a candid evaluation of the Bidder's performance. By submitting its Bid, the Bidder agrees that if it or any person, directly or indirectly, on its behalf or for its benefit brings an action against any of such Contacts or the employees of any of them as a result of or related to such candid evaluation, the Bidder will indemnify and hold such Contacts and the employees of any of them from any claims whether or not proven that are part of or are related to such action and from all legal fees and expenses incurred by any of

them arising out of or related to such legal action. This obligation is expressly intended for the benefit of such Contacts and the employees of each of them.

b. All Bids shall remain open for acceptance for 60 days following the day of the Bid opening, but the City may, in its sole discretion, release any Bid and return the Bid Guaranty before that date.

c. The City reserves the right to reject any, part of any, or all Bids and to waive any informalities and irregularities. The Bidder expressly acknowledges this right of the City to reject any or all Bids or to reject any incomplete or irregular Bid. The City will award a single contract for each of the Bid packages listed above, unless it determines to reject one or more Bid packages. Bidders must furnish all information requested. Failure to do so may result in disqualification of the Bid.

d. Determination of the Bidder Submitting the Lowest and Best Bid. Subject to the right of the City to reject any or all Bids, the City will award the Contract for the Work to the Bidder submitting the lowest and best Bid, taking into consideration accepted alternates.

    i. Buy Ohio/American and Ohio Contractor Bid Preference. If selected above, the City shall apply a domestic Ohio bid preference as outlined below.

        1. Bids will first be evaluated to determine that a bidder's offering is for a domestic source end product as defined in 41 C.F.R. section 1-6.101(D). Information furnished by the Bidder in its Bid shall be relied upon in making this determination. Any Bidder's offering that does not offer a domestic source end product shall be rejected, except where the City determines that certain articles, materials and supplies are not mined, produced, or manufactured in the United States in sufficient and reasonably available commercial quantities and of a satisfactory quality.

            a. Following the determination as to domestic source end products, remaining bids and proposals shall be evaluated as set forth below, so as to give preference to Ohio bids or bidders who are located in a border state, provided that the border state imposes no greater restrictions than contained in this rule.

        2. Buy Ohio Act compliance

            a. Where the preliminary analysis of bids identifies the apparent low bid as an Ohio bid or a bid from a border state, the City shall proceed with its standard contract award practices and procedures as set forth in the Instructions to Bidders.

            b. Where the preliminary analysis identifies the apparent low bid as one other than an Ohio bid or bid from a border state, the City shall consider the following factors:

                i. Whether the goods or services can be procured in-state in sufficient and reasonably available quantities and of a satisfactory quality;

ii. Whether an Ohio bid has been submitted;

iii. Whether the lowest Ohio bid, if any, offers a price to the City deemed to be an excessive price (defined as a price that exceeds by more than five per cent the lowest non-Ohio bid submitted);

iv. Whether the lowest Ohio bid, if any, offers a disproportionately inferior product or service.

c. Where the City determines that selection of the lowest Ohio bid, if any, will not result in an excessive price or disproportionately inferior product or service, the City shall include that Bidder in its lowest and best analysis.

d. Where the City otherwise determines it is advantageous to propose the award of a contract to other than an Ohio bidder or bidder from a border state, the City shall include that Bidder in its lowest and best analysis.

ii. In addition to the forgoing, City may consider the following criteria in determining the lowest and best bidder; and, in its discretion, may consider and give such weight to these criteria as it deems appropriate:

1. Past Contract Performance

a. Whether Bidder has failed to perform a contract within the last five years from the date of Bid submission based on all information including fully settled disputes or litigation. A fully settled dispute or litigation is one that has been resolved in accordance with the dispute resolution mechanism under the respective contract, and where all appeal instances available to the Bidder have been exhausted.

b. Whether Bidder has failed to sign a contract after submitting a bid security in the past five years.

c. All pending litigation shall in total not represent more than ten percent (10%) of the Bidder's net worth and shall be treated as resolved against the Bidder.

d. Bidder's history of making claims against others or having claims made against it; and, if the Bidder's management operates or has operated another construction company, the work history of that company in determining whether the Bidder submitted the lowest and best Bid.

2. Financial Ability

a. The Bidder's financial ability to complete the Contract successfully and on time without resort to its Surety.

b. Submission of audited financial statements including balance sheets, income statements, and cash flow statements, or other financial statements acceptable to the City, for the last three years to demonstrate the current soundness of the Bidder's financial position and its prospective long term profitability.

   i. The Bidder's average coefficient of Current ratio (Current Assets/Current Liabilities) compared to 1. The greater, the better.

   ii. The Bidder's average coefficient of Debt ratio (Total Debt/Total Assets) compared to 1. The lesser, the better.

3. Experience

   a. Whether the Bidder has experience under contracts in the role required by this Contract for at least the last five years before the Bid submission deadline, and with activity in at least nine months each year.

   b. Whether the Bidder has participated as in the role required by this Contract in at least two contracts within the last five years, each with a value of at least 85% of the stated estimate for this Project, that have been successfully and substantially completed and that are similar to the proposed Works. Similarity shall be based on the physical size, complexity, methods, technology or other characteristics as described in the Contract Documents.

   c. For the above or other contracts executed during the period stipulated in above, whether the Bidder has experience in the following key activities: ODOT Pre-Qualification for horizonal work listed in scope of project and Critical Path Method Scheduling & Schedule Coordination with Program Management Consultant; brick paver walk; granite paver walk; concrete washout area; removal and resetting of headwall; detention outlet chamber; granite curb and details; permeable paver roadway, aggregate, and geogrid; brick paver driveway; survey coordinates for waterline; AEP duct bank; earthwork adjustment allowance; landscaping – planting soil, structural soil, trees, and plantings..

   d. Whether the Bidder has a record of consistent customer satisfaction and of consistent completion of projects, including projects that are comparable to or larger and more complex than the Project, on time and in accordance with the applicable Contract Documents.

   e. The Bidder's prior experience on other projects with the CITY OF DUBLIN and with other public owners, including the Bidder's demonstrated ability to complete its work on these projects in accordance with the Contract Documents and on time, and will

also consider its ability to work with the City as a willing, cooperative, and successful team member.

4. Whether the Bidder possesses or can obtain sufficient equipment and facilities to complete the Project.
5. The adequacy, in numbers and experience, of the Bidder's work force to complete the Contract successfully and on time.
6. The Bidder's compliance with federal, state, and local laws, rules, and regulations, including but not limited to the Occupational Safety and Health Act, Prevailing Wage laws, and Ethics laws.
7. The Bidder's participation in a drug-free workplace program acceptable to the City, and the Bidder's record for both resolved and unresolved findings of the Auditor of State for recovery as defined in Section 9.24 of the O.R.C..
8. The City's prior experience with the Bidder's surety.
9. The Bidder's interest in the Project as evidenced by its attendance at any pre-Bid meetings or conferences for Bidders.
10. Depending upon the type of the work, other essential factors, as the City may determine and as are included in the Specifications.
11. The foregoing information with respect to each of the Subcontractors and Suppliers that the Bidder intends to use on the Project.

e. With its Bid, the Bidder will complete and submit to the City a completed Contractor's Qualification Statement (using the form included in the Contract Documents), and thereafter will provide the City with such additional information as the City may request regarding the Bidder's qualifications.

f. The failure to submit requested information on a timely basis may result in the determination that the Bidder is not the lowest and best Bidder.

g. With its Bid, the Bidder shall submit a list of proposed subcontractors using the form included with the Contract Documents. Subcontract work shall not total more than **50%** of the Contractor's Contact with the City.

h. The City reserves the right to reject proposed Subcontractors before the Contract is awarded. The Bidder shall replace rejected subcontractors will subcontractors acceptable to the City with no change in the amount of the Bid submitted by the Bidder to City. After approval by the City of the list of proposed Subcontractors, Suppliers, and manufacturers submitted by the successful Bidder, the list shall not be changed unless written approval of the change is authorized by the City. The City reserves the right to reject Subcontractors after the Contract is awarded. In that instance, the City shall only be liable to the Contractor for the difference in Contract Price between the rejected subcontractor and the replacement subcontractor. The Contractor's markup on the replacement subcontractor shall be equal to or less than the markup on the rejected subcontractor contract.

i. With its Bid, the Bidder shall submit a list of supervisory personnel with which it intends to staff the Project indicating their respective roles on the Project. The City reserves the right to reject proposed personnel both before and after the Contract is awarded with no additional cost to the City. Once the personnel list is approved by the City, it shall not be changed without the written consent of the City.

j. No Bidder may withdraw its Bid within sixty (60) days after the date Bids are opened. The City reserves the right to waive any formalities or irregularities or to reject any or all Bids.

k. The City reserves the right to disqualify Bids, before or after opening, upon evidence of collusion with intent to defraud or other illegal practices on the part of the Bidder.

l. By submitting its Bid, the Bidder agrees that the City's determination of which Bidder is the lowest and best Bidder shall be final and conclusive, and that if the Bidder or any person on its behalf challenges such determination in any legal proceeding, the Bidder will indemnify and hold the City and its employees and agents harmless from any claims included or related to such legal proceeding, whether or not proven, and from legal fees and expenses incurred by the City, its employees, or agents that arise out of or are related to such challenge.

m. Award of Contract. The award and execution of the Contract, when required, will only be made pursuant to the legal process applicable to the City for awarding contracts of this nature.

END OF INSTRUCTIONS TO BIDDERS

C. REQUEST FOR INFORMATION (PRE-BID)

CITY OF DUBLIN
JOHN SHIELDS PARKWAY - PHASE 1

The person, firm, or corporation submitting a request for information shall be responsible for its prompt delivery and do so in a manner that will allow a sufficient period of time for the issuance and delivery of an Addendum before receipt of bids. The CITY OF DUBLIN will not be responsible for any other explanations of the Contract Documents made before the receipt of bids.

Please submit all pre-bid questions in writing by facsimile or electronic mail (Email) to: Mandy Bishop, P.E., 614-410-4699

Company:	Contact Name:
Email:	Phone:
Requested Information:	

D. BID COVERSHEET

BIDDERS SHALL ATTACH THIS FORM AS THE COVERSHEET TO THE BID. USE THE BOXES BELOW TO CHECK YOUR WORK. COMPLETING THIS FORM DOES NOT GUARANTEE THAT YOUR BID WILL BE RESPONSIVE OR SELECTED; BUT, SHOULD HELP TO OVERCOME THE MOST COMMON BIDDER MISTAKES. THE CITY OF DUBLIN, OHIO RESERVES THE RIGHT TO REJECT ANY AND ALL PROPOSALS AND TO WAIVE ANY INFORMALITIES OR IRREGULARITIES IN THE PROPOSALS.

1. Bidder's Company Name: _____

2. Total Bid (From Bid Form): $_____

BID PACKAGE

- ☐ Reviewed in detail?

PROPOSAL

- ☐ Acknowledged any addenda?
- ☐ Total bid amount completed in words and figures?
- ☐ Signed by a person with authority to bind your company?
- ☐ No changes made to form or conditions added?

BID SCHEDULE

- ☐ Completely filled in?

COMBINED BID/PERFORMANCE/PAYMENT BOND

- ☐ Your company name in the Principal blank?
- ☐ Surety name in the Surety blank?
- ☐ Dollar amount should be blank
- ☐ Signed as indicated?

COMBINED DELINQUENT PERSONAL PROPERTY TAX & NONCOLLUSION AFFIDAVIT

- ☐ Filled in?
- ☐ Signed?
- ☐ Notarized?

AFFIDAVIT OF AUTHORITY

- ☐ Needs completed if you are anything other than a sole proprietor
- ☐ Filled in?
- ☐ Signed?
- ☐ Notarized?

POWER OF ATTORNEY (OUT OF STATE CORPORATION)

- ☐ Must have if you are an out of state corporation

LIST OF SUBCONTRACTORS

- ☐ Completed?

LIST OF SUPERVISORY PERSONNEL

- ☐ Completed?

CONTRACTOR QUALIFICATION STATEMENT

- ☐ Completed?

INSURANCE CERTIFICATE

- ☐ Submitted?

WORKERS COMPENSATION COVERAGE

- ☐ Submitted?

W-9 FORM

- ☐ Submitted?

E. PREVAILING WAGE RATES DISK

II. BIDDING FORMS

A. PROPOSAL

CITY OF DUBLIN

JOHN SHIELDS PARKWAY - PHASE 1

_____ (the "Bidder") submits this Proposal having read and examined the contract documents, including but not limited to the Invitation to Bid.

Addenda Number	Date of Receipt
_____	_____
_____	_____
_____	_____

The Bidder proposes to perform all work for the Agreement for Construction in accordance with the contract documents for the following sum:

Total Bid (in figures): $ _____

Total Bid (in words): _____

_____

In the event of a discrepancy between the amount of the total bid as written in figures and in words, the amount written in words shall govern.

Unless otherwise specified in the Bid Document the amount of the total bid is based on the unit prices or lump sum set forth in the Bid Schedule attached hereto and incorporated herein.

The Bidder understands and agrees that all work to be performed under the Agreement for Construction shall be completed by the date or time required by the Contract Documents unless an extension of time is granted by the CITY OF DUBLIN.

Upon failure to have the work completed within the project time, the CITY OF DUBLIN, OHIO shall be entitled to retain or recover from the Bidder, as liquidated damages, and not as a penalty, the amounts set forth in the following table for each and every calendar day until completion. The right of the CITY OF DUBLIN, OHIO to recover liquidated damages shall not substitute for any recovery for additional costs in the event the Bidder fails to complete the Agreement for Construction according to the Contract Documents.

Liquidated Damages:

Contract Amount	Dollars per Day
$0-25,000	100.00
25,001-50,000	150.00

50,001-100,000	200.00
100,001-500,000	300.00
500,001-1,000,000	500.00
1,000,001-2,000,000	750.00
2,000,001-5,000,000	1,000.00
5,000,001-10,000,000	1,500.00
Over $10,000,001	2,000.00

REPRESENTATIONS OF THE BIDDER

The Bidder represents the following:

1. The Bidder has read and understands the Contract Documents and understands that it must comply with all requirements of the Contract Documents, regardless of whether the Bidder has actual knowledge of the requirements and regardless of any statement or omission made by the Bidder that might indicate a contrary intention.

2. The Bid is based upon the items specified by the Contract Documents.

3. The Bidder has visited the site, become familiar with local conditions, and has correlated personal observations about the requirements of the Contract Documents. The Bidder has no outstanding questions regarding the interpretation of the Contract Documents.

4. Within ten (10) business days from the date of receipt the Notice of Intent to Award, the Bidder understands that it must enter into and execute an agreement for CITY OF DUBLIN, JOHN SHIELDS PARKWAY - PHASE 1 PROJECT if awarded based on this proposal. If the Bidder does not execute an agreement for the Project for any reason, the Bidder and the Bidder's surety shall be liable to the CITY OF DUBLIN, OHIO as provided in O.R.C. Section 153.54.

5. Within ten (10) business days of the date of receipt of the Notice of Intent to Award, the Bidder understands that it must submit the following:

   a. Performance Bond. (If combined bid/performance/payment not submitted already).

   b. Copy of Additional Insured Endorsement.

6. The Bidder understands that it must furnish any other information requested by the CITY OF DUBLIN.

The Bidder hereby signs this Proposal on the ___ day of _____, 2014.

If Bidder is an individual, complete the following:

Signature: _____

Print Name: _____

Name of Business: _____

(if different from above)

Federal Identification Number: _____

Address: _____

_____

Telephone: ( ) _____

Fax: ( ) _____

If Bidder is a partnership, complete the following:

Name of Partnership: _____

By: _____

(Signature)

Print Name: _____

Federal Identification Number: _____

Address: _____

_____

Telephone: ( ) _____

Fax: ( ) _____

Names and Addresses of all general partners:

_____

_____

_____

If Bidder is a joint venture, complete the following:

Name of Joint Venture: _____

By: _____

(Signature)

Print Name: _____

Address: _____

_____

Telephone: ( ) _____

Fax: ( ) _____

Complete the following for each firm represented by the joint venture:

1. Name:_____

Federal Identification Number: _____

Address: _____

_____

Telephone: ( ) _____

Fax: ( ) _____

2. Name: _____

Federal Identification Number: _____

Address: _____

_____

Telephone: ( ) _____

Fax: ( ) _____

If Bidder is a corporation, complete the following:

Name of Corporation: _____

By: _____

(Signature)

Print Name: _____

Title: _____

Federal Identification Number: _____

Address: _____

_____

Telephone: ( ) _____

Fax: ( ) _____

State of Incorporation: _____

Names and addresses of Corporate Officers:

_____

_____

_____

If Bidder is an entity other than those described above, complete the following:

Name of Bidder:

By: _____

(Signature)

Print Name: _____

Title: _____

Federal Identification Number: _____

Address: _____

_____

Telephone: ( ) _____

Fax: ( ) _____

Type of Business Entity: _____

Names and addresses of all Principals:

_____

_____

_____

_____

_____

BID SCHEDULE

BIDDER agrees to perform all work described in the CONTRACT DOCUMENTS for the following unit prices:

John Shields Parkway - Phase 1

CITY OF DUBLIN

REF NO.	(1) ITEM	(2) DESCRIPTION	(3) QUANT.	(4) UNIT	(5) LABOR ($)	(6) MATERIAL ($)	(7) (5)+(6) TOTAL ($)	(8) (3) x (7) TOTAL EXTENDED INFORMAL PRICE ($)
		ROADWAY						
1	201	CLEARING AND GRUBBING	1	LUMP				
2	202	CURB AND GUTTER REMOVED	135	FT				
3	202	PIPE REMOVED, 24" AND UNDER	26	FT				
4	202	PIPE REMOVED, OVER 24"	150	FT				
5	203	EXCAVATION, AS PER PLAN	1988	CU YD				
6	203	EMBANKMENT, AS PER PLAN	309	CU YD				
7	204	PROOF ROLLING	4	HR				
8	204	SUBGRADE COMPACTION	2040	SQ YD				
9	204	EXCAVATION OF SUBGRADE	510	CU YD				
10	204	GRANULAR MATERIAL, TYPE B	510	CU YD				
11	204	GEOTEXTILE FABRIC, TYPE D	620	SQ YD				
12	606	GUARDRAIL, TYPE MGS, AS PER PLAN	90	FT				
13	608	CONCRETE WALK (T=4")	2505	SQ FT				
14	608	CURB RAMP (PD-02)	6	EACH				
15	608	DETECTABLE WARNING (PD-03)	6	EACH				
16	SPEC	BRICK PAVER WALK	6925	SQ FT				
17	SPEC	GRANITE PAVER WALK	290	SQ FT				
18	SPEC	INCREASE OR DECREASE IN EXCAVATION OR EMBANKMENT	500	CU YD				
							ROADWAY SUBTOTAL =	
		EROSION CONTROL						
19	207	PERIMETER FILTER FABRIC FENCE	225	FT				
20	207	INLET PROTECTION	10	EACH				
21	207	CONSTRUCTION SEEDING AND MULCHING	2600	SQ YD				
22	653	TOPSOIL FURNISHED AND PLACED (T=4")	290	CU YD				
23	659	SEEDING AND MULCHING, AS PER PLAN	2600	SQ YD				
24	659	REPAIR SEEDING AND MULCHING, AS PER PLAN	130	SQ YD				
25	659	COMMERCIAL FERTILIZER	0.24	TON				

BID SCHEDULE

BIDDER agrees to perform all work described in the CONTRACT DOCUMENTS for the following unit prices:

John Shields Parkway - Phase 1

CITY OF DUBLIN

REF NO.	(1) ITEM	(2) DESCRIPTION	(3) QUANT.	(4) UNIT	(5) LABOR ($)	(6) MATERIAL ($)	(7) (5)+(6) TOTAL ($)	(8) (3) x (7) TOTAL EXTENDED INFORMAL PRICE ($)
26	659	WATER	15	M GAL				
27	670	DITCH EROSION PROTECTION MAT, AS PER PLAN	95	SQ YD				
28	SPEC	CONCRETE WASHOUT AREA	1	EACH				
							EROSION CONTROL SUBTOTAL =	
		DRAINAGE						
29	604	CURB & GUTTER INLET MANHOLE (AA-S121 WITH AA-S142 CASTING AND CONCRETE COLLAR)	4	EACH				
30	604	CURB INLET (AA-S120)	4	EACH				
31	604	MANHOLE, TYPE C (AA-S102 WITH ST-03)	6	EACH				
32	901	12 INCH PIPE, 706.02, WITH TYPE 1 BEDDING, WITH CMSC 912 COMPACTED GRANULAR MATERIAL	182	FT				
33	901	18 INCH PIPE, 706.02, WITH TYPE 1 BEDDING, WITH CMSC 912 COMPACTED GRANULAR MATERIAL	86	FT				
34	901	36 INCH PIPE, 706.02, WITH TYPE 1 BEDDING, WITH CMSC 912 COMPACTED GRANULAR MATERIAL	519	FT				
35	SPEC	HEADWALL FOR 36" PIPE REMOVED & RESET	1	EACH				
36	SPEC	DETENTION OUTLET CHAMBER	4	EACH				
							DRAINAGE SUBTOTAL =	
		PAVEMENT						
37	204	GEOTEXTILE FABRIC, TYPE D (FOR PERMEABLE PAVEMENT)	1300	SQ YD				
38	259	PAVEMENT REPLACEMENT, TYPE I	6	CU YD				
39	301	ASPHALT CONCRETE BASE	190	CU YD				
40	301	ASPHALT CONCRETE BASE (FOR DRIVEWAY)	10	CU YD				
41	304	AGGREGATE BASE	220	CU YD				
42	304	AGGREGATE BASE (FOR ASPHALT PATH)	60	CU YD				
43	304	AGGREGATE BASE (FOR DRIVEWAY)	20	CU YD				
44	407	NTSS-1HM TRACKLESS TACK COAT	120	GAL				

BID SCHEDULE

BIDDER agrees to perform all work described in the CONTRACT DOCUMENTS for the following unit prices:

John Shields Parkway - Phase 1

CITY OF DUBLIN

REF NO.	(1) ITEM	(2) DESCRIPTION	(3) QUANT.	(4) UNIT	(5) LABOR ($)	(6) MATERIAL ($)	(7) (5)+(6) TOTAL ($)	(8) (3) x (7) TOTAL EXTENDED INFORMAL PRICE ($)
45	407	NTSS-1HM TRACKLESS TACK COAT FOR INTERMEDIATE COURSE	90	GAL				
46	423	CRACK SEAL	50	LB				
47	448	ASPHALT CONCRETE INTERMEDIATE COURSE (MEDIUM TRAFFIC), PG64-22	70	CU YD				
48	448	ASPHALT CONCRETE INTERMEDIATE COURSE (MEDIUM TRAFFIC), PG64-22 (FOR DRIVEWAY)	10	CU YD				
49	448	ASPHALT CONCRETE SURFACE COURSE (MEDIUM TRAFFIC), PG64-22	50	CU YD				
50	448	ASPHALT CONCRETE SURFACE COURSE (MEDIUM TRAFFIC), PG64-22 (FOR ASPHALT PATH)	30	CU YD				
51	448	ASPHALT CONCRETE SURFACE COURSE (MEDIUM TRAFFIC), PG64-22 (FOR DRIVEWAY)	10	CU YD				
52	609	COMBINATION CURB AND GUTTER (RD-02)	50	FT				
53	609	CURB, STRAIGHT 18 INCH	95	FT				
54	609	GRANITE CURB (18 INCH X 6 INCH)	700	FT				
55	609	GRANITE BAND (15 INCH X 6 INCH)	515	FT				
56	609	GRANITE BAND (12 INCH X 6 INCH)	640	FT				
57	609	GRANITE PLANTER CURB (6-1/4 INCH X 6 INCH)	1155	FT				
58	SPEC	PERMEABLE PAVER ROADWAY	330	SQ YD				
59	SPEC	AGGREGATE BASE (NO. 57 STONE)	135	CU YD				
60	SPEC	AGGREGATE BASE (NO. 2 STONE)	495	CU YD				
61	SPEC*	GEOGRID	595	SQ YD				
62	SPEC	BRICK PAVER DRIVEWAY	30	SQ YD				
							PAVEMENT SUBTOTAL =	

BID SCHEDULE

BIDDER agrees to perform all work described in the CONTRACT DOCUMENTS for the following unit prices:

John Shields Parkway - Phase 1

CITY OF DUBLIN

REF NO.	(1) ITEM	(2) DESCRIPTION	(3) QUANT.	(4) UNIT	(5) LABOR ($)	(6) MATERIAL ($)	(7) (5)+(6) TOTAL ($)	(8) (3) x (7) TOTAL EXTENDED INFORMAL PRICE ($)
		WATER WORKS						
63	801	6 INCH WATER PIPE & FITTINGS WITH TYPE 1 BEDDING, WITH ITEM 912 COMPACTED GRANULAR BACKFILL	75	LF				
64	801	8 INCH WATER PIPE & FITTINGS WITH TYPE 1 BEDDING, WITH ITEM 912 COMPACTED GRANULAR BACKFILL	527	LF				
65	801	CONCRETE BLOCKING CLASS C, INCREASE OR DECREASE	50	CU YD				
66	801	DUCTILE IRON FITTINGS, INCREASE OR DECREASE	50	LB				
67	802	6" VALVE AND APPURTENANCES	3	EACH				
68	802	8" VALVE AND APPURTENANCES	3	EACH				
69	803	12" X 8" TAPPING SLEEVE AND VALVE AND APPURTENANCES	1	EACH				
	805	1 INCH WATER SERVICE TAP, COMPELTE	1	EACH				
70	808	CUT AND PLUG 6" WATER SERVICE TAP	1	EACH				
71	809	FIRE HYDRANT, TYPE A	2	EACH				
72	811	INCREASE OR DECREASE IN EXCAVATION AND BACKFILL	50	CU YD				
73	812	1" AIR RELEASE OUTLET	1	EACH				
74	SPEC	SURVEY COORDINATES	1	LUMP				
							WATER WORKS SUBTOTAL =	

BID SCHEDULE

BIDDER agrees to perform all work described in the CONTRACT DOCUMENTS for the following unit prices:

John Shields Parkway - Phase 1

CITY OF DUBLIN

REF NO.	(1) ITEM	(2) DESCRIPTION	(3) QUANT.	(4) UNIT	(5) LABOR ($)	(6) MATERIAL ($)	(7) (5)+(6) TOTAL ($)	(8) (3) x (7) TOTAL EXTENDED INFORMAL PRICE ($)
		TRAFFIC CONTROL						
75	630+	GROUND MOUNTED SUPPORT, NO. 3 POST, TYPE S, AS PER PLAN	56	LF	**DO NOT BID**			
76	630+	2 1/4" SQUARE ANCHOR POST, AS PER PLAN	4	EACH				
77	630+	STREET NAME SIGN SUPPORT, AS PER PLAN	1	EACH				
78	630+	STREET NAME SIGN, AS PER PLAN	2	EACH				
79	630+	SIGN FLAT SHEET, AS PER PLAN	54	SQ FT				
80	630*	WOOD POST, 4"x4", WHITE	9	EACH				
81	644*	REMOVAL OF PAVEMENT MARKING	448	LF				
82	644*	CENTER LINE, 4"	0.09	MI				
83	644*	CROSSWALK LINE, 12"	205	LF				
84	644*	CHANNELIZING LINE, 8"	85	LF				
85	644*	WORD ON PAVEMENT, 72"	1	EACH				
86	644*	LANE ARROW, 72"	1	EACH				
87	644*	STOP LINE, 24"	11	LF				
							TRAFFIC CONTROL SUBTOTAL =	
		LIGHTING						
88	625*	CONDUIT, 3", 725.051, SCH 80, SLEEVE	112	LF				
89	625*	CONDUIT, 3", 725.051, SCH 40	533	LF				
90	625*	CONDUIT, 2", 725.051, SCH 40	222	LF				
91	625*	CONDUIT, JACKED OR DRILLED, 3", 725.051, SLEEVE	110	LF				
92	625*	TRENCH (SL-05)	645	LF				
93	625*	PLASTIC CAUTION TAPE (SL-05)	645	LF				
94	625*	PULL BOX, 725.08, 18"x11"x18" QUAZITE PG1118BG18 OR APPROVED EQUAL	7	EACH				
							LIGHTING SUBTOTAL =	

BID SCHEDULE

BIDDER agrees to perform all work described in the CONTRACT DOCUMENTS for the following unit prices:

John Shields Parkway - Phase 1

CITY OF DUBLIN

REF NO.	(1) ITEM	(2) DESCRIPTION	(3) QUANT.	(4) UNIT	(5) LABOR ($)	(6) MATERIAL ($)	(7) (5)+(6) TOTAL ($)	(8) (3) x (7) TOTAL EXTENDED INFORMAL PRICE ($)
		AEP DUCT BANK						
95	SPEC	6-5 INCH PVC, SCHEDULE 40, CONDUIT CONCRETE ENCASED IN TRENCH WITH CMSC 912 COMPACTED GRANULAR MATERIAL	370	FT				
							AEP DUCT BANK SUBTOTAL =	
		LANDSCAPING						
96	SPEC	PLANTING SOIL PLACED	304	CU YD				
97	SPEC	STRUCTURAL SOIL PLACED	33	CU YD				
98	SPEC	DECIDUOUS SHADE TREES	15	EACH				
99	SPEC	LANDSCAPE PLANTINGS	3283	SQ FT				
							LANDSCAPING SUBTOTAL =	

BID SCHEDULE

BIDDER agrees to perform all work described in the CONTRACT DOCUMENTS for the following unit prices:

John Shields Parkway - Phase 1

CITY OF DUBLIN

REF NO.	(1) ITEM	(2) DESCRIPTION	(3) QUANT.	(4) UNIT	(5) LABOR ($)	(6) MATERIAL ($)	(7) (5)+(6) TOTAL ($)	(8) (3) x (7) TOTAL EXTENDED INFORMAL PRICE ($)
		MISCELLANEOUS						
100	108.03**	TYPE B - CRITICAL PATH METHOD (CPM) SCHEDULE	1	LUMP				
101	614	MAINTAINING TRAFFIC, AS PER PLAN	1	LUMP				
102	623	CONSTRUCTION LAYOUT STAKES	1	LUMP				
103	624	MOBILIZATION	1	LUMP				
104	SPEC	PROOF SURVEY	1	LUMP				
							MISCELLANEOUS SUBTOTAL =	

* DENOTES ODOT CONSTRUCTION AND MATERIAL SPECIFICATIONS (2013 EDITION).
** DENOTES CITY OF DUBLIN GENERAL CONDITIONS SECTION 100.
\+ DENOTES ITEM TO BE FURNISHED AND INSTALLED BY CITY OF DUBLIN; ODOT CONSTRUCTION AND MATERIAL SPECIFICATIONS (2013)
ALL OTHER ITEMS REFERENCE CITY OF COLUMBUS CONSTRUCTION AND MATERIAL SPECIFICATIONS, 2012 EDITION.

GRAND TOTAL =

TOTAL BID FOR PROJECT: _____

SUBMITTED BY: (COMPANY) _____

C. COMBINED BID/PERFORMANCE/PAYMENT BOND

CITY OF DUBLIN
JOHN SHIELDS PARKWAY - PHASE 1

KNOW ALL PERSONS BY THESE PRESENTS, that we, the undersigned _____ (the "Principal") and

_____ (the "Surety"),are hereby held and firmly bound unto the CITY OF DUBLIN, Ohio as obligee in the penal sum of the dollar amount of the bid submitted by the Principal to the CITY OF DUBLIN on _____, 2014 to undertake the project known as the **CITY OF DUBLIN**, **JOHN SHIELDS PARKWAY - PHASE** 1 **PROJECT.**

The penal sum referred to herein shall be the dollar amount of the Principal's bid to CITY OF DUBLIN, incorporating any additive or deductive alternate proposals made by the Principal on the date referred to above to the CITY OF DUBLIN, which are accepted by the CITY OF DUBLIN. In no case shall the penal sum exceed the amount of _ dollars ($_). (If the foregoing blank is not filled in, the penal sum will be the full amount of the Principal's bid, including alternates. Alternatively, if the blank is filled in, the amount stated must not be less than the full amount of the bid including alternates, in dollars and cents. A percentage is not acceptable.)

For the payment of the penal sum well and truly to be made, we hereby jointly and severally bind ourselves, our heirs, executors, administrators, successors, and assigns.

THE CONDITION OF THE ABOVE OBLIGATION IS SUCH, that whereas the above-named Principal has submitted a bid for the CITY OF DUBLIN, JOHN SHIELDS PARKWAY - PHASE 1 PROJECT.

NOW, THEREFORE, if the CITY OF DUBLIN accepts the bid of the Principal and the Principal fails to enter into a proper contract in accordance with the bid, plans, details, specifications, and bills of material; and in the event the Principal pays to the CITY OF DUBLIN the difference not to exceed ten percent of the penalty hereof between the amount specified in the bid and such larger amount for which the CITY OF DUBLIN may in good faith contract with the next lowest bidder to perform the work covered by the bid, or in the event the CITY OF DUBLIN does not award the contract to the next lowest bidder and resubmits the project for bidding, the Principal will pay the CITY OF DUBLIN the difference not to exceed ten percent of the penalty hereof between the amount specified in the bid, or the costs, in connection with the resubmission, of printing new contract documents, required advertising and printing and mailing notices to prospective bidders, whichever is less, then this obligation shall be null and void, otherwise to remain in full force and effect; if the CITY OF DUBLIN accepts the bid of the Principal and the Principal within ten days after the awarding of the contract, enters into a proper contract in accordance with the bid, plans, details specifications, and bills of material, which said contract is made a part of this bond the same as though set forth herein.

NOW ALSO, if the Principal shall well and faithfully do and perform the things agreed by Principal to be done and performed according to the terms of said contract; and shall pay all lawful claims of subcontractors, material men, and laborers, for labor performed and materials furnished in the carrying forward, performing, or completing of said contract; we agreeing and assenting that this undertaking shall be for the benefit of any material man or laborer having a just claim, as well as for the CITY OF DUBLIN herein; then this obligation shall be void; otherwise the same shall remain in full force and effect; it being expressly understood and agreed that the liability of the Surety for any and all claims hereunder shall in no event exceed the penal amount of this obligation as herein stated.

The Surety hereby stipulates and agrees that no modifications, omissions, or additions, in or to the terms of said contract or in or to the plans or specifications therefore shall in any wise affect the obligations of the Surety on the Surety's bond, and the Surety does hereby waive notice of any such modifications, omissions or additions to the terms of the contract or to the plans or specifications.

Signed this _____ day of _____, 2014.

PRINCIPAL:

_____

By: _____

(Signature)

Print Name: _____

Title: _____

Address:

_____

_____

Telephone: ( ) _____

SURETY:

_____

By: _____

(Signature)

Print Name: _____

Title: _____

Address:

_____

_____

Telephone: ( ) _____

SURETY AGENT:

_____

By: _____

(Signature)

Print Name: _____

Title: _____

Address:

_____

_____

Telephone: ( ) _____

D. ALTERNATE BID SECURITY FORM

Bidder Name: _____

Project Name: JOHN SHIELDS PARKWAY - PHASE 1

The undersigned Bidder hereby submits with its bid the following bid security equaling 10% of the total amount of the bid as required by Ohio Revised Code Section 153.54:

[ ] A Certified Check

[ ] A Cashier's Check

[ ] A Letter of Credit pursuant to Chapter 1305 of the Ohio Revised Code

A bid guaranty filed under this form shall be conditioned to provide that if the bid is accepted, the bidder, after the awarding or the recommendation for the award of the contract, whichever the CITY OF DUBLIN designates, will enter into a proper contract in accordance with the bid, plans, details, specifications, and bills of material. All bid guaranties filed hereunder shall be payable to the CITY OF DUBLIN, be for the benefit of the CITY OF DUBLIN, and be deposited with, and held by, the CITY OF DUBLIN.

Bidder Signature: _____

Print Name: _____

E. PERFORMANCE AND PAYMENT BOND

KNOW ALL PERSONS BY THESE PRESENTS, that we, the undersigned _____ as principal and _____ as sureties, are hereby held and firmly bound unto CITY OF DUBLIN ("Obligee") in the penal sum of $, for the payment of which well and truly to be made, we hereby jointly and severally bind ourselves, our heirs, executors, administrators, successors, and assigns.

Signed this _____ day of _____, _____.

THE CONDITION OF THE ABOVE OBLIGATION IS SUCH, that whereas the above named principal did on enter into a contract with CITY OF DUBLIN, which said contract is made a part of this bond the same as though set forth herein;

Now, if the said principal shall well and faithfully do and perform the things agreed by it to be done and performed according to the terms of said contract; and shall pay all lawful claims of subcontractors, material suppliers, and laborers, for labor performed and materials furnished in the carrying forward, performing, or completing of said contract; we agreeing and assenting that this undertaking shall be for the benefit of any material supplier or laborer having a just claim, as well as for the Obligee herein; then this obligation shall be void; otherwise the same shall remain in full force and effect; it being expressly understood and agreed that the liability of the surety for any and all claims hereunder shall in no event exceed the penal amount of this obligation as herein stated.

The said surety hereby stipulates and agrees that no modifications, omissions, or additions, in or to the terms of the said contract or in or to the plans or specifications therefor shall in any wise affect the obligations of said surety on its bond.

Signed this _____ day of _____, 2014.

PRINCIPAL:

_____

By: _____

(Signature)

Print Name: _____

Title: _____

Address:

_____

_____

Telephone: ( ) _____

SURETY:

_____

By: _____

(Signature)

Print Name: _____

Title: _____

Address:

_____

_____

Telephone: ( ) _____

SURETY AGENT:

_____

By: _____

(Signature)

Print Name: _____

Title: _____

Address:

_____

_____

Telephone: ( ) _____

F. AFFIDAVIT OF AUTHORITY

CITY OF DUBLIN

JOHN SHIELDS PARKWAY - PHASE 1

(To be completed and executed if the Contractor is anything other than a sole proprietorship.)

State of _____ (State Where Completing this Form)

County of _____ (County Where Completing this Form) ss:

_____ (Your Name), being duly sworn, deposes and says that he or she is the _____ (Position) of _____ (Business Name), a _____ (Type of Entity) organized and existing under and by virtue of the laws of the State of _____ (State), and having its principal office at:_____(Address), _____ (City), _____ (County),_____ (State).

Affiant further says that he is familiar with the records, minute books and by-laws of_____ (Business Name).

Affiant further says that _____ (Name of Person Signing Contract) _____ (Title of Person Signing Contract) of _____ (Business Name) is duly authorized to sign the Contract for the CITY OF DUBLIN JOHN SHIELDS PARKWAY - PHASE 1 Project on behalf of _____ (Business Name) by virtue of _____.

(Describe how the person signing the Contract has Authority to sign for example: "a provision of the by-laws" or "a resolution of the Board of Directors"—if by resolution, give date of adoption.)

_____ , _____ .

(Your Signature) (Your Position)

The foregoing instrument was acknowledged before me this _____ (date) by _____ (name of person acknowledged). Signature and Seal of person taking acknowledgement:

_____

G. COMBINED DELINQUENT PERSONAL PROPERTY TAX & NONCOLLUSION AFFIDAVIT

State of _____ (State Where Completing this Form)

County of _____ (County Where Completing this Form) ss:

_____ (Your Name), Affiant, being first duly sworn, deposes and says:

1. I am the _____ (Your Title) of _____ (Business Name), the Bidder that has submitted the attached Bid;

2. I am fully informed respecting the preparation and contents of the attached Bid and all pertinent circumstances respecting such Bid, and that such Bid is genuine and is not a collusive or sham Bid;

4. Neither the said Bidder nor any of its officers, partners, owners, agents, representatives, employees, or parties in interest, including this affiant, has in any way colluded, conspired, connived, or agreed directly or indirectly with any other Bidder, firm, or person to submit a collusive or sham Bid in connection with the contract for which the attached Bid has been submitted, or to refrain from Bidding in connection with such contract, or has in any manner directly or indirectly sought by agreement, collusion, communication, or conference with any other Bidder, firm, or person to fix the price or prices in the attached Bid or of any other Bidder, or to fix any overhead, profit, or cost element of Bid price or the Bid price of any other Bidder, or to secure through any collusion, conspiracy, connivance, or unlawful agreement any advantage against the **CITY OF DUBLIN**, **OHIO**, or any person interested in the proposed contract; and

5. The price or prices quoted in the attached Bid are fair, proper, and not tainted by any collusion, conspiracy, connivance, or unlawful agreement on the part of the Bidder or any of its agent's representatives, owners, employees, or parties in interest, including this affiant.

6. Effective this _____ day of _____, **2014**, the Bidder:

(__) is charged with delinquent personal property taxes on the general list of personal property as set forth below:

County	Amount (include total amount, with penalties and interest thereon)
_____County	$_____
_____County	$_____
_____County	$_____
_____County	$_____

Ch

(__) is not charged with delinquent personal property taxes on the general list of personal property in any Ohio county.

Signed: _____

Title: _____

The foregoing instrument was acknowledged before me this _____ (date)

by _____ (name of person acknowledged).

Signature and Seal of person taking acknowledgement:

_____ _____

H. W-9 FORM

Form **W-9**
(Rev. December 2011)
Department of the Treasury
Internal Revenue Service

Request for Taxpayer Identification Number and Certification

Give Form to the requester. Do not send to the IRS.

Print or type
See Specific Instructions on page 2.

Name (as shown on your income tax return)

Business name/disregarded entity name, if different from above

Check appropriate box for federal tax classification:
☐ Individual/sole proprietor ☐ C Corporation ☐ S Corporation ☐ Partnership ☐ Trust/estate

☐ Limited liability company. Enter the tax classification (C=C corporation, S=S corporation, P=partnership) ▶

☐ Other (see instructions) ▶

☐ Exempt payee

Address (number, street, and apt. or suite no.)

Requester's name and address (optional)

City, state, and ZIP code

List account number(s) here (optional)

Part I **Taxpayer Identification Number (TIN)**

Enter your TIN in the appropriate box. The TIN provided must match the name given on the "Name" line to avoid backup withholding. For individuals, this is your social security number (SSN). However, for a resident alien, sole proprietor, or disregarded entity, see the Part I instructions on page 3. For other entities, it is your employer identification number (EIN). If you do not have a number, see *How to get a TIN* on page 3.

Note. If the account is in more than one name, see the chart on page 4 for guidelines on whose number to enter.

Social security number
☐☐☐ – ☐☐ – ☐☐☐☐

Employer identification number
☐☐ – ☐☐☐☐☐☐☐

Part II **Certification**

Under penalties of perjury, I certify that:

1. The number shown on this form is my correct taxpayer identification number (or I am waiting for a number to be issued to me), and
2. I am not subject to backup withholding because: (a) I am exempt from backup withholding, or (b) I have not been notified by the Internal Revenue Service (IRS) that I am subject to backup withholding as a result of a failure to report all interest or dividends, or (c) the IRS has notified me that I am no longer subject to backup withholding, and
3. I am a U.S. citizen or other U.S. person (defined below).

Certification instructions. You must cross out item 2 above if you have been notified by the IRS that you are currently subject to backup withholding because you have failed to report all interest and dividends on your tax return. For real estate transactions, item 2 does not apply. For mortgage interest paid, acquisition or abandonment of secured property, cancellation of debt, contributions to an individual retirement arrangement (IRA), and generally, payments other than interest and dividends, you are not required to sign the certification, but you must provide your correct TIN. See the instructions on page 4.

Sign Here **Signature of U.S. person ▶** **Date ▶**

General Instructions

Section references are to the Internal Revenue Code unless otherwise noted.

Purpose of Form

A person who is required to file an information return with the IRS must obtain your correct taxpayer identification number (TIN) to report, for example, income paid to you, real estate transactions, mortgage interest you paid, acquisition or abandonment of secured property, cancellation of debt, or contributions you made to an IRA.

Use Form W-9 only if you are a U.S. person (including a resident alien), to provide your correct TIN to the person requesting it (the requester) and, when applicable, to:

1. Certify that the TIN you are giving is correct (or you are waiting for a number to be issued),
2. Certify that you are not subject to backup withholding, or
3. Claim exemption from backup withholding if you are a U.S. exempt payee. If applicable, you are also certifying that as a U.S. person, your allocable share of any partnership income from a U.S. trade or business is not subject to the withholding tax on foreign partners' share of effectively connected income.

Note. If a requester gives you a form other than Form W-9 to request your TIN, you must use the requester's form if it is substantially similar to this Form W-9.

Definition of a U.S. person. For federal tax purposes, you are considered a U.S. person if you are:

- An individual who is a U.S. citizen or U.S. resident alien,
- A partnership, corporation, company, or association created or organized in the United States or under the laws of the United States,
- An estate (other than a foreign estate), or
- A domestic trust (as defined in Regulations section 301.7701-7).

Special rules for partnerships. Partnerships that conduct a trade or business in the United States are generally required to pay a withholding tax on any foreign partners' share of income from such business. Further, in certain cases where a Form W-9 has not been received, a partnership is required to presume that a partner is a foreign person, and pay the withholding tax. Therefore, if you are a U.S. person that is a partner in a partnership conducting a trade or business in the United States, provide Form W-9 to the partnership to establish your U.S. status and avoid withholding on your share of partnership income.

Cat. No. 10231X Form **W-9** (Rev. 12-2011)

I. LIST OF SUBCONTRACTORS

CITY OF DUBLIN

JOHN SHIELDS PARKWAY - PHASE 1

NOTE: The bidder must perform at least 50% of the total contract cost with its own forces.

1. Name of Subcontractor (Include names of any parent company) :_____

Federal Identification Number: _____

Address _____

_____

Type of Work:

Subcontractor to Provide:_____

Approximate Percentage of the Contract Cost to be Performed by Subcontractor: _____

Experience Record: _____

_____

_____

2. Name of Subcontractor (Include names of any parent company) :_____

Federal Identification Number: _____

Address: _____

_____

Type of Work:

Subcontractor to Provide:_____

Approximate Percentage of the Contract Cost to be Performed by Subcontractor: _____

Experience Record: _____

_____

_____

3. Name of Subcontractor (Include names of any parent company) :_____

Federal Identification Number: _____

Address: _____

_____

Type of Work:

Subcontractor to Provide:_____

Approximate Percentage of the Contract Cost to be Performed by Subcontractor: _____

Experience Record: _____

_____

_____

4. Name of Subcontractor (Include names of any parent company) :_____

Federal Identification Number: _____

Address: _____

_____

Type of Work:

Subcontractor to Provide:_____

Approximate Percentage of the Contract Cost to be Performed by Subcontractor: _____

Experience Record: _____

_____

_____

5. Name of Subcontractor (Include names of any parent company) :_____

Federal Identification Number: _____

Address: _____

_____

Type of Work:

Subcontractor to Provide:_____

Approximate Percentage of the Contract Cost to be Performed by Subcontractor: _____

Experience Record: _____

_____

_____

Add additional sheets if necessary.

J. CONTRACTOR QUALIFICATION STATEMENT

Contractor: _____

Date: _____

Project: **JOHN SHIELDS PARKWAY - PHASE** 1

The foregoing Contractor submits this Statement of Qualifications to the CITY OF DUBLIN, OHIO as part of its bid for the above named Project and represents that the information contained herein is complete and accurate to the best of the Contractor's knowledge. The CITY OF DUBLIN reserves the right to reject any, part of any, or all bids and to waive any informalities and irregularities. The Contractor expressly acknowledges this right of the CITY OF DUBLIN to reject any or all bids or to reject any incomplete or irregular bid. Contractor must furnish all information requested on this Statement of Qualifications. Failure to do so may result in disqualification of the bid. The CITY OF DUBLIN may consider the information submitted on this form in determining the lowest and best Contractor for the Project giving such weight to each item as the CITY OF DUBLIN deems appropriate. The CITY OF DUBLIN may conduct such investigations as are deemed necessary to establish the qualifications and financial ability of the Contractor and its subcontractors and suppliers.

The Contractor authorizes the CITY OF DUBLIN and its representatives to contact the owners, design professionals, and others having knowledge (collectively "Contacts") on projects on which the Contractor has worked—whether listed on this form or not—and authorizes and requests such Contacts to provide the CITY OF DUBLIN with a candid evaluation of the Contractor's performance. By submitting its bid, the Contractor agrees that if it or any person, directly or indirectly, on its behalf or for its benefit brings an action against any of such Contacts or the employees of any of them as a result of or related to such candid evaluation, the Contractor will indemnify and hold harmless such Contacts and the employees of any of them from any claims whether or not proven that are part of or are related to such action and from all legal fees and expenses incurred by any of them arising out of or related to such legal action. This obligation is expressly intended for the benefit of such Contacts and the employees of each of them. By submitting this form, Contractor agrees that the CITY OF DUBLIN's determination of which Contractor is the lowest and best Contractor shall be final and conclusive, and that if the Contractor or any person on its behalf challenges such determination in any legal proceeding, the Contractor will indemnify and hold the CITY OF DUBLIN and its employees and agents harmless from any claims included or related to such legal proceeding, whether or not proven, and from legal fees and expenses incurred by the City, its employees, or agents that arise out of or are related to such challenge.

NAME OF PROJECT: JOHN SHIELDS PARKWAY - PHASE 1

1. ORGANIZATION

1.1 How many years has your organization been in business as a Contractor?

1.2 How many years has your organization been in business under its present business name?

1.2.1 Under what other or former names has your organization operated?

1.3 If your organization is a corporation, answer the following:

1.3.1 Date of incorporation:

1.3.2 State of incorporation:

1.3.3 President's name:

1.3.4 Vice President's name(s):

1.3.5 Secretary's name:

1.3.6 Treasurer's name:

1.4 If your organization is a partnership, answer the following:

1.4.1 Date of organization:

1.4.2 Type of partnership (if applicable):

1.4.3 Name(s) of general partner(s):

1.5 If your organization is individually owned, answer the following:

1.5.1 Date of organization:

1.5.2 Name of owner:

1.6 If the form of your organization is other than those listed above, describe it and name the principals:

2. LICENSING

2.1 List jurisdictions and trade categories in which your organization is legally qualified to do business, and indicate registration or license numbers, if applicable.

2.2 List jurisdictions in which your organization's partnership or trade name is filed.

3. EXPERIENCE

3.1 List the categories of work that your organization normally performs with its own forces.

3.2 Claims and Lawsuits (If the answer to any of the questions below is yes, please attach details.)

3.2.1 Has your organization ever failed to complete any work?

3.2.2 Within the last five (5) years has your organization or any of its officers initiated any Claims, had any Claims initiated against it or them, or been involved in or is currently involved in any mediation or arbitration proceedings or lawsuits suits related to any construction project, or has any judgments or awards outstanding against it or them? If the answer is yes, please attach the details for each Claim, including the names and telephone numbers of the persons who are parties, the amount of the Claim, the type of Claim and basis for the Claim, and the outcome.

Note: As used in this document "Claim" means a Claim initiated under the Contract Documents for a project.

3.3 Within the last five years, has any officer or principal of your organization ever been an officer or principal of another organization when it failed to complete a construction contract? If the answer is yes, please attach details for each instance, including the names and telephone numbers of the persons who are parties to the contract, and the reason(s) the contract was not completed.

3.4 On a separate sheet, list construction projects your organization has in progress with an original Contract Sum of more than $ $1,147,500.00, giving the name of project, owner and its telephone number, design professional and its telephone number, contract amount, percent complete and scheduled completion date.

3.4.1 State total amount of work in progress and under contract:

3.5 Provide the following information for each contract your organization has had during the last five (5) years, including current contracts, where the Contract Sum is fifty percent (50%) or more of the bid amount for this Project, including add alternates. If there are more than ten (10) of these contracts only provide information on the most recent ten (10) contracts, including current contracts.

Project And Work	Contract Sum	Owner's Representative & Telephone Number	Engineer's Or Architect's Representative Name & Telephone Number

3.5.1 Provide the following information for each project your organization has had during the last five (5) years, which your organization believes is of

comparable or greater size and complexity than the Owner's project. If there are more than five (5) of these projects, only provide information on the most recent five (5) projects, including current projects.

Project And Work	Contract Sum	Owner's Representative & Telephone Number	Engineer's Or Architect's Representative Name & Telephone Number

3.5.2 State average annual amount of construction work your organization has performed during the last five years.

3.5.3 If any of the following members of your organization's management--president, chairman of the board, or any director--operates or has operated another construction company during the last five (5) years, identify the member of management and the name of the construction company.

3.5.4 If your organization is operating under a trade name registration with the Secretary of State for the State of Ohio, identify the entity for which the trade name is registered. If none, state "none."

3.5.5. If your organization is a division or wholly-owned subsidiary of another entity or has another relationship with another entity, identify the entity of which it is a division or wholly-owned subsidiary or with which it has another relationship and also identify the nature of the relationship. If none, state "not applicable."

3.6 On a separate sheet, list the construction education, training and construction experience for each person who will fill a management role on the Project, including without limitation the Project Executive, Project Engineer, Project Manager, and Project Superintendent. For each person listed, include with the other information the last three projects on which the person worked and the name and telephone number of the Design Professional and the Owner.

4. REFERENCES

4.1 Trade References:

4.2 Bank References:

4.3 Surety:

4.3.1 Name of bonding company:

4.3.2 Name and address of agent:

5. FINANCING

5.1 Financial Statement

5.1.1 Attach a financial statement, preferably audited, including your organization's latest balance sheet and income statement showing the following items:

Current Assets (e.g., cash, joint venture accounts, accounts receivable, notes receivable, accrued income, deposits, materials inventory and prepaid expenses);

Net Fixed Assets;

Other Assets;

Current Liabilities (e.g., accounts payable, notes payable, accrued expenses, provision for income taxes, advances, accrued salaries and accrued payroll taxes); and

Other Liabilities (e.g., capital, capital stock, authorized and outstanding shares par values, earned surplus and retained earnings).

5.1.2 Name and address of firm preparing attached financial statement, and date thereof.

5.1.3 Is the attached financial statement for the identical organization named on page one?

5.1.4 If not, explain the relationship and financial responsibility of the organization whose financial statement is provided (e.g., parent-subsidiary).

5.2 Will the organization whose financial statement is attached act as guarantor of the contract for construction?

Certification. The undersigned certifies for the reliance of the Owner that after diligent investigation, to the best of the undersigned's belief, the information provided with this Contractor's Qualification Statement is true, accurate and not misleading.

SIGNATURE

Dated at this ____ day of _____, 2014.

Name of Organization: _____

By: _____(Print Name)

Signature: _____

Title: _____

_____, being duly sworn, deposes and says that the information provided herein is true and sufficiently complete so as not to be misleading.

Subscribed and sworn before me this _____ day of _____, 2014.

_____
Notary Public

My Commission Expires: _____

SEAL

CONTRACTOR'S ORGANIZATION

General Information

Address:_____

Telephone and Facsimile: _____

E-mail address: _____

Web site: _____

If address given above is a branch office address, provide principal home office address: _____

_____

Type of Organization

The Contractor's Organization is a:

__ Corporation

Date and State of Incorporation: _____

Executive Officers: (Names and Addresses)_____

_____

__ Partnership

Date and State of Organization: _____

Type of Partnership: __ General __ Limited __ Limited Liability __ Other: _____

Current General Partners: (Names and Addresses)_____

_____

__ Joint Venture

Date and State of Organization: _____

Joint Venturers: (For each indicate the name, address and form and state of organization, as well as the managing or controlling Joint Venturer if applicable.)_____

_____

_____

_____

__ Limited Liability Company

Date and State of Organization: _____

Members: (Names and Addresses)_____

_____

_____

_____

__ Sole Proprietorship

Date and State of Organization: _____

City or Citys: (Names and Addresses)_____

_____

__ Other

Type of Organization: _____

State of Organization: _____

Citys and/or Principals: (Names and Addresses)_____

_____

In addition to the above categories of business entities, indicate whether Contractor's organization is certified as a:

__ Disadvantaged Business Enterprise Certified by:

_____

__ Minority Business Enterprise Certified by:

_____

__ Women's Business Enterprise Certified by:

_____

__ Historically Underutilized Business Zone Small Business Concern Certified by:_____

LICENSING AND REGISTRATION

Jurisdictions in which Contractor is legally qualified to practice: (Indicate license or registration numbers for each jurisdiction, if applicable, and type of license or registration. Attach separate sheet as necessary.)

_____

_____

In the past five years, has Contractor had any business or professional license suspended or revoked? __ Yes __ No

If yes, describe circumstances on separate attachment, including jurisdiction and bases for suspension or revocation.

CONTRACTOR'S PERSONNEL AND APPROACH

Key Construction Personnel. Create and attach Schedule A, listing the Contractor's: 1) Key Construction Personnel who will work on the Project; 2) their construction experience; and, 3) the percentage of time that each is anticipated to devote to the Project.

List types of work generally performed by Contractor's own work force:

_____

_____

_____

Subcontractors

Indicate criteria used in the selection of subcontractors (Indicate if Not Applicable).

__ Price

__ Financial strength

__ Bonding capacity

__ Previous experience with Contractor

__ Previous experience in industry

__ Subcontractor's reputation in industry

__ Availability of sufficient personnel

__ Safety record

__ Other: _____

State Contractor's policy on the bonding of its subcontractors:_____

_____

_____

Describe Contractor's proposed technical and management approach to the Project, including approaches to quality, time and cost control: (Attach additional sheets as necessary.)

CONTRACTOR'S RELEVANT EXPERIENCE

Past Projects List. In the chart below, list at least five construction projects Contractor has worked on in the past five (5) years with project delivery systems similar in size and scope to the one to be employed for this Project. (For Joint Ventures, list each joint venturer's projects separately).

City Name	Project Type	Contract Amount	Completion Date	Contact Name and Number

Current Projects List. In the chart below, list all current projects of the Contractor, including projects not yet underway, approximate dollar value of each and the percentage of completion of each project. (For Joint Ventures, list each joint venturer's projects separately).

City Name	Project Type	Contract Amount	Percentage Complete	Contact Name and Number

Annual Construction Volume. Indicate the annual volume of work completed for the past three years:

Year ____ _____

Year ____ _____

Year ____ _____

In the past five years, has Contractor defaulted, been terminated for cause or failed to complete a construction contract awarded to it? __ Yes __ No

If yes, describe circumstances on separate attachment, including dates and owner, and if applicable, Contractor's surety.

In the past five years, has any officer, partner, joint venturer or proprietor of the Contractor ever failed to complete a construction contract awarded to that person or entity in their name or on behalf of another organization? __ Yes __ No

If yes, describe circumstances on separate attachment, including dates and City, and if applicable, surety.

Describe all litigation arising from Contractor's active projects or projects worked on within the last five years. (Attach additional sheets as necessary.)

CONTRACTOR'S SAFETY PROGRAM

If Contractor has a written safety program, attach a copy.

Does the Contractor's safety program include instructions on the following:

Safety work practices __ Yes __ No

Safety supervision __ Yes __ No

Toolbox safety meetings __ Yes __ No

Emergency procedures __ Yes __ No

First aid procedures __ Yes __ No

Accident investigation __ Yes __ No

Fire protection __ Yes __ No

New workers' orientation __ Yes __ No

Do you have a safety officer/department in your company? __ Yes __ No

If yes,

Name: _____

Title: _____

Phone: _____

Do you conduct project safety inspections? __ Yes __ No

If yes, how often? _____

Who conducts this inspection?

Name: _____

Title: _____

Do you hold project safety meetings for field supervisors? __ Yes __ No

If yes, how often? __ Weekly __ Bi-weekly __ Monthly __ Less often as needed

Do you have in place an instruction program on safety for newly hired or promoted supervisors? __ Yes __ No

If yes, please attach a copy of program format.

If craft "toolbox" safety meetings are held, what is their frequency? __ Weekly __ Bi-weekly __ Monthly __ Less often as needed

Do you have a drug and alcohol testing policy? __ Yes __ No

If Yes, attach a copy of the policy.

Provide Contractor's OSHA No. 300 Log and Summary of Occupational Injuries and Illnesses for the past five years.

List all OSHA Citations and Notifications of Penalty, monetary or other, received within the last five years: (Indicate final disposition as applicable. Attach additional sheets as necessary.)

List all safety citations of violations under state law received within the last five years: (Indicate final disposition as applicable. Attach additional sheets as necessary.)

SURETY AND INSURANCE

Surety Company: (Name and Address)

Agent: (Name, Address and Telephone Number)

Total bonding capacity: $ _____

Limit per project: $ _____

Available bonding capacity as of this date: $ _____

CONTRACTOR FINANCIAL INFORMATION

List principal banks used, the approximate value of outstanding loans and general repayment history, as well as the Name, Address and Telephone Number of a contact person:

Attach audited financial statements for the past three (3) years, including latest balance sheet.

State whether Contractor, or any of the individuals identified in Article 1, has/have been the subject of any bankruptcy proceeding within the last five (5) years.

__ Yes __ No

If yes, describe circumstances on separate attachment.

STATEMENT OF POTENTIAL CONFLICTS OF INTEREST

Provide information about any business associations, financial interests or other circumstances that may create a conflict of interest with the City or any other Party known to be involved in the Project.

OTHER INFORMATION

Within the past five years, has Contractor, or any of the individuals identified in Article 1 and/or Schedule A been the subject of any criminal indictment or judgment of conviction for any business-related conduct constituting a crime under state or federal law? __ Yes __ No

If yes, describe circumstances on separate attachment.

Within the past five years, has Contractor or any of the individuals identified in Article 1 and/or Schedule A been the subject of any federal or state suspension or disbarment? __ Yes __ No

If yes, describe circumstances on separate attachment.

Within the past five years, has Contractor, or any of the individuals identified in Article 1 and/or Schedule A been the subject of any formal proceeding or consent order with a state or federal environmental agency involving a violation of state or federal environmental laws? __ Yes __ No

If yes, describe circumstances. (Attach additional sheets as necessary.)

REFERENCES

Provide one additional reference for each of the following categories.

1. City

Name: _____

Address: _____

Telephone No.: _____

Contact Person: _____

2. Architect/Engineer

Name: _____

Address: _____

Telephone No.: _____

Contact Person: _____

3. Subcontractor

Name: _____

Address: _____

Telephone No.: _____

Contact Person: _____

The Undersigned, on behalf of the Contractor, certifies under that the information provided here, or attached to this form, is true and sufficiently complete to the best of the Contractor's knowledge.

CONTRACTOR

Signature_____

Printed Name: _____

Title: _____

Date: _____

III. ADDITIONAL CONTRACT DOCUMENTS

A. CITY OF DUBLIN/CONTRACTOR AGREEMENT

STANDARD AGREEMENT

CITY OF DUBLIN, OHIO

I. INTRODUCTION

This Agreement is entered into on , by and between the CITY OF DUBLIN, OHIO ("Owner"), located at 5200 Emerald Parkway, Dublin, Ohio 43017 , and ("Contractor'), located at for the CITY OF DUBLIN JOHN SHIELDS PARKWAY - PHASE 1 PROJECT ("Project").

THIS DOCUMENT HAS IMPORTANT LEGAL CONSEQUENCES. CONSULTATION WITH AN ATTORNEY IS ENCOURAGED WITH RESPECT TO ITS EXECUTION, COMPLETION AND MODIFICATION.

The Owner, a political subdivision of the State of Ohio, and the Contractor have entered into this Owner-Contractor Agreement ("Agreement") as of the date set forth above. The Owner and the Contractor agree as follows:

1 WORK.

1.1 The Contractor shall furnish all the labor, services, materials, plant, equipment, tools, scaffolds, appliances, transportation, and all other things (collectively called the "Work") necessary for the timely and proper completion of the Work described in the Contract Documents for the Project. The Contractor shall provide the Performance and Payment Bonds on the forms and in the manner described in the Contract Documents.

1.2 CLEANUP. Contractor shall cleanup, repair, restore and otherwise return any site or location provided by Owner to the condition in which it was delivered to Contractor. Contractor shall repair, at its sole expense, any property it damages, whether part of the work or not, to a condition acceptable to Owner.

1.3 COMPLETION. The Project shall be finally completed as follows: **substantially complete by November 21, 2014 and total completion April 24, 2015**. The Contractor shall at all times furnish sufficient skilled workers, materials, and equipment to perform the Work in strict conformance with the Contract Documents and to the entire satisfaction of the Owner, so as to complete the Project by the Date for Final Completion. All materials and equipment provided shall be new, free from all defects, fit for the purpose for which intended, and merchantable.

1.4 SUPERVISION. The Contractor shall assign a competent Project Supervisor who shall be present on site. At the Owner's request and without additional charge to Owner, the Contractor shall replace the Project Supervisor. The Owner's Representative shall not be responsible for the acts or omissions of the Project Supervisor or his assistants. At a minimum, the Project Supervisor shall be present on site whenever any Contractor or Subcontractor personnel are present on site.

1.5 TAXES AND FEES. Contractor is subject to and responsible for paying fees to obtain all applicable licenses, permits, and other permissions necessary to perform its obligations under this

Contract. Contractor is responsible for paying federal, state, and local taxes. Contractor agrees to withhold all income taxes due or payable under the provisions of Income Tax Ordinances of the Owner, for qualifying wages, salaries, and commissions paid to its employees and further agrees that any of its sub-contractors shall be required to agree to withhold any such income taxes due for services performed under this Contract.

2 CONTRACT DOCUMENTS.

2.1 The Contract Documents consist exclusively of:

- This Agreement
- Invitation to Bid
- Instructions to Bidders
- Prevailing Wage Rates (if Applicable)
- Proposal
- Bid Schedule
- Performance and Payment Bonds
- Delinquent Personal Property Tax & Noncollusion Affidavit
- Affidavit of Authority (If applicable)
- List of Subcontractors
- Contractor Qualification Statement
- CITY OF DUBLIN General Conditions Division 100
- Supplemental General Conditions
- The current version of the CMS, excluding Division 100
- Specifications
- Supplemental Specifications
- Notice of Award to Bidder
- Notice to Proceed
- Final Affidavit of Compliance with Prevailing Wages
- Plans and Drawings

If there is a conflict between any of the Contract Documents, the document listed first above shall control.

3 OWNER'S REPRESENTATIVE.

3.1 The City Engineer and/or his designee is the Owner's Representative with respect to all matters involving the Owner.

3.2 Except as specifically stated to the contrary elsewhere in this Agreement, the Contractor shall direct all communications to the Owner through the Owner's Representative, although the City Manager and Fiscal Officer of the Owner are also authorized to send written communications to the Contractor.

3.3 The Owner's Representative will monitor the progress of the Contractor's Work and will conduct regular inspections of the progress of the Work as provided in the Contract Documents. Such inspections shall not relieve the Contractor of any of its obligations under the Contract Documents.

3.4 The Contractor shall at all times provide the Owner's Representative access to the Work.

4 TIME FOR COMPLETION AND PROJECT COORDINATION.

4.1 Project Time Schedule. The Owner anticipates that Work on the Project will begin upon its issuance of a Notice to Proceed and be completed as follows: **substantially complete by November 21, 2014 and total completion April 24, 2015**, unless the Owner and Contractor agree to different commencement and completion dates.

4.2 Contractor is responsible for scheduling its subcontractors and for any delay resulting from their performance.

4.3 TIME IS OF THE ESSENCE. THE DATES IN THE PROJECT TIME SCHEDULE ARE OF THE ESSENCE OF THIS AGREEMENT. THE CONTRACTOR SHALL PROSECUTE ITS WORK IN ACCORDANCE WITH THE PROJECT TIME SCHEDULE, INCLUDING ANY AMENDMENTS THERETO.

5 DELAYS AND ACCELERATIONS.

5.1 NOTICE OF DELAYS. The Contractor shall give the Owner written notice of any delay affecting its Work within 24 hours of the commencement of the delay. The notice shall state in all capital letters at least 12 point font "NOTICE OF DELAY." The failure to give the required notice or include the required "NOTICE OF DELAY" language shall constitute an irrevocable waiver of the Contractor's right to seek an extension of time and/or additional compensation/damages for the delay. The Owner, in its sole and reasonable discretion, shall determine whether a delay shall entitle the Contractor to an extension of time, additional payment, or both. Any of the foregoing shall only be granted pursuant to the procedures for Change Orders set forth in this Agreement.

5.2 ACCELERATION OF THE WORK. If the Contractor fails to perform as required by the Contract schedule, the Owner may require the Contractor to accelerate its Work by adding workers or working additional shifts, extended shifts or overtime, so that the Work is in final form before the Date for Final Completion. If the Owner requires the Contractor to accelerate its Work, the Contractor shall take the required action within two days of the Notice. If the acceleration is not due to fault of the Contractor, Owner shall issue a Change Order increasing the Contract Sum to pay the Contractor for the Contractor's additional costs of accelerating its Work so that the Work is in final form before the Date for Final Completion. If there is a dispute as to whether the Contractor is entitled to a Change Order for accelerating its Work, the Contractor shall proceed to accelerate its Work without waiting for a Change Order or payment of any additional compensation, but may reserve its right to make a claim against the Owner for its additional costs incurred in accelerating its Work. The Contractor's additional costs for accelerating its Work shall be determined in accordance with Paragraph 5.2.2.

5.2.1 OWNER'S OBLIGATION TO PAY. The Owner shall pay the Contractor, as provided in this Paragraph, for the Contractor accelerating its Work so that its Work is in final form before the Date for Final Completion so long as the acceleration is not required as a result of the Contractor's failure to stay on schedule. The Owner shall not be required to compensate the Contractor for accelerating its Work based on the Contractor's own decision so that the Work is in final form by the Date for Final Completion.

5.2.2 COMPENSATION FOR ACCELERATION OF THE WORK. To the extent that the Owner requires the Contractor to accelerate its Work and is obligated to pay under Section 5.2.1, the Owner shall pay the Contractor for the Contractor's additional costs of accelerating its Work, as determined in accordance with this Paragraph. The additional costs of accelerating the Work shall be (a) any premium for overtime, additional shift work, or extended shift work, (b) the cost of any additional supervision required by the acceleration, (c) out of pocket cost of any additional equipment required for the acceleration, and (d) overhead, including home office overhead, and profit equal to ten percent (10%) of the total amount of items (a) and (b) for which additional compensation is permitted under this Paragraph. The foregoing shall be the only additional compensation and/or damages the Contractor shall be entitled to receive for accelerating its Work so that it is complete before the Date for Final Completion. As a condition precedent to its recovery of additional compensation, the Contractor shall provide the Owner with full information about the costs of accelerating its Work in the form and format requested by the Owner.

6 CORRECTIVE ACTION.

6.1 If the Owner determines that the Contractor is not cooperating or coordinating its work properly with its subcontractors, not supplying sufficient skilled workers, not cleaning up the Project, not furnishing the necessary materials, equipment, or any temporary services or facilities to perform the Work in strict conformance with the Contract Documents, or the Contractor is not on schedule, or is not otherwise performing its obligations under the Contract Documents, THE CONTRACTOR SHALL IMMEDIATELY, AND IN NOT LESS THAN FORTY-EIGHT (48) HOURS AFTER NOTICE OF SUCH DETERMINATION, OR SUCH LESSER TIME AS MAY BE PROVIDED IN THE CONTRACT DOCUMENTS, (1) COMMENCE SUCH ACTION AS IS NECESSARY TO CORRECT THE DEFICIENCIES NOTED BY THE OWNER, (2) PROCEED TO USE ITS BEST EFFORTS TO CORRECT SUCH DEFICIENCIES WITHIN THIRTY (30) DAYS OF SUCH NOTICE OR BY THE DEADLINE FOR COMPLETION OF THE PROJECT SET FORTH IN THIS AGREEMENT WHICHEVER IS SOONER AND/OR, (3) IF THE OWNER INSTRUCTS THE CONTRACTOR TO TAKE SPECIFIED CORRECTIVE ACTION, SHALL IMMEDIATELY TAKE SUCH CORRECTIVE ACTION, including but not limited to increasing the number of skilled workers, providing temporary services or facilities, and cleaning up the Project. Such corrective action shall be taken and continued uninterruptedly without waiting to initiate any dispute under Paragraph 11 of this Agreement or the resolution of any dispute initiated under such paragraph.

7 CONTRACT SUM. The lump sum Contract Sum to be paid by the Owner to the Contractor, as provided herein, for the satisfactory performance and completion of the Project and all of the duties, obligations and responsibilities of the Contractor under this Agreement and the other Contract Documents will be $. The Contract Sum includes all federal, state, county, municipal, and other taxes imposed by law, including but not limited to any sales, use, and personal property taxes payable by or levied against the Contractor because of the Work or the materials incorporated into the Work. The Contractor shall pay any such taxes.

8 LIQUIDATED DAMAGES.

8.1 The Contractor shall have its work substantially completed by the date stated in Paragraph 1.3; the timeline may be varied following award of the contract based upon the Contractor's ability to perform the work on a different timeline acceptable to the Owner. By entering into this Agreement, the Contractor agrees that the period for performing the Work is reasonable and that the Contractor's Work can be substantially complete by the date stated in this Agreement.

8.2 If the Contractor does not have its Work on the Project substantially complete by the date stated in Paragraph 1.3 or as otherwise agreed by the parties, the Contractor will pay the Owner (and the Owner may set off from sums coming due the Contractor) liquidated damages in accordance with the Contract Documents.

8.3 The Contractor acknowledges by signing this Agreement with the Owner that the amount of liquidated damages represents a reasonable estimate of the actual damages the Owner would incur if the work is not substantially complete by the foregoing date and that the damages that may result from the failure to substantially complete the work by the foregoing date are uncertain and difficult to ascertain. These liquidated damages are damages for loss of use of the Project, and the Contractor in addition to the liquidated damages will be obligated to indemnify and hold the Owner harmless from any claims, and if the Work on the Project is accelerated because of delay, for all costs related to the acceleration of the Work, as provided in the Contract Documents. In addition to such Liquidated Damages, the Contractor shall indemnify, defend and hold the Owner and its employees and agents harmless from any and all claims, whether or not such claims are proven, and from all costs and expenses incurred, as a result of or related to such claims, including but not limited to attorneys' and consultants' fees and expenses, provided that such claims arise out of or are related to the Contractor's failure to Substantially Complete its Work by its Date for Substantial Completion. These Liquidated Damages are in addition to any other remedies available to the Owner under the Contract Documents.

9 LIMITATION AND LIABILITY.

9.1 The Owner's total liability under this Agreement shall be limited to the amount set forth in the Finance Director's certificate accompanying this Agreement. Under no circumstances shall the elected officials, officers, employees, council members, or agents of the Owner be personally liable for any obligations or claims arising out of or related to this Agreement.

10 PAYMENT

10.1 APPLICATIONS FOR PAYMENT. Payment applications shall be submitted on a monthly basis and shall reflect the amount of work completed as of the date the application for payment is submitted. On or before Completion, the Contractor shall submit to the Owner, an itemized payment application for such period in the following format and with one copy of the following documentation: 1) Invoice for work performed and materials and equipment provided for the previous pay period; 2) Current list of the Contractor's Subcontractors and suppliers showing their respective contract sums, amount paid, and amount due; 3) Contractor's Affidavit of Release of Liens with and lien releases in the format provided by the Owner for all the Contractor's Subcontractors and suppliers current through the date of the Contractor's previous Application for Payment; 4) Such

other supplemental information as the Owner may require. Such other information may include a schedule of all materials and equipment stored on site.

10.2 The Owner may withhold payment in whole or in part, and may demand that the Contractor refund amounts previously paid, to protect the Owner from loss because of: 1) The Contractor's default or failure to perform any of its obligations under the Contract Documents, including but not limited to: failure to provide sufficient skilled workers; Work, including equipment or materials, which is defective or otherwise does not conform to the Contract Documents; failure to conform to the Project Time Schedule; and failure to follow the directions of or instructions from the Owner; 2) The Contractor's default or failure to perform any of its obligations under another contract that it has with the Owner; 3) The filing of third party claims, or reasonable evidence that third party claims have been or will be filed; 4) The Work has not proceeded to the extent set forth in the application for payment; 5) Any representations made by the Contractor are untrue; 6) The failure of the Contractor to make payments to its Subcontractors; 7) Damage to the Owner's property or the property of another person or laborer; 8) The determination that there is a substantial possibility that the Work cannot be completed for the unpaid balance of the Contract Sum; and/or 9) Liens filed or reasonable evidence indicating the probable filing of such liens.

10.3 The Owner will pay the Contractor within 30 days after receipt of the Contractor's payment application, provided that the payment application has been properly submitted on a timely basis and is accompanied by all of the required documentation. The Owner may establish a cut-off date for the submission of the payment application.

11 RETAINAGE.

11.1 AMOUNT OF PAYMENTS. Subject to Paragraph 8.1, the amount of the payments to the Contractor shall be determined in accordance with the following paragraphs:

11.2 PAYMENTS. Payments under the contract shall be made at the rate of 95% of the amount set forth in the Contractor's payment application and approved by the Owner until the Work is 50% complete. When more than fifty percent (50%) of the Work has been completed, the amount retained may be reduced at the City's sole discretion. The Engineer may also, at any time, increase retainage by any amount needed to protect the City's interests with respect to any incomplete, defective or unsatisfactory Work; costs or damages incurred by the City that are subject to the Contractor's indemnification obligations; or back charges that the City may assess against the Contractor.

11.3 DOCUMENTATION. Upon request, the Contractor immediately shall supply the Owner with such information as may be requested so as to verify the amounts due to the Contractor, including but not limited to original invoices for materials and equipment and documents showing that the Contractor has paid for such materials and equipment, and so as to verify that amounts due laborers, subcontractors, and materialmen have been paid to them.

11.4 FINAL PAYMENT.

11.4.1 The final application for payment shall be itemized, and the Contractor shall ensure that the final application for payment shall contain one (1) copy of each of the following documents, if not previously delivered to the Owner: 1) All items from Paragraph 10.1; 2) Consent of the Contractor's Surety to Payment; 3) An assignment to the Owner of all

warranties obtained or obtainable by the Contractor from manufacturers and suppliers of equipment and materials incorporated into the Work by written instrument of assignment in a form acceptable to the Owner; and 4) Such other documentation as required by the Contract Documents, the Owner, or applicable law.

11.4.2 The making of Final Payment by the Owner shall not constitute a waiver of Claims by the Owner for the following: 1) Liens, Claims, security interests, or encumbrances arising out of the Contract Documents that are unsettled; 2) Failure of the Work to comply with the requirements of the Contract Documents; 3) Terms of special warranties required by the Contract Documents; 4) Claims for Indemnification; 5) Claims about which the Owner has given the Contractor written notice; or 6) Claims arising after Final Payment.

11.5 ESCROW ACCOUNT. The Owner and the Contractor agree that no escrow account shall be required in connection with this Agreement and that retained funds will not earn interest.

12 CHANGE ORDERS.

12.1 A Change Order is a written instrument signed by the Owner and the Contractor stating their agreement upon a change in the Work, the amount of the adjustment or the method for computing the amount of the adjustment of the Contract Sum, if any, and the extent of the adjustment in the Project Time Schedule, if any.

13 CLAIMS AND DISPUTES.

13.1 A Claim is a demand or assertion by one of the parties seeking, as a matter of right, adjustment, or interpretation of the terms of the Contract Documents, payment of money, extension of time, or other relief with respect to the terms of the Contract Documents, provided that the Owner's decision to adjust or withhold payment under Paragraph 10.2 shall not be considered a Claim. The responsibility to substantiate claims shall rest with the party making the Claim. The Contractor shall not knowingly present or cause to be presented a false or fraudulent Claim. As a condition precedent to making a claim, the Contractor shall submit an affidavit sworn to before a notary public or other person authorized to administer oaths in the State of Ohio and executed by an authorized representative of the Contractor, which states that:

13.1.1 The Claim which is submitted herewith complies with Paragraph 13.1 of the Owner-Contractor Agreement, which provides that the "Contractor shall not knowingly present or cause to be presented a false or fraudulent Claim."

13.1.2 Claims must be made by written notice in an acceptable written medium. Claims may not be submitted via email.

13.1.3 If the Contractor wishes to make a Claim for an increase in the Contract Sum, written Notice as provided herein shall be given before proceeding to execute the Work.

13.1.4 If the Contractor wishes to make a Claim for additional time, the Contractor shall include an estimate of cost and probable effect of delay on progress of the Work. In the event of continuing delay, only one Claim is necessary. If adverse weather conditions are the basis for a Claim for additional time, such claim shall be documented by data substantiating that weather conditions were abnormal for the period of time and could not have been

reasonably anticipated, and that weather conditions had an adverse effect on the scheduled construction.

13.1.5 If conditions are encountered at the site which are (1) subsurface or otherwise concealed physical conditions that differ materially from those indicated in the Contract Documents AND (2) unknown physical conditions of an unusual nature that differ materially from those ordinarily found to exist and generally recognized as inherent in construction activities of the character provided for in the Contract Documents, then the observing party shall give written notice to the other party promptly before conditions are disturbed. If the conditions meet the requirements of (1) AND (2) and cause an increase or decrease in the Contractor's cost of, or time required for, performance of any part of the Work, the Owner will issue an appropriate Change Order.

13.1.6 The Contractor shall make all claims in writing within seven (7) calendar days after the occurrence of the event giving rise to the Claim. Failure to do so shall be an irrevocable waiver of the Claim.

13.1.7 Within ten (10) days of its receipt of a written request, the Contractor shall make available to the Owner or its representative any books, records, or other documents in its possession or to which it has access relating to any Claim and shall require its Subcontractors, regardless of tier, and materialmen to do likewise.

13.1.8 If a Claim has not been resolved within fourteen (14) days after submission to the other party, the City shall have the right, at its sole discretion, to elect to pursue resolution of the Claim through mediation or arbitration. Should the City elect to pursue either mediation or arbitration, said alternative dispute resolution shall be conducted in general conformity with the applicable rules of the American Arbitration Association. Should the City elect not to pursue resolution of a claim through the foregoing process, the Claimant's exclusive remedy is to file suit in the Common Pleas Court of Franklin County, Ohio.

14 DEFAULT OF THE CONTRACTOR.

14.1 EVENTS OF DEFAULT. Each of the following constitutes an event of default of the Contractor:

14.1.1 The Contractor's failure to perform any of its obligations under the Contract Documents and to proceed to commence to correct such failure within forty-eight (48) hours after written notice thereof from the Owner or such lesser time as is provided in the Contract Documents, or

14.1.2 The Contractor's failure thereafter to use its best efforts to correct such failure, or

14.1.3 Except when an extension of time is granted in writing by the Owner, to correct such failure within thirty (30) days after receipt of written notice thereof.

14.1.4 The Contractor's failure to pay its obligations as they become due or the Contractor's insolvency.

14.2 OWNER'S REMEDIES. Upon the occurrence of an event of default the Owner shall have the following remedies, which shall be cumulative:

14.2.1 Order the Contractor to stop the Work, which the Contractor shall do immediately;

14.2.2 To perform through others all or any part of the Work remaining to be done and to deduct the cost thereof from the unpaid balance of the Contract Sum or, if the unpaid balance of the Contract Sum is inadequate, to demand reimbursement of amounts previously paid to the Contractor;

14.2.3 To terminate this Agreement and take possession of, for the purpose of completing the Work or any part of it, all materials, equipment, scaffolds, tools, appliances, and other items belonging to or possessed by the Contractor, all of which the Contractor hereby transfers and assigns to the Owner for such purpose, and to employ any person or persons to complete the Work, including the Contractor's employees, and the Contractor shall not be entitled to receive any further payment until the Work is completed; and/or,

14.2.4 All other remedies which the Owner may have at law or in equity or otherwise under the Contract Documents.

14.3 TERMINATION OF AGREEMENT. The termination of this Agreement shall be without prejudice to the Owner's rights and remedies, including without limitation the Owner's right to be indemnified by the Contractor.

14.4 PAYMENTS DUE CONTRACTOR. If the unpaid balance of the Contract Sum exceeds the cost of finishing the Project, including any costs, expenses or damages incurred by the Owner as a result of the event of default, including attorneys' and consultants' fees and the administrative expense of the Owner's staff, such excess shall be paid to the Contractor. If such costs exceed the unpaid balance, the Contractor shall pay the difference to the Owner. The obligations under this Paragraph shall survive the termination of this Agreement.

15 DEFAULT OF THE OWNER.

15.1 EVENTS OF DEFAULT. The following constitutes the exclusive events of default of the Owner:

15.1.1 The failure of the Owner to perform any of its obligations under the Contract Documents and to correct such failure within thirty (30) days after receipt of written notice thereof from the Contractor specifying the default and the necessary corrective action.

15.2 CONTRACTOR'S REMEDY.

15.2.1 The Contractor's sole and exclusive remedy for the default of the Owner, other than the failure of the Owner to pay the Contractor, will be to bring a suit for damages in the Common Pleas Court of Franklin County, Ohio. The Contractor's right to exercise that remedy shall be subject to its giving the Owner the required notices and following any other procedures required by the Contract Documents.

15.2.2 If the Owner fails to pay the Contractor as payment becomes due, the Contractor may, upon fifteen (15) days written Notice, stop the Work until payment of the amount owing has been received. An adjustment to the Contract Sum will be made as if the Work had been suspended for the convenience of the Owner under Section 16 of this Agreement.

16 SUSPENSION OR TERMINATION FOR THE CONVENIENCE OF THE OWNER.

16.1 SUSPENSION FOR THE CONVENIENCE OF THE OWNER.

16.1.1 The Owner may, without cause, order the Contractor to suspend, delay, or interrupt the Work in whole or in part for such period of time as the Owner may determine.

16.1.2 An adjustment shall be made for increases in the cost of performance of the Work, including profit and overhead on the increased cost of performance, caused by the suspension, delay or interruption, provided that the total cost of profit and overhead shall not exceed 10% of the amount of the increased cost not attributable to profit or overhead. No adjustment shall be made to the extent that: performance is, was or would have been so suspended, delayed or interrupted by another cause for which the Contractor is responsible; or an equitable adjustment is made or denied under another provision of this Agreement.

16.2 TERMINATION FOR THE CONVENIENCE OF THE OWNER.

16.2.1 The Owner may, in its discretion and without cause, by written notice to the Contractor terminate this Agreement for the Owner's convenience.

16.2.2 Upon receipt of a written notice from the Owner terminating this Agreement without cause and for the Owner's convenience, the Contractor shall (i) immediately cease performing the Work, unless otherwise directed by the Owner, in which case the Contractor shall take the action directed by the Owner, (ii) take all reasonable and necessary action to protect and preserve the Work, and (iii) unless otherwise directed by the Owner, terminate all agreements with Subcontractors and suppliers.

16.2.3 If this Agreement is terminated without cause and for the Owner's convenience and there exists no event of the Contractor's default, as defined in this Agreement, the Owner will pay the Contractor (i) for Work performed under this Agreement up to the date the notice of termination is received by the Contractor at the rates for Work performed under this Agreement, including overhead and profit of 10% on the Work performed up to the date of termination.

16.2.4 If this Agreement is terminated without cause for the Owner's convenience and there exists an event of the Contractor's default, as defined in this Agreement, the Contractor shall be entitled to receive only such sums as it would be entitled to receive following the occurrence of an event of default under this Agreement.

16.2.5 The termination of this Agreement shall be without prejudice to any rights or remedies that exist at the time of termination.

17 INSURANCE AND INDEMNIFICATION.

17.1 The Contractor shall maintain:

- Comprehensive general liability insurance in the amount of $1,000,000.00;
- Automobile liability insurance in the amount of $1,000,000.00;
- Workers compensation coverage as required by Ohio Law;

- Umbrella/Excess liability coverage in the amount of $2,000,000.00; and
- Installation floater for the Work in the amount of $N/A;
- Additionally, said policies of insurance shall name the Owner, its elected officials, officers, employees, agents and volunteers as additional insureds for incidents arising out of the Contract.

17.2 Insurance furnished by the Owner, if any, is not intended to and shall not cover equipment and materials before they are physically incorporated into the Work or tools. The Contractor shall bear the entire risk of loss with respect to tools, equipment, and materials.

17.3 To the maximum extent permitted by law, the Contractor shall indemnify and hold harmless the Owner and the Owner's consultants, agents, and employees from and against all claims, damages, losses, and expenses, including but not limited to attorneys' and consultants' fees—whether made by Owner or a third-party—arising out of or related to the Contractor's performance of the Work including but not limited to the failure of the Contractor to perform its obligations under the Contract Documents, any claims for bodily injury, sickness, disease, or death or to injury to or destruction of or loss of use of real or personal property, claims for additional storage and handling charges, liens against funds, claims related to the alleged failure of the Contractor to perform in accordance with the Contract Documents, and/or claims related to the removal, handling, or use of any hazardous materials. The Owner may set off amounts equal to any sums for which it is entitled to be indemnified from the amounts otherwise due the Contractor under the Contract Documents. It is agreed that the cost of the Owner's staff in calculating any expenses under this Paragraph shall be at the rate of $35.00 per hour.

18 WARRANTIES.

18.1 In addition to any other warranties, guarantees, or obligations set forth in the Contract Documents or applicable as a matter of law and not in limitation of the terms of the Contract Documents, the Contractor warrants and guarantees that:

- The Owner will have good title to the Work and all materials and equipment incorporated into the work will be new;
- The Work and all materials and equipment incorporated into the Work will be free from all defects, including any defects in workmanship or materials;
- The Work and all equipment incorporated into the Work will be fit for the purpose for which intended;
- The Work and all materials and equipment incorporated into the Work will be merchantable; and,
- The Work and all materials and equipment incorporated into the Work will conform in all respects to the Contract Documents.

18.2 Upon notice of the breach of any of the foregoing warranties or guarantees or any other warranties or guarantees under the Contract Documents, the Contractor, in addition to any other requirements in the Contract Documents, shall commence to correct such breach and all damage resulting therefrom within forty-eight (48) hours after written notice thereof, thereafter shall use its best efforts to correct such breach and damage to the satisfaction of the Owner and, except when an extension of time is granted in writing by the Owner, correct such breach and damage to

the satisfaction of the Owner within thirty (30) days of such notice; provided that if such notice is given after final payment hereunder, such 48-hour period shall be extended to seven (7) calendar days. If the Contractor fails to commence to correct such breach and damage, or to correct such breach and damage as provided above, the Owner, upon written notice to the Contractor and without prejudice to any of its other rights or remedies, may correct the deficiencies. The Contractor upon written notice from the Owner shall pay the Owner, within ten (10) days after the date of such notice, all of the Owner's costs and expenses incurred in connection with or related to such correction and/or breach, including without limitation the Owner's administrative, legal, and consulting expenses. The foregoing warranties and obligations of the Contractor shall survive the final payment and/or termination of this Agreement. If the Contractor fails to pay the Owner any amounts due under this Paragraph, the Contractor shall pay the Owner, in addition to the amounts due, a late payment fee of one and one-half percent (1.5%) per month for each month or part thereof that the payments are not paid when due.

19 GENERAL.

19.1 MODIFICATION. No modification or waiver of any of the terms of this Agreement or of any other Contract Documents shall be effective against a party unless set forth in writing and signed by or on behalf of a party, which in the case of the Owner shall require the signature of the Owner's Representative acting under the authority of a specific resolution of the Owner. Under no circumstances shall forbearance, including the failure or repeated failure to insist upon compliance with the terms of the Contract Documents, constitute the waiver or modification of any such terms. The parties acknowledge that no person has authority to modify this Agreement or the other Contract Documents or to waive any of its or their terms, except as expressly provided in this Paragraph.

19.2 ASSIGNMENT. The Contractor may not assign this Agreement without the written consent of the Owner, which the Owner may withhold in its sole discretion.

19.3 THIRD PARTIES. Nothing contained in this Agreement shall create a contractual relationship with or a cause of action in favor of a third party against either the Owner or the Contractor.

19.4 LAW AND JURISDICTION. All questions regarding the validity, intention, or meaning of this Agreement or any modifications of it relating to the rights and obligations of the parties shall be construed and resolved under the laws of the State of Ohio. Any suit, which may be brought to enforce any provision of this Agreement or any remedy with respect hereto, shall be brought in the Common Pleas Court of Franklin County, Ohio, and each party hereby expressly consents to the jurisdiction of such court.

19.5 STATUTE OF LIMITATIONS. Regardless of any provision to the contrary, the statute of limitations with respect to any defective or non-conforming Work that is not discovered by the Owner shall not commence until the discovery of such defective or non-conforming Work by the Owner.

19.6 NOTICES. Notices, requests, or demands by either party shall be in writing, unless otherwise expressly authorized, and shall be personally served, forwarded by expedited messenger service, sent by facsimile transmission, or be given by registered or certified mail, return receipt requested, postage prepaid, and, in the case of the Owner, addressed to the address/FAX number set forth at the beginning of this Agreement marked "Urgent, deliver to Owner's Representative/Designee," and, in the case of the Contractor, addressed to its address/FAX number

set forth at the beginning of this Agreement. Any party may change its address/FAX number by giving notice hereunder. All notices, requests, and demands shall be deemed received upon receipt in the case of personal delivery or delivery by expedited messenger service, including leaving the notice at the address provided herein during normal business hours; upon the expiration of forty-eight (48) hours from the time of deposit in the United States mail; or, in the case of a notice given by facsimile transmission, upon the expiration of twenty-four (24) hours after the transmission is sent.

19.7 CONSTRUCTION. The parties acknowledge that each party has reviewed this Agreement and the other Contract Documents and has voluntarily entered into this Agreement. Accordingly, the normal rule of construction to the effect that any ambiguities are to be resolved against the drafting party shall not be employed in the interpretation of this Agreement, the other Contract Documents, or any amendments or exhibits to it or them.

19.8 APPROVALS. Except as expressly provided herein, the approvals and determinations of the Owner shall be subject to the sole discretion of the Owner and will be valid and binding on the Contractor, provided only that they be made in good faith, i.e., honestly. If the Contractor challenges any such approval or determination, the Contractor shall have the burden of proving by clear and convincing evidence that it was not made in good faith.

19.9 PARTIAL INVALIDITY. If any term or provision of this Agreement is found to be illegal, unenforceable, or in violation of any laws, statutes, ordinances, or regulations of any public authority having jurisdiction, then, notwithstanding such term or provision, this Agreement shall remain in full force and effect, and such term shall be deemed stricken; provided this Agreement shall be interpreted, when possible, so as to reflect the intentions of the parties as indicated by any such stricken term or provision.

19.10 COMPLIANCE WITH LAWS AND REGULATIONS. The Contractor, at its expense, shall comply with all applicable federal, state, and local laws, rules, and regulations applicable to the Work. Including, but not limited to Ohio's Prevailing Wage law if applicable.

19.11 PROJECT SAFETY. The Contractor shall follow all applicable safety and health regulations during the progress of the Project and shall monitor all of its employees and its subcontractors for compliance with such safety and health regulations. In undertaking the responsibilities set forth in this Paragraph, the Contractor does not assume any duty or responsibility to the employees of any Subcontractor or supplier, regardless of tier. The Owner assumes no responsibility for the development, review, or implementation of any project safety plan or for Project safety and has no authority to direct the means and methods of the Contractor.

19.12 EQUAL OPPORTUNITY. Contractor agrees that, in the hiring of employees for the performance of work under the Contract or any subcontract, no contractor, subcontractor, or any person acting on a contractor's or subcontractor's behalf, by reason of race, creed, sex, disability or military status as defined in section 4112.01 of the Revised Code, or color, shall discriminate against any citizen of the state in the employment of labor or workers who is qualified and available to perform the work to which the employment relates. Contractor further agrees that neither it, its subcontractors, or any person on the Contractor's or subcontractor's behalf, in any manner, shall discriminate against or intimidate any employee hired for the performance of work under the contract on account of race, creed, sex, disability or military status as defined in section 4112.01 of the Revised Code, or color. That there shall be deducted from the amount payable to the Contractor by the Owner under this Agreement a forfeiture of twenty-five dollars ($25.00) as required by O.R.C. Section 153.60 for each person who is discriminated against or intimidated in violation of this

Agreement. That this Agreement may be canceled or terminated by the Owner and all money to become due hereunder may be forfeited for a second or subsequent violation of the terms of this section of this Agreement.

19.13 USE OF OWNER'S FACILITIES. The Contractor shall ensure that neither its employees, nor its Subcontractor's or material supplier's employees, regardless of tier, do any of the following without the express prior written consent of the Owner: use the Owner's cafeteria, rest rooms, or phones; use or bring any alcoholic beverages, controlled substances, or firearms on any property owned by the Owner. The Owner will not tolerate any such actions and any such action observed or made known to the Owner shall be dealt with severely.

19.14 ETHICS. By signing and entering into this agreement with the Owner, the Contractor represents that it is familiar with all applicable ethics law requirements, including without limitation Sections 102.04 and 3517.13 of the O.R.C., and certifies that it is in compliance with such requirements. The Contractor understands that failure to comply with the ethics laws is, in itself, grounds for termination of this contract and may result in the loss of other contracts with the Owner.

19.15 PROPERTY TAX AFFIDAVIT. The Contractor's affidavit given under ORC Section 5719.024 is incorporated herein.

19.16 ENTIRE AGREEMENT. This Agreement and the other Contract Documents constitute the entire agreement among the parties with respect to their subject matter and will supersede all prior and contemporaneous, oral or written, agreements, negotiations, communications, representations, and understandings with respect to such subject matter, and no person is justified in relying on such agreements, negotiations, communications, representations, or understandings.

CITY OF DUBLIN, OHIO

By: _____ By: _____

Its: _____ Its: _____

Date: _____ Date: _____

APPROVED AS TO FORM:

_____ Date: _____

Stephen J. Smith, Esq., Law Director

CERTIFICATE OF AVAILABILITY OF FUNDS

I Angel Mumma, hereby certify that I am the fiscal officer for the CITY OF DUBLIN, OHIO and that the amount of money to wit $ required to meet the cost of the attached Contract between the City and has been or will be, before the ordering of any materials, lawfully appropriated for the purpose of said Contract and the money so appropriated is on deposit or in process of collection to the credit of the appropriate fund free from any previous encumbrances. Moneys due in excess of the Contract Sum and any Contingency amount assigned thereto shall require an additional and separate Fiscal Officer's Statement of Availability which shall not be given unless the Contract adjustment is directly attributable to one of the express methods for increasing the Contract Sum under the Contract Documents; and, such process is completed in the manner required by the Contract Documents.

_____ _____

Date Angel Mumma, Finance Director

B. CITY OF DUBLIN GENERAL CONDITIONS DIVISION 100

City of Dublin Division of Engineering General Condition Division 100 can always be found at:

http://dublinohiousa.gov/dev/dev/wp-content/uploads/2013/02/City-of-Dublin-General-Conditions-Section-100.pdf

If you purchase a hard copy of the project documents the General Condition Division 100 will be on the CD included in the Bid Document. The General Condition Division 100 will also be posted with the project on the City of Dublin's website where the project documents are available for download.

C. SUPPLEMENTAL GENERAL CONDITIONS

THERE ARE NO SUPPLEMENTAL GENERAL CONDITIONS FOR THE JOHN SHIELDS PARKWAY – PHASE 1 PROJECT.

D. SUPPLEMENTAL SPECIFICATIONS

CONTRACT SPECIFICATIONS

All contract specifications in this section are to be considered a part thereof.

WORK SCHEDULE

The contractor shall schedule his work accordingly to in order to achieve and "open for traffic date" of no later than November 21, 2014. Specifically, the final course of asphalt, brick, and final pavement markings shall be in place. Work may continue on items located outside of the travel lane (Typical 1-4) and parking lane (Typical 3 -4) as indicated on Sheet 4 – Typical Sections and but must be completed no later than April 24, 2015.

COORDINATING WITH UTILITIES

It is the Contractor's responsibility to coordinate their work with the private utilities as required. The utility owner may be required to brace, temporarily support, or relocate their respective utilities so that the proposed improvements can be constructed.

MAINTENANCE OF TRAFFIC

MOT shall follow the construction drawings unless otherwise approved by the City Engineer.

The need for the lane encroachments on Tuller Ridge Drive shall not occur without 72 hour notice to the City of Dublin. Coordination with required lane closures on Tuller Ridge Drive as part of 14-015-CIP – Dale Drive - Tuller Ridge Drive Temporary Connector may be required.

WORKING HOURS

The Contractor is permitted to work between 7:00 A.M. and 9:00 P.M., Monday through Saturday. Permission to work on Sunday and holidays must be requested in writing and approved by the City Engineer.

STAGING AREA

The Contractor may use as a staging area the City owned property at 4500 Tuller Ridge Drive, Sycamore Ridge Park. Work shall be limited to the first 250 feet from Tuller Ridge Drive. All areas disturbed shall be fully restored to their original condition or better to the satisfaction of the City of Dublin. The Contractor shall perform all restoration at his expense. The Contractor shall not stage equipment or materials on lands adjacent to the City owned property if outside the work limits.

GEOTECHNICAL INFORMATION

The subsurface exploration report for adjacent projects is included in the bid documents. Dublin does not guarantee that the conditions outlined in the report are representative of the conditions of this project.

TEST HOLES

The Contractor is encouraged to dig test holes at the project site prior to making their bid to familiarize themselves with site subsurface conditions. The bidder shall take into account any difficulty they perceive in constructing the project due to rock, ground water, weak soils, topsoil, etc.

INSPECTION

All inspections shall be provided by the City.

COORDINATION

Contractor shall coordinate his work to facilitate work by utilities in the right-of-way and outside of the construction work limits.

Coordination with the City and its contractor for 14-014-CIP shall be required to facilitate the maintenance of traffic plan as set forth in both this project and 14-015-CIP.

PROPOSAL

No extra compensation will be paid to the Contractor by reason of compliance with any of the requirements indicated in the Specifications. Payment shall be deemed to be included among the several items, as bid upon, unless otherwise specifically provided.

CONSTRUCTION LAYOUT

All construction layout stakes for this project shall be provided by the Contractor. All work shall be performed by and under the guidance of an Ohio Professional Surveyor.

ITEM 203 – EXCAVATION
ITEM 203 – EMBANKMENT

All excavation shall be considered as unclassified, including rock.

DEWATERING

The cost of any dewatering operations required for the construction of the storm sewers, culverts, underground ducts and/or conduits shall be included in the price bid for the various items.

CONDUIT END TREATMENT

Immediately after placement of any conduits, the Contractor shall construct the end treatments required by the plans at both the outlet and inlet ends. This shall include headwalls, flared-end sections, rip-rap, rock channel protection, seeding, etc.

STORM SEWER WITH TYPE 1 BEDDING (706.02)

All storm sewer conduits shall meet the requirements of ASTM C-76, Class III or stronger.

MANHOLES, CATCH BASINS AND INLETS

The contractor will make all final grade adjustments of manhole, catch basin and inlet covers and frame assemblies using injection molded high density polyethylene (HDPE) adjustment rings where practical. These adjustment rings shall be manufactured from polyethylene plastic as indentified in ASTM Designation D-1248 (Standard Specification for Polyethylene Plastic Molding and Extrusion Materials). Installation shall be per manufacture's recommendations only. The annular space between the rings and cone basin, the rings, and the rings and cover frame shall be sealed utilizing an approved butyl sealant.

STORAGE OF EQUIPMENT AND MATERIALS

No materials, including pipe, shall be stored within twenty (20) feet of any intersecting street or driveway. During non-working hours, storage of equipment shall comply with these same requirements and shall not in any way relieve the Contractor of their legal responsibilities or liabilities for the safety of the public.

CONSTRUCTION MATERIALS

No alternates or deviations shall be permitted from those construction materials shown on the plans. Bidders shall not submit alternates with their bid.

SURVEY MONUMENTATION

The contractor shall carefully preserve bench marks, property corners, reference points, stakes and other survey reference monuments or markers. In cases of willful or careless destruction, the contractor shall be responsible. Resetting of markers shall be performed by an Ohio Professional Surveyor as approved by the City Engineer at the contractor's expense.

CONSTRUCTION NOISE

Any device shall not be operated at any time in such a manner that the noise created substantially exceeds the noise customarily and necessarily attendant to the reasonable and efficient performance of such equipment.

TRAFFIC CONTROL

Permanent signing shall be non-performed. The City will fabricate and install all permanent traffic control signs. Maintenance of Traffic signing shall be performed by the Contractor with the Maintenance of Traffic.

CPM SCHEDULING

Critical Path Method (CPM) Schedule (Type B) is included in the bid documents. Contractor shall also be required to supply schedule in Primavera 6.0 and coordinate with the City and its third party inspector. Meetings will be coordinated with established project meetings. A pay item for Type B – CPM Schedule has been included.

E. GEOTECHNICAL SPECIFICATIONS

Geotechnical Engineering Report

Assisted Living and Skilled Nursing Building
Vrable Healthcare Center
Dublin, Ohio

January 14, 2013
Terracon Project No. N4125218

Prepared for:
Vrable Land Holding Massilon, LLC
c/o: JMM Architects, Inc.
Columbus, Ohio

Prepared by:
Terracon Consultants, Inc.
Columbus, Ohio

Offices Nationwide
Employee-Owned
Established in 1965
terracon.com

Terracon

Geotechnical ■ Environmental ■ Construction Materials ■ Facilities

City of Dublin
OHIO, USA
Approved for Construction
BCS-2013-00400040
04/12/13

Terracon

January 14, 2013

Vrable Land Holding Massilon, LLC
c/o: JMM Architects, Inc.
4685 Larwell Drive
Columbus, Ohio 43220

Attn: Mr. James Churski
P: [614] 326 5565
F: [614] 326 5566
E: james@jmmarch.com

Re: Geotechnical Engineering Report
Assisted Living and Skilled Nursing Building
Vrable Healthcare Center
Dublin, Ohio
Terracon Project Number: N4125218

Dear Mr. Churski:

Terracon Consultants, Inc. (Terracon) has completed the geotechnical engineering services for the above referenced project. This study was performed in general accordance with our proposal number PN4120581 dated October 25, 2012 and our agreement for services of December 11, 2012. This report presents the findings of the subsurface exploration and provides geotechnical recommendations regarding the design and construction of foundations, floor slabs, and pavements for the proposed development.

We appreciate the opportunity to be of service to you on this project. If you have any questions concerning this report, or if we may be of further service, please contact us.

Sincerely,
Terracon Consultants, Inc.

FOR

Alma K. Baratta, E.I.
Senior Staff Engineer

Kevin M. Ernst, P.E.
Geotechnical Department Manager

City of Dublin
OHIO, USA
Approved for Construction
BP13-00400040
04/12/13

TABLE OF CONTENTS

Page

EXECUTIVE SUMMARY ..... **i**

1.0 INTRODUCTION **1**

2.0 PROJECT INFORMATION **1**

2.1 Project Description 1

2.2 Site Location and Description 2

3.0 SUBSURFACE CONDITIONS **2**

3.1 Typical Profile 2

3.2 Water Level Observations 3

4.0 RECOMMENDATIONS FOR DESIGN AND CONSTRUCTION **5**

4.1 Geotechnical Considerations 5

4.2 Earthwork 6

4.2.1 Initial Site Grading and Preparation 7

4.2.2 Structural Fill Requirements 8

4.2.3 Structural Fill Placement and Compaction Requirements 9

4.2.4 Utility Trench Backfill 9

4.2.5 Grading and Drainage 10

4.2.6 Earthwork Construction Considerations 10

4.3 Foundations 11

4.3.1 Foundation Design Recommendations 12

4.3.2 Foundation Construction Considerations 12

4.4 Seismic Considerations 14

4.5 Floor Slab 14

4.5.1 Design Recommendations 14

4.5.2 Floor Slab Construction Considerations 15

4.6 Pavements 15

4.6.1 Subgrade Preparation 15

4.6.2 Design Considerations 16

4.6.3 Pavement Drainage 17

4.6.4 Pavement Maintenance 17

4.7 Lateral Earth Pressures 18

5.0 GENERAL COMMENTS **19**

APPENDIX A – FIELD EXPLORATION

Field Exploration Description ..... Exhibit A-1

Site Location Map ..... Exhibit A-2

Boring Location Plan ..... Exhibit A-3

Boring Logs ..... Exhibit A-3 to A-18

APPENDIX B – LABORATORY TESTING

Laboratory Testing ..... Exhibit B-1

Laboratory Test Results ..... Exhibit B-2 to B-4

City of Dublin OHIO, USA

Approved for Construction
BP13-00400040
04/12/13

APPENDIX C – SUPPORTING DOCUMENTS

General Notes ..... Exhibit C-1
Unified Soil Classification System ..... Exhibit C-2
Description of Rock Properties ..... Exhibit C-3

City of Dublin
OHIO, USA
Approved for Construction
BP13-00400040
04/12/13

EXECUTIVE SUMMARY

Terracon Consultants, Inc. has completed a geotechnical exploration for the proposed Assisted Living and Skilled Nursing Building – Vrable Healthcare Center to be located near the southwest corner of Tuller Road and Tuller Ridge Drive in Dublin, Ohio. Fifteen (15) borings, designated B-1 through B-12 and P-1 through P-3, were performed to depths ranging from approximately 8.7 to 20 feet below the existing ground surface in the proposed building and pavement areas.

Based on the information obtained from our subsurface exploration, the site can be developed for the proposed project. The following geotechnical considerations were identified:

- The recently completed test borings indicated the presence of fill consisting of cohesive and granular soils with loose relative density (granular soils) or soft to stiff consistency (cohesive soils) to a depth of approximately 0.8 to 8 feet below existing grade. The fill exhibited variable consistency and relative density and contained varying amounts of organics, glass, aluminum, brick, and concrete fragments. Beneath the fill, native cohesive soils with medium stiff to very stiff consistency, and native non-cohesive fine-grained and granular soils with medium dense to very dense relative density were encountered to a depth of about 9 to 18.6 feet beneath existing grades, underlain by limestone bedrock with hard hardness to the termination depth of the borings.

- Based on the borings, the fill is not suitable for direct support of building foundations and slab-on-grade floors due to the potential for excessive total and differential settlement response. The proposed building structure can be supported on shallow spread footings. However, the shallow foundation excavations should extend through the existing fill and bear on the underlying native cohesive soils of at least medium stiff consistency, native non-cohesive fine-grained soils or native granular soils of at least medium dense relative density, bedrock, or on structural fill or lean concrete that extends to acceptable bearing materials. Existing fill should also be completely removed to expose the native soil subgrade in areas receiving new structural fill placement.

- To provide for suitable subgrades for floor slab and pavement support, we recommend that a complete undercut and replacement of the existing fill be undertaken in areas where the fill is exposed at the floor slab design subgrade level, and a partial undercut and replacement of the existing fill be undertaken in areas where the fill is exposed at the pavement design subgrade level. The undercut in pavement areas should extend to a depth of at least 3 feet below the design subgrade elevation in drive and parking areas. Fill was encountered in Borings B-2, B-6, and B-7. As discussed below, the upper 18 inches should consist of Low Volume Change Material conforming to the requirements in section **4.2.2 Structural Fill Material Requirements**.

City of Dublin
OHIO, USA
Approved for Construction
BP13-00400040
04/12/13

- Support of pavements on or above existing fill soils is discussed in this report. However, even with the recommended construction testing, there is a risk that unsuitable materials within or buried by the fill will not be discovered. This risk cannot be eliminated without removing the fill, but can be reduced by thorough exploration and testing during construction.

- The near surface native cohesive soils contained moderately to highly plastic soils. Due to the potential for shrink-swell action, these soils are not suitable for direct floor slab support. As such, in this report we provide recommendations for developing a subgrade suitable for floor slab support by providing a minimum 18 inch thick layer of structural fill constructed of Low Volume Change Material below the aggregate base of the new floor slab. Requirements for Low Volume Change Material are provided in section **4.2.2 Structural Fill Material Requirements** and details for floor slab subgrade preparation are provided in section **4.5 Floor Slab**.

- Soils prone to shrink/swell characteristics are present on this site. This report provides recommendations to help mitigate the effects of soil shrinkage and swell. However, even if these procedures are followed, some movement and cracking in the structure should be anticipated. The severity of cracking and other damage such as uneven floor slabs will probably increase if any modification of the site results in excessive wetting or drying of the shrink/swell prone soils. Eliminating the risk of movement and distress may not be feasible, but it may be possible to further reduce the risk of movement if significantly more expensive measures are used during construction. We would be pleased to discuss other construction alternatives with you upon request.

- It is anticipated the decomposed, severely weathered bedrock can be mechanically ripped. Deeper excavation into the bedrock will require the use of heavy-duty excavation equipment. Drilling and blasting will be required to facilitate rock break-up and removal may also be required in deeper, more competent rock. Jack-hammering may be required in utility excavations where working space will be limited. Consideration should be given to the location and invert elevations of utilities planned for the project to reduce the impacts of difficult excavation. Final elevations should be chosen to reduce the amount of potential bedrock excavation.

- The borings were observed while drilling and immediately after completion for the presence and level of groundwater. Groundwater was not encountered in any of the borings for the short duration the boreholes were allowed to remain open. Based on our short-term observations, seepage into shallow excavations is not anticipated at this site. However, groundwater levels fluctuate over time and should be evaluated at the time of construction. The contractor is responsible for employing appropriate dewatering methods to control seepage and facilitate construction.

City of Dublin
OHIO, USA
Approved for Construction
BP13-00400040
04/12/13

This summary should be used in conjunction with the entire report for design purposes. It should be recognized that details were not included or fully developed in this section, and the report must be read in its entirety for a comprehensive understanding of the items contained herein. Section **5.0 GENERAL COMMENTS** should be read for an understanding of the report limitations.

City of Dublin
OHIO, USA
Approved for Construction
BP13-00400040
04/12/13

GEOTECHNICAL ENGINEERING REPORT
ASSISTED LIVING AND SKILLED NURSING BUILDING
VRABLE HEALTHCARE CENTER
DUBLIN, OHIO

Terracon Project No. N4125218
January 14, 2013

1.0 INTRODUCTION

Terracon Consultants, Inc. has completed a geotechnical exploration for the proposed Assisted Living and Skilled Nursing Building – Vrable Healthcare Center to be located near the southwest corner of Tuller Road and Tuller Ridge Drive in Dublin, Ohio. Fifteen (15) borings, designated B-1 through B-12 and P-1 through P-3, were performed to depths ranging from approximately 8.7 to 20 feet below the existing ground surface in the proposed building and pavement areas. Logs of the borings and a boring location plan are included in Appendix A of this report.

The purpose of these services is to provide information and geotechnical engineering recommendations relative to:

- subsurface soil conditions
- groundwater conditions
- earthwork
- pavement design and construction
- foundation design and construction
- floor slab design and construction
- seismic considerations

2.0 PROJECT INFORMATION

2.1 Project Description

Item	Description
Site layout	See Appendix A, Exhibit A-3: Boring Location Plan
Structures	The proposed facility will include the following: ▪ A central area with structural steel framing, EPDM roof, and aluminum curtail wall glazing system. ▪ Two 1-story slab-on-grade nursing wings with wood stud/wood truss construction ▪ One 2-story nursing wing with slab-on-grade and precast concrete plank floors, concrete masonry bearing walls, metal stud walls, and roof trusses. ▪ One 2-story assisted living wing with slab-on-grade and

City of Dublin
OHIO, USA
Approved for Construction
BP13-00400040
04/12/13

Item	Description
	precast concrete plank floors, concrete masonry bearing walls, metal stud walls, and wood roof trusses.
Finished floor elevation	The first floor finished floor elevation is planned to be at elevation 842 feet; the lower level floor will be at elevation 830 feet.
Maximum loads	Structural loading has not been provided.
Grading	The site grading scheme is anticipated to consist of up to 5 feet of cut and 9 feet of fill.
Pavements	New parking lot and drive areas are planned to the north, west, and south of the facility.

2.2 Site Location and Description

Item	Description
Location	This project will be located near the southwest corner of the intersection of Tuller Road and Tuller Ridge Drive in Dublin, Ohio.
Existing improvements	Vacant lot.
Current ground cover	Grass, underbrush, and some mature tree growth.
Existing topography	Provided topographic survey information indicates the site generally slopes downward towards the west, ranging from approximately elevation 845 feet near the northeast portion to 815 feet near the southwest corner of the site.

3.0 SUBSURFACE CONDITIONS

3.1 Typical Profile

Based on the results of the borings, subsurface conditions on the project site can be generalized as follows:

Description	Approximate Depth to Bottom of Stratum (feet)	Material Encountered	Consistency/Density/ Hardness
Surface	2 to 10 inches	Topsoil	N/A

City of Dublin
OHIO, USA
Approved for Construction
BP13-00400040
04/12/13

Description	Approximate Depth to Bottom of Stratum (feet)	Material Encountered	Consistency/Density/ Hardness
Fill	0.8 to 8 (Borings B-2, B-6, and B-7 only)	Fill consisting of cohesive soils: sandy lean clay and lean clay containing varying amounts of organics, glass, brick, and aluminum fragments Fill consisting of granular soils: silty gravel and clayey gravel containing varying amounts of organics, concrete, and brick fragments	Clay: soft to stiff Gravel: loose
Native fine-grained and granular soils	3 to 13.2 (Boring B-9 terminates in this layer)	Native cohesive fine-grained soils: sandy lean clay, lean clay, and fat clay Native non-cohesive fine-grained soils: sandy silt Native granular soils: clayey sand	Sand and silt: medium dense Clay: medium stiff to very stiff
Native granular soils (severely to completely weathered bedrock)	9 to greater than 18.6 feet (Borings B-1, B-3, B-4, B-6, B-7, B-10, P-1, P-2, and P-3 terminate in this layer)	Native granular soils: silty sand, silty gravel, clayey gravel, and poorly graded gravel containing varying amounts of sand, gravel, boulders, and limestone layers	Gravel and sand: medium dense to very dense
Bedrock	Greater than 20 feet – Borings B-2, B-5, and B-8 terminate in this layer at 20 feet	Limestone bedrock	Hard (rock hardness)

Conditions encountered at each boring location are indicated on the individual boring logs. Stratification boundaries on the boring logs represent the approximate location of changes in soil types; in situ, the transition between materials may be gradual.

3.2 Water Level Observations

The borings were observed while drilling and immediately after completion for the presence and level of groundwater. The subsurface water levels observed at these times are indicated on the boring logs in Appendix A and are summarized in the following table.

City of Dublin
OHIO, USA
Approved for Construction
BP13-00400040
04/12/13

Boring Number	Observed Water Depth (feet)[1]	
	While Drilling	After Drilling
B-1	N/E	N/E (DCI at 15)
B-2	5.5	5 (WCI at 8)
B-3	N/E	N/E (DCI at 10)
B-4	N/E	N/E (DCI at 14.5)
B-5	N/E	N/E (WCI at 9)
B-6	N/E	N/E (DCI at 6)
B-7	N/E	N/E (DCI at 7)
B-8	N/E	11 (WCI at 13)
B-9	N/E	N/E (DCI at 10.5)
B-10	N/E	N/E (DCI at 8)
P-1	N/E	N/E (DCI at 5)
P-2	N/E	N/E (DCI at 9)
P-3	N/E	N/E (DCI at 6)

[1] Below existing grade
N/E – Not Encountered
DCI – Dry cave-in condition noted at listed depth after auger casing removed
WCI – Wet cave-in condition noted at listed depth after auger casing removed

The boreholes were observed while drilling and after completion for the presence and level of groundwater. Groundwater was encountered in Borings B-2 and B-8 at depths of about 5 to 11 feet below existing grade. Groundwater was not encountered in the remainder of the borings for the short duration the boreholes were allowed to remain open. Based on our short-term observations, seepage into shallow excavations does not appear to be a significant issue at this site.

Groundwater level fluctuations occur due to seasonal variations in the amount of rainfall, runoff and other factors not evident at the time the borings were performed. In addition, perched or trapped water can develop over low permeability soils or within existing fill materials. Therefore, groundwater levels during construction or at other times in the life of the structure may be higher or lower than the levels indicated on the boring logs. The possibility of groundwater level fluctuations should be considered when developing the design and construction plans for the project.

City of Dublin
OHIO, USA
Approved for Construction
BP13-00400040
04/12/13

4.0 RECOMMENDATIONS FOR DESIGN AND CONSTRUCTION

4.1 Geotechnical Considerations

The recently completed test borings indicated the presence of fill consisting of cohesive and granular soils with loose relative density (granular soils) or soft to stiff consistency (cohesive soils) to a depth of approximately 0.8 to 8 feet below existing grade. The fill exhibited variable consistency and relative density and contained varying amounts of organics, glass, aluminum, brick, and concrete fragments. Beneath the fill, native cohesive soils with medium stiff to very stiff consistency, and native non-cohesive fine-grained and granular soils with medium dense to very dense relative density were encountered to a depth of about 9 to 18.6 feet beneath existing grades, underlain by limestone bedrock with hard hardness to the termination depth of the borings.

Based on the borings, the fill is not suitable for direct support of building foundations and slab-on-grade floors due to the potential for excessive total and differential settlement response. The proposed building structure can be supported on shallow spread footings. However, the shallow foundation excavations should extend through the existing fill and bear on the underlying native cohesive soils of at least medium stiff consistency, native non-cohesive fine-grained soils or native granular soils of at least medium dense relative density, bedrock, or on structural fill or lean concrete that extends to acceptable bearing materials. Existing fill should also be completely removed to expose the native soil subgrade in areas receiving new structural fill placement.

To provide for suitable subgrades for floor slab and pavement support, we recommend that a complete undercut and replacement of the existing fill be undertaken in areas where the fill is exposed at the floor slab design subgrade level, and a partial undercut and replacement of the existing fill be undertaken in areas where the fill is exposed at the pavement design subgrade level. The undercut in pavement areas should extend to a depth of at least 3 feet below the design subgrade elevation in drive and parking areas. Fill was encountered in Borings B-2, B-6, and B-7. As discussed below, the upper 18 inches should consist of Low Volume Change Material conforming to the requirements in section **4.2.2 Structural Fill Material Requirements**.

Support of pavements on or above existing fill soils is discussed in this report. However, even with the recommended construction testing, there is a risk that unsuitable materials within or buried by the fill will not be discovered. This risk cannot be eliminated without removing the fill, but can be reduced by thorough exploration and testing during construction.

The near surface native cohesive soils contained moderately to highly plastic soils. Due to the potential for shrink-swell action, these soils are not suitable for direct floor slab support. A

City of Dublin
OHIO, USA
Approved for Construction
BP13-00400040
04/12/13

such, in this report we provide recommendations for developing a subgrade suitable for floor slab support by providing a minimum 18 inch thick layer of structural fill constructed of Low Volume Change Material below the aggregate base of the new floor slab. Requirements for Low Volume Change Material are provided in section **4.2.2 Structural Fill Material Requirements** and details for floor slab subgrade preparation are provided in section **4.5 Floor Slab**.

Soils prone to shrink/swell characteristics are present on this site. This report provides recommendations to help mitigate the effects of soil shrinkage and swell. However, even if these procedures are followed, some movement and cracking in the structure should be anticipated. The severity of cracking and other damage such as uneven floor slabs will probably increase if any modification of the site results in excessive wetting or drying of the shrink/swell prone soils. Eliminating the risk of movement and distress may not be feasible, but it may be possible to further reduce the risk of movement if significantly more expensive measures are used during construction. We would be pleased to discuss other construction alternatives with you upon request.

It is anticipated the decomposed, severely weathered bedrock can be mechanically ripped. Deeper excavation into the bedrock will require the use of heavy-duty excavation equipment. Drilling and blasting will be required to facilitate rock break-up and removal may also be required in deeper, more competent rock. Jack-hammering may be required in utility excavations where working space will be limited. Consideration should be given to the location and invert elevations of utilities planned for the project to reduce the impacts of difficult excavation. Final elevations should be chosen to reduce the amount of potential bedrock excavation.

The borings were observed while drilling and immediately after completion for the presence and level of groundwater. Groundwater was not encountered in any of the borings for the short duration the boreholes were allowed to remain open. Based on our short-term observations, seepage into shallow excavations is not anticipated at this site. However, groundwater levels fluctuate over time and should be evaluated at the time of construction. The contractor is responsible for employing appropriate dewatering methods to control seepage and facilitate construction.

Our geotechnical recommendations are presented in the sections that follow.

4.2 Earthwork

Provided topographic survey information indicates the existing ground surface generally slopes downward towards the west, ranging from approximately elevation 845 feet near the northeast portion to 815 feet near the southwest corner of the site. Based on preliminary information, it appears up to 5 feet of cut and 9 feet of fill would need to be performed to establish the proposed finished grades.

City of Dublin
OHIO, USA
Approved for Construction
BP13-00400040
04/12/13

4.2.1 Initial Site Grading and Preparation

As an initial measure of site preparation, any topsoil, vegetation, or other surficial deleterious material (e.g. debris, desiccated soil, frozen soil, etc.) should be completely stripped to expose the underlying soil subgrade in areas that will receive fill or support buildings and pavements. The required depth of removal should be determined in the field by a representative of the geotechnical engineer.

Removal and/or relocation of any "to be abandoned" utilities, as well as installation of new underground utilities, should be performed once the topsoil and any deleterious material is removed. Any abandoned underground pipes left in place should be fully grouted. Excavations created due to utility relocations should be backfilled with granular structural fill material, placed and compacted in accordance with the recommendations provided in the following paragraphs, or with lean concrete or flowable fill. If lean concrete is used as backfill, the contractor should refer to all of the new build Mechanical-Electrical-Plumbing (MEP) and foundation drawings to confirm that the concrete backfill materials will not conflict with any new item installations or construction.

To provide for suitable subgrades for floor slab and pavement support, we recommend that a complete undercut and replacement of the existing fill be undertaken in areas where the fill is exposed at the floor slab design subgrade level, and a partial undercut and replacement of the existing fill be undertaken in areas where the fill is exposed at the pavement design subgrade level. The undercut in pavement areas should extend to a depth of at least 3 feet below the design subgrade elevation in drive and parking areas.

Additionally, existing fill in areas of to receive new structural fill should be completely removed to expose native soil suitable for placement of new structural fill.

After performing the initial site preparation activities and performing the recommended undercut, the exposed soils within the limits of the proposed building and pavement areas should be proofrolled in the presence of a representative of the geotechnical engineer. The exposed cohesive soils should be proofrolled with a fully loaded, tandem axle dump truck or other suitable equipment weighing at least 20 tons. Granular soils, where encountered, should be proofrolled with several passes of a vibratory roller (minimum dead weight of 8 tons on the drum).

Any soft, loose or yielding areas encountered during proofrolling operations should be undercut to expose firm stable soils or reworked in place to a stable acceptable condition. It should be noted that undercut depths somewhat greater than normal may be needed if the construction occurs during periods of inclement weather. The actual amount of undercut would need to be determined in the field during construction and is dependent on weather conditions and equipment used in the construction.

City of Dublin
OHIO, USA
Approved for Construction
BP13-00400040
04/12/13

The rough soil subgrade elevation should be established with quality controlled cohesive or granular fill placed and compacted in accordance with requirements provided in section **4.2.2 Structural Fill Material Requirements** and section **4.2.3 Structural Fill Placement and Compaction Requirements**.

Fill operations should commence at the lowest part of the slope in the proposed fill areas. All existing fill should be completely removed to expose the native soil subgrade. The structural fill should be placed in near horizontal lifts and should be adequately benched into the slope in accordance with the criteria discussed below. Slope benches should expose competent native soils.

Existing slopes that are 5H:1V or steeper should be benched horizontally into suitable native soils after removal of surficial unsuitable soils. These soil benches should be wide enough for construction equipment and configured on a 2H:1V bench width-to-height ratio. This construction measure is recommended to allow all structural fill to be keyed into the sloping ground surface. The finished grades should then be established with quality controlled structural fill.

4.2.2 Structural Fill Requirements

Structural fill should meet the following material property requirements:

Fill Type [1]	USCS Classification	Acceptable Location for Placement
Lean clay	CL (LL<40)	All locations and elevations
Lean to fat clay [2]	CL/CH (40<LL<50)	> 1.5 feet below structure finished grade unless tested and meets low volume change material criteria
Fat clay	CH (LL>50)	Not recommended for use as structural fill
Well graded granular	SW, GW [3]	All locations and elevations
Low Volume Change Material [4]	CL (LL<40 & PI<22) or SW, GW [3]	All locations and elevations
On-Site Soils	Various	The on-site soils generally appear suitable for use as structural fill; however, any fill placed should meet the low volume change requirements and be free of deleterious materials such as organics and rock fragments larger than 6 inches; also significant moisture conditioning of the existing cohesive soils will be required prior to its use as a structural fill material.

1. Controlled, compacted fill should consist of approved materials that are free of organic matter and

City of Dublin
OHIO, USA
Approved for Construction
BP13-00400040
04/12/13

debris. Frozen material should not be used, and fill should not be placed on a frozen subgrade. A sample of each material type should be submitted to the geotechnical engineer for evaluation.

2. Delineation of lean to fat clay should be performed in the field by a qualified geotechnical engineer or their representative.
3. Crushed limestone aggregate, limestone screenings, or granular material such as sand, gravel or crushed stone containing at least 18% low plasticity fines.
4. Low plasticity cohesive soil or granular soil having at least 18% low plasticity fines.

4.2.3 Structural Fill Placement and Compaction Requirements

Item	Description
Fill Lift Thickness (Structural Areas)	8 inches or less in loose thickness if heavy, self-propelled compaction equipment is used 4 inches or less if hand compaction equipment used
Minimum Compaction Requirements [1] (Structural Areas)	Minimum 98% of the material's Standard Proctor maximum dry density (ASTM D 698)
Minimum Compaction Requirements (Landscape Areas)	Minimum 95% of Standard Proctor maximum dry density (ASTM D 698) provided long-term plans do not include a structure in these areas
Moisture Content - Cohesive Soil (Low Plasticity) (Landscape Areas)	Within ±3% of optimum moisture content (OMC) as determined by the Standard Proctor test at the time of placement and compaction
Moisture Content [2] - Granular Material	Workable moisture levels

1. Should the results of the in-place density tests indicate the specified moisture or compaction limits have not been met, the area represented by the test should be reworked and retested as required until the specified moisture and compaction requirements are achieved.
2. Specifically, moisture levels should be maintained low enough to allow for satisfactory compaction to be achieved without the cohesionless fill material pumping when proofrolled.
3. All materials to be used as structural fill should be tested in the laboratory to determine their suitability and compaction characteristics.

4.2.4 Utility Trench Backfill

All trench excavations should be made with sufficient working space to permit construction including backfill placement and compaction. Small compaction equipment, such as a vibratory plate, jumping jack or walk-behind vibratory roller may be necessary. In these cases, compactive energy levels are lower and require smaller lift thicknesses to achieve compaction throughout the lift. Lift thicknesses should be maintained at 4 inches or less when using these types of small compaction equipment and the backfill should be compacted to the same criteria as presented for structural fill.

City of Dublin
OHIO, USA
Approved for Construction
BP13-00400040
04/12/13

Compaction requirements for bedding and backfilling around utilities may need to be adjusted to the pipe material type and the pipe manufacturer's bedding and backfill material recommendations.

Utility trenches are a common source of water infiltration and migration. All utility trenches that penetrate beneath the building area should be effectively sealed to restrict water intrusion and flow through the trenches that could migrate below the structure.

4.2.5 Grading and Drainage

During construction, grades should be developed to direct surface water flow away from or around the site. Exposed subgrades should be sloped to provide positive drainage so that saturation of subgrades is avoided. Surface water should not be permitted to accumulate on the site.

Final surrounding grades should be sloped away from the structure on all sides to prevent ponding of water. Gutters and downspouts that drain water a minimum of 10 feet beyond the footprint of the proposed structure are recommended. This can be accomplished through the use of splash-blocks, downspout extensions, and flexible pipes that are designed to attach to the end of the downspout. Flexible pipe should only be used if it is daylighted in such a manner that it gravity-drains collected water. Splash-blocks should also be considered below hose bibs and water spigots.

Groundwater seepage may also occur during the excavation and construction of the proposed building. Trapped water infiltration or groundwater seepage may be encountered, particularly after periods of precipitation. In such an event, sump and pumping methods may be used for temporary dewatering.

For cut or fill slopes, side slopes of 3H:1V or flatter are preferred and recommended to reduce the potential for surface sloughing, provided structural fill is placed in accordance with the recommendations provided in this report. The crest of cut and fill slopes should be at least 10 feet away from the proposed edge of any structure or pavement. Design of slopes should consider measures to collect surface water runoff, removing sloughed material, and perform general slope maintenance. Slopes should be seeded or sodded as soon as practical.

4.2.6 Earthwork Construction Considerations

Although the exposed subgrade is anticipated to be relatively stable upon initial exposure, unstable subgrade conditions could develop during general construction operations, particularly if the soils are wetted and/or subjected to repetitive construction traffic. The use of light construction equipment would aid in reducing subgrade disturbance. The use of remotely operated equipment, such as a backhoe, would be beneficial to perform cuts and reduce subgrade disturbance, particularly in silts and silty sand soils. Should unstable subgrade conditions develop, stabilization measures will need to be employed.

City of Dublin
OHIO, USA
Approved for Construction
BP13-00400040
04/12/13

Upon completion of filling and grading, care should be taken to maintain the subgrade moisture content prior to construction of floor slabs and pavements. Construction traffic over the completed subgrade should be avoided to the extent practical. The site should also be graded to prevent ponding of surface water on the prepared subgrades or in excavations. If the subgrade should become frozen, desiccated, saturated, or disturbed, the affected material should be removed or these materials should be scarified, moisture conditioned, and recompacted prior to floor slab or possible pavement construction.

It is anticipated the decomposed, severely weathered bedrock can be mechanically ripped. Deeper excavation into the bedrock will require the use of heavy-duty excavation equipment. Drilling and blasting will be required to facilitate rock break-up and removal may also be required in deeper, more competent rock. Jack-hammering may be required in utility excavations where working space will be limited.

All excavations should comply with applicable local, state and federal safety regulations, including the current Occupational Health and Safety Administration (OSHA) Excavation and Trench Safety Standards. As a minimum, any temporary excavations should be sloped or braced as required by current OSHA regulations to provide stability and safe working conditions. Temporary excavations may be required during grading operations and installation of utilities. The grading contractor, by his contract, is usually responsible for designing and constructing stable, temporary excavations and should shore, slope or bench the sides of the excavations as required, to maintain stability of both the excavation sides and bottom.

Under no circumstances should the information provided in this report be interpreted to mean that Terracon is responsible for construction site safety or the contractor's activities. Construction site safety is the sole responsibility of the contractor, who shall also be solely responsible for the means, methods, and sequencing of the construction operations.

The geotechnical engineer should be retained during the construction phase of the project to observe earthwork and to perform necessary tests and observations during subgrade preparation; proofrolling; placement and compaction of controlled compacted fills; backfilling of excavations into the completed subgrade, and just prior to construction of building floor slabs.

4.3 Foundations

The proposed building structure can be supported on shallow spread footings. It is anticipated footings for the nursing wings and assisted living wing will bear on soil, but the footings for the central area of the facility may bear on bedrock.

It is recommended that new building footings/foundations completely penetrate any fill and bear on the underlying native cohesive soils of at least medium stiff consistency, on native granular

City of Dublin
OHIO, USA
Approved for Construction
BP13-00400040
04/12/13

soils of at least medium dense relative density, bedrock, or newly placed structural fill or lean concrete that extends to suitable native soil. Where existing undocumented fill or other unsuitable conditions are encountered at the design footing bearing depth, the remedial methods recommended in section **4.3.2 Foundation Construction Considerations** should be implemented. Design recommendations for shallow foundations to support the proposed building are presented below.

4.3.1 Foundation Design Recommendations

The following table represents design recommendations for foundations associated with the building anticipated for this site.

Description	Column	Wall
Net allowable bearing pressure [1]	3,000 psf	3,000 psf
Minimum dimensions	30 inches	18 inches
Minimum embedment below finished grade for frost protection [2]	36 inches	36 inches
Approximate total settlement [3]	<1 inch	<1 inch
Estimated differential settlement	½ inch between columns	½ inch over 40 feet

1. The recommended net allowable bearing pressure is the pressure in excess of the minimum surrounding overburden pressure at the footing base elevation. Assumes any unsuitable or soft soils, if encountered, will be undercut and replaced with structural fill.
2. and to reduce the effects of seasonal moisture variations in the subgrade soils. For perimeter footing and footings beneath unheated areas.
3. The foundation settlement will depend upon the variations within the subsurface soil profile, the structural loading conditions, the embedment depth of the footings, the thickness of compacted fill, and the quality of the earthwork operations.

We also recommend that the building foundations be suitably reinforced to resist movement from potential differential settlement. Walls and slabs should incorporate control joints to minimize effects of differential settlement, particularly where significant cut/fill transitions will occur or where foundations transition from bearing upon bedrock to bearing upon soil.

Foundation excavations should be observed by the geotechnical engineer. If the soil conditions encountered differ significantly from those presented in this report, supplemental recommendations will be required.

4.3.2 Foundation Construction Considerations

Footing excavations in bedrock should be over-excavated at least 6 inches below the design bearing level. The over-excavation should extend laterally a sufficient distance to provide a bond break with the sides of the footing excavation. The side-of-footing bond break can consist of insulation board, plywood, or some other rigid material that will prevent fresh concrete from

City of Dublin
OHIO, USA
Approved for Construction
BP13-00400040
04/12/13

creating a cold joint with the irregular surface on the side of the footing excavation (in the rock). Therefore the rock excavation should be made wide enough to allow for the footing to be formed.

The base of the over-excavation should be backfilled with compacted, well graded, crushed limestone aggregate meeting ODOT 304 materials specification to establish the design footing elevation. Placement and compaction should be in accordance with recommendations provided in section **4.2 Earthwork** of this report. A minimum 6-inch thick layer of the ODOT 304 aggregate material should also be placed on top of any of any lean concrete backfill placed in foundation excavations.

The base of each foundation excavation should be free of water and loose or soft soil, or rock fragments prior to placing concrete. Concrete should be placed as soon after excavating as possible to reduce bearing soil disturbance. If the soils at bearing level become excessively dry, disturbed, saturated, or frozen, the affected soil should be removed prior to placing concrete. Placement of a lean concrete mud-mat over the bearing soils should be considered if the excavations must remain open overnight or for an extended period of time.

If unsuitable bearing soils are encountered in footing excavations, the excavation could be extended deeper to suitable soils and the footing could bear directly on these soils at the lower level, or on lean concrete backfill placed in the excavations. As an alternative, the footings could also bear on properly compacted structural backfill extending down to the suitable soils. Overexcavation for compacted structural fill placement below footings should extend laterally beyond all edges of the footings at least 8 inches per foot of overexcavation depth below footing base elevation. The overexcavation should then be backfilled up to the footing base elevation with well graded granular material placed in lifts of 8 inches or less in loose thickness (6 inches or less if using hand-guided compaction equipment) and compacted to at least 98 percent of the material's standard Proctor maximum dry density (ASTM D 698). The overexcavation and backfill procedure is described in the following figure.

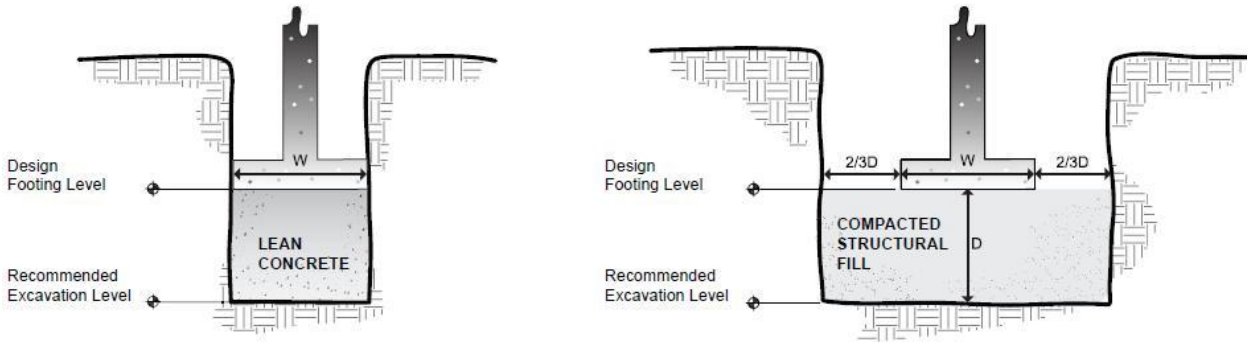

Lean Concrete Backfill **Overexcavation / Backfill**

NOTE: Excavations in sketches shown vertical for convenience. Excavations should be sloped as necessary for safety.

City of Dublin
OHIO, USA
Approved for Construction
BP13-00400040
04/12/13

4.4 Seismic Considerations

Code Used	Site Classification
Ohio Building Code (OBC) [1]	C [2]

1. In general accordance with the *OBC,* Table 1613.5.2.
2. The OBC requires a site soil profile determination extending a depth of 100 feet for seismic site classification. Borings for this study extended to a maximum depth of approximately 20 feet and this seismic site class definition considers that limestone bedrock continues below the maximum depth of the subsurface exploration. Additional exploration to deeper depths could be performed to confirm the conditions below the current depth of exploration. Alternatively, a geophysical exploration could be utilized in order to attempt to justify a higher seismic site class. The current scope requested does not include the required 100 foot soil profile determination.

4.5 Floor Slab

4.5.1 Design Recommendations

ITEM	DESCRIPTION
Floor slab support	Minimum 18-inch low volume change zone and special subgrade preparation is required [1]
Modulus of subgrade reaction	110 pounds per square inch per inch (psi/in) for point loading conditions
Aggregate base course/capillary break [2]	Minimum 4 inches of free draining granular material

1. Floor slabs should be structurally independent of any building footings or walls to reduce the possibility of floor slab cracking caused by differential movement between the slab and foundation. Narrower, turned-down slab-on-grade foundations may be utilized at the approval of the structural engineer. The slabs should be appropriately reinforced to support the proposed loads.

   Due to the moderate to high shrink-swell potential of the fat clay subgrade soils, we recommend a low volume change layer be developed below the floor slab. This layer should be at least 18 inches thick and should meet the Low Volume Change Material criteria outlined in this report in section **4.2 Earthwork**.

   We recommend subgrades be maintained in a relatively moist condition until floor slabs are constructed. If the subgrade should become desiccated prior to construction of floor slabs, the affected material should be removed or the materials scarified, moistened, and recompacted. Upon completion of grading operations in the building areas, care should be taken to maintain the recommended subgrade moisture content and density until construction of the building floor slabs.
2. The floor slab design should include a capillary break, comprised of free-draining, compacted, granular material at least 4 inches thick and can be considered as part of the low volume change zone. Free-draining granular material should have less than 5 percent fines (material passing the #200 sieve). Other design considerations such as cold temperatures and condensation development could warrant more extensive design provisions.

City of Dublin
OHIO, USA
Approved for Construction
BP13-00400040
04/12/13

Where appropriate, saw-cut control joints should be placed in the slab to help control the location and extent of cracking. For additional recommendations refer to the ACI Design Manual. Joints or any cracks that develop should be sealed with a water-proof, non-extruding compressible compound specifically recommended for heavy duty concrete pavement and wet environments.

The use of a vapor retarder should be considered beneath concrete slabs on grade that will be covered with wood, tile, carpet or other moisture sensitive or impervious coverings, or when the slab will support equipment sensitive to moisture. When conditions warrant the use of a vapor retarder, the slab designer should refer to ACI 302 and/or ACI 360 for procedures and cautions regarding the use and placement of a vapor retarder.

4.5.2 Floor Slab Construction Considerations

On most project sites, the site grading is generally accomplished early in the construction phase. However as construction proceeds, the subgrade may be disturbed due to utility excavations, construction traffic, desiccation, rainfall, etc. As a result, the floor slab subgrade may not be suitable for placement of aggregate base and concrete and corrective action will be required.

We recommend the area underlying the floor slab be rough graded and then thoroughly proofrolled using a vibratory roller (minimum dead weight of 8 tons on the drum) for granular soils, or a fully loaded, tandem axle dump truck weighing at least 20 tons for cohesive soils prior to final grading and placement of aggregate base. Particular attention should be paid to high traffic areas that were rutted and disturbed earlier and to areas where backfilled trenches are located. Areas where unsuitable conditions are located should be repaired by removing and replacing the affected material with properly compacted fill. All floor slab subgrade areas should be moisture conditioned and properly compacted to the recommendations in this report immediately prior to placement of the aggregate base and concrete.

4.6 Pavements

4.6.1 Subgrade Preparation

On most project sites, the site grading is accomplished relatively early in the construction phase. Fills are placed and compacted in a uniform manner. However, as construction proceeds, excavations are made into these areas, rainfall and surface water saturates some areas, heavy traffic from concrete trucks and other delivery vehicles disturbs the subgrade and many surface irregularities are filled in with loose soils to temporarily improve trafficability. As a result, the pavement subgrades, initially prepared early in the project, should be carefully evaluated as the time for pavement construction approaches.

City of Dublin
OHIO, USA
Approved for Construction
BP13-00400040
04/12/13

We recommend the moisture content and density of the upper 9 inches of the subgrade be evaluated and the pavement subgrades be proofrolled within two days prior to commencement of actual paving operations. Areas not in compliance with the required ranges of moisture or density should be moisture conditioned and recompacted. Particular attention should be paid to high traffic areas that were rutted and disturbed earlier and to areas where backfilled trenches are located. Areas where unsuitable conditions are located should be repaired by removing and replacing the materials with properly compacted fills.

After proofrolling and repairing deep subgrade deficiencies, the entire subgrade should be scarified and developed as recommended in section **4.2 Earthwork** to provide a uniform subgrade for pavement construction. Areas that appear severely desiccated following site stripping may require further undercutting and moisture conditioning. If a significant precipitation event occurs after the evaluation or if the surface becomes disturbed, the subgrade should be reviewed by qualified personnel immediately prior to paving. The subgrade should be in its finished form at the time of the final review.

4.6.2 Design Considerations

Based on the borings and assuming limited site grading activities, we anticipate the on-site low plasticity soils (cohesive as well as non-cohesive) and structural fill similar to these soils, will be present at design subgrade elevations. A CBR value of 3 has been estimated for preliminary design purposes. This value needs to be verified by performing additional laboratory tests (Laboratory CBR) of the representative soil subgrade samples as the project progresses into final design and construction phase.

To obtain this CBR value in the field, the pavement subgrade should be compacted to at least 98 percent of the standard Proctor density within -3 to +3 percent of its optimum moisture. Proofrolling and re-compacting the subgrade is recommended immediately prior to stone base placement. Soft or weak areas delineated by the proof-rolling operations should be undercut or stabilized in-place to achieve the appropriate subgrade support.

Traffic patterns and anticipated loading conditions were not available at the time that this report was prepared. However, we anticipate that traffic loads will be produced primarily by automobile traffic and occasional delivery and trash removal trucks. The thickness of pavements subjected to heavy truck traffic should be determined using expected traffic volumes, vehicle types, and vehicle loads and should be in accordance with local, city or county ordinances.

Pavement thickness can be determined using AASHTO, Asphalt Institute and/or other methods if specific wheel loads, axle configurations, frequencies, and desired pavement life are provided. Terracon can provide thickness recommendations for pavements subjected to loads other than personal vehicles and occasional delivery and trash removal truck traffic if this information is provided.

City of Dublin
OHIO, USA
Approved for Construction
BP13-00400040
04/12/13

For areas subject to concentrated and repetitive loading conditions such as dumpster pads or loading dock areas, we recommend the use of a Portland Cement Concrete (PCC) pavement. For areas where PCC pavements are planned, a subgrade modulus of 110 pci may be used for pavement design purposes.

Pavement performance is affected by its surroundings. In addition to providing preventive maintenance, the civil engineer should consider the following recommendations in the design and layout of pavements:

- Final grade adjacent to parking lots and drives should slope down from pavement edges at a minimum 2%;
- The subgrade and the pavement surface should have a minimum ¼ inch per foot slope to promote proper surface drainage;
- Install pavement drainage surrounding areas anticipated for frequent wetting;
- Install joint sealant and seal cracks immediately;
- Seal all landscaped areas in, or adjacent to pavements to reduce moisture migration to subgrade soils;
- Place compacted, low permeability backfill against the exterior side of curb and gutter; and,
- Place curb, gutter and/or sidewalk directly on clay subgrade soils rather than on unbound granular base course materials.

4.6.3 Pavement Drainage

Pavements should be sloped to provide rapid drainage of surface water. Water allowed to pond on or adjacent to the pavements could saturate the subgrade and contribute to premature pavement deterioration. In addition, the pavement subgrade should be graded to provide positive drainage within the granular base section. Appropriate sub-drainage or connection to a suitable daylight outlet should be provided to remove water from the granular subbase.

4.6.4 Pavement Maintenance

Preventive maintenance should be planned and provided for through an on-going pavement management program. Preventive maintenance activities are intended to slow the rate of pavement deterioration, and to preserve the pavement investment. Preventive maintenance consists of both localized maintenance (e.g. crack and joint sealing and patching) and global maintenance (e.g. surface sealing). Preventive maintenance is usually the first priority when implementing a planned pavement maintenance program and provides the highest return on investment for pavements. Prior to implementing any maintenance, additional engineering observation is recommended to determine the type and extent of preventive maintenance. Even with periodic maintenance, some movements and related cracking may still occur and repairs may be required.

City of Dublin
OHIO, USA
Approved for Construction
BP13-00400040
04/12/13

4.7 Lateral Earth Pressures

Reinforced concrete walls (e.g. retaining walls) with unbalanced backfill levels on opposite sides should be designed for earth pressures at least equal to those indicated in the following table. Earth pressures will be influenced by structural design of the walls, conditions of wall restraint, methods of construction and/or compaction and the strength of the materials being restrained. Two wall restraint conditions are shown. Active earth pressure is commonly used for design of free-standing cantilever retaining walls and assumes wall movement. The "at-rest" condition assumes no wall movement. The recommended design lateral earth pressures do not include a factor of safety and do not provide for possible hydrostatic pressure on the walls.

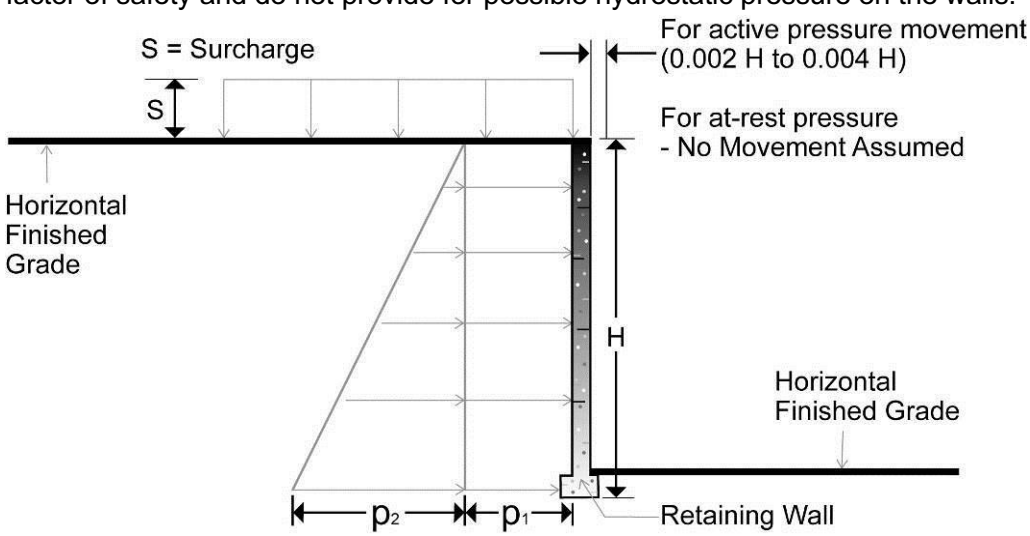

Earth Pressure Coefficients

Earth Pressure Conditions	Coefficient for Backfill Type	Equivalent Fluid Density (pcf)	Surcharge Pressure, p_1 (psf)	Earth Pressure, p_2 (psf)
Active (Ka)	Granular - 0.33 Lean Clay - 0.42	40 50	(0.33)S (0.42)S	(40)H (50)H
At-Rest (Ko)	Granular - 0.46 Lean Clay - 0.58	55 70	(0.46)S (0.58)S	(55)H (70)H
Passive (Kp)	Granular - 3.0 Lean Clay - 2.4	360 290	--- ---	--- ---

<u>Applicable conditions to the above include:</u>

- For active earth pressure, wall must rotate about the base, with top lateral movements of about 0.002 **H** to 0.004 **H**, where **H** is wall height

City of Dublin
OHIO, USA
Approved for Construction
BP13-00400040
04/12/13

- For passive earth pressure to develop, the wall must move horizontally to mobilize resistance
- Uniform surcharge, where S is surcharge pressure
- In-situ soil backfill weight a maximum of 120 pcf
- Horizontal backfill, compacted to at least 98 percent of standard Proctor maximum dry density
- Loading from heavy compaction equipment not included
- No hydrostatic pressures acting on wall
- No dynamic loading
- No safety factor included in soil parameters
- Ignore passive pressure in frost zone
- Fat clay and soils containing pyritic materials should not be used for backfill

Backfill placed against structures should consist of granular soils or low plasticity cohesive soils. For the granular values to be valid, the granular backfill must extend out from the base of the wall at an angle of at least 45 and 60 degrees from vertical for the active and passive cases, respectively. To calculate the resistance to sliding, a value of 0.35 should be used as the allowable coefficient of friction between the footing and the underlying soil.

To control hydrostatic pressure behind the wall, we recommend that a drain be installed at the foundation wall with a collection pipe leading to a reliable discharge. If this is not possible, then combined hydrostatic and lateral earth pressures should be calculated for lean clay backfill using an equivalent fluid weighing 90 and 100 pcf for active and at-rest conditions, respectively. For granular backfill, an equivalent fluid weighing 85 and 90 pcf should be used for active and at-rest conditions, respectively. These pressures do not include the influence of surcharge, equipment or floor loading, which should be added. Heavy equipment should not operate within a distance closer than the exposed height of retaining walls to prevent lateral pressures more than those provided.

5.0 GENERAL COMMENTS

Terracon should be retained to review the final design plans and specifications so comments can be made regarding interpretation and implementation of our geotechnical recommendations in the design and specifications. Terracon also should be retained to provide observation and testing services during grading, excavation, foundation construction and other earth-related construction phases of the project.

The analysis and recommendations presented in this report are based upon the data obtained from the borings performed at the indicated locations and from other information discussed in this report. This report does not reflect variations that may occur between borings, across the site, or due to the modifying effects of construction or weather. The nature and extent of such

City of Dublin
OHIO, USA
Approved for Construction
BP13-00400040
04/12/13

variations may not become evident until during or after construction. If variations appear, we should be immediately notified so that further evaluation and supplemental recommendations can be provided.

Support of floor slab and pavements on or above existing fill soils is discussed in this report. However, even with the recommended construction testing, there is a risk that unsuitable materials within or buried by the existing fill will not be discovered. This risk cannot be eliminated without removing the existing fill but can be reduced by thorough exploration and testing during construction.

The scope of services for this project does not include either specifically or by implication any environmental or biological (e.g., mold, fungi, bacteria) assessment of the site or identification or prevention of pollutants, hazardous materials or conditions. If the owner is concerned about the potential for such contamination or pollution, other studies should be undertaken.

This report has been prepared for the exclusive use of our client for specific application to the project discussed and has been prepared in accordance with generally accepted geotechnical engineering practices. No warranties, either express or implied, are intended or made. Site safety, excavation support, and dewatering requirements are the responsibility of others. In the event that changes in the nature, design, or location of the project as outlined in this report are planned, the conclusions and recommendations contained in this report shall not be considered valid unless Terracon reviews the changes and either verifies or modifies the conclusions of this report in writing.

City of Dublin
OHIO, USA
Approved for Construction
BP13-00400040
04/12/13

APPENDIX A
FIELD EXPLORATION

City of Dublin
OHIO, USA
Approved for Construction
BP13-00400040
04/12/13

Field Exploration Description

The subsurface exploration consisted of drilling and sampling fifteen (15) borings at the site to depths of about 8.7 to 20 feet below existing grades. The boring locations were staked in the field by Terracon personnel using existing site features as references. Elevations of the ground surface at each boring location were determined from the site location plan provided by JMM Architects. Ground surface elevations indicated on the boring logs are rounded to the nearest ½ foot. The locations and elevations of the borings should be considered accurate only to the degree implied by the means and methods used to define them. The approximate boring locations are indicated on the attached Boring Location Plan.

The borings were drilled with an ATV-mounted rotary drill rig using continuous flight hollow-stem augers to advance the boreholes. Samples of the soil encountered in the borings were obtained using the split barrel sampling procedures.

In the split-barrel sampling procedure, the number of blows required to advance a standard 2-inch O.D. split-barrel sampler the last 12 inches of the typical total 18-inch penetration by means of a 140-pound auto-hammer with a free fall of 30 inches, is the standard penetration resistance value (SPT-N). This value is used to estimate the in-situ relative density of cohesionless soils and consistency of cohesive soils.

An automatic SPT hammer was used to advance the split-barrel sampler in the borings performed on this site. A significantly greater efficiency is achieved with the automatic hammer compared to the conventional safety hammer operated with a cathead and rope. This higher efficiency has an appreciable effect on the SPT-N value. The effect of the automatic hammer's efficiency has been considered in the interpretation and analysis of the subsurface information for this report.

The samples were tagged for identification, sealed to reduce moisture loss, and taken to our laboratory for further examination, testing, and classification. Information provided on the boring logs attached to this report includes soil descriptions, consistency evaluations, boring depths, sampling intervals, and any groundwater conditions. The borings were backfilled with auger cuttings prior to the drill crew leaving the site.

A field log of each boring was prepared by the drill crew. These logs included visual classifications of the materials encountered during drilling, as well as, the driller's interpretation of the subsurface conditions between samples. Final boring logs included with this report represent the engineer's interpretation of the field logs and include modifications based on laboratory observation and tests of the samples.

City of Dublin
OHIO, USA
Approved for Construction
BP13-00400040
04/12/13

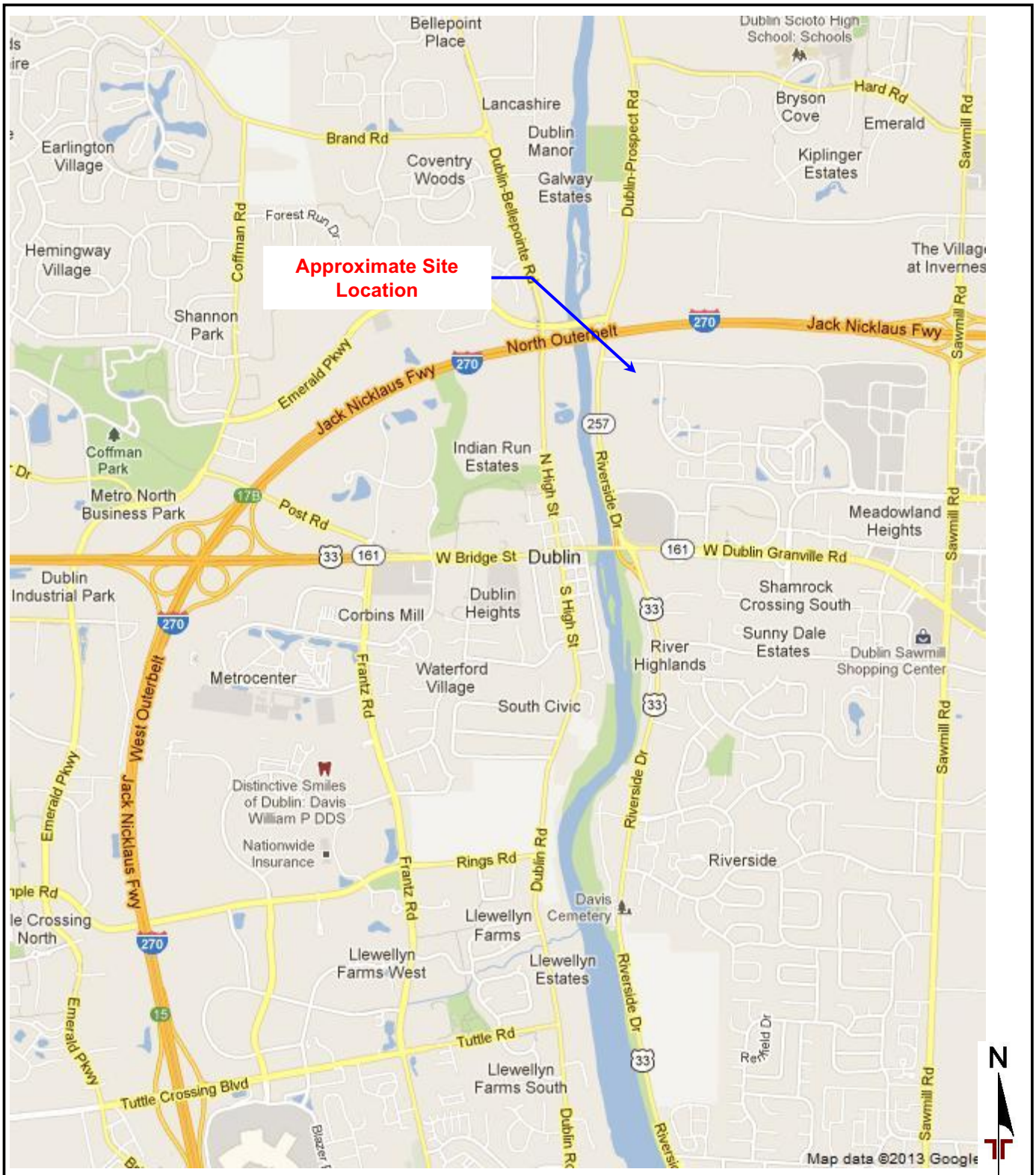

DIAGRAM IS FOR GENERAL LOCATION ONLY, AND IS NOT INTENDED FOR CONSTRUCTION PURPOSES

Project Manager: KME	Project No. N4125218	Terracon Consulting Engineers & Scientists	SITE LOCATION MAP
Drawn by: AKB	Scale: N.T.S.	790 Morrison Road Columbus, Ohio 43230	VRABLE HEALTHCARE CENTER
Checked by: KME	File Name: N4125218BLP	PH. (614) 863-3113 FAX. (614) 863-0475	TULLER RD. & TULLER RIDGE DR. DUBLIN, OHIO
Approved by: KME	Date: January 2013		Exhibit A-2

City of Dublin OHIO USA
Approved for Construction
BP13-00400040
04/12/13

APPROXIMATE BORING LOCATION

DIAGRAM IS FOR GENERAL LOCATION ONLY, AND IS NOT INTENDED FOR CONSTRUCTION PURPOSES

Project Manager: KME	Project No. N4125218	Terracon Consulting Engineers & Scientists	BORING LOCATION PLAN
Drawn by: AKB	Scale: N.T.S.	790 Morrison Road, Columbus, Ohio 43230	VRABLE HEALTHCARE CENTER
Checked by: KME	File Name: N4125218BLP	PH. (614) 863-3113 FAX. (614) 863-0475	TULLER RD. & TULLER RIDGE DR. DUBLIN, OHIO
Approved by: KME	Date: January 2013		Exhibit A-3

City of Dublin OHIO USA
Approved for Construction
BP13-00400040
04/12/13

BORING LOG NO. B-1

PROJECT: ----------

CLIENT: Vrable Land Holding Massillon, LLC

SITE: Tuller Road and Tuller Ridge Drive
Dublin, Ohio

LOCATION See Exhibit A-3

Surface Elev.: 835 (Ft.)

DEPTH	ELEVATION (Ft.)	DESCRIPTION
0.3	834.5	**TOPSOIL (4")**
		SANDY LEAN CLAY (CL), trace gravel, brown, stiff
3.0	832	**SILTY SAND WITH GRAVEL (SM)**, brown and gray, medium dense to very dense
18.0	817	***Auger Refusal at 18 Feet***

DEPTH (Ft.)	SAMPLE TYPE	RECOVERY (In.)	FIELD TEST RESULTS	WATER CONTENT (%)
		18	4-5-6 N=11	20
		18	7-12-17 N=29	
5		8	14-8-11 N=19	
		5	15-24-32 N=56	
10				
		18	19-12-12 N=24	
15				
20				
25				

WATER LEVEL OBSERVATIONS; LABORATORY TORVANE/HP (psf); STRENGTH TEST (TEST TYPE, COMPRESSIVE STRENGTH (psf), STRAIN (%)); ATTERBERG LIMITS (LL-PL-PI): not recorded.

Stratification lines are approximate. In-situ, the transition may be gradual.

Hammer Type: Automatic

Advancement Method:
Hollow Stem Auger

Abandonment Method:
Borings backfilled with soil cuttings upon completion.

Notes:

WATER LEVEL OBSERVATIONS

No water observed

Dry cave-in at 15 feet

Terracon
790 Morrison Road
Columbus, Ohio

Boring Started: 12/16/2012 | Boring Completed: 12/16/2012
Drill Rig: ATV | Driller: Hayslip
Project No.: N4125218 | Exhibit:

City of Dublin OHIO, USA
Approved for Construction
BP13-00400040
04/12/13

THIS BORING LOG IS NOT VALID IF SEPARATED FROM ORIGINAL REPORT. GEO LOG-DEPTH TO BOTTOM OF PAGE VRABLE HEALTHCARE FACILITY LOGS.GPJ TERRACON2012.GDT 1/14/13

BORING LOG NO. B-2

PROJECT: ----------

CLIENT: Vrable Land Holding Massillon, LLC

SITE: Tuller Road and Tuller Ridge Drive
Dublin, Ohio

LOCATION See Exhibit A-3

Surface Elev.: 827 (Ft.)

DEPTH	ELEVATION (Ft.)	Description
0.5	826.5	**TOPSOIL (6")**
3.0	824	**FILL - SANDY LEAN CLAY (CL)**, trace gravel, brown, medium stiff
5.5	821.5	**FILL - LEAN CLAY (CL)**, trace sand, brown, soft to medium stiff, noted organics, sticks and logs
8.0	819	**FILL - SANDY LEAN CLAY WITH GRAVEL (CL)**, brown, medium stiff to stiff, noted glass, brick and aluminum fragments
14.0	813	**SILTY GRAVEL WITH SAND (GM)**, brown, very dense, noted cobbles and limestone layers (severely to completely weathered bedrock)
20.0	807	**LIMESTONE**, gray, very thinly to thinly bedded, moderately to moderately severely weathered, hard, noted 2 inch granite layer
		Auger Refusal at 20 Feet

Depth (Ft.)	Recovery (In.)	Field Test Results	Laboratory Torvane/HP (psf)	Water Content (%)	Atterberg Limits LL-PL-PI
	18	5-5-3 N=8		17	
	4	0-0-1 N=1	1000 (HP)	23	
	13	5-6-8 N=14		20	28-19-9
	18	28-30-31 N=61			
	3	50/3" N=50/3"			
	8				
	19				

Water Level Observations: 5 feet

Stratification lines are approximate. In-situ, the transition may be gradual.

Hammer Type: Automatic

Advancement Method:
Hollow Stem Auger

Abandonment Method:
Borings backfilled with soil cuttings upon completion.

Notes:

WATER LEVEL OBSERVATIONS

- *Water initially observed at 5.5 feet*
- *Water observed at 5 feet after boring completion*
- *Wet cave-in at 8 feet*

Terracon
790 Morrison Road
Columbus, Ohio

Boring Started: 12/14/2012 | Boring Completed: 12/15/2012
Drill Rig: ATV | Driller: Hayslip
Project No.: N4125218 | Exhibit: A-3

City of Dublin OHIO, USA
Approved for Construction
BR13-00400040
04/12/13

THIS BORING LOG IS NOT VALID IF SEPARATED FROM ORIGINAL REPORT. GEO LOG-DEPTH TO BOTTOM OF PAGE VRABLE HEALTHCARE FACILITY LOGS.GPJ TERRACON2012.GDT 1/14/13

BORING LOG NO. B-3

PROJECT: ----------

CLIENT: Vrable Land Holding Massillon, LLC

SITE: Tuller Road and Tuller Ridge Drive
Dublin, Ohio

LOCATION See Exhibit A-3

Surface Elev.: 830 (Ft.)

DEPTH	ELEVATION (Ft.)	Description
0.3	829.5	**TOPSOIL (3")**
		CLAYEY SAND WITH GRAVEL (SC), brown, very loose
3.0	827	
		LEAN CLAY WITH SAND AND GRAVEL (CL), brown, very stiff
5.5	824.5	
		SANDY SILT (ML), trace gravel, brown, medium dense
8.0	822	
		CLAYEY GRAVEL WITH SAND (GC), brown, very dense, noted cobbles and limestone layers (severely to completely weathered bedrock)
14.0	816	
		Auger Refusal at 14 Feet

DEPTH (Ft.)	SAMPLE TYPE	RECOVERY (In.)	FIELD TEST RESULTS	WATER CONTENT (%)
		4	2-2-1 N=3	
5		18	6-7-10 N=17	15
		18	7-9-13 N=22	
10		8	7-8-50/4" N=50/4"	
		1	50/2" N=50/2"	
15				
20				
25				

GRAPHIC LOG | WATER LEVEL OBSERVATIONS | LABORATORY TORVANE/HP (psf) | STRENGTH TEST: TEST TYPE, COMPRESSIVE STRENGTH (psf), STRAIN (%) | ATTERBERG LIMITS: LL-PL-PI

Stratification lines are approximate. In-situ, the transition may be gradual.

Hammer Type: Automatic

Advancement Method:
Hollow Stem Auger

Abandonment Method:
Borings backfilled with soil cuttings upon completion.

Notes:

WATER LEVEL OBSERVATIONS

No water observed

Dry cave-in at 10 feet

Terracon
790 Morrison Road
Columbus, Ohio

Boring Started: 12/14/2012 | Boring Completed: 12/14/2012

Drill Rig: ATV | Driller: Hayslip

Project No.: N4125218 | Exhibit: A-3

City of Dublin OHIO, USA
Approved for Construction
BR13-00400040
04/12/13

THIS BORING LOG IS NOT VALID IF SEPARATED FROM ORIGINAL REPORT. GEO LOG-DEPTH TO BOTTOM OF PAGE VRABLE HEALTHCARE FACILITY LOGS.GPJ TERRACON2012.GDT 1/14/13

BORING LOG NO. B-4

PROJECT: ----------

CLIENT: Vrable Land Holding Massillon, LLC

SITE: Tuller Road and Tuller Ridge Drive
Dublin, Ohio

LOCATION See Exhibit A-3

Surface Elev.: 840.5 (Ft.)

DEPTH	ELEVATION (Ft.)	Description
0.5	840	**TOPSOIL (6")**
		LEAN CLAY (CL), trace sand, trace gravel, brown, medium stiff to stiff
7.5	833	**SILTY SAND WITH GRAVEL (SM)**, brown, dense to very dense, noted limestone layers (severely to completely weathered bedrock)
18.6	822	***Auger Refusal at 18.6 Feet***

DEPTH (Ft.)	SAMPLE TYPE	RECOVERY (In.)	FIELD TEST RESULTS	LABORATORY TORVANE/HP (psf)	STRENGTH TEST: TEST TYPE	STRENGTH TEST: COMPRESSIVE STRENGTH (psf)	STRENGTH TEST: STRAIN (%)	WATER CONTENT (%)	ATTERBERG LIMITS: LL-PL-PI
	X	18	2-2-2 N=4	2500 (HP)				22	
5	X	0	5-5-6 N=11						
	X	11	5-6-8 N=14	2000 (HP)				27	
10	X	18	15-30-20 N=50						
15	X	18	14-17-31 N=48						
20		1	50/1" N=50/1"						
25									

Stratification lines are approximate. In-situ, the transition may be gradual.

Hammer Type: Automatic

Advancement Method:
Hollow Stem Auger

Abandonment Method:
Borings backfilled with soil cuttings upon completion.

Notes:

WATER LEVEL OBSERVATIONS

No water observed

Dry cave-in at 14.5 feet

Terracon
790 Morrison Road
Columbus, Ohio

Boring Started: 12/14/2012
Boring Completed: 12/14/2012
Drill Rig: ATV
Driller: Hayslip
Project No.: N4125218
Exhibit:

City of Dublin
OHIO, USA
Approved for Construction
B013-00400040
04/12/13

THIS BORING LOG IS NOT VALID IF SEPARATED FROM ORIGINAL REPORT. GEO LOG-DEPTH TO BOTTOM OF PAGE VRABLE HEALTHCARE FACILITY LOGS.GPJ TERRACON2012.GDT 1/14/13

BORING LOG NO. B-5

PROJECT: ----------

CLIENT: Vrable Land Holding Massillon, LLC

SITE: Tuller Road and Tuller Ridge Drive
Dublin, Ohio

LOCATION See Exhibit A-3

Surface Elev.: 843 (Ft.)

DEPTH	ELEVATION (Ft.)	Description
0.5	842.5	**TOPSOIL (6")**
		SANDY LEAN CLAY (CL), trace gravel, brown, stiff
3.0	840	
		LEAN CLAY (CL), trace gravel, brown, very stiff
5.5	837.5	
		SILTY SAND WITH GRAVEL (SM), brown, very dense, (severely to completely weathered bedrock)
11.5	831.5	
		LIMESTONE, gray, very thinly to thinly bedded, moderately to moderately severely weathered, hard, noted 1" shale layer at 19.5'
20.0	823	
		Auger Refusal at 20 Feet

DEPTH (Ft.)	SAMPLE TYPE	RECOVERY (In.)	FIELD TEST RESULTS	WATER CONTENT (%)
		18	3-4-5 N=9	17
		1	17-16-21 N=37	13
5		9	21-50/4" N=50/4"	
		5	50/5" N=50/5"	
10				
		52		
15		48		
20				
25				

GRAPHIC LOG | WATER LEVEL OBSERVATIONS | LABORATORY TORVANE/HP (psf) | STRENGTH TEST: TEST TYPE, COMPRESSIVE STRENGTH (psf), STRAIN (%) | ATTERBERG LIMITS: LL-PL-PI

Stratification lines are approximate. In-situ, the transition may be gradual.

Hammer Type: Automatic

Advancement Method:
Hollow Stem Auger

Abandonment Method:
Borings backfilled with soil cuttings upon completion.

Notes:

WATER LEVEL OBSERVATIONS

No water observed

Wet cave-in at 9 feet

Terracon
790 Morrison Road
Columbus, Ohio

Boring Started: 12/15/2012 | Boring Completed: 12/15/2012

Drill Rig: ATV | Driller: Hayslip

Project No.: N4125218 | Exhibit: A-3

City of Dublin OHIO, USA
Approved for Construction
BR13-00400040
04/12/13

THIS BORING LOG IS NOT VALID IF SEPARATED FROM ORIGINAL REPORT. GEO LOG-DEPTH TO BOTTOM OF PAGE VRABLE HEALTHCARE FACILITY LOGS.GPJ TERRACON2012.GDT 1/14/13

BORING LOG NO. B-6

PROJECT: ----------

CLIENT: Vrable Land Holding Massillon, LLC

SITE: Tuller Road and Tuller Ridge Drive
Dublin, Ohio

LOCATION See Exhibit A-3

Surface Elev.: 845 (Ft.)

DEPTH	ELEVATION (Ft.)	Description
0.5	844.5	**TOPSOIL (6")**
0.8	844	**FILL - SILTY GRAVEL (GM)**, noted brick fragments and organics
		LEAN CLAY (CL), trace sand, brown, stiff
5.5	839.5	**LEAN CLAY (CL)**, trace sand, trace gravel, brown, medium stiff to stiff
7.5	837.5	**SILTY SAND WITH GRAVEL (SM)**, brown, very dense, noted limestone layers (severely to completely weathered bedrock)
9.0	836	***Auger Refusal at 9 Feet***

DEPTH (Ft.)	SAMPLE TYPE	RECOVERY (In.)	FIELD TEST RESULTS	LABORATORY TORVANE/HP (psf)	STRENGTH TEST: TEST TYPE	STRENGTH TEST: COMPRESSIVE STRENGTH (psf)	STRENGTH TEST: STRAIN (%)	WATER CONTENT (%)	ATTERBERG LIMITS: LL-PL-PI
		18	4-5-5 N=10	4500 (HP)				21	
5		18	3-4-5 N=9	3500 (HP)				34	
		18	4-4-4 N=8					20	
9		6	50/6" N=50/6"						
10									
15									
20									
25									

Stratification lines are approximate. In-situ, the transition may be gradual.

Hammer Type: Automatic

Advancement Method:
Hollow Stem Auger

Abandonment Method:
Borings backfilled with soil cuttings upon completion.

Notes:

WATER LEVEL OBSERVATIONS

No water observed

Dry cave-in at 6 feet

Terracon
790 Morrison Road
Columbus, Ohio

Boring Started: 12/14/2012 | Boring Completed: 12/14/2012

Drill Rig: ATV | Driller: Hayslip

Project No.: N4125218 | Exhibit:

City of Dublin
OHIO, USA
Approved for Construction
B013-00400040
04/12/13

THIS BORING LOG IS NOT VALID IF SEPARATED FROM ORIGINAL REPORT. GEO LOG-DEPTH TO BOTTOM OF PAGE VRABLE HEALTHCARE FACILITY LOGS.GPJ TERRACON2012.GDT 1/14/13

BORING LOG NO. B-7

PROJECT: ----------

CLIENT: Vrable Land Holding Massillon, LLC

SITE: Tuller Road and Tuller Ridge Drive
Dublin, Ohio

LOCATION See Exhibit A-3

Surface Elev.: 844 (Ft.)

DEPTH	ELEVATION (Ft.)	Description
0.3	843.5	**TOPSOIL (3")**
		FILL - CLAYEY GRAVEL (GC), trace sand, brown, loose, noted concrete, noted organics
3.0	841	
		LEAN CLAY (CL), trace gravel, brown, very stiff
5.5	838.5	
		POORLY GRADED GRAVEL WITH CLAY AND SAND (GP-GC), brown, dense to very dense, noted limestone layers (severely to completely weathered bedrock)
9.0	835	
		Auger Refusal at 9 Feet

DEPTH (Ft.)	SAMPLE TYPE	RECOVERY (In.)	FIELD TEST RESULTS	LABORATORY TORVANE/HP (psf)	STRENGTH TEST: TEST TYPE	STRENGTH TEST: COMPRESSIVE STRENGTH (psf)	STRENGTH TEST: STRAIN (%)	WATER CONTENT (%)	ATTERBERG LIMITS: LL-PL-PI
		18	3-3-5 N=8						
5		5	8-5-13 N=18	2000 (HP)				22	
		18	12-16-22 N=38						
		2	50/2" N=50/2"						
10									
15									
20									
25									

WATER LEVEL OBSERVATIONS

Stratification lines are approximate. In-situ, the transition may be gradual.

Hammer Type: Automatic

Advancement Method:
Hollow Stem Auger

Abandonment Method:
Borings backfilled with soil cuttings upon completion.

Notes:

WATER LEVEL OBSERVATIONS

No water observed

Dry cave-in at 7 feet

Terracon
790 Morrison Road
Columbus, Ohio

Boring Started: 12/16/2012
Boring Completed: 12/16/2012
Drill Rig: ATV
Driller: Hayslip
Project No.: N4125218
Exhibit: A-10

City of Dublin
OHIO, USA
Approved for Construction
BP13-00400040
04/12/13

THIS BORING LOG IS NOT VALID IF SEPARATED FROM ORIGINAL REPORT. GEO LOG-DEPTH TO BOTTOM OF PAGE VRABLE HEALTHCARE FACILITY LOGS.GPJ TERRACON2012.GDT 1/14/13

BORING LOG NO. B-8

PROJECT: ----------

CLIENT: Vrable Land Holding Massillon, LLC

SITE: Tuller Road and Tuller Ridge Drive
Dublin, Ohio

LOCATION See Exhibit A-3

Surface Elev.: 837.5 (Ft.)

DEPTH	ELEVATION (Ft.)	Description
0.3	837	**TOPSOIL (3")**
		LEAN CLAY (CL), trace gravel, brown, medium stiff to stiff
8.0	829.5	**SILTY SAND WITH GRAVEL (SM)**, brown, very dense, (severely to completely weathered bedrock)
15.0	822.5	**LIMESTONE**, gray to white, moderately to moderately severely weathered, hard
20.0	817.5	***Auger Refusal at 20 Feet***

Sample	Recovery (In.)	Field Test Results	Laboratory Torvane/HP (psf)	Strength Test: Test Type	Compressive Strength (psf)	Strain (%)	Water Content (%)	Atterberg Limits LL-PL-PI
	18	3-3-5 N=8					24	
	18	3-3-4 N=7	3000 (HP)				27	
	18	6-8-7 N=15					15	
	9	16-50/3" N=50/3"						
	9	40-50/3" N=50/3"						
	56							

Stratification lines are approximate. In-situ, the transition may be gradual.

Hammer Type: Automatic

Advancement Method:
Hollow Stem Auger

Abandonment Method:
Borings backfilled with soil cuttings upon completion.

Notes:

WATER LEVEL OBSERVATIONS

No water observed during drilling

Water observed at 11 feet after boring completion

Wet cave-in at 13 feet

Terracon
790 Morrison Road
Columbus, Ohio

Boring Started: 12/15/2012 | Boring Completed: 12/15/2012

Drill Rig: ATV | Driller: Hayslip

Project No.: N4125218 | Exhibit: A-11

City of Dublin OHIO, USA
Approved for Construction
BR13-00400040
04/12/13

THIS BORING LOG IS NOT VALID IF SEPARATED FROM ORIGINAL REPORT. GEO LOG-DEPTH TO BOTTOM OF PAGE VRABLE HEALTHCARE FACILITY LOGS.GPJ TERRACON2012.GDT 1/14/13

BORING LOG NO. B-9

PROJECT: ----------

CLIENT: Vrable Land Holding Massillon, LLC

SITE: Tuller Road and Tuller Ridge Drive
Dublin, Ohio

LOCATION See Exhibit A-3

Surface Elev.: 834 (Ft.)

DEPTH	ELEVATION (Ft.)	DESCRIPTION
0.3	833.5	**TOPSOIL (4")**
		LEAN CLAY (CL), trace gravel, brown, medium stiff to stiff, noted boulder at 8.5 feet
13.2	821	*Auger Refusal at 13.2 Feet*

DEPTH (Ft.)	SAMPLE TYPE	RECOVERY (In.)	FIELD TEST RESULTS	LABORATORY TORVANE/HP (psf)	STRENGTH TEST: TEST TYPE	STRENGTH TEST: COMPRESSIVE STRENGTH (psf)	STRENGTH TEST: STRAIN (%)	WATER CONTENT (%)	ATTERBERG LIMITS: LL-PL-PI
		18	2-2-3 N=5	2000 (HP)				23	
		18	3-5-6 N=11	3000 (HP)				24	
		18	9-12-13 N=25					13	
		3	50/3" N=50/3"						

Stratification lines are approximate. In-situ, the transition may be gradual.

Hammer Type: Automatic

Advancement Method:
Hollow Stem Auger

Abandonment Method:
Borings backfilled with soil cuttings upon completion.

Notes:

WATER LEVEL OBSERVATIONS

No water observed

Dry cave-in at 10.5 feet

Terracon
790 Morrison Road
Columbus, Ohio

Boring Started: 12/14/2012 | Boring Completed: 12/14/2012

Drill Rig: ATV | Driller: Hayslip

Project No.: N4125218 | Exhibit: A-12

City of Dublin OHIO, USA
Approved for Construction
BR13-00400040
04/12/13

THIS BORING LOG IS NOT VALID IF SEPARATED FROM ORIGINAL REPORT. GEO LOG-DEPTH TO BOTTOM OF PAGE VRABLE HEALTHCARE FACILITY LOGS.GPJ TERRACON2012.GDT 1/14/13

BORING LOG NO. B-10

PROJECT: ----------

CLIENT: Vrable Land Holding Massillon, LLC

SITE: Tuller Road and Tuller Ridge Drive
Dublin, Ohio

LOCATION See Exhibit A-3

Surface Elev.: 834 (Ft.)

DEPTH	ELEVATION (Ft.)	Description
0.2	834	**TOPSOIL (2")**
		LEAN CLAY (CL), trace gravel, brown, stiff
3.0	831	
		SANDY LEAN CLAY (CL), trace gravel, brown, stiff, noted cobbles and limestone layers (severely to completely weathered bedrock)
5.5	828.5	
		SILTY GRAVEL WITH SAND (GM), brown, very dense, noted cobbles and limestone layers (severely to completely weathered bedrock)
8.0	826	
		SILTY SAND WITH GRAVEL (SM), brown, very dense, noted cobbles and limestone layers (severely to completely weathered bedrock)
12.0	822	
		Auger Refusal at 12 Feet

DEPTH (Ft.)	SAMPLE TYPE	RECOVERY (In.)	FIELD TEST RESULTS	WATER CONTENT (%)
		18	3-4-4 N=8	14
		3	50/3" N=50/3"	
5		8	17-19-50/5" N=50/5"	
		18	28-33-28 N=61	
10				
15				
20				
25				

GRAPHIC LOG | WATER LEVEL OBSERVATIONS | LABORATORY TORVANE/HP (psf) | STRENGTH TEST: TEST TYPE, COMPRESSIVE STRENGTH (psf), STRAIN (%) | ATTERBERG LIMITS: LL-PL-PI

Stratification lines are approximate. In-situ, the transition may be gradual.

Hammer Type: Automatic

Advancement Method:
Hollow Stem Auger

Abandonment Method:
Borings backfilled with soil cuttings upon completion.

Notes:

WATER LEVEL OBSERVATIONS

No water observed

Dry cave-in at 8 feet

Terracon
790 Morrison Road
Columbus, Ohio

Boring Started: 12/15/2012 | Boring Completed: 12/15/2012
Drill Rig: ATV | Driller: Hayslip
Project No.: N4125218 | Exhibit: A-13

City of Dublin OHIO, USA
Approved for Construction
BR13-00400040
04/12/13

THIS BORING LOG IS NOT VALID IF SEPARATED FROM ORIGINAL REPORT. GEO LOG-DEPTH TO BOTTOM OF PAGE VRABLE HEALTHCARE FACILITY LOGS.GPJ TERRACON2012.GDT 1/14/13

BORING LOG NO. B-11

PROJECT: ----------

CLIENT: Vrable Land Holding Massillon, LLC

SITE: Tuller Road and Tuller Ridge Drive
Dublin, Ohio

LOCATION See Exhibit A-3

Surface Elev.: 841 (Ft.)

DEPTH	ELEVATION (Ft.)	Description
0.5	840.5	**TOPSOIL (6")**
		FAT CLAY (CH), trace gravel, brown, stiff to very stiff
5.5	835.5	**SILTY GRAVEL WITH SAND (GM)**, brown, medium dense to dense, noted cobbles and limestone layers (severely to completely weathered bedrock)
10.5	830.5	***Auger Refusal at 10.5 Feet***

Sample Depth (Ft.)	Recovery (In.)	Field Test Results	Laboratory Torvane/HP (psf)	Strength Test: Test Type	Strength Test: Compressive Strength (psf)	Strength Test: Strain (%)	Water Content (%)	Atterberg Limits LL-PL-PI
	18	3-4-7 N=11					19	
	18	4-5-6 N=11	6000 (HP)				21	59-41-18
	18	7-8-8 N=16						
	14	12-12-18 N=30						

Stratification lines are approximate. In-situ, the transition may be gradual.

Hammer Type: Automatic

Advancement Method:
Hollow Stem Auger

Abandonment Method:
Borings backfilled with soil cuttings upon completion.

Notes:

WATER LEVEL OBSERVATIONS

No water observed

Dry cave-in at 5 feet

Terracon
790 Morrison Road
Columbus, Ohio

Boring Started: 12/14/2012 | Boring Completed: 12/14/2012
Drill Rig: ATV | Driller: Hayslip
Project No.: N4125218 | Exhibit: A-14

City of Dublin OHIO, USA
Approved for Construction
BR13-00400040
04/12/13

THIS BORING LOG IS NOT VALID IF SEPARATED FROM ORIGINAL REPORT. GEO LOG-DEPTH TO BOTTOM OF PAGE VRABLE HEALTHCARE FACILITY LOGS.GPJ TERRACON2012.GDT 1/14/13

BORING LOG NO. B-12

PROJECT: ----------

CLIENT: Vrable Land Holding Massillon, LLC

SITE: Tuller Road and Tuller Ridge Drive
Dublin, Ohio

LOCATION See Exhibit A-3

Surface Elev.: 837.5 (Ft.)

DEPTH	ELEVATION (Ft.)	Description
0.3	837	**TOPSOIL (4")**
		LEAN CLAY (CL), trace sand, brown, medium stiff to stiff
5.5	832	
		LEAN CLAY (CL), trace sand, trace gravel, brown, very stiff
7.0	830.5	
		SILTY SAND WITH GRAVEL (SM), brown and gray, very dense, noted limestone layers (severely to completely weathered bedrock)
12.0	825.5	
		Auger Refusal at 12 Feet

DEPTH (Ft.)	SAMPLE TYPE	RECOVERY (In.)	FIELD TEST RESULTS	LABORATORY TORVANE/HP (psf)	STRENGTH TEST: TEST TYPE	STRENGTH TEST: COMPRESSIVE STRENGTH (psf)	STRENGTH TEST: STRAIN (%)	WATER CONTENT (%)	ATTERBERG LIMITS: LL-PL-PI
		18	3-2-4 N=6						
		18	5-5-6 N=11	4000 (HP)				22	
		18	8-10-11 N=21					11	
		10	39-50/4" N=50/4"						

Stratification lines are approximate. In-situ, the transition may be gradual.

Hammer Type: Automatic

Advancement Method:
Hollow Stem Auger

Abandonment Method:
Borings backfilled with soil cuttings upon completion.

Notes:

WATER LEVEL OBSERVATIONS

No water observed

Dry cave-in at 9 feet

Terracon
790 Morrison Road
Columbus, Ohio

Boring Started: 12/16/2012 | Boring Completed: 12/16/2012

Drill Rig: ATV | Driller: Hayslip

Project No.: N4125218 | Exhibit: A-18

City of Dublin OHIO, USA
Approved for Construction
BR13-00400040
04/12/13

THIS BORING LOG IS NOT VALID IF SEPARATED FROM ORIGINAL REPORT. GEO LOG-DEPTH TO BOTTOM OF PAGE VRABLE HEALTHCARE FACILITY LOGS.GPJ TERRACON2012.GDT 1/14/13

BORING LOG NO. P-1

PROJECT: ----------

CLIENT: Vrable Land Holding Massillon, LLC

SITE: Tuller Road and Tuller Ridge Drive
Dublin, Ohio

LOCATION See Exhibit A-3

Surface Elev.: 839 (Ft.)

DEPTH	ELEVATION (Ft.)	Description
0.3	838.5	**TOPSOIL (4")**
3.0	836	**FAT CLAY (CH)**, trace sand, brown, medium stiff to stiff
5.5	833.5	**CLAYEY GRAVEL (GC)**, trace sand, medium dense
8.7	830.5	**SILTY GRAVEL WITH SAND (GM)**, brown, very dense, noted limestone layers (severely to completely weathered bedrock)
		Boring Terminated at 8.7 Feet

DEPTH (Ft.)	WATER LEVEL OBSERVATIONS	SAMPLE TYPE	RECOVERY (In.)	FIELD TEST RESULTS	LABORATORY TORVANE/HP (psf)	STRENGTH TEST: TEST TYPE	STRENGTH TEST: COMPRESSIVE STRENGTH (psf)	STRENGTH TEST: STRAIN (%)	WATER CONTENT (%)	ATTERBERG LIMITS: LL-PL-PI
		X	18	3-4-5 N=9	2000 (HP)				32	67-46-21
5		X	18	5-6-17 N=23						
		X	18	15-21-33 N=54						
		X	2	50/2" N=50/2"						
10										
15										
20										
25										

Stratification lines are approximate. In-situ, the transition may be gradual.

Hammer Type: Automatic

Advancement Method:
Hollow Stem Auger

Abandonment Method:
Borings backfilled with soil cuttings upon completion.

Notes:

WATER LEVEL OBSERVATIONS

No water observed

Dry cave-in at 6 feet

Terracon
790 Morrison Road
Columbus, Ohio

Boring Started: 12/16/2012 | Boring Completed: 12/16/2012

Drill Rig: ATV | Driller: Hayslip

Project No.: N4125218 | Exhibit: A-16

City of Dublin OHIO, USA
Approved for Construction
BP13-00400040
04/12/13

THIS BORING LOG IS NOT VALID IF SEPARATED FROM ORIGINAL REPORT. GEO LOG-DEPTH TO BOTTOM OF PAGE VRABLE HEALTHCARE FACILITY LOGS.GPJ TERRACON2012.GDT 1/14/13

BORING LOG NO. P-2

PROJECT: ----------

CLIENT: Vrable Land Holding Massillon, LLC

SITE: Tuller Road and Tuller Ridge Drive
Dublin, Ohio

LOCATION See Exhibit A-3

Surface Elev.: 835.5 (Ft.)

DEPTH	ELEVATION (Ft.)	Description
0.8	834.5	**TOPSOIL (10")**
5.5	830	**LEAN CLAY (CL)**, trace sand, brown, stiff to very stiff
9.7	826	**SILTY SAND WITH GRAVEL (SM)**, gray, very dense, noted limestone layers (severely to completely weathered bedrock)
		Boring Terminated at 9.7 Feet

DEPTH (Ft.)	WATER LEVEL OBSERVATIONS	SAMPLE TYPE	RECOVERY (In.)	FIELD TEST RESULTS	LABORATORY TORVANE/HP (psf)	STRENGTH TEST: TEST TYPE	STRENGTH TEST: COMPRESSIVE STRENGTH (psf)	STRENGTH TEST: STRAIN (%)	WATER CONTENT (%)	ATTERBERG LIMITS: LL-PL-PI
		X	18	3-4-5 N=9					20	
		X	18	4-5-6 N=11						
		X	18	23-37-40 N=77						
		X	13	17-43-50/1" N=50/1"						

5, 10, 15, 20, 25

Stratification lines are approximate. In-situ, the transition may be gradual.

Hammer Type: Automatic

Advancement Method:
Hollow Stem Auger

Abandonment Method:
Borings backfilled with soil cuttings upon completion.

Notes:

WATER LEVEL OBSERVATIONS

No water observed

Dry cave-in at 6 feet

Terracon
790 Morrison Road
Columbus, Ohio

Boring Started: 12/16/2012
Boring Completed: 12/16/2012
Drill Rig: ATV
Driller: Hayslip
Project No.: N4125218
Exhibit: A-7

City of Dublin
OHIO, USA
Approved for Construction
BR13-00400040
04/12/13

THIS BORING LOG IS NOT VALID IF SEPARATED FROM ORIGINAL REPORT. GEO LOG-DEPTH TO BOTTOM OF PAGE VRABLE HEALTHCARE FACILITY LOGS.GPJ TERRACON2012.GDT 1/14/13

BORING LOG NO. P-3

PROJECT: ----------

CLIENT: Vrable Land Holding Massillon, LLC

SITE: Tuller Road and Tuller Ridge Drive
Dublin, Ohio

LOCATION See Exhibit A-3

Surface Elev.: 835 (Ft.)

DEPTH	ELEVATION (Ft.)	Description
0.7	834.5	**TOPSOIL (8")**
3.0	832	**SILTY SAND WITH GRAVEL (SM)**, brown, dense, noted cobbles and limestone layers (severely to completely weathered bedrock)
10.0	825	**SILTY GRAVEL WITH SAND (GM)**, brown and gray, dense, noted cobbles and limestone layers (severely to completely weathered bedrock)
		Boring Terminated at 10 Feet

DEPTH (Ft.)	SAMPLE TYPE	RECOVERY (In.)	FIELD TEST RESULTS	WATER CONTENT (%)
	X	18	6-14-17 N=31	6
5	X	18	12-17-27 N=44	
	X	18	21-20-20 N=40	
	X	3	7-9-17 N=26	
10				
15				
20				
25				

GRAPHIC LOG | WATER LEVEL OBSERVATIONS | LABORATORY TORVANE/HP (psf) | STRENGTH TEST: TEST TYPE, COMPRESSIVE STRENGTH (psf), STRAIN (%) | ATTERBERG LIMITS: LL-PL-PI

Stratification lines are approximate. In-situ, the transition may be gradual.

Hammer Type: Automatic

Advancement Method:
Hollow Stem Auger

Abandonment Method:
Borings backfilled with soil cuttings upon completion.

Notes:

WATER LEVEL OBSERVATIONS

No water observed

Dry cave-in at 6 feet

Terracon
790 Morrison Road
Columbus, Ohio

Boring Started: 12/14/2012 | Boring Completed: 12/14/2012

Drill Rig: ATV | Driller: Hayslip

Project No.: N4125218 | Exhibit: A-18

City of Dublin OHIO, USA
Approved for Construction
BR13-00400040
04/12/13

THIS BORING LOG IS NOT VALID IF SEPARATED FROM ORIGINAL REPORT. GEO LOG-DEPTH TO BOTTOM OF PAGE VRABLE HEALTHCARE FACILITY LOGS.GPJ TERRACON2012.GDT 1/14/13

APPENDIX B
LABORATORY TESTING

City of Dublin
OHIO, USA
Approved for Construction
BP13-00400040
04/12/13

Laboratory Testing

As a part of the laboratory testing program, the soil samples were classified in the laboratory based on visual observation, and texture. The soil descriptions presented on the boring logs for native soils are in accordance with our enclosed General Notes and Unified Soil Classification System (USCS). A brief description of the Unified System is included in this report. Classification was predominantly by visual manual procedures. Moisture content and Atterberg Limit tests were performed on selected samples. The results of this laboratory testing are presented on the boring logs included in Appendix A and laboratory data sheets are included in Appendix B.

City of Dublin OHIO, USA
Approved for Construction
BP13-00400040
04/12/13

LIQUID AND PLASTIC LIMITS TEST REPORT

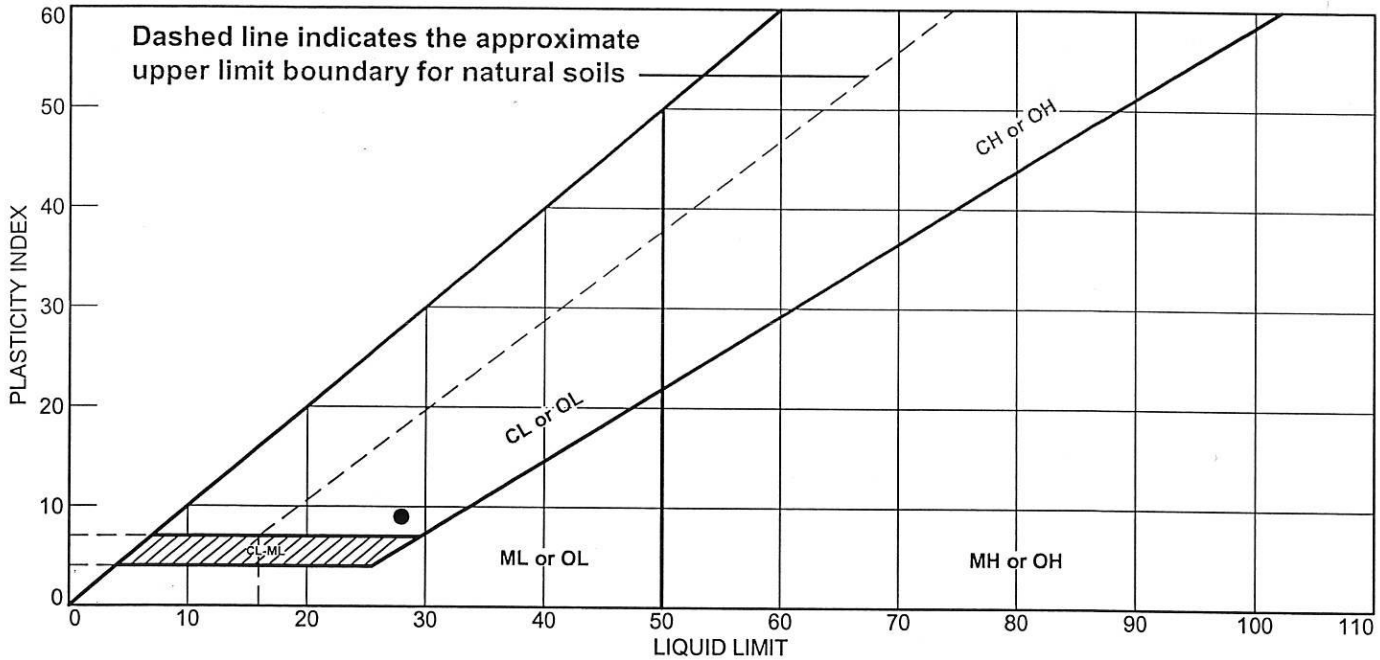

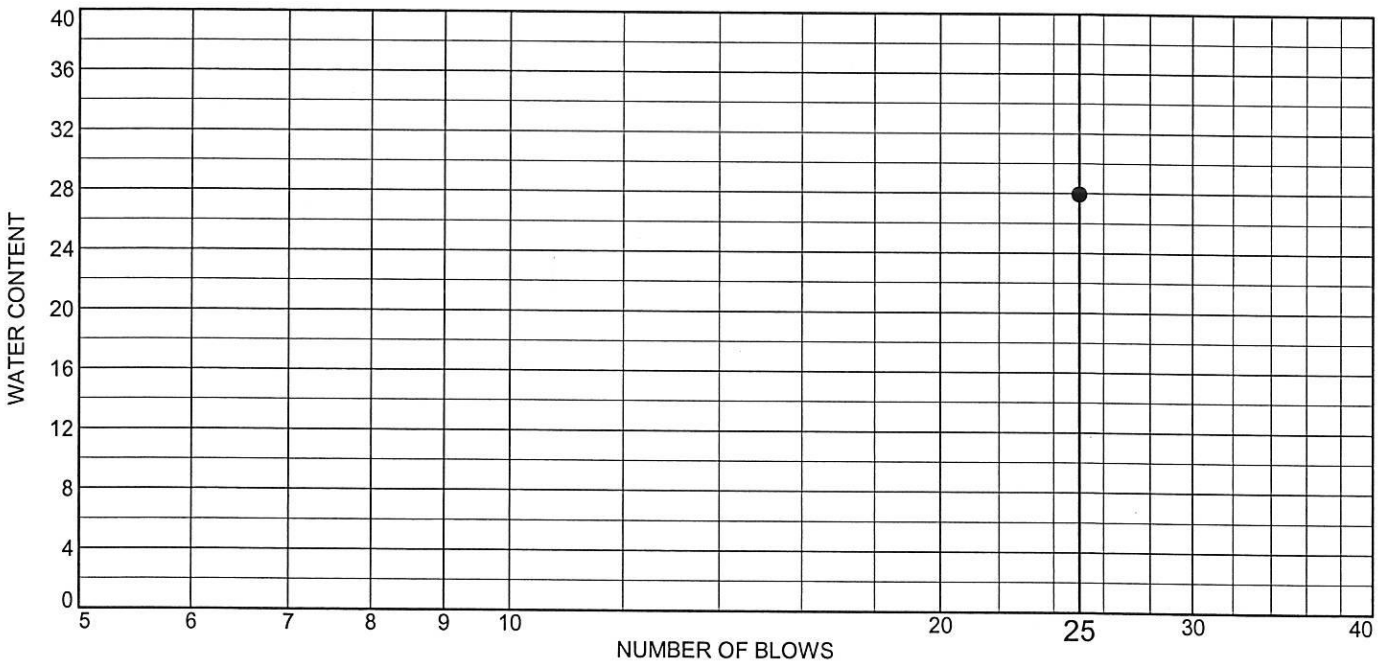

	MATERIAL DESCRIPTION	LL	PL	PI	%<#40	%<#200	USCS
●	FILL: Brown sandy lean clay with gravel and glass fragments	28	19	9			CL

Project No. N4125218 **Client:** Vrable Land Holding Massilon, LLC

Project: Vrable Healthcare Center - Dublin, OH

Source of Sample: B-2 **Depth:** 6.0'-7.5'
Sample Number: S-3

Remarks:
● Lab No. 1172
Date: 12-28-12

TERRACON CONSULTANTS, INC.

Columbus, Ohio

Exhibit B-2

City of Dublin OHIO, USA
Approved for Construction
BP13-00400040
04/12/13

Tested By: DS Checked By: AM

LIQUID AND PLASTIC LIMITS TEST REPORT

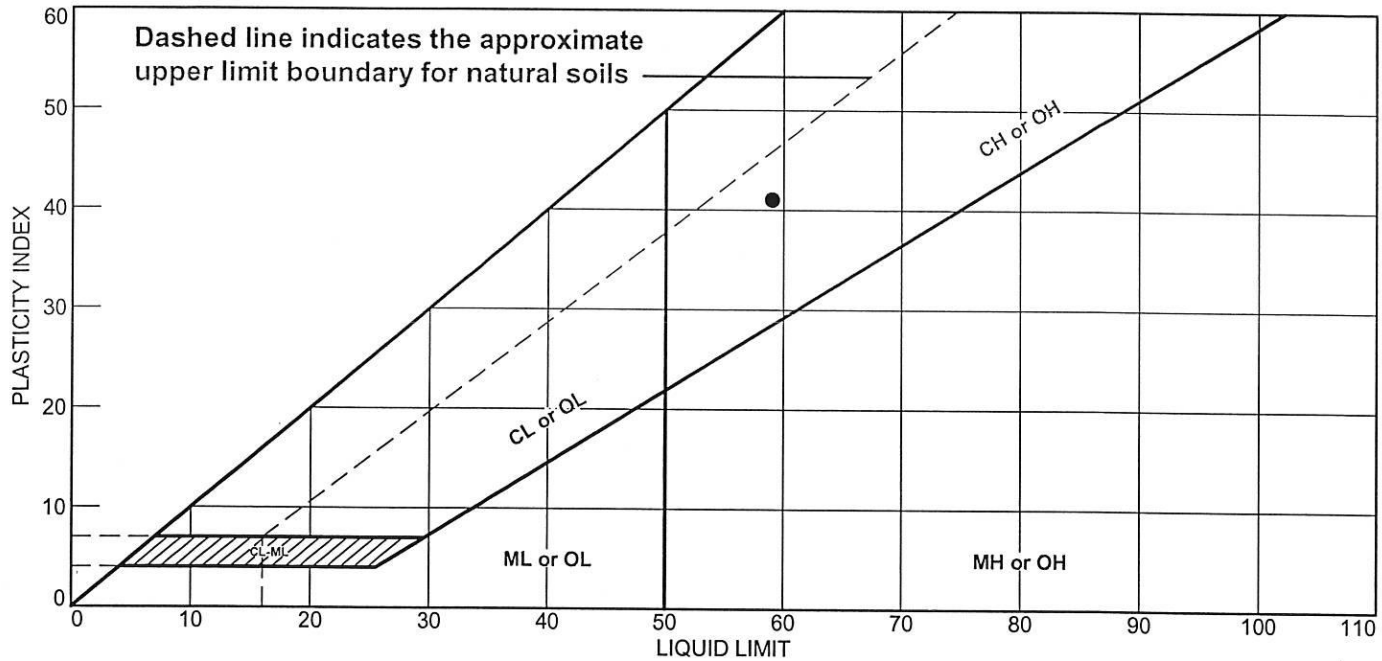

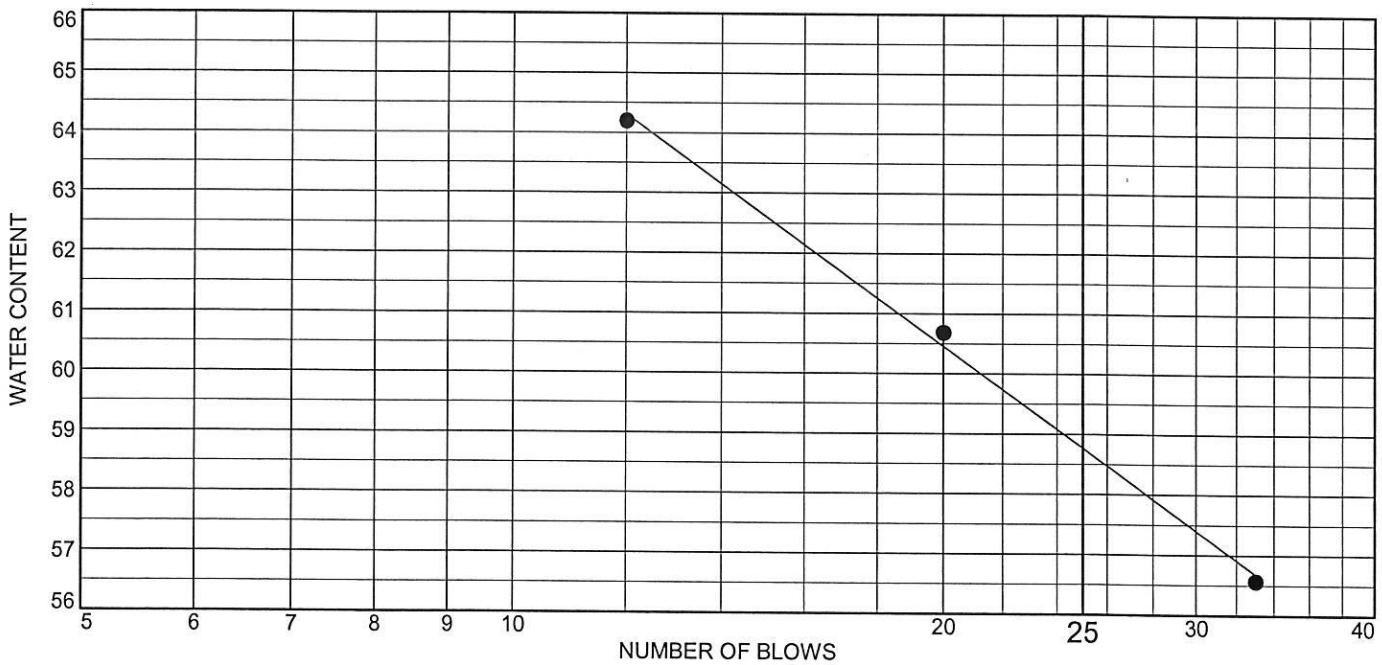

	MATERIAL DESCRIPTION	LL	PL	PI	%<#40	%<#200	USCS
●	Brown FAT CLAY, trace gravel	59	18	41			CH

Project No. N4125218 **Client:** Vrable Land Holding Massilon, LLC

Project: Vrable Healthcare Center - Dublin, OH

Source of Sample: B-11 **Depth:** 3.5'-5.0'
Sample Number: S-2

Remarks:
● Lab No. 1173
Date: 12-28-12

TERRACON CONSULTANTS, INC.

Columbus, Ohio

Exhibit B-3

Tested By: DS Checked By: AM

City of Dublin OHIO, USA
Approved for Construction
BP13-00400040
04/12/13

LIQUID AND PLASTIC LIMITS TEST REPORT

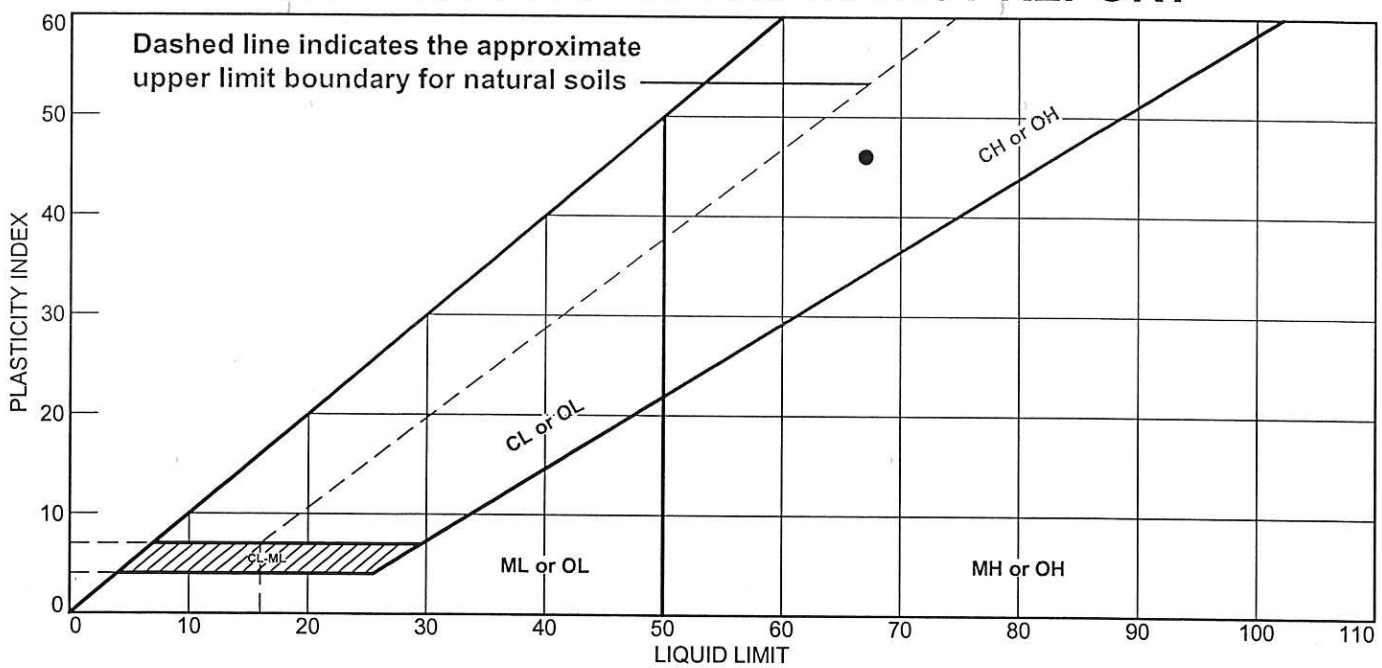

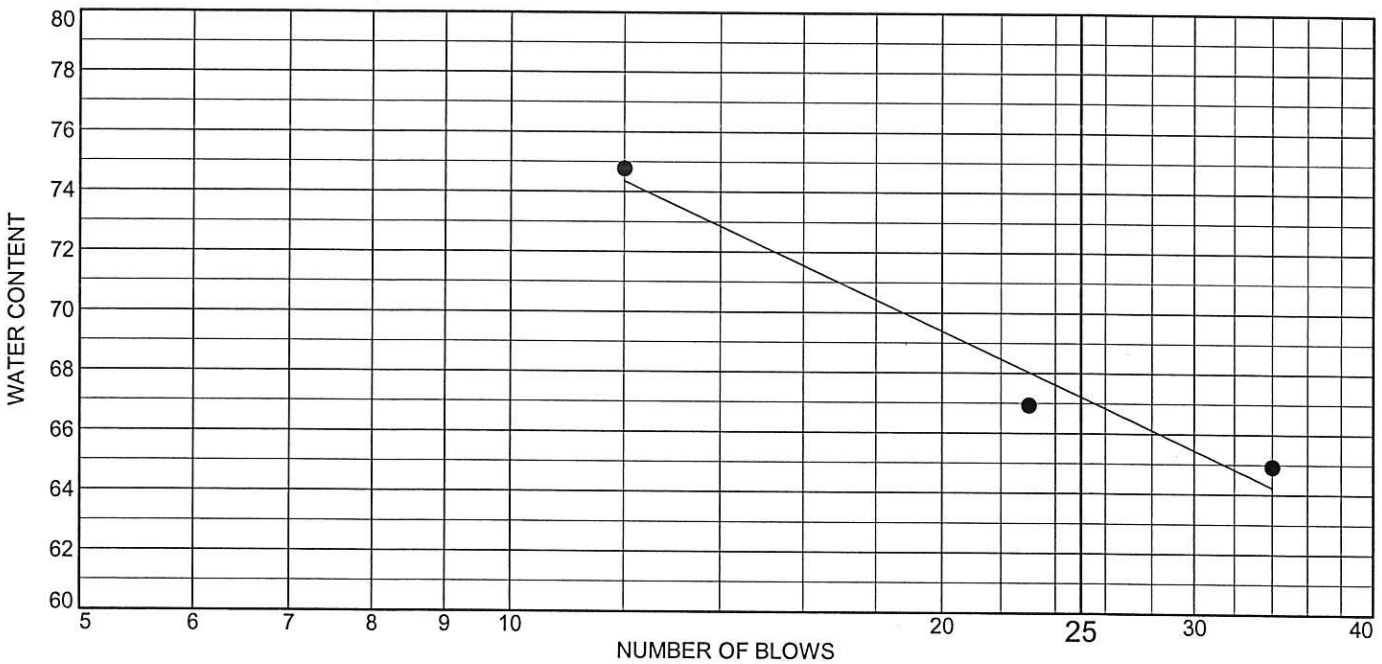

	MATERIAL DESCRIPTION	LL	PL	PI	%<#40	%<#200	USCS
●	Brown FAT CLAY, trace sand	67	21	46			CH

Project No. N4125218 **Client:** Vrable Land Holding Massilon, LLC

Project: Vrable Healthcare Center - Dublin, OH

Source of Sample: P-1 **Depth:** 1.0'-2.5'

Sample Number: S-1

Remarks:

● Lab No. 1174
Date: 12-28-12

TERRACON CONSULTANTS, INC.

Columbus, Ohio

Exhibit B-4

Tested By: DS Checked By: AM

City of Dublin OHIO, USA
Approved for Construction
BP13-00400040
04/12/13

APPENDIX C
SUPPORTING DOCUMENTS

City of Dublin
OHIO, USA
Approved for Construction
BP13-00400040
04/12/13

GENERAL NOTES

DESCRIPTION OF SYMBOLS AND ABBREVIATIONS

SAMPLING

Auger	Split Spoon
Shelby Tube	Macro Core
Ring Sampler	Rock Core
Grab Sample	No Recovery

WATER LEVEL

- Water Initially Encountered
- Water Level After a Specified Period of Time
- Water Level After a Specified Period of Time

Water levels indicated on the soil boring logs are the levels measured in the borehole at the times indicated. Groundwater level variations will occur over time. In low permeability soils, accurate determination of groundwater levels is not possible with short term water level observations.

FIELD TESTS

(HP)	Hand Penetrometer
(T)	Torvane
(b/f)	Standard Penetration Test (blows per foot)
(PID)	Photo-Ionization Detector
(OVA)	Organic Vapor Analyzer

DESCRIPTIVE SOIL CLASSIFICATION

Soil classification is based on the Unified Soil Classification System. Coarse Grained Soils have more than 50% of their dry weight retained on a #200 sieve; their principal descriptors are: boulders, cobbles, gravel or sand. Fine Grained Soils have less than 50% of their dry weight retained on a #200 sieve; they are principally described as clays if they are plastic, and silts if they are slightly plastic or non-plastic. Major constituents may be added as modifiers and minor constituents may be added according to the relative proportions based on grain size. In addition to gradation, coarse-grained soils are defined on the basis of their in-place relative density and fine-grained soils on the basis of their consistency.

LOCATION AND ELEVATION NOTES

Unless otherwise noted, Latitude and Longitude are approximately determined using a hand-held GPS device. The accuracy of such devices is variable. Surface elevation data annotated with +/- indicates that no actual topographical survey was conducted to confirm the surface elevation. Instead, the surface elevation was approximately determined from topographic maps of the area.

STRENGTH TERMS

RELATIVE DENSITY OF COARSE-GRAINED SOILS (More than 50% retained on No. 200 sieve.) Density determined by Standard Penetration Resistance Includes gravels, sands and silts.			CONSISTENCY OF FINE-GRAINED SOILS (50% or more passing the No. 200 sieve.) Consistency determined by laboratory shear strength testing, field visual-manual procedures or standard penetration resistance				BEDROCK		
Descriptive Term (Density)	Standard Penetration or N-Value Blows/Ft.	Ring Sampler Blows/Ft.	Descriptive Term (Consistency)	Unconfined Compressive Strength, Qu, psf	Standard Penetration or N-Value Blows/Ft.	Ring Sampler Blows/Ft.	Ring Sampler Blows/Ft.	Standard Penetration or N-Value Blows/Ft.	Descriptive Term (Consistency)
Very Loose	0 - 3	0 - 6	Very Soft	less than 500	0 - 1	< 3	< 30	< 20	Weathered
Loose	4 - 9	7 - 18	Soft	500 to 1,000	2 - 4	3 - 4	30 - 49	20 - 29	Firm
Medium Dense	10 - 29	19 - 58	Medium-Stiff	1,000 to 2,000	4 - 8	5 - 9	50 - 89	30 - 49	Medium Hard
Dense	30 - 50	59 - 98	Stiff	2,000 to 4,000	8 - 15	10 - 18	90 - 119	50 - 79	Hard
Very Dense	> 50	≥ 99	Very Stiff	4,000 to 8,000	15 - 30	19 - 42	> 119	>79	Very Hard
			Hard	> 8,000	> 30	> 42			

RELATIVE PROPORTIONS OF SAND AND GRAVEL

Descriptive Term(s) of other constituents	Percent of Dry Weight
Trace	< 15
With	15 - 29
Modifier	> 30

GRAIN SIZE TERMINOLOGY

Major Component of Sample	Particle Size
Boulders	Over 12 in. (300 mm)
Cobbles	12 in. to 3 in. (300mm to 75mm)
Gravel	3 in. to #4 sieve (75mm to 4.75 mm)
Sand	#4 to #200 sieve (4.75mm to 0.075mm
Silt or Clay	Passing #200 sieve (0.075mm)

RELATIVE PROPORTIONS OF FINES

Descriptive Term(s) of other constituents	Percent of Dry Weight
Trace	< 5
With	5 - 12
Modifier	> 12

PLASTICITY DESCRIPTION

Term	Plasticity Index
Non-plastic	0
Low	1 - 10
Medium	11 - 30
High	> 30

Terracon

City of Dublin OHIO, USA
Approved for Construction
BPE31-0010040
04/12/13

UNIFIED SOIL CLASSIFICATION SYSTEM

Criteria for Assigning Group Symbols and Group Names Using Laboratory Tests [A]					Soil Classification	
					Group Symbol	Group Name [B]
Coarse Grained Soils: More than 50% retained on No. 200 sieve	**Gravels:** More than 50% of coarse fraction retained on No. 4 sieve	**Clean Gravels:** Less than 5% fines [C]	$Cu \geq 4$ and $1 \leq Cc \leq 3$ [E]		GW	Well-graded gravel [F]
			$Cu < 4$ and/or $1 > Cc > 3$ [E]		GP	Poorly graded gravel [F]
		Gravels with Fines: More than 12% fines [C]	Fines classify as ML or MH		GM	Silty gravel [F,G,H]
			Fines classify as CL or CH		GC	Clayey gravel [F,G,H]
	Sands: 50% or more of coarse fraction passes No. 4 sieve	**Clean Sands:** Less than 5% fines [D]	$Cu \geq 6$ and $1 \leq Cc \leq 3$ [E]		SW	Well-graded sand [I]
			$Cu < 6$ and/or $1 > Cc > 3$ [E]		SP	Poorly graded sand [I]
		Sands with Fines: More than 12% fines [D]	Fines classify as ML or MH		SM	Silty sand [G,H,I]
			Fines classify as CL or CH		SC	Clayey sand [G,H,I]
Fine-Grained Soils: 50% or more passes the No. 200 sieve	**Silts and Clays:** Liquid limit less than 50	**Inorganic:**	PI > 7 and plots on or above "A" line [J]		CL	Lean clay [K,L,M]
			PI < 4 or plots below "A" line [J]		ML	Silt [K,L,M]
		Organic:	Liquid limit - oven dried	< 0.75	OL	Organic clay [K,L,M,N]
			Liquid limit - not dried			Organic silt [K,L,M,O]
	Silts and Clays: Liquid limit 50 or more	**Inorganic:**	PI plots on or above "A" line		CH	Fat clay [K,L,M]
			PI plots below "A" line		MH	Elastic Silt [K,L,M]
		Organic:	Liquid limit - oven dried	< 0.75	OH	Organic clay [K,L,M,P]
			Liquid limit - not dried			Organic silt [K,L,M,Q]
Highly organic soils:	Primarily organic matter, dark in color, and organic odor				PT	Peat

[A] Based on the material passing the 3-inch (75-mm) sieve
[B] If field sample contained cobbles or boulders, or both, add "with cobbles or boulders, or both" to group name.
[C] Gravels with 5 to 12% fines require dual symbols: GW-GM well-graded gravel with silt, GW-GC well-graded gravel with clay, GP-GM poorly graded gravel with silt, GP-GC poorly graded gravel with clay.
[D] Sands with 5 to 12% fines require dual symbols: SW-SM well-graded sand with silt, SW-SC well-graded sand with clay, SP-SM poorly graded sand with silt, SP-SC poorly graded sand with clay

[E] $Cu = D_{60}/D_{10}$ $\quad Cc = \dfrac{(D_{30})^2}{D_{10} \times D_{60}}$

[F] If soil contains ≥ 15% sand, add "with sand" to group name.
[G] If fines classify as CL-ML, use dual symbol GC-GM, or SC-SM.
[H] If fines are organic, add "with organic fines" to group name.
[I] If soil contains ≥ 15% gravel, add "with gravel" to group name.
[J] If Atterberg limits plot in shaded area, soil is a CL-ML, silty clay.
[K] If soil contains 15 to 29% plus No. 200, add "with sand" or "with gravel," whichever is predominant.
[L] If soil contains ≥ 30% plus No. 200 predominantly sand, add "sandy" to group name.
[M] If soil contains ≥ 30% plus No. 200, predominantly gravel, add "gravelly" to group name.
[N] PI ≥ 4 and plots on or above "A" line.
[O] PI < 4 or plots below "A" line.
[P] PI plots on or above "A" line.
[Q] PI plots below "A" line.

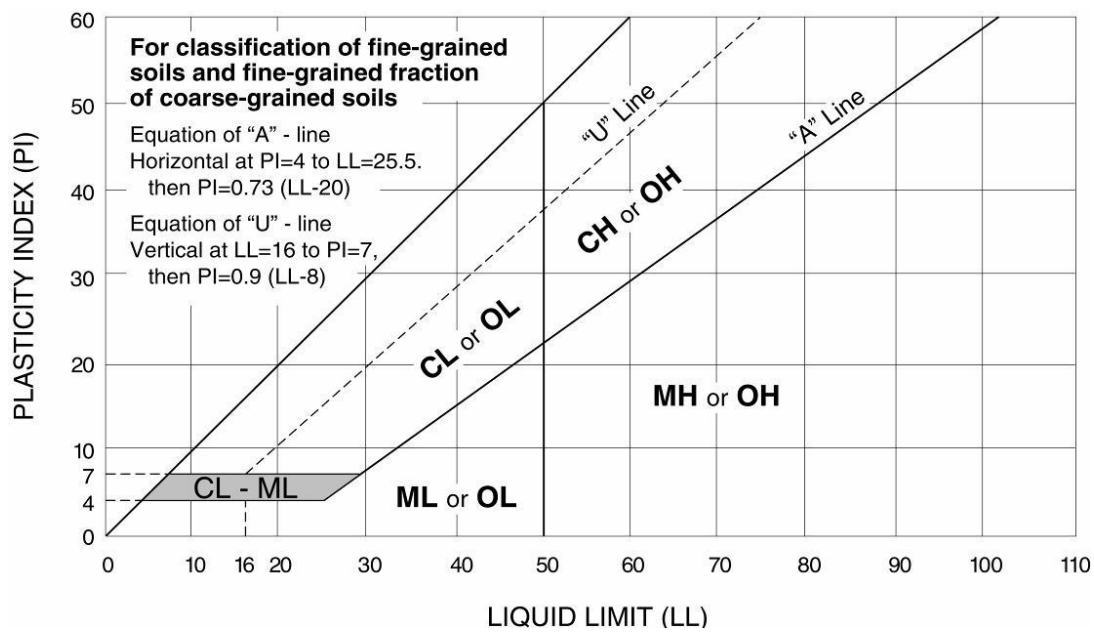

Terracon

Exhibit C-2

City of Dublin OHIO, USA
Approved for Construction
BP13-00400040
04/12/13

DESCRIPTION OF ROCK PROPERTIES

WEATHERING

Fresh	Rock fresh, crystals bright, few joints may show slight staining. Rock rings under hammer if crystalline.
Very slight	Rock generally fresh, joints stained, some joints may show thin clay coatings, crystals in broken face show bright. Rock rings under hammer if crystalline.
Slight	Rock generally fresh, joints stained, and discoloration extends into rock up to 1 in. Joints may contain clay. In granitoid rocks some occasional feldspar crystals are dull and discolored. Crystalline rocks ring under hammer.
Moderate	Significant portions of rock show discoloration and weathering effects. In granitoid rocks, most feldspars are dull and discolored; some show clayey. Rock has dull sound under hammer and shows significant loss of strength as compared with fresh rock.
Moderately severe	All rock except quartz discolored or stained. In granitoid rocks, all feldspars dull and discolored and majority show kaolinization. Rock shows severe loss of strength and can be excavated with geologist's pick.
Severe	All rock except quartz discolored or stained. Rock "fabric" clear and evident, but reduced in strength to strong soil. In granitoid rocks, all feldspars kaolinized to some extent. Some fragments of strong rock usually left.
Very severe	All rock except quartz discolored or stained. Rock "fabric" discernible, but mass effectively reduced to "soil" with only fragments of strong rock remaining.
Complete	Rock reduced to "soil". Rock "fabric" not discernible or discernible only in small, scattered locations. Quartz may be present as dikes or stringers.

HARDNESS (for engineering description of rock – not to be confused with Moh's scale for minerals)

Very hard	Cannot be scratched with knife or sharp pick. Breaking of hand specimens requires several hard blows of geologist's pick.
Hard	Can be scratched with knife or pick only with difficulty. Hard blow of hammer required to detach hand specimen.
Moderately hard	Can be scratched with knife or pick. Gouges or grooves to ¼ in. deep can be excavated by hard blow of point of a geologist's pick. Hand specimens can be detached by moderate blow.
Medium	Can be grooved or gouged 1/16 in. deep by firm pressure on knife or pick point. Can be excavated in small chips to pieces about 1-in. maximum size by hard blows of the point of a geologist's pick.
Soft	Can be gouged or grooved readily with knife or pick point. Can be excavated in chips to pieces several inches in size by moderate blows of a pick point. Small thin pieces can be broken by finger pressure.
Very soft	Can be carved with knife. Can be excavated readily with point of pick. Pieces 1-in. or more in thickness can be broken with finger pressure. Can be scratched readily by fingernail.

Joint, Bedding, and Foliation Spacing in Rock [a]

Spacing	Joints	Bedding/Foliation
Less than 2 in.	Very close	Very thin
2 in. – 1 ft.	Close	Thin
1 ft. – 3 ft.	Moderately close	Medium
3 ft. – 10 ft.	Wide	Thick
More than 10 ft.	Very wide	Very thick

a. Spacing refers to the distance normal to the planes, of the described feature, which are parallel to each other or nearly so.

Rock Quality Designator (RQD) a

RQD, as a percentage	Diagnostic description
Exceeding 90	Excellent
90 – 75	Good
75 – 50	Fair
50 – 25	Poor
Less than 25	Very poor

a. RQD (given as a percentage) = length of core in pieces 4 in. and longer/length of run.

Joint Openness Descriptors

Openness	Descriptor
No Visible Separation	Tight
Less than 1/32 in.	Slightly Open
1/32 to 1/8 in.	Moderately Open
1/8 to 3/8 in.	Open
3/8 in. to 0.1 ft.	Moderately Wide
Greater than 0.1 ft.	Wide

References: American Society of Civil Engineers. Manuals and Reports on Engineering Practice - No. 56. Subsurface Investigation for Design and Construction of Foundations of Buildings. New York: American Society of Civil Engineers, 197[illegible]. U.S. Department of the Interior, Bureau of Reclamation, Engineering Geology Field Manual.

Terracon

Exhibit C-3

City of Dublin OHIO, USA
Approved for Construction
BP13-00400040
04/12/13

BEDROCK CONTOURS FROM S&ME BORINGS

BRIDGE STREET CIVIC CORE

PRELIMINARY – NOT FOR CONSTRUCTION

SUBSURFACE INVESTIGATION
SR 161 & RIVERSIDE DRIVE INTERSECTION IMPROVEMENTS
DUBLIN, FRANKLIN COUNTY, OHIO

S&ME Project No. 1171-13-042A

Report to:

EMH&T, Inc.
Columbus, Ohio

Prepared by:

S&ME

6190 Enterprise Ct.
Dublin, Ohio 43016

October 2013 (Issued)
November 2013 (Revised)

October 15, 2013 (Issue date)
November 12, 2013 (Revised date)
1171-13-042A

EMH&T, Inc.
5500 New Albany Road
Columbus, Ohio 43054

Attention: Mr. Michael Brehm, P.E.

Reference: **Subsurface Investigation – Revised**
SR 161 & Riverside Drive Intersection Improvements
Dublin, Franklin County, Ohio

Dear Mr. Brehm:

In accordance with our proposal dated July 15, 2013, which was authorized with EMH&T's Standard Sub-Contract agreement signed on August 28, 2013, S&ME, Inc. (S&ME) has completed the Geotechnical Investigation for the State Route 161 and Riverside Drive Intersection Improvements project in Dublin, Ohio. This report contains the information obtained from the borings, as well as a pavement subgrade evaluation for design and construction of the roadway.

This report is being reissued to reflect the following revisions:

- Updated boring elevations for 11 of the 20 borings based on survey performed by EMH&T following submission of the report; and,
- Boring B-214 was incorrectly labeled as being located at the proposed pedestrian underpass. Based on historic Boring B-28, recommendations for this structure remain unchanged.

We appreciate having been given the opportunity to be of service. Please do not hesitate to contact our office if you have any questions concerning our report.

Respectfully submitted,

S&ME, Inc.
Columbus, Ohio

STATE OF OHIO
CHRISTOPHER J. NYE
11-12-13
E-77034
REGISTERED PROFESSIONAL ENGINEER

Christopher J. Nye, P.E.
Project Engineer

Ronald T. Erb
Senior Reviewer

Submitted: 1 Electronic Copy (pdf) to Mr. Michael Brehm, P.E. (mbrehm@emht.com)

S&ME, INC. / 6190 Enterprise Court / Dublin, Ohio 43016 / *p* 614.793.2226 *f* 614.793.2410 / www.smeinc.com

TABLE OF CONTENTS

1. INTRODUCTION 3
2. SITE AND PROJECT DESCRIPTION 3
3. REGIONAL GEOLOGY 4
4. EXISTING INFORMATION 4
5. EXPLORATION 4
5.1 Field Investigation 4
5.2 Laboratory Testing 6
5.2.1 Results of Soil Classification Testing 6
5.2.2 Results of Moisture Testing 7
6. FINDINGS 7
6.1 Existing Pavement 7
6.2 General Subsurface Stratigraphy 7
6.2.1 Base Investigation 7
6.2.2 Preliminary Park Investigation 8
6.3 Groundwater Observations 9
7. ANALYSIS AND RECOMMENDATIONS 9
7.1 Roadway Embankment Construction 9
7.1.1 Embankment Foundation/Subgrade Preparation 9
7.1.2 “Fill” Areas 10
7.1.3 “At-Grade” and “Cut” Areas 10
7.1.4 Borrow Soil and Backfill Compaction Recommendations 11
7.1.5 Yielding Subgrade 12
7.2 Pavement Subgrade Evaluation 13
7.3 Pedestrian Underpass Recommendations 14
7.3.1 Shallow Foundation Bearing Resistance 14
7.3.2 Eccentricity (Overturning) 15
7.3.3 Sliding Resistance 15
7.3.4 Construction and Groundwater Considerations 16
7.3.5 Lateral Earth Pressures 16
7.4 Groundwater Considerations 17
8. FINAL CONSIDERATIONS 18

APPENDIX

Plate No.

Vicinity Map 1
Plan of Borings 2
Explanation of Symbols and Terms Used on Boring Logs for Soil and Rock ..... 3 and 4
Boring Logs ..... 5 through 24
Asphalt Core Photographs 25
Rock Core Photographs 26
Summary of Laboratory Test Results ..... 27 and 28
Atterberg Limits' Results 29
Gradation Curves ..... 30 through 47
Unconfined Compression Test Results ..... 48 through 50
Historic Boring Logs ..... 51 through 61

1. INTRODUCTION

S&ME, Inc. (S&ME) has completed the subsurface investigation for the proposed State Route 161 and Riverside Drive intersection improvements in Dublin, Ohio. These improvements are part of the City of Dublin's Bridge Street Corridor development. The work was performed in general accordance with our proposal dated July 15, 2013. The purpose of this investigation was to obtain subsurface information to allow us to characterize the subsurface conditions and to evaluate pavement subgrade conditions for pavement design to be performed by others. This report describes our understanding of the project, presents the results of the field exploration and laboratory testing, and discusses our conclusions and recommendations.

As requested by EMH&T, this investigation was not performed in strict accordance with ODOT's Specifications for Geotechnical Explorations (SGE). S&ME understands that the project documents will reference ODOT specifications for roadway construction; therefore we have included reference to ODOT Construction and Materials Specifications (CMS) in our report.

2. SITE AND PROJECT DESCRIPTION

Based on the Survey Scope Exhibit provided by EMH&T and showing requested boring and core locations, S&ME understands that the project will include:

- Construction of a new round-a-bout at the intersection of SR 161 and Riverside Drive. The new round-a-bout will be located approximately 125 feet to the east of the existing intersection;
- Realignment of Riverside Drive between SR 161 and Tuller Drive up to 250 feet to the east;
- Intersection modification of Riverside Drive with Dale Drive and Tuller Drive; and,
- A possible pedestrian tunnel beneath the realigned Riverside Drive.

The Bridge Street Corridor project includes substantial development within the project vicinity. As part of this investigation, S&ME was requested to perform preliminary borings for the following proposed developments. However, these explorations were for data collection only, and specific recommendations pertaining to design and construction of the proposed park facilities were not included in our authorized scope of work.

- Construction of new public park facilities along the existing Riverside Drive alignment, including a pedestrian bridge crossing the Scioto River and an overlook; and,
- Cul-de-sac extension to the north and south of North Riverview Street.

Based on preliminary plan and profile information provided by EMH&T for the realigned Riverside Drive between Dale Drive and Tuller Road (approximate STA 108+70 to STA 133+50), new vertical roadway alignment will require up to 10 feet of new fill to obtain

the anticipated roadway grades. Plan and profile information for the proposed roundabout was not available at the time of this report; however, it is our present understanding that the intersection will move to the east and be significantly higher in elevation than the present intersection.

The existing Riverside Drive and SR 161 within the project limits generally consists of four lanes. The new public park area presently consists of heavily wooded and steep banks along the Scioto River and includes a portion of the existing Riverside Drive. Existing development along the realigned portion of Riverside Drive includes, from the south to the north: the Bridge Point Shopping center with retail buildings and parking lot; commercial office buildings and associated parking; a former golf driving range with restaurant; and vacant lots with concrete parking lots.

3. REGIONAL GEOLOGY

Geologic references indicate that this site is located in a portion of Ohio which has been glaciated. The Columbus Lowland area is surrounded in all directions by relative uplands, having a broad regional slope toward the Scioto Valley with many larger streams. The overburden soils consist of predominantly loamy Wisconsinan-age till and extensive outwash in the Scioto Valley over deep Devonian to Mississippian-age carbonate rocks, shales, and siltstones. Shale bedrock is located at relatively shallow depths in this region at higher elevations and limestone bedrock is located at relatively shallow depths in the lower elevations near the Scioto River.

4. EXISTING INFORMATION

S&ME (formerly BBC&M) has significant experience in this area and has drilled borings for a number of projects in the vicinity of the site. These include investigations performed for FRA-270-22842, Emerald Parkway extension, Wendy's/Riverside Drive storm water improvements, Dale Center development, Old Dublin Stormwater Sewer project, A Touch of Class car wash, and Riverside Drive Area Improvements. The existing boring information indicates that limestone bedrock is present at depths ranging from 3.5 feet to greater than 15 feet below existing grade. Selected boring logs from previous investigations near the project site were used to supplement the current investigation. Copies of these boring logs are provided as Plates 51 through 61 in the Appendix.

S&ME also accessed the ODOT Office of Geotechnical Engineering's on-line Geotechnical Document Management System to search for any existing historical geotechnical explorations within the limits of this project; however, no existing additional information could be located.

5. EXPLORATION

5.1 Field Investigation

Between September 9 and September 22, 2013, S&ME was on-site and performed a total of twenty (20) borings and four (4) pavement cores. The approximate locations of the

borings are shown on the Plan of Borings submitted as Plate 2 in the Appendix of this report. The boring program consisted of the following:

Base Investigation

- Eight (8) borings (B-202, B-203, B-204, B-205, B-206, B-209, B-217, and B-218) along the existing SR 161 or Riverside Drive alignments;
- Seven (7) borings (B-208, B-210, B-211, B-213, B-214, B-215, and B-216) along the new, realigned portion of Riverside; and,
- Four (4) pavement cores (X-201, X-207, B-212, and X-219) within SR 161 and Riverside Drive obtained using a hand operated, generator-driven core machine.

Preliminary Park Investigation

- Two (2) borings (B-220 and B-221) for the North Riverview Street cul-de-sac extensions;
- Two (2) borings (B-222 and B-223) for the proposed pedestrian bridge crossing the Scioto River; and,
- One (1) boring (B-212) near the proposed overlook structure.

EMH&T staked locations for Borings B-212, B-214, B-216, and B-222, along with centerline stakes for the proposed Riverside Drive realignment. The remaining borings were located in the field by S&ME. The final boring locations were staked in the field by S&ME and adjusted based on existing utilities and drill rig accessibility; therefore the locations should be considered approximate. Following submission of our report, EMH&T performed additional surveying at the site and provided S&ME with surveyed ground surface elevations for 11 of the 20 borings, specifically Borings B-205, B-208, B-210, B-211, B-213, B-214, B-215, B-216, B-217, B-218, and B-223. The remaining boring elevations were estimated from available topographic information.

With the exception of Boring B-222, a truck-mounted drill rig using a 4½-inch outside diameter (O.D.) continuous-flight auger was used to advance the borings between sampling attempts. Due to accessibility challenges, a drill rig mounted on an All-Terrain Vehicle (ATV) chassis using a 3¼-inch inside diameter (I.D.) hollow-stem auger was used to perform Boring B-222. At regular intervals, disturbed but representative soil samples were obtained by lowering a 2-inch O.D. split-barrel sampler to the bottom of the boring and then driving the sampler into the soil with blows from a 140-pound hammer freely falling 30 inches (Standard Penetration Test, ASTM D1586).

Once auger refusal was encountered on the apparent bedrock surface in selected borings, a changeover to rotary drilling techniques was made in Borings B-210, B-214, B-222 and B-223. Five (5) to ten (10) feet of bedrock core was obtained in these borings using an N-sized wire line (Q) rock core barrel and diamond core bit using water as a circulating/ cooling fluid.

In the field, experienced personnel performed the following: 1) examined all samples recovered from the borings; 2) preserved representative portions of all samples in airtight glass jars or compartmented boxes; 3) prepared a log of each boring; 4) made seepage

and groundwater observations; 5) made hand-penetrometer measurements in specimens exhibiting cohesion; and, 6) provided liaison between the field work and the undersigned Project Engineer so that the exploration program could be modified in the event unusual or unexpected subsurface conditions were encountered.

At the completion of drilling, the borings the borings were backfilled with soil cuttings, and where borings were performed within pavement, the existing pavement surface was repaired with an equivalent thickness of cold-patch asphalt. All recovered samples were transported to S&ME's soils laboratory for further examination and testing.

5.2 Laboratory Testing

In the laboratory, the samples were visually identified and on a few representative samples, moisture contents, liquid and plastic limit determinations, and grain size analyses were performed. Results of these tests permit an evaluation of strength and subgrade support characteristics of the soil by comparison with similar soils for which these characteristics have been previously determined.

Based upon the results of the laboratory testing program, soil descriptions contained on the field logs were modified, if necessary, and laboratory-corrected logs are submitted as Plates 5 through 24 of the Appendix. Results of the laboratory tests are shown graphically on the individual boring logs and a summary of test results is presented on Plates 27 through 29 of the Appendix. Results of grain size analyses are presented on Plates 30 through 47.

In addition to the above index tests, three (3) unconfined compressive strength (UCS) tests were also performed on portions of the recovered limestone rock cores, with photographs of the recovered cores included as Plate 26 of the Appendix, and the results of the UCS tests included as Plates 48 through 50.

Soils described in this report have been classified generally in accordance with the Unified Soil Classification System. However, the system has been augmented by the use of special adjectives to designate the approximate percentages of minor soil components. An explanation of the symbols and terms used on the boring logs and definitions of the special adjectives used to denote the minor soil and rock components are presented on Plates 3 and 4 of the Appendix.

5.2.1 Results of Soil Classification Testing

Atterberg limit testing was performed to provide engineering classifications of the on-site soils exhibiting cohesion. A total of seventeen (17) Atterberg limits were performed with liquid limits ranging from 21 to 67 percent, and plasticity indices ranging from 4 to 45 percent for the soils tested. One additional sample was determined to be non-plastic. In addition, grain size distribution analyses were performed on the same eighteen (18) samples, with percentage of material finer than the No. 200 sieve ranging from 24.9 to 89.5 percent.

5.2.2 Results of Moisture Testing

Natural moisture content testing was performed on a total of eighteen (18) soil samples. The moisture contents of the on-site soils tested ranged from 5 to 28 percent. These values varied from 10 percent below to 5 percent above their corresponding plastic limit.

6. FINDINGS

Please refer to the boring logs submitted in the Appendix for information on the soil and groundwater/seepage conditions encountered at the boring locations. Inferences should not be made to the subsurface conditions in the areas between or away from the borings without performance of additional borings as well as field verification.

6.1 Existing Pavement

The existing pavement sections encountered in the borings and pavement cores are summarized in Table 1 below. Photographs of the asphalt cores are included in the Appendix on Plate 25.

Table 1: Existing Pavement Thicknesses

Boring No.	Existing Asphalt Thickness (in)	Existing Granular Base Thickness (in)
X-201	11½	--
B-202	11	6
B-205	5	6
B-206	13	5
X-207	13	--
B-209	7	5
B-210	3	8
B-211	6	6
B-212*	8½	2
B-217	12	6
B-218	12	4
X-219	15½	--
B-220	4	5
B-221	3	7
B-223	7	5

* Pavement Core X-212 was performed in combination with Boring B-212.

6.2 General Subsurface Stratigraphy

6.2.1 Base Investigation

<u>SR 161 / Riverside Drive Intersection</u>

Borings performed near the intersection of SR 161 and Riverside encountered either existing pavement consisting of 5 to 13 inches of asphalt and 5 to 6 inches of granular

base, or topsoil ranging in thickness from 2 to 4 inches. Beneath the surficial materials, natural soils generally consisted of medium-dense to very-dense gravel with Borings B-202, B-205, and B-209 containing layers of medium-stiff to very-stiff cohesive soil (silty clay). With the exception of Boring B-205, the borings terminated at auger refusal on limestone bedrock at depths ranging from 2.2 to 8.6 feet below existing grades. Boring B-205 was terminated at the planned depth of 10.0 feet after penetrating 2.0 feet into medium-stiff to stiff silty clay.

Riverside Drive Realignment

Beneath existing pavement of 3 to 12 inches of asphalt and 4 to 8 inches of granular base, or beneath 2 to 3 inches of topsoil, the borings along the Riverside Drive realignment encountered natural soils consisting of discontinuous layers of granular and cohesive material. The granular material was generally described as medium-dense to very-dense sand and/or gravel, with very-loose to loose zones encountered in Borings B-208, and B-218. The cohesive (silty clay) soils were very-stiff to hard, with medium-stiff zones encountered near the surface in Borings B-215 and B-217. Bedrock was encountered at depths ranging from 2.2 to 9.8 feet below grade, and samples of recovered bedrock core in Borings B-210 and B-214 were described as medium-hard, highly fractured gray-brown limestone.

Pedestrian Underpass

Historic boring B-28 was performed near the proposed pedestrian underpass and encountered 6 inches of topsoil overlying 7 feet of existing fill, which was described as stiff to hard silty clay. Beneath the surficial materials, the boring penetrated 2 feet of natural very-stiff silty clay before encountering hard limestone bedrock at an elevation of El. 796.4.

6.2.2 Preliminary Park Investigation

Park Overlook

Boring B-212 was located in the vicinity of the proposed park overlook. This boring was performed in combination with pavement core X-212. Beneath 8.5 inches of asphalt and 2 inches of granular base, 1.2 feet of very-stiff silty clay was underlain by 3.2 feet of very-dense fine to coarse gravel. The boring terminated at auger refusal on limestone bedrock at a depth of 5.5 feet (El. 793.0).

North Riverview Cul-de-sac

Borings B-220 and B-221 were performed near the proposed cul-de-sacs at the south and north ends of North Riverview Street, respectively. Existing asphalt consisted of 3 and 4 inches of asphalt with 7 and 5 inches of granular base, respectively. Each boring encountered approximately 7 feet of existing fill, which was described as either stiff to very-stiff cohesive (silty clay) or very-loose to medium-dense granular (sand and gravel) materials. Beneath the existing fill, Boring B-220 penetrated 0.7 feet of weathered limestone prior to encountering auger refusal on limestone bedrock at a depth of 8.7 feet (El. 794.3). Boring B-221 terminated at the planned depth of 10.0 feet after penetrating 2.0 feet into medium-dense gravel.

Pedestrian Bridge

One boring, B-222, was located near the proposed bridge pier near the Scioto River main channel. This boring encountered 6 inches of topsoil, then 3.2 feet of medium-stiff organic clayey silt, then 5.2 feet of medium-dense to very-dense gravel. Hard limestone bedrock was encountered at a depth of 8.9 feet (El. 753.1). Boring B-223 was located within Riverside Drive near the proposed pedestrian bridge's west abutment and encountered existing pavement consisting of 7 inches of asphalt and 5 inches of granular base. Five (5) feet of very-dense gravel was penetrated before encountering auger refusal at a depth of 6.0 feet on hard limestone containing many horizontal and vertical fractures.

6.3 Groundwater Observations

Groundwater observations were made as each boring was being advanced and measurements were made at the completion of drilling. Groundwater and/or seepage was encountered during drilling in Boring B-222 at the approximate Scioto River elevation. The remaining borings were noted as being "dry," that is to say no measurable amount of water had collected in the borehole prior to backfilling.

7. ANALYSIS AND RECOMMENDATIONS

The following recommendations pertain to the design and construction of the proposed roundabout at SR 161 and Riverside Drive, as well as the proposed realignment of Riverside Drive between SR 161 and Tuller Road. The boring performed as part of the Preliminary Park Investigation were for informational purposes only, and no recommendations were requested for the planned park facilities.

7.1 Roadway Embankment Construction

Preliminary profile information provided by EMH&T indicates that as much as 10 feet of new fill will be necessary to attain the desired profile for the realigned portion of Riverside Drive. Stability analyses were not performed for the proposed embankments.

7.1.1 Embankment Foundation/Subgrade Preparation

Prior to commencing earthwork operations, it is recommended that all existing pavement, structures, sod and topsoil, existing trees including their entire root mass, vegetation, and other miscellaneous materials be completely removed from the entire footprint of the proposed roadway/embankment. Prior to the placement of any new fill for embankment widening, it is recommended that the entire footprint of the widened embankment be exposed and proofrolled in accordance with 2010 ODOT Construction and Material Specifications (CMS) Item 204.06, and Item 204 of the 2009 ODOT Construction Inspection Manual of Procedures, to detect any soft, wet or weak zones that might be present. This is of particular importance in the vicinity of Borings B-215 and B-217 where medium-stiff to stiff soils were encountered at the approximate subgrade level.

If any such zones are present, the materials contained in these zones should be either scarified, dried, and thoroughly recompacted in place in accordance with ODOT Item 203.07, or be removed and the overexcavation filled in a controlled manner with compacted, suitable embankment material (Item 203.02) and the recommendations

presented in this report. S&ME recommends that the Geotechnical Engineer of Record or his/her designated representative be present at the time of proofrolling, as visual observation of these procedures may result in a partial reduction of undercutting of unsuitable soils.

7.1.2 "Fill" Areas

After all unsuitable materials have been removed during the site preparation process, and prior to commencing fill placement, it is recommended that horizontal benches be cut into all existing sloping surfaces to permit placement and compaction of new fill in horizontal lifts. In areas where new fill is to be placed on the side of an existing embankment which is steeper than 4H:1V, S&ME recommends that "Special Benching" procedures as outlined in the ODOT Geotechnical Bulletin GB2, *Special Benching and Sidehill Embankment Fills* (ODOT GB2), dated November 4, 2008, and the 2009 ODOT Construction Inspection Manual of Procedures be utilized.

Sketches illustrating several "typical" Special Benching configurations for sidehill fills on various slopes are included in Figures 1, 2 and 3 on pages 3 and 6 of the ODOT GB2 document. These configurations require a minimum distance of 8 feet between the crest of the bench back-slopes and the face of the new slope to permit compaction and grading equipment to work on a horizontal surface.

During Special Benching procedures, S&ME also recommends the following: 1) only one bench be exposed at any given time and that excavation of the next bench should not be permitted until embankment fill placement and compaction has been completed to the top of the backslope of the previous bench; and, 2) the length of any given bench that is exposed should not exceed the quantity of embankment fill which may be properly placed and compacted in one day. Additionally, S&ME recommends that the final, completed side slopes of embankments be constructed no steeper than 2H:1V.

As stated in the ODOT GB2, wherever "Special Benching" is used, Plan Note G110 from the ODOT L&D Manual, Vol. 3, should be included in the General Notes.

7.1.3 "At-Grade" and "Cut" Areas

- Soil Subgrade

Once the desired subgrade elevation has been attained in "cut" and "at-grade" areas, and after any unsuitable subgrade materials have been overexcavated and properly backfilled, the subgrade soil beneath the entire roadway and shoulder pavement area should be scarified and recompacted to a depth of 12 inches below the subgrade level in accordance with ODOT Item 204.03. During recompaction, the moisture content of the subgrade soil should be maintained or adjusted in accordance with ODOT Item 203.07.A.

Final subgrade proofrolling should be performed in accordance with Item 204.06 of the ODOT Construction and Material Specifications, and Section 204 of the 2006 ODOT Construction Inspection Manual of Procedures. If weak, wet, or soft zones are present, it

is recommended that the materials contained in these zones should be removed and replaced in accordance with Item 204.04. It is recommended, however, that the maximum depth of any necessary overexcavation be limited to 5 feet, even where the bottom remains unstable. In these cases, it is recommended that a geotextile (ODOT Item 712.09, Type D) be placed at the bottom of the overexcavation and then the undercut area backfilled with compacted granular material (ODOT Item 703.16.C Type C or D Granular Material). To assist the paving process, it may be desirable to top this granular backfill with a few inches of Item 703.16.C.2 (Type B).

Following the completion of the scarification, recompaction, and proofrolling of the subgrade in these cut and at-grade areas, it is strongly recommended that construction traffic be restricted from traveling on the compacted subgrade. Cohesive subgrade soils subjected to repetitious construction load and moisture fluctuations, which may occur as a result of exposure to rainfall and/or surface water runoff, may exhibit subgrade instability.

- Bedrock Subgrade

Although none of the boring performed for this investigation encountered bedrock within 2 feet of the proposed Riverside Drive subgrade level, Borings B-206 and B-211 encountered limestone bedrock a depth of 2.2 feet. Preliminary profile information for the proposed roundabout was not available at the time of this report. Because of the wide spacing of the borings, consideration should be given to the possibility that bedrock may be encountered at, or within 2 feet of, the proposed subgrade level.

In accordance with Item 204.05 of the ODOT Construction and Materials Specifications (CMS) the proposed pavement subgrade should be undercut to a depth of two feet below the bottom of the asphalt or concrete pavement. The overexcavation should also extend laterally to at least one foot outside the proposed pavement shoulder. This overexcavated material must be replaced with compacted, suitable embankment material (ODOT CMS Item 204.02) which possesses subgrade support characteristics consistent with the design CBR for the pavement section. S&ME recommends that consideration be given to using ODOT Item 703.16.C.2 Granular Material B (Item 304).

S&ME also recommends that consideration be given to placing a geotextile fabric (ODOT Item 712.09, Type D) at the bottom of subgrade overexcavations in rock prior to backfilling to reduce the potential for loss of backfill material and granular base course into any large fractures or voids that may be present in the limestone bedrock.

Additionally, it must be emphasized that **a direct correlation should not be made between the performance of the drilling rigs and the ability of conventional construction equipment to excavate bedrock at this site.**

7.1.4 Borrow Soil and Backfill Compaction Recommendations

Soil used to backfill any overexcavated subgrade materials or used as fill to attain the design subgrade level should consist of clean inorganic soils free of debris and cobbles,

and should be thoroughly compacted in accordance with ODOT specifications (Item 203, and when within 12 inches of subgrade level, Item 204). Additionally, S&ME recommends that the moisture content of all soil used as fill be maintained within -2% to +2% of the optimum moisture content during all compaction operations. Borrow materials should not be placed in a frozen condition or upon a frozen surface, and any sloping surfaces on which new fill is to be placed should first be benched in accordance with either Item 203.05 or ODOT GB2, depending on the slope of the existing ground surface at each location.

Compaction requirements for the construction of earthen embankments are based on ODOT CMS Item 203.07.B (or Item 204.03 when within 12 inches of subgrade level), which specifies a minimum percent compaction based on the dry unit weight of the type of soil fill being placed as borrow. S&ME recommends that sampling and testing of all proposed borrow material be performed prior to construction to verify that the borrow soils are suitable for the planned construction. Additionally, **all soil used as new fill or backfill within 3 feet of the proposed subgrade level must be capable of providing subgrade support characteristics in a final compacted state that are no less than the value used for the design of new pavement (see "Pavement Subgrade Evaluation" section of this report).**

It should be noted that the cohesive soils encountered in the borings, if exposed to inclement weather or rainfall, may rapidly absorb additional moisture and weaken. It is imperative that these soil types not be exposed to rainfall while in a loosened state (such as during disking and drying for moisture conditioning). Should these materials become sufficiently saturated that additional moisture conditioning is impractical, the material should be removed and wasted. Therefore, it is recommended that moisture conditioning only be performed when extended periods of suitable weather are anticipated, and that only the amount of borrow soil be exposed that may be moisture conditioned and properly compacted during suitable weather periods.

7.1.5 Yielding Subgrade

Laboratory tests performed on the near-surface soils at this site indicate that the anticipated subgrade soils may be considered moderately to highly plastic and sensitive to the effects of moisture and repetitive construction loads. Soil of this type may "fail" (i.e., rut or pump unacceptably) during proofrolling, especially if the subgrade soils become wet and the moisture contents increase. If such yielding does occur, it is imperative that the subgrade be stabilized before a full-depth pavement is constructed, even if an aggregate base is to be used.

Restricting construction activity and permitting the subgrade to dry will frequently eliminate yielding if weather conditions are favorable. If exceptionally good drying weather is not expected or does not occur, however, it will likely be necessary to scarify the subgrade to a depth of eight to twelve inches and to recompact the loosened soil subsequent to a period of drying and aerating. The process of drying and aerating is dependent entirely upon weather conditions, and it would be advisable to limit the work area to a size which can be scarified and compacted the same day to avoid exposure to

precipitation. If scarification and aeration do not result in significant drying so that compaction can be accomplished the same day, it must be concluded that the weather is not favorable for the procedure.

Another procedure that can be used to improve a yielding subgrade would be to remove or "undercut" severely disturbed areas to a depth of twelve inches or greater and to fill these areas with a more suitable, compacted soil. This procedure is usually performed during the original site preparation but, if yielding does not become evident until after the subgrade has been exposed to repetitive preliminary paving operations, this procedure would have to be repeated prior to performing the paving work.

Other procedures for improving an unusually weak, wet or severely yielding subgrade include the use of chemical stabilization (lime, lime/fly-ash, cement, etc.). At times, it is possible to use a geogrid or geotextile in conjunction with the aggregate to provide the added support necessary to place the pavement without improving the subgrade. It is not necessarily predicted that the natural soils at this site will yield and become unstable. It is believed, however, that you should be made aware of this phenomenon which can occur even in soils which appear to be exceptionally strong when initially exposed in cuts, and of the advisability of improving a yielding subgrade before constructing pavements.

7.2 Pavement Subgrade Evaluation

It is anticipated that the subgrade for the pavements within the site will consist of natural medium-stiff to hard silty clay deemed suitable for pavement support following favorable proofrolling, or newly placed controlled fill. Given the variable nature of the subgrade soil and based on laboratory tests performed on the near surface soils, along with ODOT Group Index correlations, it is recommended that the following values be used for to design the new pavement sections:

California Bearing Ratio (CBR):	3%
Resilient Modulus (MR):	3,600 psi
Modulus of Subgrade Reaction (k):	100 pci

These subgrade support values may be used during the pavement design for this project provided that the entire proposed pavement subgrade is prepared in strict accordance with Item 204 of the 2010 ODOT ”Construction and Materials Specifications” (CMS), and the recommendations presented in this report. **Based on the conditions encountered in the borings, it should be anticipated that portions of the existing subgrade may not provide a CBR value equal to or greater than 3% and will need to be removed and wasted.**

This subgrade evaluation also assumes that the subgrade for the new roadways is composed of the materials encountered in the borings. If, at the time of construction, it is determined that the subgrade may consist of materials significantly different than those encountered, the pavement design subgrade criteria should be reviewed and, if necessary, modified.

Implementing these subgrade support parameters will also require that all borrow soil placed within 3 feet of the final subgrade level is capable of providing subgrade support parameters no lower than the above values. For this reason, S&ME suggests inclusion of the following notes in the General Notes of the project plans under the subheading associated with embankment construction:

> *All borrow soil placed within 3 feet of the final subgrade level must be capable of providing subgrade support parameters no lower than the values used to design the new pavement. Prior to commencing the construction of new fill embankments, representative bulk samples of each type of proposed earthen borrow soil shall be obtained and tested in the laboratory (ASTM D 1883/AASHTO T 193) to verify that the potential borrow soil is capable of providing a California Bearing Ratio (CBR) value equal to or greater than 3% in a properly compacted state.*

In addition to proper subgrade preparation, we recommend that the pavement design and construction include surface and subsurface drainage measures. Water which infiltrates the pavement and remains trapped within the pavement components during traffic loading is one of the leading causes of premature pavement failure. Effective design measures include the use of perimeter swales, perimeter edge drains, curbs, or a combination of these features to collect surface water runoff from areas adjacent to the pavement. Cohesive subgrade soils should be crowned or sloped to promote drainage of infiltrating water towards subsurface drainage collection systems.

7.3 Pedestrian Underpass Recommendations

At the time of this report the specific type of culvert for the proposed pedestrian underpass was not finalized; therefore, structural loading, foundation sizes and bearing elevations were not provided to S&ME. It is anticipated that foundations for the three- or four-sided culvert and wingwalls will bear at approximately Elevation 794.

7.3.1 Shallow Foundation Bearing Resistance

Based on historic Boring B-28, excavations for the culvert and wingwall foundations will extend into medium-hard to hard limestone. To distribute the loading over uneven rock surfaces and to minimize differential or point loading of the precast structural elements, such as the bottom of a four-sided box culvert, S&ME recommends that a 12-inch layer of crushed aggregate, such as ODOT CMS Item 304 and No. 57 stone, be placed between the box culvert bottom and the bedrock surface.

Table 2 on the following page summarizes the recommended nominal and factored unit bearing resistances (q_n and q_R) at the service and strength limit states for spread foundations bearing in medium-hard to hard limestone. In order to achieve the recommended factored bearing resistance provided in Table 2, the bearing surface should be carefully cleaned, with any weathered or fractured rock being removed, prior to placement of concrete. In addition, the bedrock exposed at the foundation bearing

elevation should be evaluated by a qualified Geotechnical Engineer to confirm that the footings bear on suitable material.

Table 2: Recommended Bearing Capacities (Nominal and Factored) for Spread Footings at the Pedestrian Underpass – Service and Strength Limit States

Limit State	Anticipated Bearing Elevation (ft)	Recommended Nominal Bearing Resistance, q_n (ksf)*	Resistance Factor, φ_b	Recommended Factored Bearing Resistance, q_R (ksf)*
Service	~ 794	30.0	1.0**	30.0
Strength		35.0	0.45***	15.8

*** For vertical loading only. Foundations may need to extend deeper to generate passive pressure to resist lateral loads.**
**** Article 10.5.5.1 of the 2010 AASHTO LRFD.**
***** Table 10.5.5.2.2-1 of 2010 AASHTO LRFD, footings on rock.**

Foundation sizes were not available at the time of this report; however, considering similar culvert projects, settlements are expected to be less than ½-inch provided the site preparation and foundation construction are performed in accordance with the recommendations provided in this report.

The portion of the sidewalls of the foundation excavations in the soil above the bedrock should be either sloped back or braced in accordance with the most recent OSHA excavation guidelines. Any surface water will need to be diverted away from the foundation excavation area during excavation and construction of the culvert foundations. The foundation bearing surfaces should be kept dry and free from standing water during all construction activities, and loose rock should be removed prior to placing concrete.

As these recommendations have been based on the currently available preliminary information, S&ME requests the opportunity to review the final proposed foundation design to verify that the intent of our recommendations has been followed.

7.3.2 Eccentricity (Overturning)

Proposed spread foundations for the structure which are subjected to eccentric loadings should be designed in accordance with Articles 10.6.1.3, 10.6.3.3 and 11.6.3 of the latest AASHTO LRFD specifications. Once the footing design has been finalized, the structural design should confirm that the eccentricity of the foundation is less than three-eighths (3/8) of the appropriate footing dimension (width and/or length) (AASHTO Article 10.6.3.3 – Footing on Rock).

7.3.3 Sliding Resistance

Sliding resistance to lateral loads is provided by the weight of the structure in combination with the friction developed along the bottom of the foundations at the footing/aggregate interface as well as from passive resistance from the bedrock. The factored resistance against failure by sliding (R_R) should be determined using Eq.

10.6.3.4-1 of the AASHTO LRFD Bridge Design Specifications, 2010 Interim Revisions. Because the proposed foundations will likely bear on either a prepared aggregate base or on highly weathered limestone bedrock, S&ME recommends that the nominal sliding resistance (R_R) be calculated by multiplying the total vertical force (V) acting on the foundation by 0.80 (tan φ_f) as shown in Eq. 10.6.3.4-2 of the AASHTO LRFD specifications. The factored resistance to sliding may then be computed using a resistance factor for shear resistance (φ_τ) of 0.80.

Additional resistance to sliding of spread footings could be derived from increasing the width of the footing or from passive pressure developed along the inside toe of the footing or a shear key. A nominal passive resistance of 600 psf per foot of effective embedment depth into the limestone bedrock should be used for the footings provided that the footings will bear at or below the anticipated bearing elevation shown in Table 2 of this report, and provided the footing concrete is placed flush ("neat") against the rock face of the excavation. Passive resistance should be neglected above the anticipated depth of scour and/or frost. S&ME recommends a resistance factor for passive resistance (φ_{ep}) of 0.50 be used to compute the factored passive resistance. It is important that all loosened rock be removed from the face of the foundation excavation that will provide the passive resistance.

7.3.4 Construction and Groundwater Considerations

During this investigation, significant groundwater was not encountered. However, S&ME recommends that the sides and bottoms of all excavations be monitored during the construction of the structure. In addition, it is recommended that all excavations for the proposed structure foundations be protected from surface runoff and storm water flow. Groundwater seepage may also emanate from fractures within the bedrock or from granular seams or zones in the soil encountered above the bedrock; however, the quantity of water is anticipated to be limited and may likely be controlled by bailing or with portable pumps.

Additionally, all excavations should be either sloped back or braced in accordance with the most recent OSHA excavation guidelines.

7.3.5 Lateral Earth Pressures

The proposed culvert and wingwalls must be designed to withstand lateral earth pressures, as well as hydrostatic pressures, that may develop behind the structure. The magnitude of the lateral earth pressures varies on the basis of soil type, permissible wall movement, and the configuration of the backfill.

To minimize lateral earth pressures, the zone behind the headwalls and culvert should be backfilled with granular soil, and the backfill should be effectively drained. For effective drainage, a zone of free-draining gravel (ODOT CMS Item 518.03) should be used directly behind the structures for a minimum thickness of 18 inches in accordance with ODOT CMS Item 518.05. This granular zone should drain to either weepholes or a pipe, so that hydrostatic pressures do not develop against the walls.

The type of backfill beyond the free-draining granular zone will govern the magnitude of the pressure to be used for structural design. Pressures of a relatively low magnitude will be developed by the use of granular backfill, whereas a cohesive (clay) backfill will result in the development of much higher pressures.

It is recommended that granular backfill be used behind the culvert. The backfill should be placed in a wedge formed by the back of the structure and a line rising from the base of the structure base at an angle no greater than 60 degrees from the horizontal. Granular backfill behind the structure should be compacted in accordance with ODOT Item 203, "Roadway Excavation and Embankment," of the most recent CMS. Overcompaction in areas directly behind the walls should be avoided as this might cause damage to the structure.

If proper drainage (ODOT CMS Item 518.05) is used and the granular backfill is placed and compacted in the wedge described previously, an equivalent fluid unit weight of 55 pounds per cubic foot (pcf) may be used considering an “at rest” earth pressure condition, meaning wall movements less than 0.25 percent of the wall height is permitted. If proper drainage is not provided, an “at rest” equivalent fluid unit weight of 90 pcf is recommended for use during design.

If proper drainage is incorporated and granular backfill is provided and compacted as specified, an equivalent fluid unit weight of 35 pcf may be used if a wall movement equivalent to 0.25 percent the height of the wall (H) is allowed to occur. Such movement is considered sufficient to mobilize an active earth pressure condition. Without proper drainage, but with granular backfill and permissible wall movement, an equivalent fluid unit weight of 80 pcf should be used.

Compacted cohesive materials tend alternatively to shrink, expand and creep over periods of time and create significant lateral pressures on any adjacent structures. Cohesive materials also require a greater amount of movement to mobilize an active earth pressure condition. Because of the long-term adverse effects, it is recommended that, if proper drainage (ODOT Item 518.03) is provided, an equivalent fluid unit weight of 90 pcf (at-rest) and 65 pcf (active) be used for design of the structure resisting the lateral loads imparted by drained, cohesive backfill. Without proper drainage, S&ME recommends that the structural design be performed using equivalent fluid unit weights of 110 pcf (at-rest) and 95 pcf (active).

The structure must also be designed to withstand the vertical load resulting from the weight of any fill and pavement that may be placed over the structure in addition to traffic surcharge loads. To estimate vertical loading, a total unit weight of 130 pcf may be used for soil and granular fill materials.

7.4 Groundwater Considerations

Based on observations made during the field work, it is not anticipated that significant quantities of groundwater will be encountered during construction activities. Shallow excavations, such as subgrade over-excavations, extending through only cohesive soil

may encounter small amounts of seepage. Deeper excavations, such as excavations for any utilities, extending through granular seams, pockets/lenses, or layers may encounter larger groundwater flows. The quantities of groundwater encountered are anticipated to be controllable by bailing or pumping from temporary sumps. If pumping from sump pits is not effectively keeping the groundwater below excavation levels, then S&ME should be retained to provide additional recommendations.

During construction, surface runoff and precipitation should not be permitted to collect and stand in excavations as the soil will absorb water. Soils softened by standing water or disturbed by construction activities should be removed from excavations before pavement is placed. Additionally, all excavations should be either sloped back or braced in accordance with the most recent OSHA excavation guidelines.

8. FINAL CONSIDERATIONS

The analyses, conclusions and recommendations presented in this report are based on project information provided by EMH&T. S&ME should be retained to review the final design plans and specifications to verify that the intent of our engineering recommendations have been properly incorporated into the design documents. It is also recommended that S&ME be retained to observe the subgrade proofrolling, perform fill/backfill testing, and observe construction to confirm that our recommendations are valid or to modify them accordingly. S&ME cannot assume responsibility or liability for the adequacy of recommendations if we are not retained to observe construction.

The contents of this report are also based on the subsurface conditions as they existed at the time of our field investigation, and further on the assumption that the exploratory borings are representative of actual subsurface conditions throughout the area investigated. It should be noted that actual subsurface conditions between and beyond the borings might differ from those encountered at the boring locations. If subsurface conditions are encountered during construction that vary from those discussed in this report, S&ME should be notified immediately so that we may evaluate the effects, if any, on design and construction.

APPENDIX

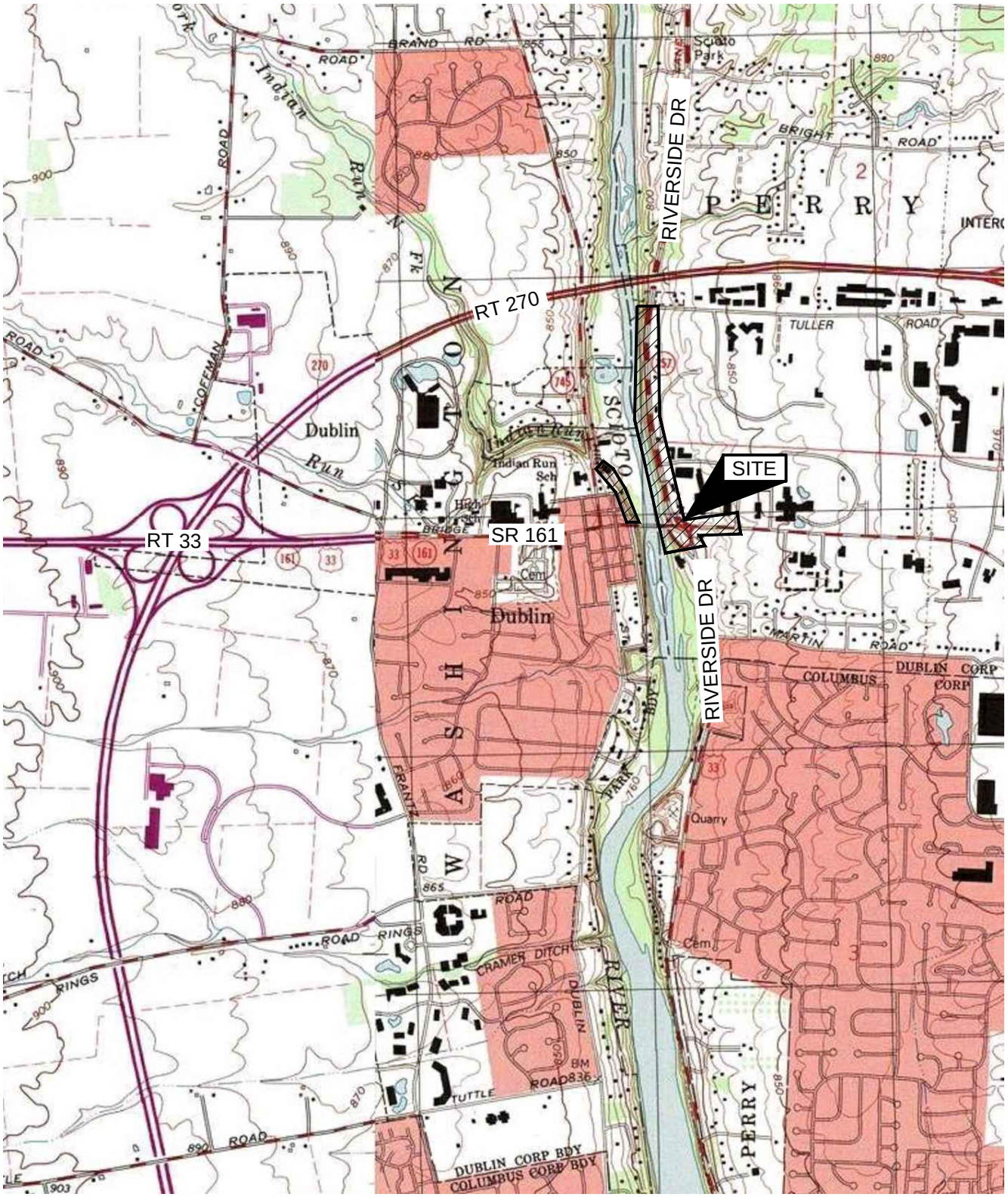

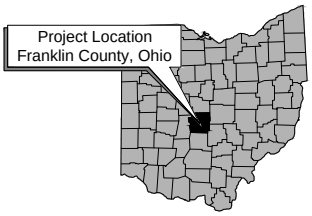

USGS Mapping:
Franklin Quad

0 2000 4000

SCALE IN FEET

VICINITY MAP

SR 161/RIVERSIDE DR. IMPROVEMENTS
FRANKLIN COUNTY, DUBLIN, OHIO

Project: 1171-13-042A	
Drawing Date: 10-3-2013	
Last Updated: 10-10-2013	
Drawn By: PRR	
Approved By: WML	
Scale: GRAPHIC	1:1

S&ME
WWW.SMEINC.COM
ENGINEERING FIRM. 03530

PLATE 1

Images: ~AERIAL FOR REF..tif ~COFFMAN PARK.jp2 ~TOPO\map.JPG
Xrefs:
File Last Updated: Oct 10, 2013
Plot Info: 10-10-2013 @ 1:26pm By: prock
S&ME Filename: I:\DEPTS\cadd\Drawings\BST Projects\1171-Geotechnical\1171-13-042\1171-13-042A\PLANS\SR 161RIVERSIDE DR IMPROVEMENTS_VICINITY MAP.dwg Layout: V-Map

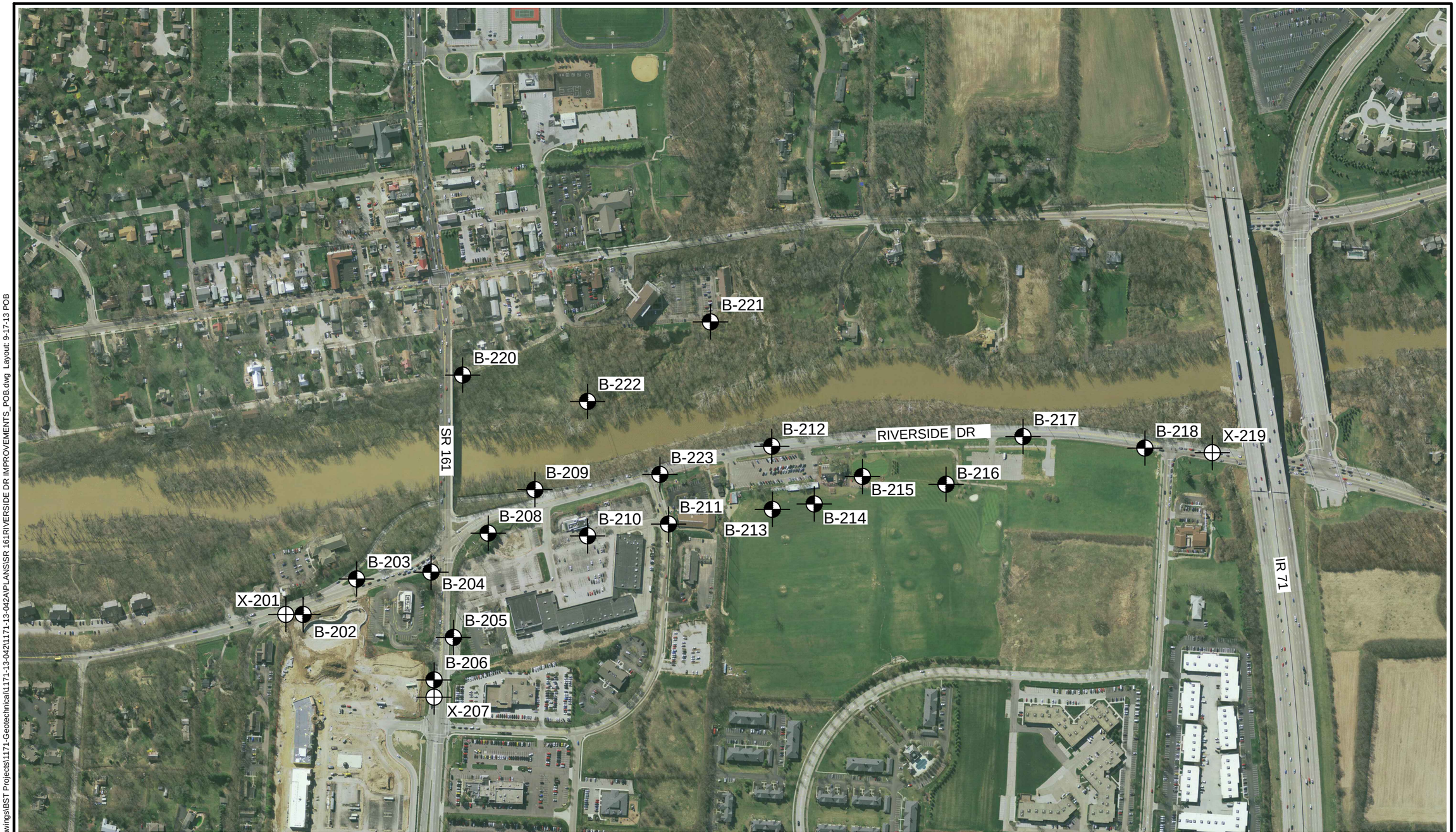

0 400 800

SCALE INFEET

PAVEMENT CORE X-212 PERFORMED IN COMBINATION WITH BORING B-212

LEGEND

B-1 BORING NUMBER AND LOCATION

X-1 PAVEMENT CORE NUMBER AND LOCATION

PLAN OF BORINGS

SR 161/RIVERSIDE DR. IMPROVEMENTS
DUBLIN, OHIO

Project: 1171-13-042A	Drawn By: PRR	
Drawing Date: 9-17-2013	Approved By: WML	
Last Updated: 11-11-2013	Scale: GRAPHIC	1:1

S&ME
WWW.SMEINC.COM
ENGINEERING FIRM. 03530

PLATE 2

Images: ~Riverside Drive Aerial.jp2 ~TOPOImap.JPG
Xrefs:
File Last Updated: Nov 11, 2013
Plot Info: 11-11-2013 @ 11:03am By: prock
S&ME Filename: I:\DEPTS\cadd\Drawings\BST Projects\1171-Geotechnical\1171-13-042\1171-13-042A\PLANS\SR 161RIVERSIDE DR IMPROVEMENTS_POB.dwg Layout: 9-17-13 POB

EXPLANATION OF SYMBOLS AND TERMS USED ON BORING LOGS FOR SAMPLING AND DESCRIPTION OF SOIL

SAMPLING DATA

- Blocked-in "SAMPLES" column indicates sample was attempted and recovered within this depth interval.

- Sample was attempted within this interval but not recovered.

2/5/9 - The number of blows required for each 6-inch increment of penetration of a "Standard" 2-inch O.D. split-barrel sampler, driven a distance of 18 inches by a 140-pound hammer freely falling 30 inches. The raw "blowcount" or "N" is equal to the sum of the second and third 6-inch increments of penetration. Addition of one of the following symbols indicates the use of a split-barrel other than the 2" O.D. sampler:

- 2S - 2½"O.D. split-barrel sampler
- 3S - 3" O.D. split-barrel sampler

N_{60} - Corrected Blowcount = [(S&ME Drill Rod Energy Ratio) / (0.60 Standard)] X N_{raw}

P - Shelby tube sampler, 3" O.D., hydraulically pushed.

R - Refusal of sampler in very-hard or dense soil, or on a resistant surface.

50-2" - Number of blows (50) to drive a split-barrel sampler a certain number of inches (2), other than the normal 6-inch increment.

SD - Split-barrel sampler (S) advanced by weight of drill rods (D).

SH - Split-barrel sampler (S) advanced by combined weight of rods and drive Hammer (H).

SOIL DESCRIPTIONS

All soils have been classified basically in accordance with the Unified Soil Classification System, but this system has been augmented by the use of special adjectives to designate the approximate percentages of minor components, as follows:

Adjective	Percent by Weight
trace	1 to 10
little	11 to 20
some	21 to 35
"and"	36 to 50

The following terms are used to describe density and consistency of soils:

Term (Granular Soils)	Blows per foot (N_{60})
Very-loose	Less than 5
Loose	5 to 10
Medium-dense	11 to 30
Dense	31 to 50
Very-dense	Over 50

Term (Cohesive Soils)	Qu (tsf)
Very-soft	Less than 0.25
Soft	0.25 to 0.5
Medium-stiff	0.5 to 1.0
Stiff	1.0 to 2.0
Very-stiff	2.0 to 4.0
Hard	Over 4.0

EXPLANATION OF SYMBOLS AND TERMS USED ON BORING LOGS FOR SAMPLING AND DESCRIPTION OF ROCK

SAMPLING DATA

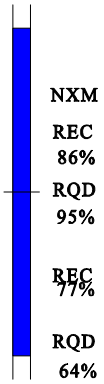

When bedrock is encountered and rock core samples are attempted, the "SAMPLING EFFORT" column is used to record the type of core barrel used (NXM), the percentage of core recovered (REC) for each run of the sampler, and the Rock Quality Designation (RQD) value. Rock-core barrels can be of either single- or double-tube construction, and a special series of double-tube barrels, designated by the suffix M, is commonly used to obtain maximum core recovery in very-soft or fractured rock. Three basic groups of barrels are used most often in subsurface investigations for engineering purposes, and these groups and the diameters of the cores obtained are as follows:

AX, AW, AXM, AWM	-	1-1/8 inches
BX, BW, BXM, BWM	-	1-5/8 inches
NX, NW, NXM, NWM	-	2-1/8 inches

Rock Quality Designation (RQD) is expressed as a percentage and is obtained by summing the total length of all core pieces which are at least 4 inches long and then dividing this sum by the total length of core run. It has been found that there is a reasonably good relationship between the RQD value and the general quality of rock for engineering purposes. This relationship is shown as follows:

RQD - %	General Quality
0 - 25	Very-poor
25 - 50	Poor
50 - 75	Fair
75 - 90	Good
90 - 100	Excellent

ROCK HARDNESS

THE FOLLOWING TERMS ARE USED TO DESCRIBE ROCK HARDNESS:

Term	Meaning	Mohs' Hardness
Very-soft	Rock such as shale can be easily picked apart by the fingers. Sandstone is poorly cemented and very friable. The rock resembles hard clay or dense sand, but has rock structure.	Less than 1
Soft	Rock such as shale, siltstone or limestone can be scratched or powdered by fingernail pressure. Sandstone is mostly poorly cemented, and individual sand grains can be separated from the main rock mass by a fingernail.	1 to 1½
Medium-hard	Rock cannot be scratched by a fingernail, but can be powdered by a knife. Sandstone is mostly well cemented, but individual grains can be removed by scratching with a knife.	2½ to 5½
Hard	Rock is well cemented and cannot be powdered by a knife. Rock can be powdered by a steel file.	5½ to 6½
Very-hard	Rock cannot be scratched by a steel file and the core sample rings when struck with a hammer.	Greater than 6½

LOG OF BORING NO. B-202
SR161/RIVERSIDE DRIVE IMPROVEMENTS
DUBLIN, OHIO

S&ME

LOCATION: **See Plate 2 of Appendix.** ELEVATION: **793 ±** DATE: **9/9/13**

DRILLING METHOD: **4-1/2" O.D. Continuous-flight Auger** COMPLETION DEPTH: **6.9'**

SAMPLER(S): **2" O.D. Split-barrel Sampler**

ELEV.	DEPTH, FEET	SAMPLE NUMBER	SAMPLE	SAMPLE EFFORT	N_{60}	SAMPLE REC-%	DESCRIPTION	NATURAL CONSISTENCY INDEX / NATURAL MOISTURE CONTENT (PLASTIC LIMIT — LIQUID LIMIT; 10 20 30 40)	TEST RESULTS
	0						ASPHALT - 11 INCHES		
792.1									
791.5							GRANULAR BASE - 6 INCHES		
790.5		1		7 / 4 / 4	10	40	Stiff gray mottled with brown silty clay, some fine to coarse sand, some fine to coarse gravel.		H=1.0-2.0 G
789.6				4			Very-stiff gray silty clay, trace fine to coarse sand.		
		2		5 / 7	15	67	Very-stiff brown silty clay, trace to little fine to coarse sand, trace fine to coarse gravel.		H=2.0-2.5
	5	3		3 / 5 / 6	14	60			H=2.0
786.5		4		10 / 50-5"R					
786.1							Very-dense gray fine to coarse gravel, some fine to coarse sand, trace silt (weathered limestone).		
	10						- No seepage encountered. - Encountered auger refusal on limestone bedrock at 6.9'. - Boring located using field pacing and taping methods and should be considered approximate. - Elevations estimated from Google Earth® and should be considered approximate.		
	15								
	20								
	25								

2010 NEW DEFAULT BORING LOG-W/ N60

WATER LEVEL: "Dry"
WATER NOTE: At Completion
DATE: 9/9/13

SYMBOLS USED TO INDICATE TEST RESULTS

G - Gradation
Q - Uncon Comp
T - Triax Comp
C - Consol.
(See Separate Curves)

H - Penetrometer (tsf)
W - Unit Dry Wt (pcf)
D - Relative Dens (%)

Drill Rod Energy Ratio : .76
Last Calibration Date : 02/19/13
Drill Rig Number : Truck 55(AW)

JOB: 1171-13-042A

LOG OF BORING NO. B-203
SR161/RIVERSIDE DRIVE IMPROVEMENTS
DUBLIN, OHIO

S&ME

LOCATION: **See Plate 2 of Appendix.** ELEVATION: **793 ±** DATE: **9/11/13**

DRILLING METHOD: **4-1/2" O.D. Continuous-flight Auger** COMPLETION DEPTH: **4.0'**

SAMPLER(S): **2" O.D. Split-barrel Sampler**

ELEV.	DEPTH, FEET	SAMPLE NUMBER	SAMPLE	SAMPLE EFFORT	N_{60}	SAMPLE REC-%	DESCRIPTION	NATURAL CONSISTENCY INDEX / NATURAL MOISTURE CONTENT (PLASTIC LIMIT – LIQUID LIMIT; 10 20 30 40)	TEST RESULTS
792.8	0						TOPSOIL - 2 INCHES		
		1		11/4/6	13	100	Medium-dense gray and brown fine to coarse gravel, some fine to coarse sand, some to "and" silty clay.		
		2		6/9/11	25	33			G
789.0		3		50-0"R					
	5						- No seepage encountered. - Encountered auger refusal on limestone bedrock at 4.0'. - Boring located using field pacing and taping methods and should be considered approximate. - Elevations estimated from Google Earth® and should be considered approximate.		
	10								
	15								
	20								
	25								

2010 NEW DEFAULT BORING LOG-W/ N60

WATER LEVEL: "Dry"
WATER NOTE: At Completion
DATE: 9/11/13

SYMBOLS USED TO INDICATE TEST RESULTS

G - Gradation
Q - Uncon Comp
T - Triax Comp
C - Consol.
(See Separate Curves)

H - Penetrometer (tsf)
W - Unit Dry Wt (pcf)
D - Relative Dens (%)

Drill Rod Energy Ratio : .75
Last Calibration Date : 02/20/13
Drill Rig Number : S&ME 550(AW)

JOB: 1171-13-042A

LOG OF BORING NO. B-204
SR161/RIVERSIDE DRIVE IMPROVEMENTS
DUBLIN, OHIO

S&ME

LOCATION: **See Plate 2 of Appendix.** ELEVATION: **798 ±** DATE: **9/11/13**

DRILLING METHOD: **4-1/2" O.D. Continuous-flight Auger** COMPLETION DEPTH: **7.2'**

SAMPLER(S): **2" O.D. Split-barrel Sampler**

ELEV.	DEPTH, FEET	SAMPLE NUMBER	SAMPLE	SAMPLE EFFORT	N_{60}	SAMPLE REC-%	DESCRIPTION	NATURAL CONSISTENCY INDEX / NATURAL MOISTURE CONTENT / PLASTIC LIMIT / LIQUID LIMIT (10 20 30 40)	TEST RESULTS
797.6	0						TOPSOIL - 4 INCHES		
		1		10 / 9 / 7	20	67	Medium-dense gray and brown fine to coarse gravel, some fine to coarse sand, little to some clayey silt.		
		2		2 / 4 / 5	11	67			G
	5	3		5 / 4 / 5	11	100			
		4		5 / 7 / 50-4"R		100			
790.8							- No seepage encountered. - Encountered auger refusal on limestone bedrock at 7.2'. - Boring located using field pacing and taping methods and should be considered approximate. - Elevations estimated from available topographic mapping and should be considered approximate.		
	10								
	15								
	20								
	25								

2010 NEW DEFAULT BORING LOG-W/ N60

WATER LEVEL: "Dry"
WATER NOTE: At Completion
DATE: 9/11/13

SYMBOLS USED TO INDICATE TEST RESULTS

G - Gradation
Q - Uncon Comp
T - Triax Comp
C - Consol.
(See Separate Curves)

H - Penetrometer (tsf)
W - Unit Dry Wt (pcf)
D - Relative Dens (%)

Drill Rod Energy Ratio : .75
Last Calibration Date : 02/20/13
Drill Rig Number : S&ME 550(AW)

JOB: 1171-13-042A

LOG OF BORING NO. B-205
SR161/RIVERSIDE DRIVE IMPROVEMENTS
DUBLIN, OHIO

S&ME

LOCATION: See Plate 2 of Appendix. ELEVATION: 809.6 DATE: 9/11/13

DRILLING METHOD: 4-1/2" O.D. Continuous-flight Auger COMPLETION DEPTH: 7.5'

SAMPLER(S): 2" O.D. Split-barrel Sampler

ELEV.	DEPTH, FEET	SAMPLE NUMBER	SAMPLE	SAMPLE EFFORT	N_{60}	SAMPLE REC-%	DESCRIPTION	NATURAL CONSISTENCY INDEX / NATURAL MOISTURE CONTENT / PLASTIC LIMIT / LIQUID LIMIT (10 20 30 40)	TEST RESULTS
809.2	0						ASPHALT - 5 INCHES		
808.7							GRANULAR BASE - 6 INCHES		
		1		6 / 7 / 9	20	100	Medium-dense gray and brown fine to coarse gravel, some fine to coarse sand, some silty clay.		G
805.6		2		8 / 7 / 6	16	67			
804.1	5	3		4 / 3 / 5	10	100	Loose gray fine to coarse gravel, some fine to coarse sand, "and" silty clay.		
802.1		4		3 / 4 / 5	11	67	Medium-stiff to stiff brown silty clay, little fine to coarse sand, trace fine gravel.		H=0.5-1.5
	10						- No seepage encountered. - Boring located using field pacing and taping methods and should be considered approximate. - Boring elevation provided by EMH&T.		
	15								
	20								
	25								

2010 NEW DEFAULT BORING LOG-W/ N60

WATER LEVEL: "Dry"
WATER NOTE: At Completion
DATE: 9/11/13

SYMBOLS USED TO INDICATE TEST RESULTS

G - Gradation, Q - Uncon Comp, T - Triax Comp, C - Consol. — See Separate Curves

H - Penetrometer (tsf)
W - Unit Dry Wt (pcf)
D - Relative Dens (%)

Drill Rod Energy Ratio : .75
Last Calibration Date : 02/20/13
Drill Rig Number : S&ME 550(AW)

JOB: 1171-13-042A

LOG OF BORING NO. B-206
SR161/RIVERSIDE DRIVE IMPROVEMENTS
DUBLIN, OHIO

S&ME

LOCATION: **See Plate 2 of Appendix.** ELEVATION: **819 ±** DATE: **9/9/13**

DRILLING METHOD: **4-1/2" O.D. Continuous-flight Auger** COMPLETION DEPTH: **2.2'**

SAMPLER(S): **2" O.D. Split-barrel Sampler**

ELEV.	DEPTH, FEET	SAMPLE NUMBER	SAMPLE	SAMPLE EFFORT	N_{60}	SAMPLE REC-%	DESCRIPTION	NATURAL CONSISTENCY INDEX / NATURAL MOISTURE CONTENT (PLASTIC LIMIT — LIQUID LIMIT; 10 20 30 40)	TEST RESULTS
	0						ASPHALT - 13 INCHES		
817.9									
817.5							GRANULAR BASE - 5 INCHES		
817.0		1	■	4 / 50-2"R		47	Very-stiff brown mottled with gray silty clay, some fine to coarse sand, trace fine gravel.		H=2.5 G
816.8							Weathered limestone.		
	5						- No seepage encountered. - Encountered auger refusal on limestone bedrock at 2.2'. - Boring located using field pacing and taping methods and should be considered approximate. - Elevations estimated from available topographic mapping and should be considered approximate.		
	10								
	15								
	20								
	25								

2010 NEW DEFAULT BORING LOG-W/ N60

WATER LEVEL: ▽ "Dry" ▼
WATER NOTE: At Completion
DATE: 9/9/13

SYMBOLS USED TO INDICATE TEST RESULTS

G - Gradation, Q - Uncon Comp, T - Triax Comp, C - Consol. — See Separate Curves

H - Penetrometer (tsf)
W - Unit Dry Wt (pcf)
D - Relative Dens (%)

Drill Rod Energy Ratio : .76
Last Calibration Date : 02/19/13
Drill Rig Number : Truck 55(AW)

JOB: 1171-13-042A

LOG OF BORING NO. B-208
SR161/RIVERSIDE DRIVE IMPROVEMENTS
DUBLIN, OHIO

S&ME

LOCATION: See Plate 2 of Appendix. ELEVATION: 798.1 DATE: 9/9/13

DRILLING METHOD: 4-1/2" O.D. Continuous-flight Auger COMPLETION DEPTH: 8.6'

SAMPLER(S): 2" and 2-1/2" O.D. Split-barrel Samplers

ELEV.	DEPTH, FEET	SAMPLE NUMBER	SAMPLE	SAMPLE EFFORT	N_{60}	SAMPLE REC-%	DESCRIPTION	NATURAL CONSISTENCY INDEX / NATURAL MOISTURE CONTENT (PLASTIC LIMIT — LIQUID LIMIT)	TEST RESULTS
797.9	0						TOPSOIL - 2 INCHES		
		1		19/20/22	53	67	Very-dense gray and brown fine to coarse gravel, some fine to coarse sand, some silty clay, contains few cobbles.		
795.1									
		2		4/4/4	10	67	Loose gray and brown fine to coarse gravel, little to some fine to coarse sand, some to "and" silty clay.		G
	5								
		3		3/3/3	8				
		2S		7		27			
789.6									
789.5		4		50-1"R		100	Weathered limestone.		
	10								
	15								
	20								
	25								

- No seepage encountered.
- Encountered cobbles at 1.5'.
- Encountered auger refusal on limestone bedrock at 8.6'.
- Boring located using field pacing and taping methods and should be considered approximate.
- Boring elevation provided by EMH&T.

2010 NEW DEFAULT BORING LOG-W/ N60

WATER LEVEL: "Dry"
WATER NOTE: At Completion
DATE: 9/9/13

SYMBOLS USED TO INDICATE TEST RESULTS

G - Gradation, Q - Uncon Comp, T - Triax Comp, C - Consol. — See Separate Curves

H - Penetrometer (tsf)
W - Unit Dry Wt (pcf)
D - Relative Dens (%)

Drill Rod Energy Ratio : .76
Last Calibration Date : 02/19/13
Drill Rig Number : Truck 55(AW)

JOB: 1171-13-042A

LOG OF BORING NO. B-209
SR161/RIVERSIDE DRIVE IMPROVEMENTS
DUBLIN, OHIO

S&ME

LOCATION: **See Plate 2 of Appendix.** ELEVATION: **796 ±** DATE: **9/11/13**

DRILLING METHOD: **4-1/2" O.D. Continuous-flight Auger** COMPLETION DEPTH: **5.5'**

SAMPLER(S): **2" O.D. Split-barrel Sampler**

ELEV.	DEPTH, FEET	SAMPLE NUMBER	SAMPLE	SAMPLE EFFORT	N_{60}	SAMPLE REC-%	DESCRIPTION	NATURAL CONSISTENCY INDEX / NATURAL MOISTURE CONTENT / PLASTIC LIMIT / LIQUID LIMIT (10 20 30 40)	TEST RESULTS
795.3	0						ASPHALT - 7 INCHES		
795.0							GRANULAR BASE - 5 INCHES		
793.5		1		14/16/10	33	100	Dense gray fine to coarse gravel, some fine to coarse sand, some silty clay.		G
792.0		2		8/9/5	18	100	Very-stiff gray mottled with brown silty clay, some fine to coarse sand, some fine to coarse gravel.		H=2.5-3.0
790.5	5	3		7/8/15	29	33	Medium-dense gray and brown fine to coarse gravel, some fine to coarse sand, some silty clay.		
	10						- No seepage encountered. - Encountered auger refusal on limestone bedrock at 5.3'. - Boring located using field pacing and taping methods and should be considered approximate. - Elevations estimated from available topographic mapping and should be considered approximate.		
	15								
	20								
	25								

2010 NEW DEFAULT BORING LOG-W/ N60

WATER LEVEL: "Dry"
WATER NOTE: At Completion
DATE: 9/11/13

SYMBOLS USED TO INDICATE TEST RESULTS

G - Gradation
Q - Uncon Comp
T - Triax Comp
C - Consol.
(See Separate Curves)

H - Penetrometer (tsf)
W - Unit Dry Wt (pcf)
D - Relative Dens (%)

Drill Rod Energy Ratio : .75
Last Calibration Date : 02/20/13
Drill Rig Number : S&ME 550(AW)

JOB: 1171-13-042A

LOG OF BORING NO. B-210
SR161/RIVERSIDE DRIVE IMPROVEMENTS
DUBLIN, OHIO

S&ME

LOCATION: See Plate 2 of Appendix. ELEVATION: 797.8 DATE: 9/10/13

DRILLING METHOD: 4-1/2" O.D. Continuous-flight Auger COMPLETION DEPTH: 11.1'

SAMPLER(S): 2" O.D. Split-barrel Sampler, NQ Rock Core Barrel

ELEV.	DEPTH, FEET	SAMPLE NUMBER	SAMPLE	SAMPLE EFFORT	N_{60}	SAMPLE REC-%	DESCRIPTION	NATURAL CONSISTENCY INDEX / NATURAL MOISTURE CONTENT (PLASTIC LIMIT – LIQUID LIMIT; 10 20 30 40)	TEST RESULTS
797.5	0						ASPHALT - 3 INCHES		
796.9							GRANULAR BASE - 8 INCHES		
		1		3 / 4 / 8	15	100	Hard brown mottled with gray silty clay, some fine to coarse sand, little fine to coarse gravel.		H=4.0-4.5 G
794.8							Medium-dense brown fine to coarse sand, "and" fine to coarse gravel, some clayey silt.		
		2		11 / 6 / 14	25	100			
793.3		2A				100	Very-stiff gray silty clay, little fine to coarse sand, some fine to coarse gravel.		H=2.5
	5								
792.0									
791.7		3		50-1"R		100	Weathered limestone.		
		4		REC 72% RQD 0%			Medium-hard gray-brown limestone, thickly bedded, ferriferous, crystalline, fossiliferous, vuggy, fractured to highly fractured.		
	10								
786.7									
							- No seepage or groundwater encountered prior to adding water for rock core. - Boring located using field pacing and taping methods and should be considered approximate. - Boring elevation provided by EMH&T.		
	15								
	20								
	25								

2010 NEW DEFAULT BORING LOG-W/ N60

WATER LEVEL: ▽ ▼
WATER NOTE:
DATE:

SYMBOLS USED TO INDICATE TEST RESULTS

G - Gradation
Q - Uncon Comp
T - Triax Comp
C - Consol.
(See Separate Curves)

H - Penetrometer (tsf)
W - Unit Dry Wt (pcf)
D - Relative Dens (%)

Drill Rod Energy Ratio : .76
Last Calibration Date : 02/19/13
Drill Rig Number : Truck 55(AW)

JOB: 1171-13-042A

LOG OF BORING NO. B-211
SR161/RIVERSIDE DRIVE IMPROVEMENTS
DUBLIN, OHIO

S&ME

LOCATION: See Plate 2 of Appendix. ELEVATION: 797.0 DATE: 9/10/13

DRILLING METHOD: 4-1/2" O.D. Continuous-flight Auger COMPLETION DEPTH: 2.2'

SAMPLER(S): 2" O.D. Split-barrel Sampler

ELEV.	DEPTH, FEET	SAMPLE NUMBER	SAMPLE	SAMPLE EFFORT	N_{60}	SAMPLE REC-%	DESCRIPTION	NATURAL CONSISTENCY INDEX / NATURAL MOISTURE CONTENT (PLASTIC LIMIT — LIQUID LIMIT) 10 20 30 40	TEST RESULTS
796.4	0						ASPHALT - 6 INCHES		
796.0							GRANULAR BASE - 6 INCHES		
		1	■	50-4"R		20	Very-dense gray and brown fine to coarse gravel, some fine to coarse sand, little silty clay.		
794.8									
	5								
	10								
	15								
	20								
	25								

- No seepage encountered.
- Encountered auger refusal on limestone bedrock at 2.2'.
- Boring located using field pacing and taping methods and should be considered approximate.
- Boring elevation provided by EMH&T.

2010 NEW DEFAULT BORING LOG-W/ N60

WATER LEVEL: "Dry"
WATER NOTE: At Completion
DATE: 9/10/13

SYMBOLS USED TO INDICATE TEST RESULTS

G - Gradation, Q - Uncon Comp, T - Triax Comp, C - Consol. — See Separate Curves

H - Penetrometer (tsf)
W - Unit Dry Wt (pcf)
D - Relative Dens (%)

Drill Rod Energy Ratio : .76
Last Calibration Date : 02/19/13
Drill Rig Number : Truck 55(AW)

JOB: 1171-13-042A

LOG OF BORING NO. B-212
SR161/RIVERSIDE DRIVE IMPROVEMENTS
DUBLIN, OHIO

S&ME

LOCATION: **See Plate 2 of Appendix.** ELEVATION: **798.5** DATE: **9/10/13**

DRILLING METHOD: **4-1/2" O.D. Continuous-flight Auger** COMPLETION DEPTH: **5.5'**

SAMPLER(S): **2" O.D. Split-barrel Sampler**

ELEV.	DEPTH, FEET	SAMPLE NUMBER	SAMPLE	SAMPLE EFFORT	N_{60}	SAMPLE REC-%	DESCRIPTION	NATURAL CONSISTENCY INDEX / NATURAL MOISTURE CONTENT (PLASTIC LIMIT — LIQUID LIMIT; 10 20 30 40)	TEST RESULTS
797.8	0						ASPHALT - 8.5 INCHES		
797.6							GRANULAR BASE - 2 INCHES		
		1		3/4/18	28	100	Very-stiff brown silty clay, little fine to coarse sand, trace fine gravel.		H=2.5-3.0 G LL=67%
796.2							Very-dense gray fine to coarse gravel, some fine to coarse sand, trace silt.		
		2		25/27/50	98	100			
793.0	5								
	10						- No seepage encountered. - Encountered auger refusal on limestone bedrock at 5.5'. - Boring located by EMH&T and relocated by S&ME using field pacing and taping methods and should be considered approximate. - Elevations estimated from available topographic mapping and should be considered approximate.		
	15								
	20								
	25								

2010 NEW DEFAULT BORING LOG-W/ N60

WATER LEVEL: "Dry"
WATER NOTE: At Completion
DATE: 9/10/13

SYMBOLS USED TO INDICATE TEST RESULTS

G - Gradation, Q - Uncon Comp, T - Triax Comp, C - Consol. — See Separate Curves

H - Penetrometer (tsf)
W - Unit Dry Wt (pcf)
D - Relative Dens (%)

Drill Rod Energy Ratio : .76
Last Calibration Date : 02/19/13
Drill Rig Number : Truck 55(AW)

JOB: 1171-13-042A

LOG OF BORING NO. B-213
SR161/RIVERSIDE DRIVE IMPROVEMENTS
DUBLIN, OHIO

S&ME

LOCATION: **See Plate 2 of Appendix.** ELEVATION: **798.7** DATE: **9/11/13**

DRILLING METHOD: **4-1/2" O.D. Continuous-flight Auger** COMPLETION DEPTH: **5.0'**

SAMPLER(S): **2" O.D. Split-barrel Sampler**

ELEV.	DEPTH, FEET	SAMPLE NUMBER	SAMPLE	SAMPLE EFFORT	N_{60}	SAMPLE REC-%	DESCRIPTION	NATURAL CONSISTENCY INDEX / NATURAL MOISTURE CONTENT (PLASTIC LIMIT — LIQUID LIMIT; 10 20 30 40)	TEST RESULTS
798.5	0						TOPSOIL - 2 INCHES		
		1	■	4 / 4 / 7	14	100	Hard gray mottled with brown silty clay, trace fine to coarse sand, trace fine to coarse gravel.		H=4.0-4.5 G LL=56%
795.7									
		2	■	12 / 23 / 32	69	100	Very-dense gray fine to coarse gravel, some fine to coarse sand, trace silty clay and silt.		
793.7	5								
	10								
	15								
	20								
	25								

- No seepage encountered.
- Encountered auger refusal on limestone bedrock at 5.0'.
- Boring located using field pacing and taping methods and should be considered approximate.
- Boring elevation provided by EMH&T.

2010 NEW DEFAULT BORING LOG-W/ N60

WATER LEVEL: "Dry"
WATER NOTE: At Completion
DATE: 9/11/13

SYMBOLS USED TO INDICATE TEST RESULTS

G - Gradation
Q - Uncon Comp
T - Triax Comp
C - Consol.
(See Separate Curves)

H - Penetrometer (tsf)
W - Unit Dry Wt (pcf)
D - Relative Dens (%)

Drill Rod Energy Ratio : .75
Last Calibration Date : 02/20/13
Drill Rig Number : S&ME 550(AW)

JOB: 1171-13-042A

LOG OF BORING NO. B-214
SR161/RIVERSIDE DRIVE IMPROVEMENTS
DUBLIN, OHIO

S&ME

LOCATION: **See Plate 2 of Appendix.** ELEVATION: **799.8** DATE: **9/11/13**

DRILLING METHOD: **4-1/2" O.D. Continuous-flight Auger** COMPLETION DEPTH: **14.2'**

SAMPLER(S): **2" O.D. Split-barrel Sampler, NQ Rock Core Barrel**

ELEV.	DEPTH, FEET	SAMPLE NUMBER	SAMPLE	SAMPLE EFFORT	N_{60}	SAMPLE REC-%	DESCRIPTION	NATURAL CONSISTENCY INDEX / NATURAL MOISTURE CONTENT (PLASTIC LIMIT – LIQUID LIMIT)	TEST RESULTS
799.5	0						TOPSOIL - 3 INCHES		
		1		4 / 11 / 50-4"R		93	Hard brown mottled with gray silty clay, trace fine to coarse sand, trace fine gravel.		H=4.0-4.5 G LL=56%
797.3							Medium-hard gray-brown limestone, highly weathered, thickly bedded, ferriferous, slightly crystalline, fossiliferous, vuggy, fractured to highly fractured.		
	5	2		REC 98% RQD 0%					
	10	3		REC 99% RQD 0%					
785.6									
	15						- No seepage or groundwater encountered prior to adding water for rock core. - Boring located by EMH&T. - Boring elevation provided by EMH&T.		
	20								
	25								

NATURAL CONSISTENCY INDEX / NATURAL MOISTURE CONTENT: PLASTIC LIMIT – LIQUID LIMIT; 10 20 30 40

WATER LEVEL: ▽ ▼
WATER NOTE:
DATE:

SYMBOLS USED TO INDICATE TEST RESULTS

G - Gradation, Q - Uncon Comp, T - Triax Comp, C - Consol. — See Separate Curves

H - Penetrometer (tsf)
W - Unit Dry Wt (pcf)
D - Relative Dens (%)

Drill Rod Energy Ratio : .75
Last Calibration Date : 02/20/13
Drill Rig Number : S&ME 550(AW)

JOB: 1171-13-042A

2010 NEW DEFAULT BORING LOG-W/ N60

LOG OF BORING NO. B-215
SR161/RIVERSIDE DRIVE IMPROVEMENTS
DUBLIN, OHIO

S&ME

LOCATION: **See Plate 2 of Appendix.** ELEVATION: **802.9** DATE: **9/11/13**

DRILLING METHOD: **4-1/2" O.D. Continuous-flight Auger** COMPLETION DEPTH: **6.8'**

SAMPLER(S): **2" O.D. Split-barrel Sampler**

ELEV.	DEPTH, FEET	SAMPLE NUMBER	SAMPLE	SAMPLE EFFORT	N_{60}	SAMPLE REC-%	DESCRIPTION	TEST RESULTS
802.7	0						TOPSOIL - 2 INCHES	
		1	■	SH / SH / 1	0	67	Medium-stiff to stiff brown mottled with gray silty clay, some fine to coarse sand, trace fine gravel.	H=0.5-1.5 G
799.9								
		2	■	2 / 2 / 3	6	100	Very-stiff brown silty clay, some fine to coarse sand, trace fine to coarse gravel.	H=3.0
797.4	5							
796.1		3	■	3 / 50-3"R		100	Very-stiff dark-gray and brown silty clay, little fine to coarse sand, little fine to coarse gravel.	H=2.5-3.0
	10						- No seepage encountered. - Encountered auger refusal on limestone bedrock at 6.8'. - Boring located using field pacing and taping methods and should be considered approximate. - Boring elevation provided by EMH&T.	
	15							
	20							
	25							

NATURAL CONSISTENCY INDEX — NATURAL MOISTURE CONTENT — PLASTIC LIMIT — LIQUID LIMIT — 10 20 30 40

WATER LEVEL: "Dry"
WATER NOTE: At Completion
DATE: 9/11/13

SYMBOLS USED TO INDICATE TEST RESULTS

G - Gradation, Q - Uncon Comp, T - Triax Comp, C - Consol. — See Separate Curves

H - Penetrometer (tsf)
W - Unit Dry Wt (pcf)
D - Relative Dens (%)

Drill Rod Energy Ratio : .75
Last Calibration Date : 02/20/13
Drill Rig Number : S&ME 550(AW)

JOB: 1171-13-042A

PLATE 17

2010 NEW DEFAULT BORING LOG-W/ N60

LOG OF BORING NO. B-216
SR161/RIVERSIDE DRIVE IMPROVEMENTS
DUBLIN, OHIO

S&ME

LOCATION: **See Plate 2 of Appendix.** ELEVATION: **806.8** DATE: **9/10/13**

DRILLING METHOD: **4-1/2" O.D. Continuous-flight Auger** COMPLETION DEPTH: **9.8'**

SAMPLER(S): **2" O.D. Split-barrel Sampler**

ELEV.	DEPTH, FEET	SAMPLE NUMBER	SAMPLE	SAMPLE EFFORT	N_{60}	SAMPLE REC-%	DESCRIPTION	TEST RESULTS
806.6	0						TOPSOIL - 2 INCHES	
		1	■	2 / 2 / 2	5	67	Very-stiff to hard gray silty clay, little fine to coarse sand, trace fine gravel, slightly organic.	H=2.5-4.0 G LL=50%
802.3		2	■	3 / 4 / 3	9	67		H=1.5-3.0
	5						Stiff to very-stiff gray mottled with brown silty clay, little fine to coarse sand, little fine to coarse gravel.	
800.3		3	■	1 / 1 / 4	6	67	Very-stiff brown silty clay, trace fine to coarse sand, trace fine gravel.	H=2.3-3.5
797.8		4	■	9 / 13 / 50-4"R		87	Very-dense gray and brown fine to coarse gravel, some fine to coarse sand, some silty clay.	
797.0	10							
							- No seepage encountered. - Boring located by EMH&T. - Boring elevation provided by EMH&T.	
	15							
	20							
	25							

NATURAL CONSISTENCY INDEX — NATURAL MOISTURE CONTENT — PLASTIC LIMIT — LIQUID LIMIT — 10 20 30 40

2010 NEW DEFAULT BORING LOG-W/ N60

WATER LEVEL: "Dry"
WATER NOTE: At Completion
DATE: 9/10/13

SYMBOLS USED TO INDICATE TEST RESULTS

G - Gradation, Q - Uncon Comp, T - Triax Comp, C - Consol. — See Separate Curves

H - Penetrometer (tsf)
W - Unit Dry Wt (pcf)
D - Relative Dens (%)

Drill Rod Energy Ratio : .76
Last Calibration Date : 02/19/13
Drill Rig Number : Truck 55(AW)

JOB: 1171-13-042A

LOG OF BORING NO. B-217
SR161/RIVERSIDE DRIVE IMPROVEMENTS
DUBLIN, OHIO

S&ME

LOCATION: **See Plate 2 of Appendix.** ELEVATION: **798.5** DATE: **9/10/13**

DRILLING METHOD: **4-1/2" O.D. Continuous-flight Auger** COMPLETION DEPTH: **7.3'**

SAMPLER(S): **2" O.D. Split-barrel Sampler**

ELEV.	DEPTH, FEET	SAMPLE NUMBER	SAMPLE	SAMPLE EFFORT	N_{60}	SAMPLE REC-%	DESCRIPTION	NATURAL CONSISTENCY INDEX / NATURAL MOISTURE CONTENT (PLASTIC LIMIT — LIQUID LIMIT; 10 20 30 40)	TEST RESULTS
	0						ASPHALT - 12 INCHES		
797.5									
797.0							GRANULAR BASE - 6 INCHES		
796.0		1		4 / 3 / 3	8	100	Medium-stiff to stiff dark-gray silty clay, trace fine to coarse sand, little fine to coarse gravel.		H=0.5-1.5
		1A				100	Medium-stiff to stiff brown silty clay, little fine to coarse sand, trace fine gravel.		H=0.5-1.5 G LL=54%
794.0		2		4 / 2 / 4	8	100			
793.0	5						Stiff to very-stiff brown silty clay, little fine to coarse sand, some fine to coarse gravel.		H=1.0-2.5
791.2		3		2 / 23 / 50-3"R		67	Very-stiff brown silty clay, little fine to coarse sand, little fine to coarse gravel, contains few silt lenses.		H=2.5-3.0
	10						- No seepage encountered. - Encountered auger refusal on limestone bedrock at 7.3'. - Boring located using field pacing and taping methods and should be considered approximate. - Boring elevation provided by EMH&T.		
	15								
	20								
	25								

2010 NEW DEFAULT BORING LOG-W/ N60

WATER LEVEL: "Dry"
WATER NOTE: At Completion
DATE: 9/10/13

SYMBOLS USED TO INDICATE TEST RESULTS

G - Gradation, Q - Uncon Comp, T - Triax Comp, C - Consol. — See Separate Curves

H - Penetrometer (tsf)
W - Unit Dry Wt (pcf)
D - Relative Dens (%)

Drill Rod Energy Ratio : .76
Last Calibration Date : 02/19/13
Drill Rig Number : Truck 55(AW)

JOB: 1171-13-042A

LOG OF BORING NO. B-218
SR161/RIVERSIDE DRIVE IMPROVEMENTS
DUBLIN, OHIO

S&ME

LOCATION: See Plate 2 of Appendix. ELEVATION: 798.9 DATE: 9/11/13

DRILLING METHOD: 4-1/2" O.D. Continuous-flight Auger COMPLETION DEPTH: 10.0'

SAMPLER(S): 2" O.D. Split-barrel Sampler

ELEV.	DEPTH, FEET	SAMPLE NUMBER	SAMPLE	SAMPLE EFFORT	N_{60}	SAMPLE REC-%	DESCRIPTION	NATURAL CONSISTENCY INDEX / NATURAL MOISTURE CONTENT (PLASTIC LIMIT – LIQUID LIMIT; 10 20 30 40)	TEST RESULTS
	0						ASPHALT - 12 INCHES		
797.9									
797.5							GRANULAR BASE - 4 INCHES		
		1	■	9 / 10 / 10	25	100	Medium-dense gray and brown fine to coarse sand, "and" fine to coarse gravel, little silt, trace clay.	●	G
795.6									
		2	■	6 / 2 / 2	5	67	Very-loose gray fine to coarse gravel, some fine to coarse sand, little silty clay.		
793.4	5								
		3	■	1 / 2 / 7	11	100	Loose to medium-dense brown and gray fine to coarse gravel, some to "and" fine to coarse sand, little to some silty clay.		
		4	■	2 / 2 / 4	8	100			
788.9	10						- No seepage encountered. - Caved at 6.0'. - Boring located using field pacing and taping methods and should be considered approximate. - Boring elevation provided by EMH&T.		
	15								
	20								
	25								

2010 NEW DEFAULT BORING LOG-W/ N60

WATER LEVEL: "Dry" | Caved at 6.0'
WATER NOTE: At Completion | Caved at 6.0'
DATE: 9/11/13 | 9/11/13

SYMBOLS USED TO INDICATE TEST RESULTS
G - Gradation, Q - Uncon Comp, T - Triax Comp, C - Consol. — See Separate Curves
H - Penetrometer (tsf), W - Unit Dry Wt (pcf), D - Relative Dens (%)

Drill Rod Energy Ratio : .75
Last Calibration Date : 02/20/13
Drill Rig Number : S&ME 550(AW)

JOB: 1171-13-042A

LOG OF BORING NO. B-220
SR161/RIVERSIDE DRIVE IMPROVEMENTS
DUBLIN, OHIO

S&ME

LOCATION: See Plate 2 of Appendix. ELEVATION: 803 ± DATE: 9/9/13

DRILLING METHOD: 4-1/2" O.D. Continuous-flight Auger COMPLETION DEPTH: 8.7'

SAMPLER(S): 2" O.D. Split-barrel Sampler

ELEV.	DEPTH, FEET	SAMPLE NUMBER	SAMPLE	SAMPLE EFFORT	N_{60}	SAMPLE REC-%	DESCRIPTION	NATURAL CONSISTENCY INDEX / NATURAL MOISTURE CONTENT (PLASTIC LIMIT — LIQUID LIMIT; 10 20 30 40)	TEST RESULTS
802.6	0						ASPHALT - 4 INCHES		
802.1							GRANULAR BASE - 5 INCHES		
		1	■	7 / 7 / 6	16	100	FILL: Medium-dense gray fine gravel, some fine to coarse sand, trace silt.		
800.0									
		2	■	2 / 2 / 3	6	100	FILL: Loose gray fine to coarse sand, "and" fine to coarse gravel, trace silt, trace clay.	●	G
797.5	5								
		3	■	1 / 2 / 1	4	67	FILL: Very-loose gray and brown fine gravel, some fine to coarse sand, trace silt.		
795.0									
794.3		4	■	50-2"R		100	Weathered limestone		
	10						- No seepage encountered. - Encountered auger refusal on limestone bedrock at 8.7'. - Boring located using field pacing and taping methods and should be considered approximate. - Elevations estimated from Google Earth® and should be considered approximate.		
	15								
	20								
	25								

2010 NEW DEFAULT BORING LOG-W/ N60

WATER LEVEL: ▽ "Dry" ▼
WATER NOTE: At Completion
DATE: 9/9/13

SYMBOLS USED TO INDICATE TEST RESULTS

G - Gradation, Q - Uncon Comp, T - Triax Comp, C - Consol. — See Separate Curves

H - Penetrometer (tsf)
W - Unit Dry Wt (pcf)
D - Relative Dens (%)

Drill Rod Energy Ratio : .76
Last Calibration Date : 02/19/13
Drill Rig Number : Truck 55(AW)

JOB: 1171-13-042A

LOG OF BORING NO. B-221
SR161/RIVERSIDE DRIVE IMPROVEMENTS
DUBLIN, OHIO

S&ME

LOCATION: **See Plate 2 of Appendix.** ELEVATION: **774 ±** DATE: **9/9/13**

DRILLING METHOD: **4-1/2" O.D. Continuous-flight Auger** COMPLETION DEPTH: **10.0'**

SAMPLER(S): **2" O.D. Split-barrel Sampler**

ELEV.	DEPTH, FEET	SAMPLE NUMBER	SAMPLE	SAMPLE EFFORT	N_{60}	SAMPLE REC-%	DESCRIPTION	NATURAL CONSISTENCY INDEX / NATURAL MOISTURE CONTENT (PLASTIC LIMIT – LIQUID LIMIT; 10 20 30 40)	TEST RESULTS
773.7	0						ASPHALT - 3 INCHES		
773.1							GRANULAR BASE - 7 INCHES		
		1	■	4 / 4 / 4	10	67	FILL: Stiff to very-stiff brown and gray silty clay, little fine to coarse sand, little fine to coarse gravel.		H=1.5-2.5 G
771.2							FILL: Stiff to very-stiff gray silty clay, little fine to coarse sand, trace fine gravel.		
		2	■	3 / 3 / 4	9	100			H=1.0-2.5
	5								
768.5							FILL: Medium-dense gray fine to coarse gravel, some fine to coarse sand, "and" organic clayey silt, contains few cobbles.		
		3	■	4 / 7 / 5	15	100			
766.0							Medium-dense gray and brown fine to coarse gravel, some fine to coarse sand, some silty clay.		
		4	■	5 / 6 / 9	19	100			
764.0	10								
							- No seepage encountered. - Encountered cobbles at 6.5'. - Boring located using field pacing and taping methods and should be considered approximate. - Elevations estimated from available topographic mapping and should be considered approximate.		
	15								
	20								
	25								

2010 NEW DEFAULT BORING LOG-W/ N60

WATER LEVEL: "Dry"
WATER NOTE: At Completion
DATE: 9/9/13

SYMBOLS USED TO INDICATE TEST RESULTS

G - Gradation, Q - Uncon Comp, T - Triax Comp, C - Consol. — See Separate Curves

H - Penetrometer (tsf)
W - Unit Dry Wt (pcf)
D - Relative Dens (%)

Drill Rod Energy Ratio : .76
Last Calibration Date : 02/19/13
Drill Rig Number : Truck 55(AW)

JOB: 1171-13-042A

LOG OF BORING NO. B-222
SR161/RIVERSIDE DRIVE IMPROVEMENTS
DUBLIN, OHIO

S&ME

LOCATION: See Plate 2 of Appendix. ELEVATION: 762 ± DATE: 9/16/13

DRILLING METHOD: 3-1/4" I.D. Hollow-stem Auger COMPLETION DEPTH: 18.9'

SAMPLER(S): 2" O.D. Split-barrel Sampler, NQ Rock Core Barrel

ELEV.	DEPTH, FEET	SAMPLE NUMBER	SAMPLE	SAMPLE EFFORT	N_{60}	SAMPLE REC-%	DESCRIPTION	NATURAL CONSISTENCY INDEX / NATURAL MOISTURE CONTENT (PLASTIC LIMIT – LIQUID LIMIT; 10 20 30 40)	TEST RESULTS
761.5	0						TOPSOIL - 6 INCHES		
		1		1 / 2 / 4	8	100	Medium-stiff dark-gray organic clayey silt, little fine to coarse sand, trace fine gravel.		H=0.5-1.0
758.3		2		4 / 8 / 8	21	100	Medium-dense to very-dense brown fine to coarse gravel, some fine to coarse sand, some silt, little clay.		G
	5	3		3 / 50-5"R		60			
753.1		4		50-3"R		20			
		5		REC 100% RQD 100%			Hard gray-brown limestone, slightly weathered, very thickly bedded, ferriferous, slightly crystalline, stylolitic, cherty, fossiliferous. - Qu= 9,717 psi from 9.6' to 10.1'		
	10	6		REC 100% RQD 62%					
	15	7		REC 98% RQD 98%			- Qu= 11,365 psi from 15.6' to 16.1'		
743.1	20						- Groundwater measured at 1.5' prior to adding water for rock core. - Boring located by EMH&T. - Elevations estimated from available topographic mapping and should be considered approximate.		
	25								

2010 NEW DEFAULT BORING LOG-W/ N60

WATER LEVEL: ▽ ▼
WATER NOTE:
DATE:

SYMBOLS USED TO INDICATE TEST RESULTS

G - Gradation, Q - Uncon Comp, T - Triax Comp, C - Consol. — See Separate Curves

H - Penetrometer (tsf)
W - Unit Dry Wt (pcf)
D - Relative Dens (%)

Drill Rod Energy Ratio : .795
Last Calibration Date : 10/14/11
Drill Rig Number : D50

JOB: 1171-13-042A

LOG OF BORING NO. B-223
SR161/RIVERSIDE DRIVE IMPROVEMENTS
DUBLIN, OHIO

S&ME

LOCATION: **See Plate 2 of Appendix.** ELEVATION: **795.7** DATE: **9/10/13**

DRILLING METHOD: **4-1/2" O.D. Continuous-flight Auger** COMPLETION DEPTH: **16.0'**

SAMPLER(S): **2" O.D. Split-barrel Sampler, NQ Rock Core Barrel**

ELEV.	DEPTH, FEET	SAMPLE NUMBER	SAMPLE	SAMPLE EFFORT	N_{60}	SAMPLE REC-%	DESCRIPTION	NATURAL CONSISTENCY INDEX / NATURAL MOISTURE CONTENT (PLASTIC LIMIT — LIQUID LIMIT) 10 20 30 40	TEST RESULTS
795.0	0						ASPHALT - 7 INCHES		
794.7							GRANULAR BASE - 5 INCHES		
		1		50-1"R		100	Very-dense gray fine to coarse gravel, little fine to coarse sand, trace silt, contains many limestone fragments.		
		2		50-2"R		100			
	5								
789.7		3		50-0"R		100	Hard gray-brown limestone, highly weathered, very thickly bedded, stylolitic, fossiliferous, vuggy, many horizontal and vertical fractures.		
		4		REC 94% RQD 0%					
	10								
		5		REC 100% RQD 6%			- Qu=8,415 psi from 12.3' to 12.6'.		
	15								
779.7							- No seepage or groundwater encountered prior to adding water for rock core. - Boring located using field pacing and taping methods and should be considered approximate. - Boring elevation provided by EMH&T.		
	20								
	25								

2010 NEW DEFAULT BORING LOG-W/ N60

WATER LEVEL: ▽ ▼
WATER NOTE:
DATE:

SYMBOLS USED TO INDICATE TEST RESULTS

G - Gradation
Q - Uncon Comp
T - Triax Comp
C - Consol.
(See Separate Curves)

H - Penetrometer (tsf)
W - Unit Dry Wt (pcf)
D - Relative Dens (%)

Drill Rod Energy Ratio : .76
Last Calibration Date : 02/19/13
Drill Rig Number : Truck 55(AW)

JOB: 1171-13-042A

1 Pavement Core X-201

2 Pavement Core X-207

3 Pavement Core X-212

4 Pavement Core X-219

PLATE 25

S&ME	**SR 161 & Riverside Drive Intersection Improvements** **Dublin, Ohio**	1171-13-042A SR 161/Riverside Dr. Improvements	
		Taken by: PMJ	Date Taken: 9/15/13

1 Photograph of B-210 bedrock core from 6.1' to 11.1'

2 Photograph of B-214 bedrock core from 4.2' to 14.2'

3 Photograph of B-222 bedrock core from 8.9' to 18.9'

4 Photograph of B-223 bedrock core from 6.0' to 16.0'

PLATE 26

S&ME	SR 161 & Riverside Drive Intersection Improvements Dublin, Ohio	1171-13-042A SR 161/Riverside Dr. Improvements	
		Taken by: PMJ	Date Taken: 9/18/13

SUMMARY OF LABORATORY TEST RESULTS

BORING	G'int Id.	MC	LL	PL	PI	GRADATION			COMPACTION		TRIAXIAL					DIRECT SHEAR			UNCONFIN COMPRESS	CONSOLID.	SPECIFIC GRAVITY	UNIT WEIGHT DRY	REMOLDED	PERMEABILITY				RELATIVE DENSITY	LOI	ROCK CORE	SHELBY TUBE	pH
						sieve	Hydrometer short	Hydrometer long	standard	modified	unconsol. undrain	consolid undrain	w/pores	drained	drained	undrain	residual							cohesive	non/cohes	rigid wall	flexible wall					
		%	%	%	%	* SEE INDIVIDUAL TEST CURVES																PCF						%	%			
B-202	**2.25**	**17**	**39**	**19**	**20**	*	*																									
B-203	**3.25**	**14**	**42**	**21**	**21**	*	*																									
B-204	**3.25**	**8**	**28**	**18**	**10**	*	*																									
B-205	**2.25**	**10**	**35**	**17**	**18**	*	*																									
B-206	**2.25**	**16**	**28**	**14**	**14**	*	*																									
B-208	**4.25**	**12**	**35**	**19**	**16**	*	*																									
B-209	**1.75**	**8**	**30**	**17**	**13**	*	*																									
B-210	**1.75**	**13**	**31**	**18**	**13**	*	*																									
B-210	**6.10**																													*		
B-212	**1.75**	**25**	**67**	**22**	**45**	*	*																									
B-213	**1.75**	**22**	**56**	**24**	**32**	*	*																									
B-214	**1.75**	**21**	**56**	**24**	**32**	*	*																									
B-214	**4.20**																													*		
B-215	**1.75**	**20**	**31**	**18**	**13**	*	*																									
B-216	**1.75**	**19**	**50**	**24**	**26**	*	*																									
B-217	**2.75**	**28**	**54**	**23**	**31**	*	*																									
B-218	**2.25**	**9**	**21**	**17**	**4**	*	*																									
B-220	**4.25**	**5**	**NP**	**NP**	**NP**	*	*																									
B-221	**1.75**	**17**	**37**	**18**	**19**	*	*																									
B-222	**4.25**	**21**	**32**	**22**	**10**	*	*																									

S&ME

TESTING SUMMARY - STANDARD

PROJECT SR161/RIVERSIDE DRIVE IMPROVEMENTS
LOCATION DUBLIN, OHIO
JOB NO. 1171-13-042A DATE 10/14/13

SUM REG

SUMMARY OF LABORATORY TEST RESULTS

BORING	G'int Id.	MC	LL	PL	PI	GRADATION			COMPACTION		TRIAXIAL					DIRECT SHEAR			UNCONFIN COMPRESS	CONSOLID.	SPECIFIC GRAVITY	UNIT WEIGHT DRY	REMOLDED	PERMEABILITY				RELATIVE DENSITY	LOI	ROCK CORE	SHELBY TUBE	pH
						sieve	Hydrometer short	Hydrometer long	standard	modified	unconsol. undrain	consolid undrain	w/ pores	drained	drained	undrain	residual							cohesive	non/cohes	rigid wall	flexible wall					
		%	%	%	%	* SEE INDIVIDUAL TEST CURVES																PCF						%	%			
B-222	**9.60**																	*												*		
B-222	**15.60**																	*														
B-223	**12.30**																	*												*		

SUM REG

S&ME

TESTING SUMMARY - STANDARD

PROJECT SR161/RIVERSIDE DRIVE IMPROVEMENTS
LOCATION DUBLIN, OHIO
JOB NO. 1171-13-042A DATE 10/14/13

ATTERBERG LIMITS' RESULTS

AASHTO CLASSIFICATION

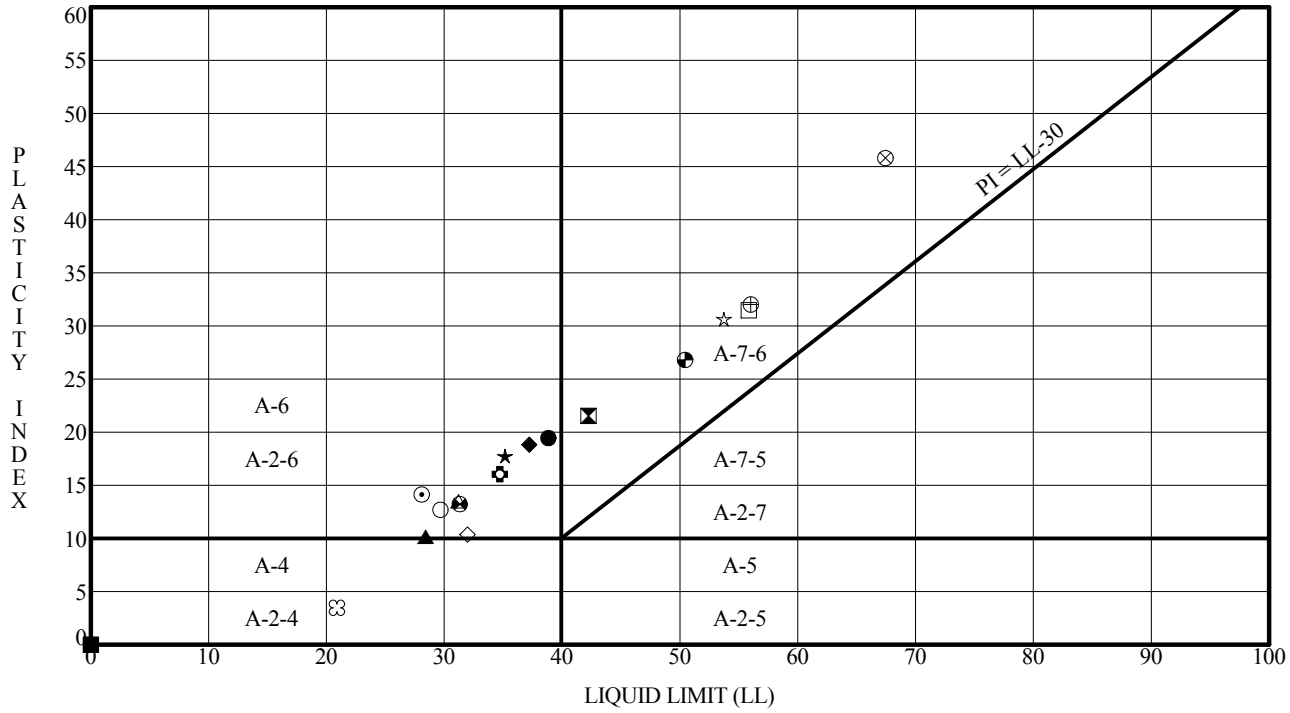

ALPI-HRB

	Specimen Id.	Depth	MC	LL	PL	PI	Fines	ODOT Classification
●	B-202	2.25	16.8	38.8	19.4	20.0	53.9	A-6b(8)
⊠	B-203	3.25	13.8	42.2	20.7	21.0	36.9	A-7-6(3)
▲	B-204	3.25	7.7	28.4	18.3	10.0	24.9	A-2-4(0)
★	B-205	2.25	10.2	35.2	17.4	18.0	26.6	A-2-6(1)
⊙	B-206	2.25	15.8	28.1	14.0	14.0	60.6	A-6a(7)
✿	B-208	4.25	12.4	34.7	18.7	16.0	45.8	A-6b(4)
○	B-209	1.75	8.4	29.7	17.0	13.0	27.6	A-2-6(0)
△	B-210	1.75	13.3	31.2	17.7	13.0	59.8	A-6a(6)
⊗	B-212	1.75	25.1	67.4	21.6	45.0	88.3	A-7-6(20)
⊕	B-213	1.75	22.5	56.0	24.0	32.0	87.4	A-7-6(19)
□	B-214	1.75	20.8	55.9	24.4	32.0	89.5	A-7-6(19)
⊛	B-215	1.75	19.8	31.3	18.1	13.0	65.3	A-6a(7)
◕	B-216	1.75	19.5	50.4	23.6	26.0	82.3	A-7-6(16)
☆	B-217	2.75	27.6	53.7	23.1	31.0	80.2	A-7-6(19)
✿	B-218	2.25	9.2	20.9	17.4	4.0	25.8	A-2-4(0)
■	B-220	4.25	4.9	NP	NP	NP	12.6	A-1-a(0)
◆	B-221	1.75	16.9	37.2	18.4	19.0	61.2	A-6b(9)
◇	B-222	4.25	20.5	32.0	21.6	10.0	48.9	A-4a(3)

PROJECT SR161/RIVERSIDE DRIVE IMPROVEMENTS
LOCATION DUBLIN, OHIO
JOB NO. 1171-13-042A **DATE** 10/14/13

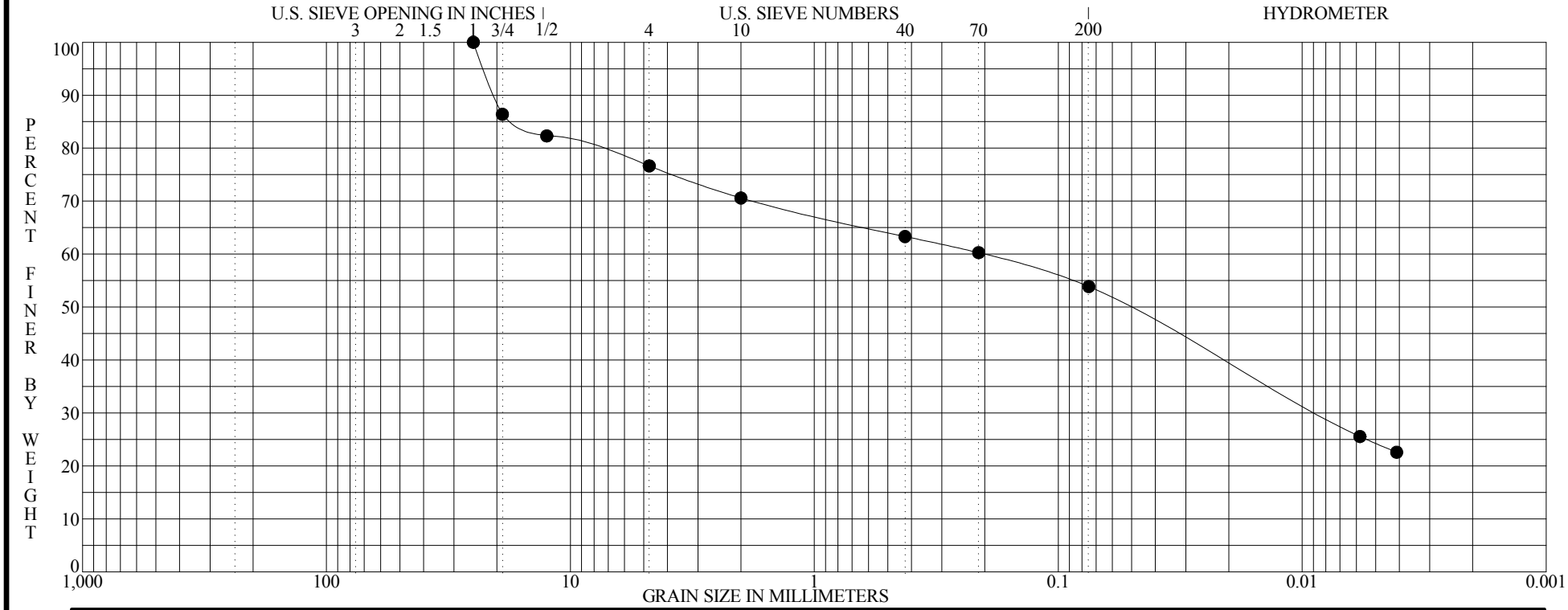

BOULDERS	COBBLES	GRAVEL		SAND			SILT OR CLAY
		coarse	fine	coarse	medium	fine	

	Specimen Identification - Depth	Classification	MC%	LL	PL	PI	Cc	Cu
●	**B-202 S-1 1.5' to 2.1'**	**Dark-gray mottled with dark-brown silty clay, some fine to coarse sand, some fine to coarse gravel.**	**17**	**39**	**19**	**20**		

	Specimen Identification - Depth	D100	D95	D60	D50	D10	%Gravel	%Sand	%Silt	%Clay
●	**B-202 S-1 1.5' to 2.1'**	**25.0000**	**22.6008**	**0.2026**	**0.0528**		**23.3**	**22.8**	**29.6**	**24.3**

ASTM D422

GRADATION CURVE

PROJECT: SR161/RIVERSIDE DRIVE IMPROVEMENTS
LOCATION: DUBLIN, OHIO
JOB NO.: 1171-13-042A
DATE: 10/14/13

GRN-REG

PLATE 30

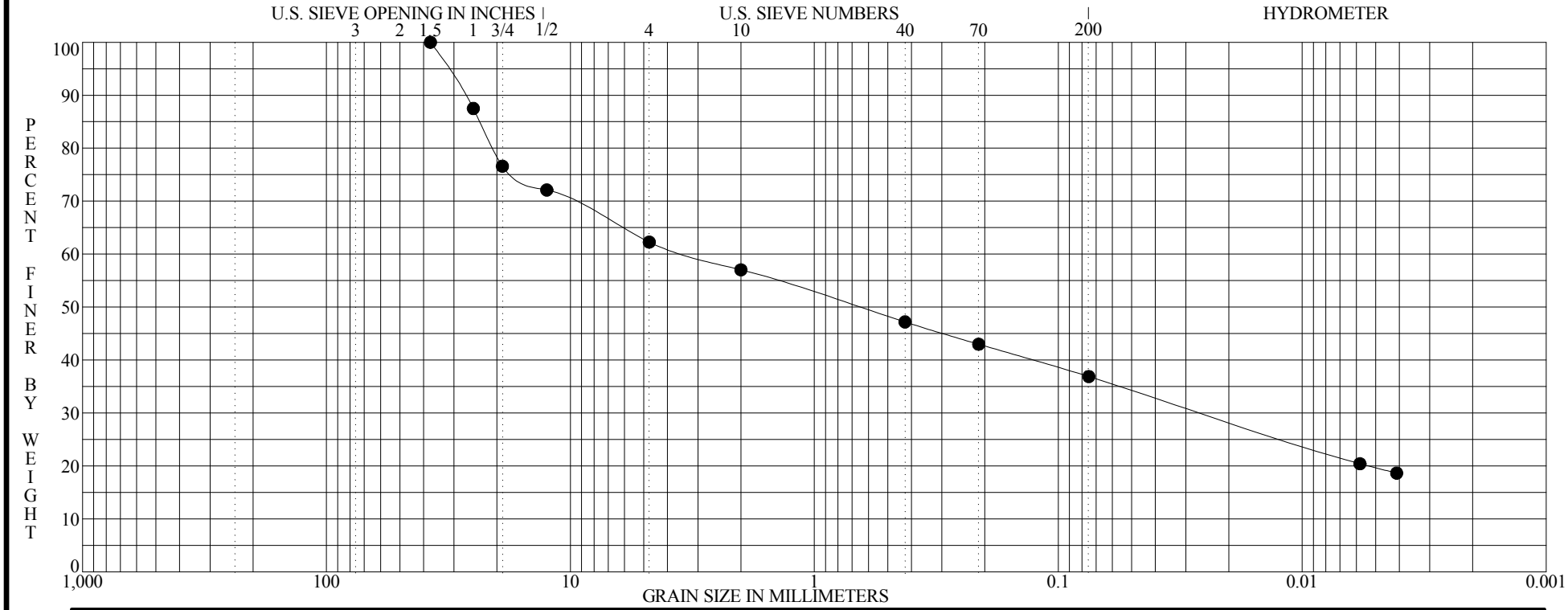

BOULDERS	COBBLES	GRAVEL		SAND			SILT OR CLAY
		coarse	fine	coarse	medium	fine	

	Specimen Identification - Depth	Classification	MC%	LL	PL	PI	Cc	Cu
●	**B-203 S-2 2.5' to 3.0'**	**Gray, brown and dark-brown fine to coarse gravel, some fine to coarse sand, "and" silty clay.**	**14**	**42**	**21**	**21**		

	Specimen Identification - Depth	D100	D95	D60	D50	D10	%Gravel	%Sand	%Silt	%Clay
●	**B-203 S-2 2.5' to 3.0'**	**37.5000**	**31.8850**	**3.2683**	**0.6614**		**37.7**	**25.4**	**17.2**	**19.7**

ASTM D422

GRADATION CURVE

PROJECT SR161/RIVERSIDE DRIVE IMPROVEMENTS
LOCATION DUBLIN, OHIO
JOB NO. 1171-13-042A **DATE** 10/14/13

GRN-REG

PLATE 31

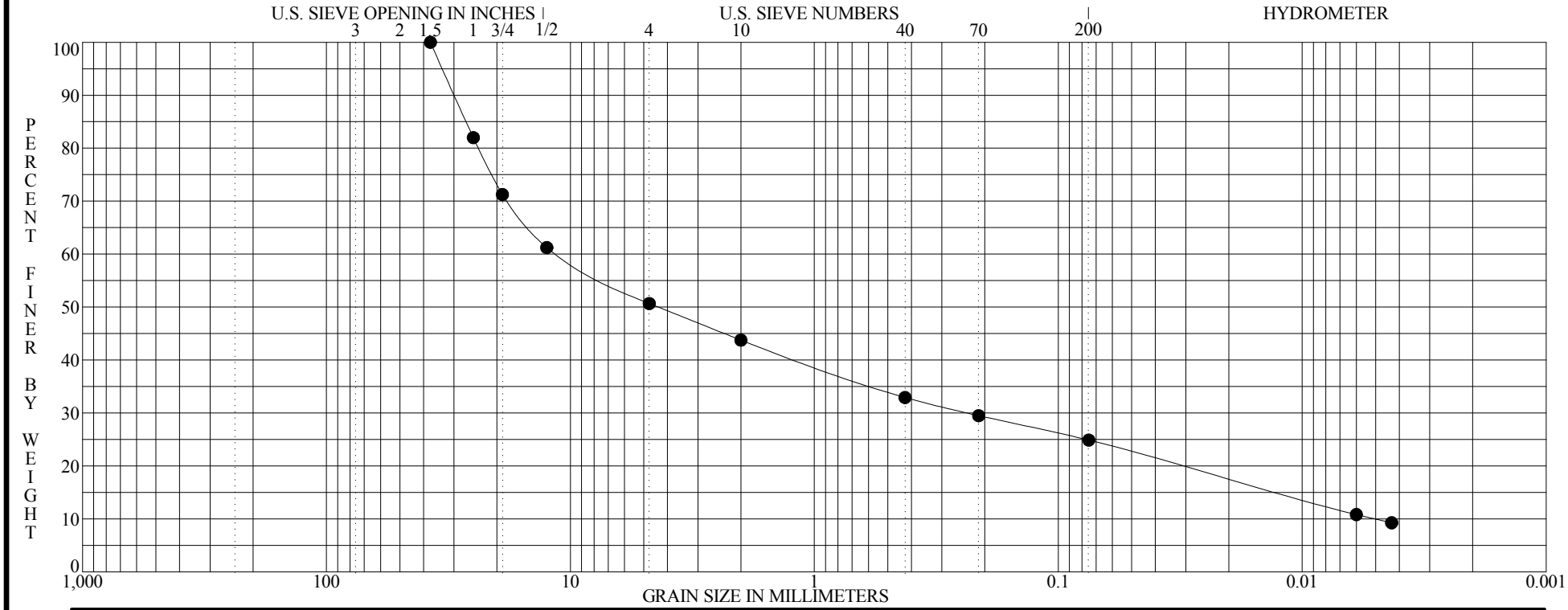

BOULDERS	COBBLES	GRAVEL		SAND			SILT OR CLAY
		coarse	fine	coarse	medium	fine	

	Specimen Identification - Depth	Classification	MC%	LL	PL	PI	Cc	Cu
●	**B-204 S-2 2.5' to 3.5'**	**Gray and brown fine to coarse gravel, some fine to coparse sand, some clayey silt.**	**8**	**28**	**18**	**10**	**0.983**	**2218.608**

	Specimen Identification - Depth	D100	D95	D60	D50	D10	%Gravel	%Sand	%Silt	%Clay
●	**B-204 S-2 2.5' to 3.5'**	**37.5000**	**33.5064**	**11.1667**	**4.3696**	**0.0050**	**49.3**	**25.8**	**14.9**	**10.0**

ASTM D422

GRADATION CURVE

PROJECT SR161/RIVERSIDE DRIVE IMPROVEMENTS
LOCATION DUBLIN, OHIO
JOB NO. 1171-13-042A **DATE** 10/14/13

GRN-REG

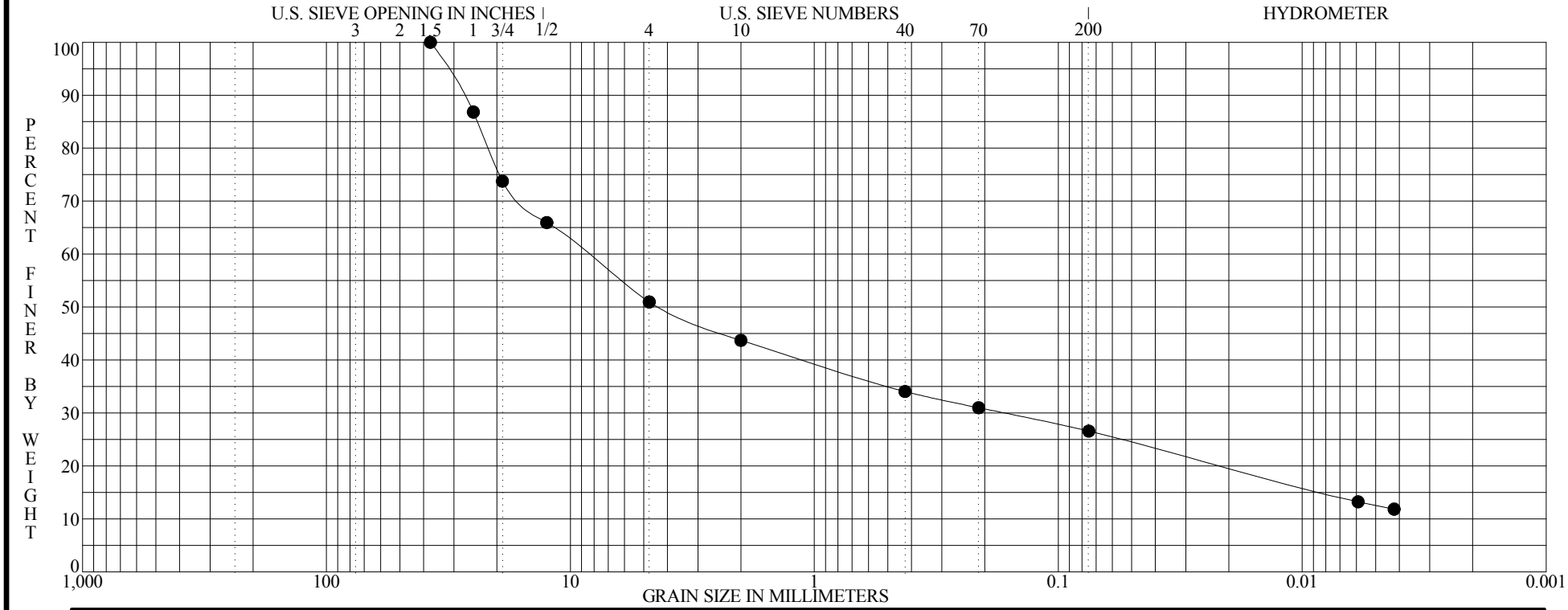

BOULDERS	COBBLES	GRAVEL		SAND			SILT OR CLAY
		coarse	fine	coarse	medium	fine	

	Specimen Identification - Depth	Classification	MC%	LL	PL	PI	Cc	Cu
●	**B-205 S-1 1.5' to 3.0'**	**Gray and dark-brown fine to coarse gravel, some fine to coarse sand, some silty clay.**	**10**	**35**	**17**	**18**		

	Specimen Identification - Depth	D100	D95	D60	D50	D10	%Gravel	%Sand	%Silt	%Clay
●	**B-205 S-1 1.5' to 3.0'**	**37.5000**	**32.1513**	**8.5129**	**4.2317**		**49.0**	**24.4**	**14.0**	**12.6**

ASTM D422

GRADATION CURVE

PROJECT SR161/RIVERSIDE DRIVE IMPROVEMENTS
LOCATION DUBLIN, OHIO
JOB NO. 1171-13-042A **DATE** 10/14/13

GRN-REG

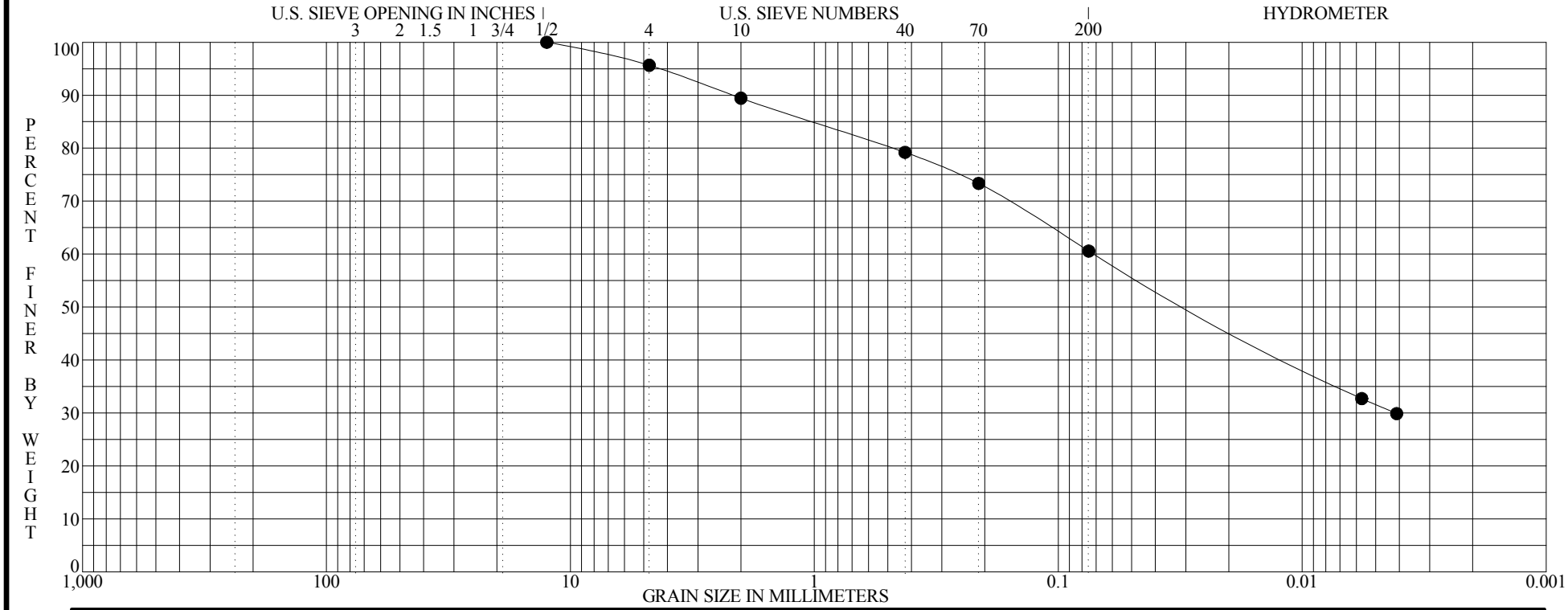

BOULDERS	COBBLES	GRAVEL		SAND			SILT OR CLAY
		coarse	fine	coarse	medium	fine	

	Specimen Identification - Depth	Classification	MC%	LL	PL	PI	Cc	Cu
●	**B-206 S-1 1.5' to 2.2'**	**Brown mottled with gray and dark-gray silty clay, some fine to coarse sand, trace fine gravel.**	**16**	**28**	**14**	**14**		

	Specimen Identification - Depth	D100	D95	D60	D50	D10	%Gravel	%Sand	%Silt	%Clay
●	**B-206 S-1 1.5' to 2.2'**	**12.5000**	**4.3347**	**0.0711**	**0.0282**		**4.3**	**35.1**	**29.0**	**31.6**

ASTM D422

GRADATION CURVE

PROJECT SR161/RIVERSIDE DRIVE IMPROVEMENTS
LOCATION DUBLIN, OHIO
JOB NO. 1171-13-042A **DATE** 10/14/13

GRN-REG

PLATE 34

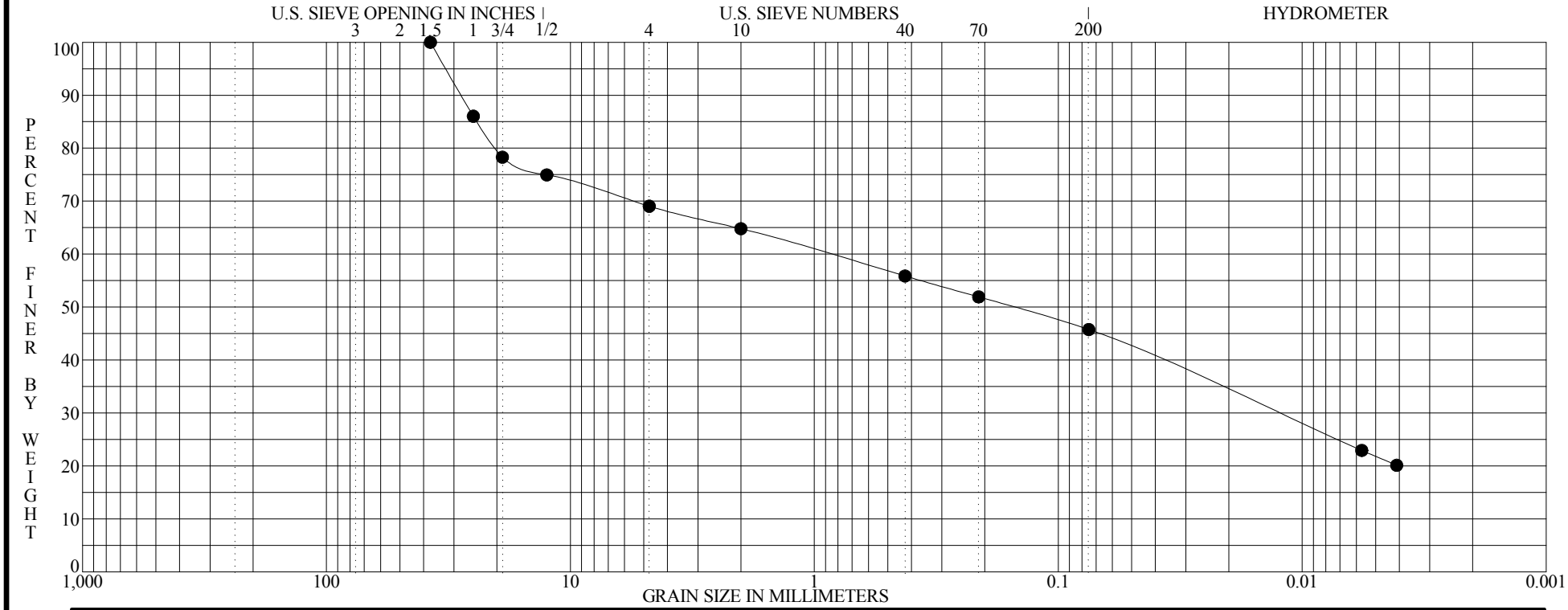

BOULDERS	COBBLES	GRAVEL		SAND			SILT OR CLAY
		coarse	fine	coarse	medium	fine	

	Specimen Identification - Depth	Classification	MC%	LL	PL	PI	Cc	Cu
●	**B-208 S-2 3.5' to 4.5'**	**Brown and gray fine to coarse gravel, some fine to coarse sand, "and" silty clay.**	**12**	**35**	**19**	**16**		

	Specimen Identification - Depth	D100	D95	D60	D50	D10	%Gravel	%Sand	%Silt	%Clay
●	**B-208 S-2 3.5' to 4.5'**	**37.5000**	**32.4315**	**0.8700**	**0.1534**		**31.0**	**23.3**	**23.9**	**21.8**

ASTM D422

GRADATION CURVE

PROJECT SR161/RIVERSIDE DRIVE IMPROVEMENTS
LOCATION DUBLIN, OHIO
JOB NO. 1171-13-042A **DATE** 10/14/13

GRN-REG

PLATE 35

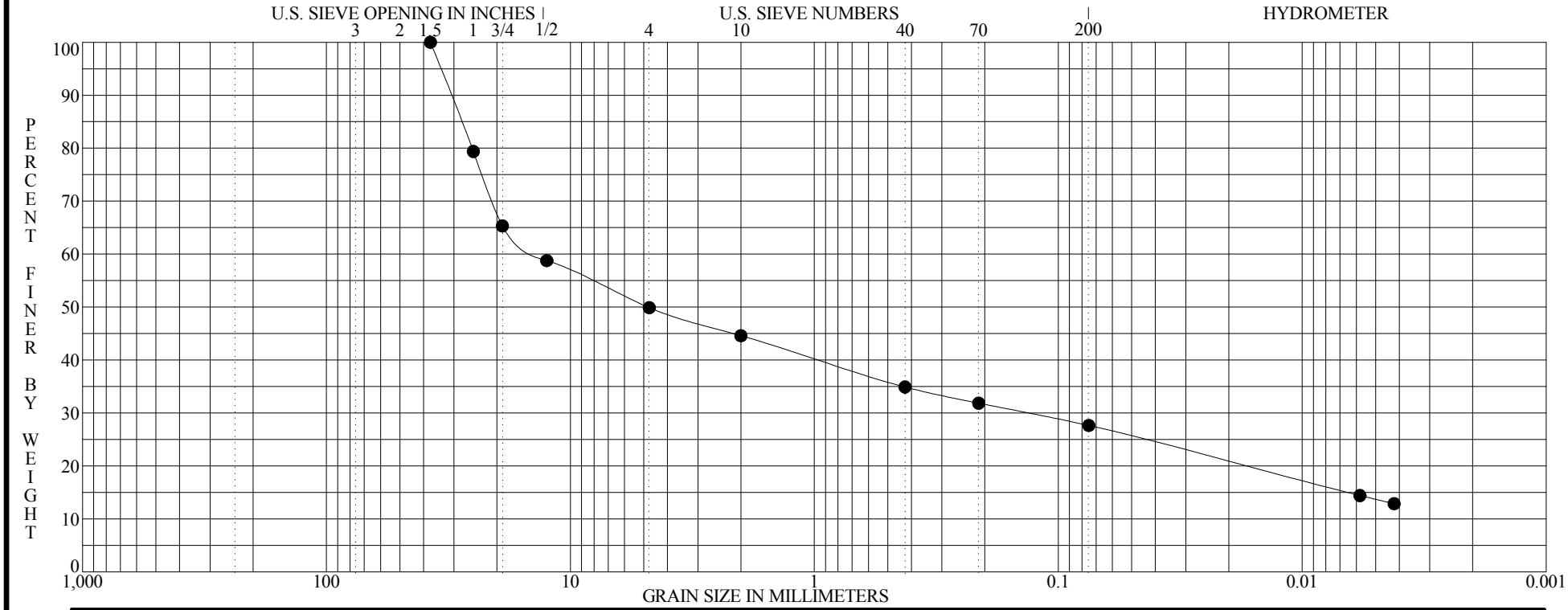

BOULDERS	COBBLES	GRAVEL		SAND			SILT OR CLAY
		coarse	fine	coarse	medium	fine	

	Specimen Identification - Depth	Classification	MC%	LL	PL	PI	Cc	Cu
●	**B-209 S-1 1.0' to 2.5'**	**Gray and dark-gray fine to coarse gravel, some fine to coarse sand, some silty clay.**	**8**	**30**	**17**	**13**		

	Specimen Identification - Depth	D100	D95	D60	D50	D10	%Gravel	%Sand	%Silt	%Clay
●	**B-209 S-1 1.0' to 2.5'**	**37.5000**	**33.9876**	**13.5219**	**4.8124**		**50.1**	**22.2**	**13.9**	**13.7**

ASTM D422

GRADATION CURVE

PROJECT SR161/RIVERSIDE DRIVE IMPROVEMENTS
LOCATION DUBLIN, OHIO
JOB NO. 1171-13-042A **DATE** 10/14/13

GRN-REG

PLATE 36

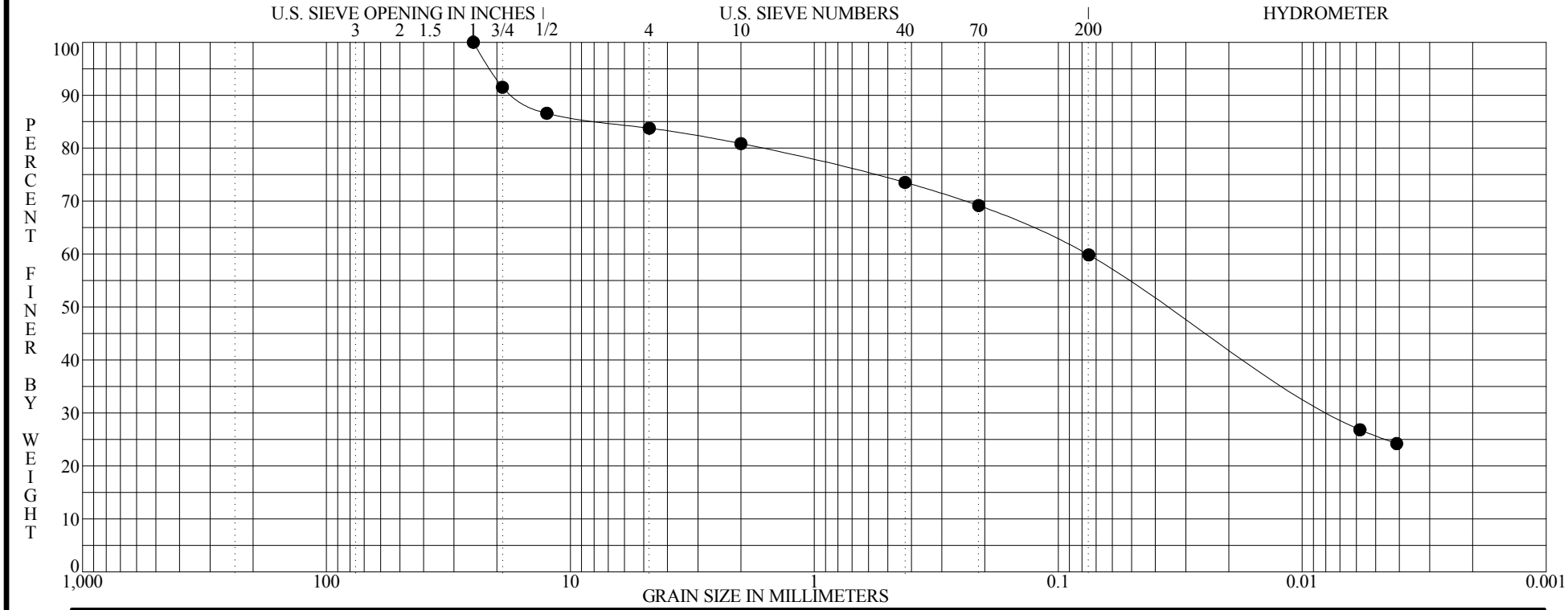

BOULDERS	COBBLES	GRAVEL		SAND			SILT OR CLAY
		coarse	fine	coarse	medium	fine	

	Specimen Identification - Depth	Classification	MC%	LL	PL	PI	Cc	Cu
●	**B-210 S-1 1.0' to 2.5'**	**Brown mottled with dark-gray silty clay, some fine to coarse sand, little fine to coarse gravel.**	**13**	**31**	**18**	**13**		

	Specimen Identification - Depth	D100	D95	D60	D50	D10	%Gravel	%Sand	%Silt	%Clay
●	**B-210 S-1 1.0' to 2.5'**	**25.0000**	**21.2689**	**0.0763**	**0.0350**		**16.2**	**23.9**	**34.1**	**25.7**

ASTM D422

GRADATION CURVE

PROJECT SR161/RIVERSIDE DRIVE IMPROVEMENTS
LOCATION DUBLIN, OHIO
JOB NO. 1171-13-042A **DATE** 10/14/13

GRN-REG

PLATE 37

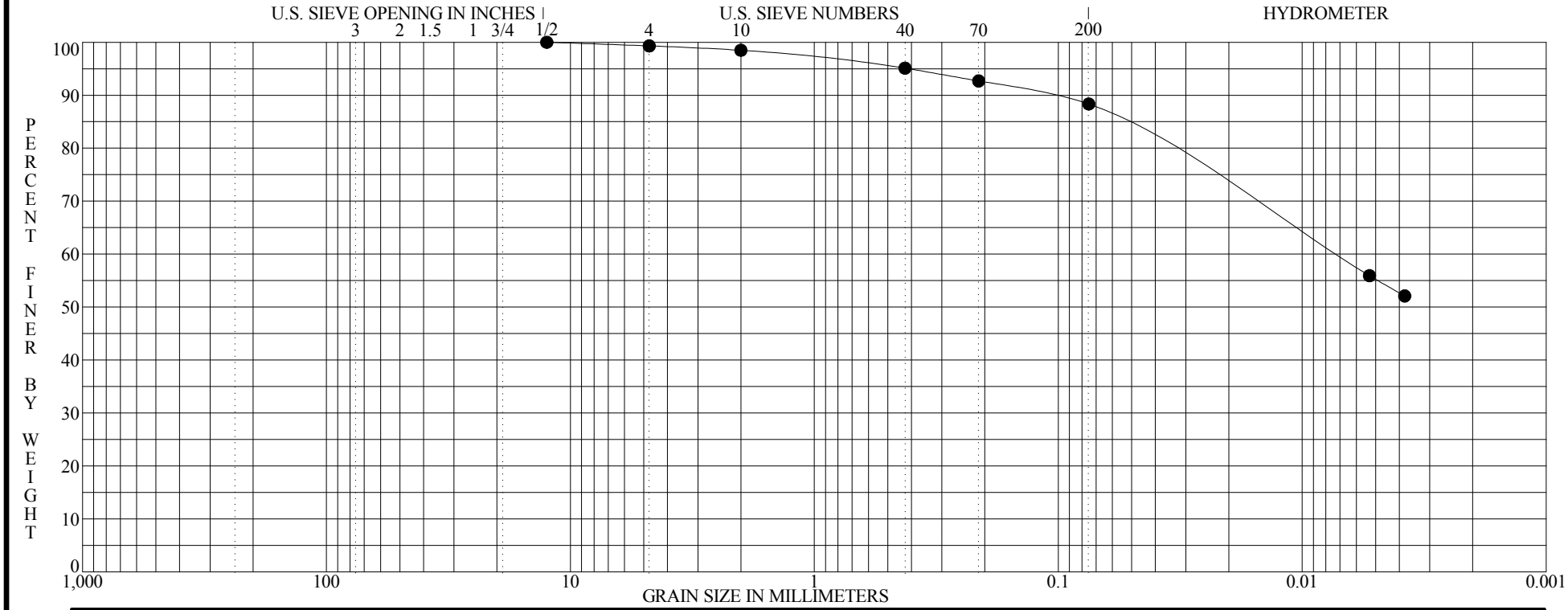

BOULDERS	COBBLES	GRAVEL		SAND			SILT OR CLAY
		coarse	fine	coarse	medium	fine	

	Specimen Identification - Depth	Classification	MC%	LL	PL	PI	Cc	Cu
●	**B-212 S-1 1.0' to 2.5'**	**Brown silty clay, little fine to coarse sand, trace fine gravel.**	**25**	**67**	**22**	**45**		

	Specimen Identification - Depth	D100	D95	D60	D50	D10	%Gravel	%Sand	%Silt	%Clay
●	**B-212 S-1 1.0' to 2.5'**	**12.5000**	**0.4116**	**0.0074**			**0.7**	**11.0**	**33.1**	**55.3**

ASTM D422

GRADATION CURVE

PROJECT SR161/RIVERSIDE DRIVE IMPROVEMENTS
LOCATION DUBLIN, OHIO
JOB NO. 1171-13-042A **DATE** 10/14/13

GRN-REG

PLATE 38

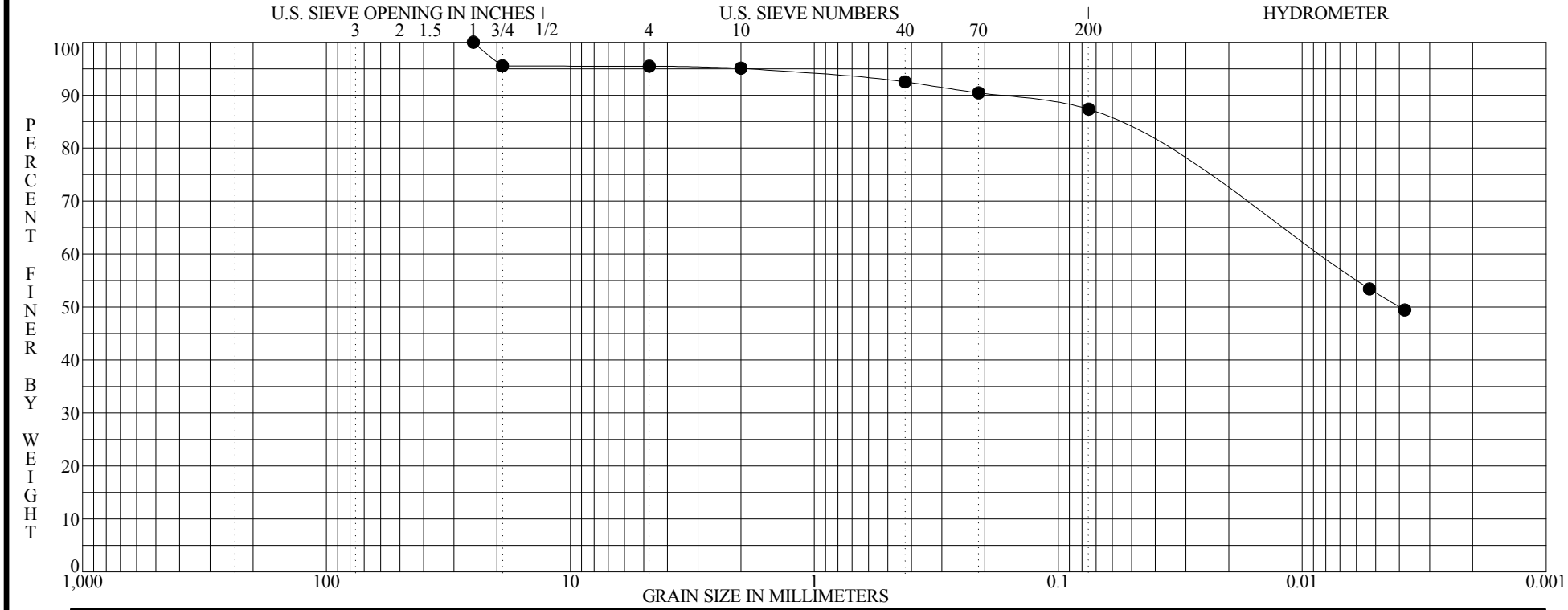

BOULDERS	COBBLES	GRAVEL		SAND			SILT OR CLAY
		coarse	fine	coarse	medium	fine	

	Specimen Identification - Depth	Classification	MC%	LL	PL	PI	Cc	Cu
●	**B-213 S-1 1.0' to 2.5'**	**Dark-gray mottled with brown silty clay, trace fine to coarse sand, trace fine gravel.**	**22**	**56**	**24**	**32**		

	Specimen Identification - Depth	D100	D95	D60	D50	D10	%Gravel	%Sand	%Silt	%Clay
●	**B-213 S-1 1.0' to 2.5'**	**25.0000**	**1.8669**	**0.0089**	**0.0040**		**4.5**	**8.1**	**34.6**	**52.7**

ASTM D422

GRADATION CURVE

PROJECT SR161/RIVERSIDE DRIVE IMPROVEMENTS
LOCATION DUBLIN, OHIO
JOB NO. 1171-13-042A **DATE** 10/14/13

GRN-REG

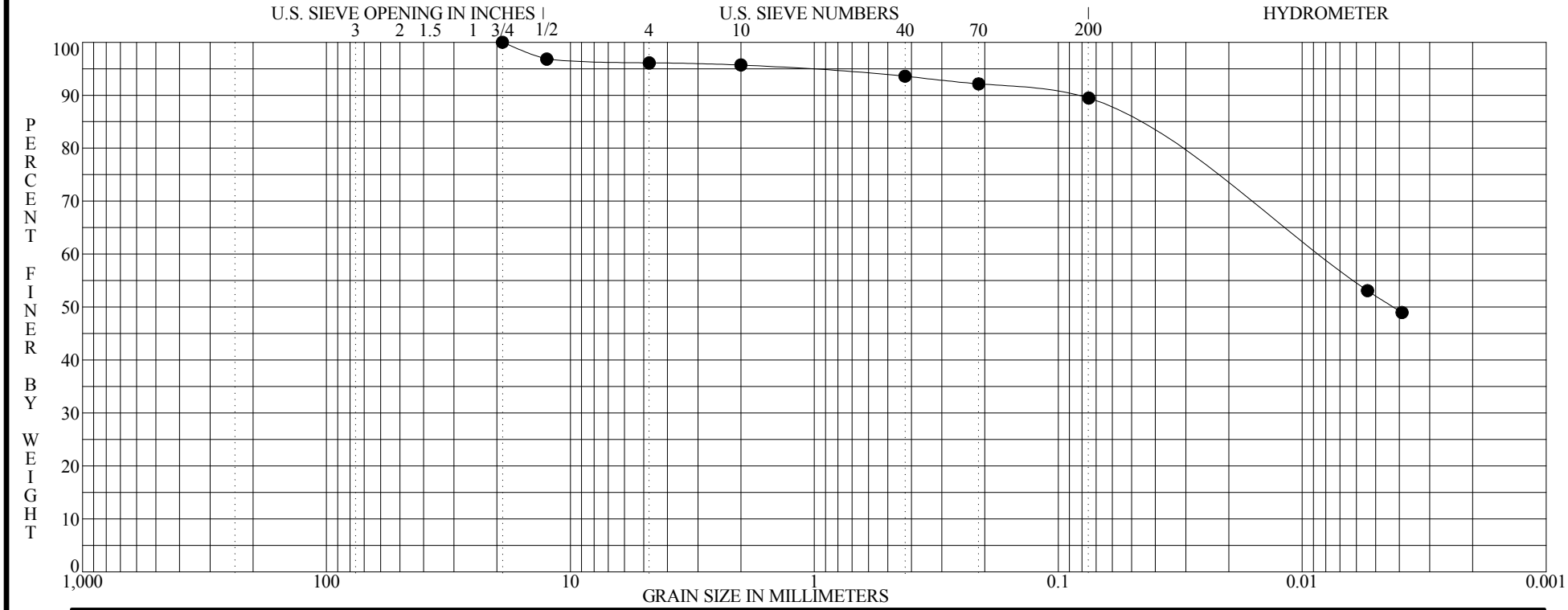

BOULDERS	COBBLES	GRAVEL		SAND			SILT OR CLAY
		coarse	fine	coarse	medium	fine	

	Specimen Identification - Depth	Classification	MC%	LL	PL	PI	Cc	Cu
●	**B-214 S-1 1.0' to 2.4'**	**Dark-brown mottled with dark-gray silty clay, trace fine to coarse sand, trace fine gravel.**	**21**	**56**	**24**	**32**		

	Specimen Identification - Depth	D100	D95	D60	D50	D10	%Gravel	%Sand	%Silt	%Clay
●	**B-214 S-1 1.0' to 2.4'**	**19.0000**	**1.1885**	**0.0089**	**0.0042**		**3.9**	**6.6**	**37.3**	**52.1**

ASTM D422

GRADATION CURVE

PROJECT: SR161/RIVERSIDE DRIVE IMPROVEMENTS
LOCATION: DUBLIN, OHIO
JOB NO.: 1171-13-042A
DATE: 10/14/13

GRN-REG

PLATE 40

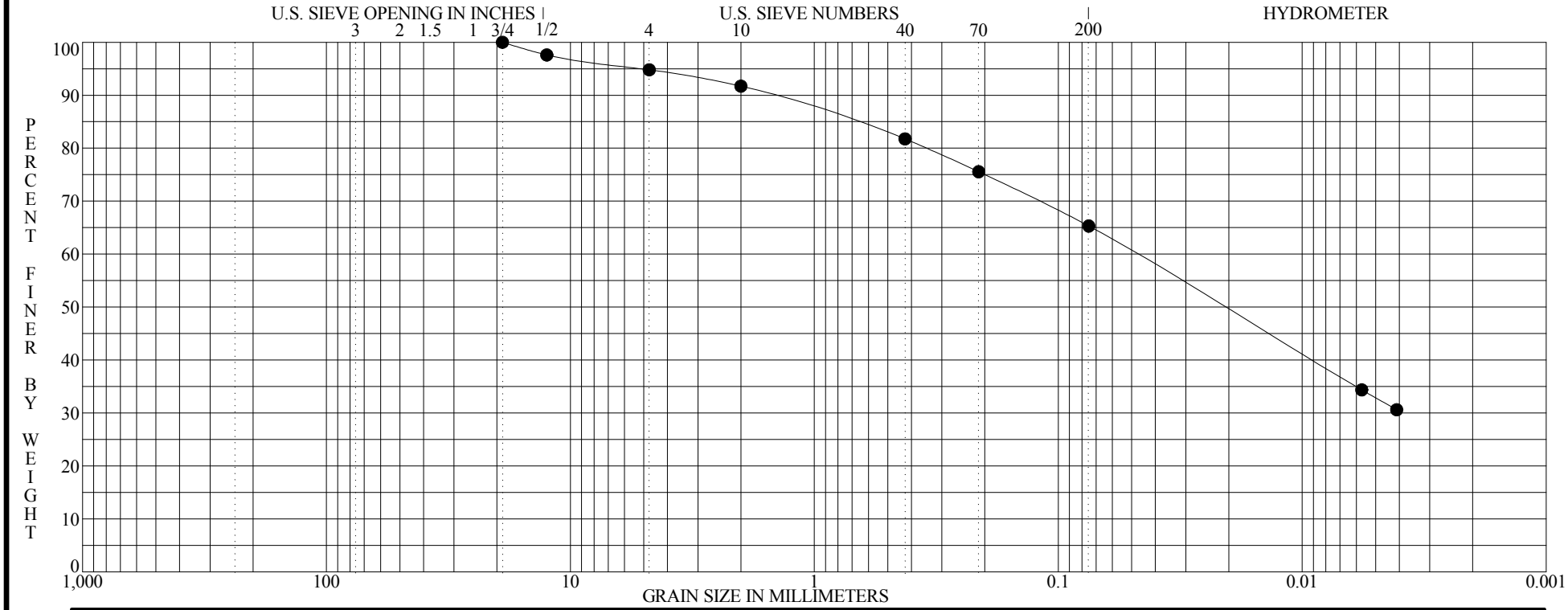

BOULDERS	COBBLES	GRAVEL		SAND			SILT OR CLAY
		coarse	fine	coarse	medium	fine	

	Specimen Identification - Depth	Classification	MC%	LL	PL	PI	Cc	Cu
●	**B-215 S-1 1.0' to 2.0'**	**Brown mottled with gray silty clay, some fine to coarse sand, trace fine gravel.**	**20**	**31**	**18**	**13**		

	Specimen Identification - Depth	D100	D95	D60	D50	D10	%Gravel	%Sand	%Silt	%Clay
●	**B-215 S-1 1.0' to 2.0'**	**19.0000**	**5.0911**	**0.0482**	**0.0210**		**5.2**	**29.5**	**32.4**	**32.9**

ASTM D422

GRADATION CURVE

PROJECT SR161/RIVERSIDE DRIVE IMPROVEMENTS
LOCATION DUBLIN, OHIO
JOB NO. 1171-13-042A **DATE** 10/14/13

GRN-REG

PLATE 41

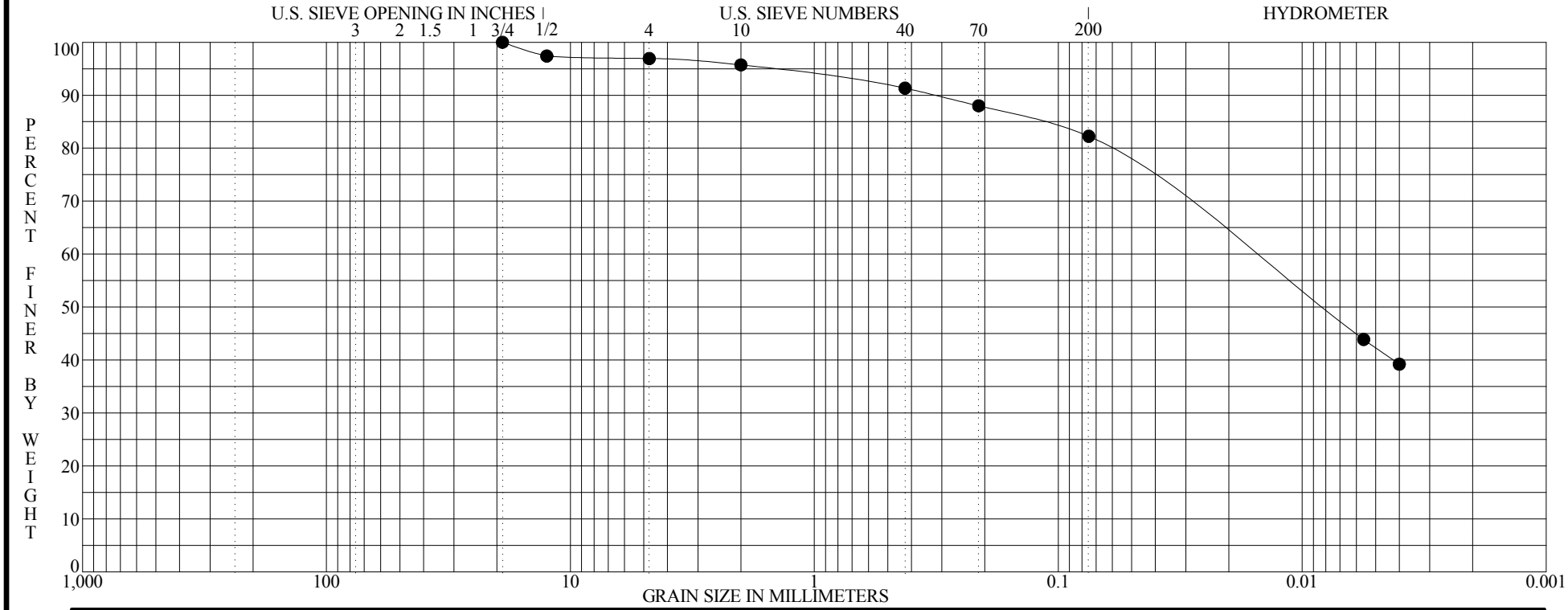

BOULDERS	COBBLES	GRAVEL		SAND			SILT OR CLAY
		coarse	fine	coarse	medium	fine	

	Specimen Identification - Depth	Classification	MC%	LL	PL	PI	Cc	Cu
●	**B-216 S-1 1.0' to 2.0'**	**Dark-gray silty clay, little fine to coarse sand, trace fine gravel.**	**19**	**50**	**24**	**26**		

	Specimen Identification - Depth	D100	D95	D60	D50	D10	%Gravel	%Sand	%Silt	%Clay
●	**B-216 S-1 1.0' to 2.0'**	**19.0000**	**1.5488**	**0.0166**	**0.0085**		**3.1**	**14.7**	**39.9**	**42.3**

ASTM D422

GRADATION CURVE

PROJECT SR161/RIVERSIDE DRIVE IMPROVEMENTS
LOCATION DUBLIN, OHIO
JOB NO. 1171-13-042A **DATE** 10/14/13

GRN-REG

PLATE 42

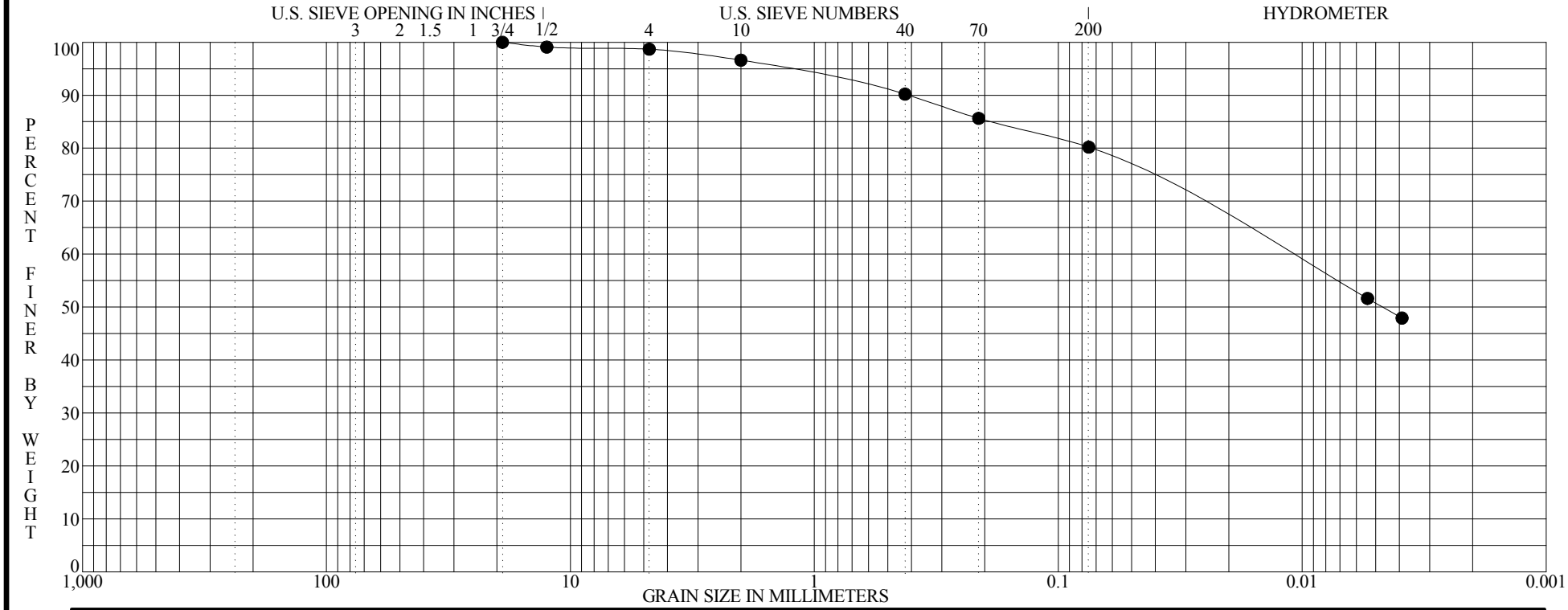

BOULDERS	COBBLES	GRAVEL		SAND			SILT OR CLAY
		coarse	fine	coarse	medium	fine	

	Specimen Identification - Depth	Classification	MC%	LL	PL	PI	Cc	Cu
●	**B-217 S-1A 2.5' to 3.0'**	**Brown silty clay, little fine to coarse sand, trace fine gravel.**	**28**	**54**	**23**	**31**		

	Specimen Identification - Depth	D100	D95	D60	D50	D10	%Gravel	%Sand	%Silt	%Clay
●	**B-217 S-1A 2.5' to 3.0'**	**19.0000**	**1.3527**	**0.0117**	**0.0047**		**1.3**	**18.5**	**29.4**	**50.8**

ASTM D422

GRADATION CURVE

PROJECT SR161/RIVERSIDE DRIVE IMPROVEMENTS
LOCATION DUBLIN, OHIO
JOB NO. 1171-13-042A **DATE** 10/14/13

GRN-REG

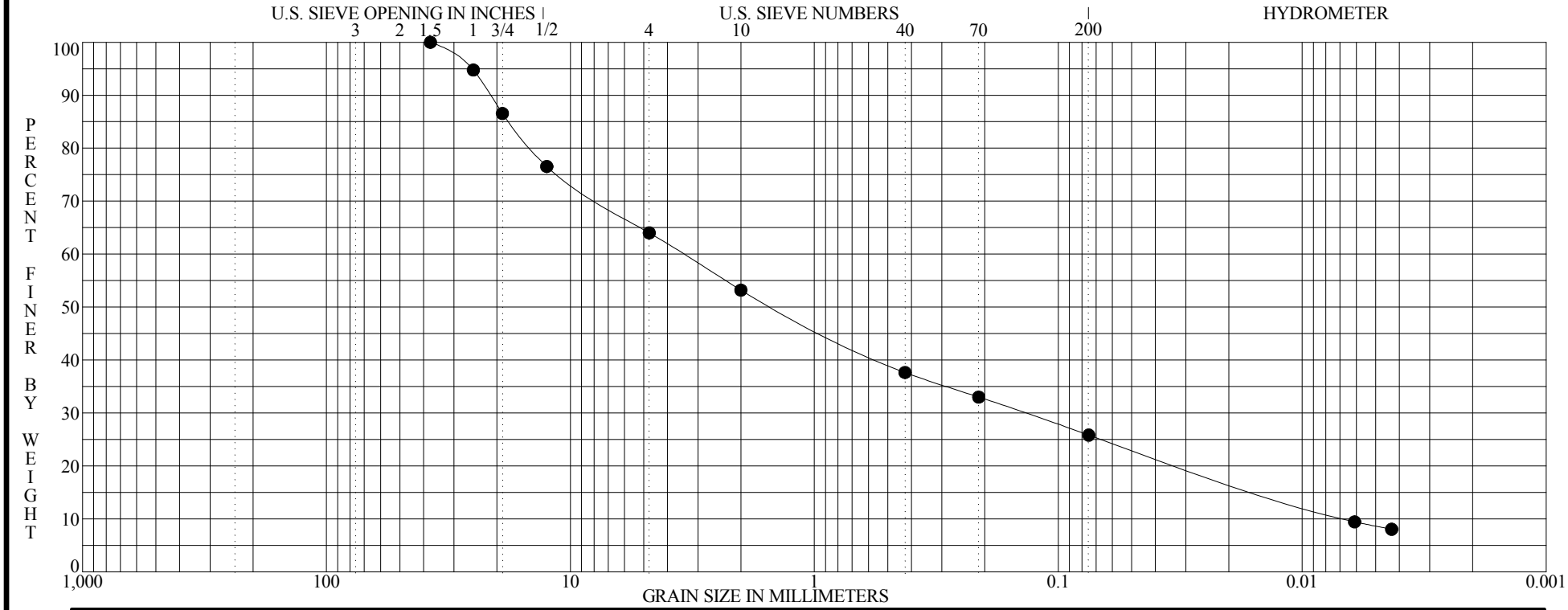

BOULDERS	COBBLES	GRAVEL		SAND			SILT OR CLAY
		coarse	fine	coarse	medium	fine	

	Specimen Identification - Depth	Classification	MC%	LL	PL	PI	Cc	Cu
●	**B-218 S-1 1.5' to 3.0'**	**Gray and dark-brown fine to coarse sand, "and" fine to coarse gravel, little silt, trace clay.**	**9**	**21**	**17**	**4**	**0.822**	**518.567**

	Specimen Identification - Depth	D100	D95	D60	D50	D10	%Gravel	%Sand	%Silt	%Clay
●	**B-218 S-1 1.5' to 3.0'**	**37.5000**	**25.4593**	**3.4475**	**1.4544**	**0.0066**	**36.0**	**38.2**	**17.2**	**8.6**

ASTM D422

GRADATION CURVE

PROJECT SR161/RIVERSIDE DRIVE IMPROVEMENTS
LOCATION DUBLIN, OHIO
JOB NO. 1171-13-042A **DATE** 10/14/13

GRN-REG

PLATE 44

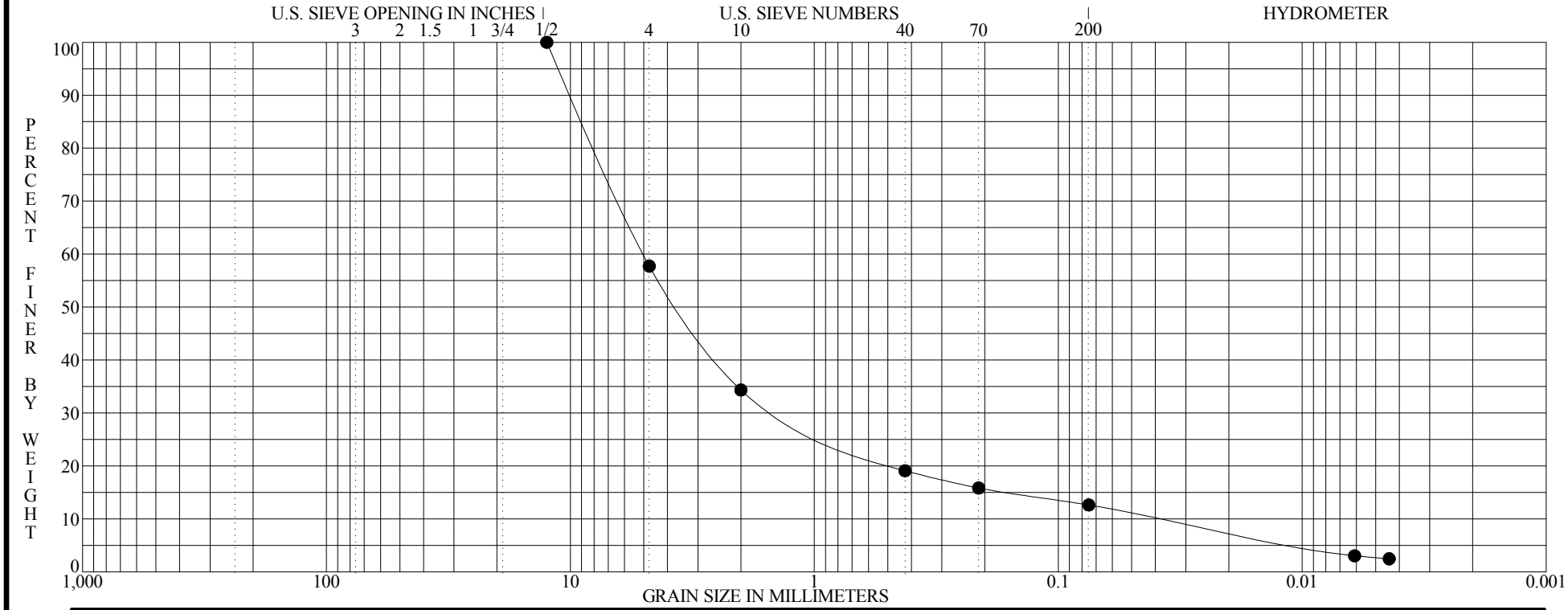

BOULDERS	COBBLES	GRAVEL		SAND			SILT OR CLAY
		coarse	fine	coarse	medium	fine	

	Specimen Identification - Depth	Classification	MC%	LL	PL	PI	Cc	Cu
●	**B-220 S-2 3.5' to 5.0'**	**FILL: Gray fine to coarse sand, "and" fine to coarse gravel, trace silt, trace clay.**	**5**	**NP**	**NP**	**NP**	**8.786**	**132.560**

	Specimen Identification - Depth	D100	D95	D60	D50	D10	%Gravel	%Sand	%Silt	%Clay
●	**B-220 S-2 3.5' to 5.0'**	**12.5000**	**11.1480**	**5.0027**	**3.5688**	**0.0377**	**42.3**	**45.1**	**9.9**	**2.7**

ASTM D422

GRADATION CURVE

PROJECT SR161/RIVERSIDE DRIVE IMPROVEMENTS
LOCATION DUBLIN, OHIO
JOB NO. 1171-13-042A **DATE** 10/14/13

GRN-REG

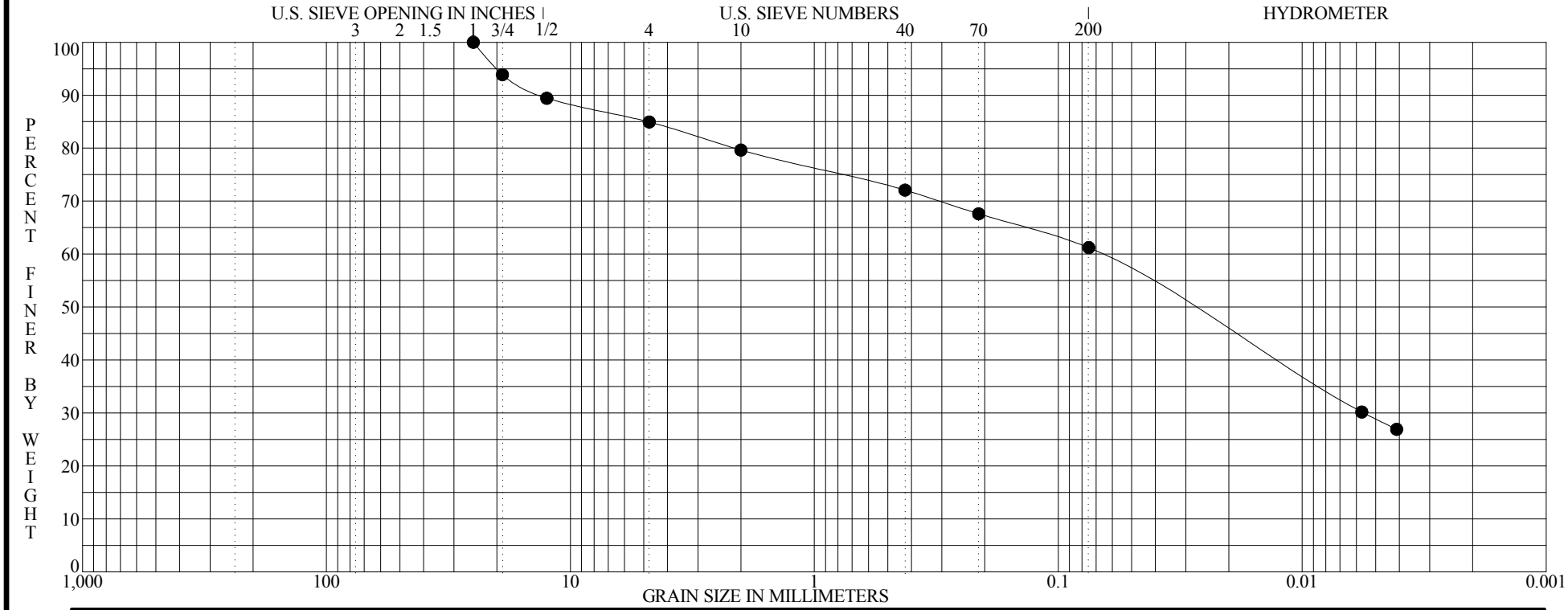

BOULDERS	COBBLES	GRAVEL		SAND			SILT OR CLAY
		coarse	fine	coarse	medium	fine	

	Specimen Identification - Depth	Classification	MC%	LL	PL	PI	Cc	Cu
●	**B-221 S-1 1.0' to 2.0'**	**FILL: Dark-brown and gray silty clay, little fine to coarse sand, little fine to coarse gravel.**	**17**	**37**	**18**	**19**		

	Specimen Identification - Depth	D100	D95	D60	D50	D10	%Gravel	%Sand	%Silt	%Clay
●	**B-221 S-1 1.0' to 2.0'**	**25.0000**	**19.9809**	**0.0677**	**0.0295**		**15.1**	**23.7**	**32.3**	**28.9**

ASTM D422

GRADATION CURVE

PROJECT: SR161/RIVERSIDE DRIVE IMPROVEMENTS
LOCATION: DUBLIN, OHIO
JOB NO.: 1171-13-042A
DATE: 10/14/13

GRN-REG

PLATE 46

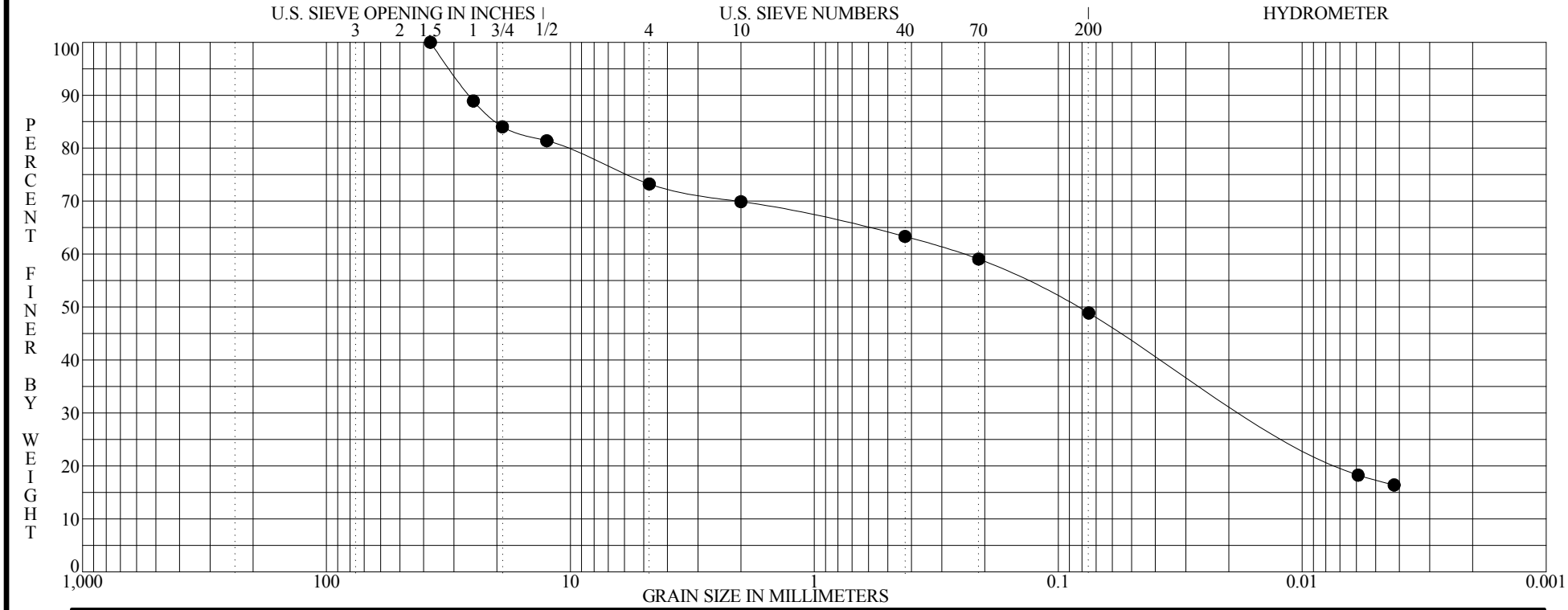

BOULDERS	COBBLES	GRAVEL		SAND			SILT OR CLAY
		coarse	fine	coarse	medium	fine	

	Specimen Identification - Depth	Classification	MC%	LL	PL	PI	Cc	Cu
●	**B-222 S-2 3.5' to 5.0'**	**Brown fine to coarse gravel, some fine to coasre sand, "and" clayey silt.**	**21**	**32**	**22**	**10**		

	Specimen Identification - Depth	D100	D95	D60	D50	D10	%Gravel	%Sand	%Silt	%Clay
●	**B-222 S-2 3.5' to 5.0'**	**37.5000**	**31.2332**	**0.2469**	**0.0840**		**26.8**	**24.4**	**31.5**	**17.4**

ASTM D422

GRADATION CURVE

PROJECT SR161/RIVERSIDE DRIVE IMPROVEMENTS
LOCATION DUBLIN, OHIO
JOB NO. 1171-13-042A **DATE** 10/14/13

GRN-REG

UNCONFINED COMPRESSION TEST

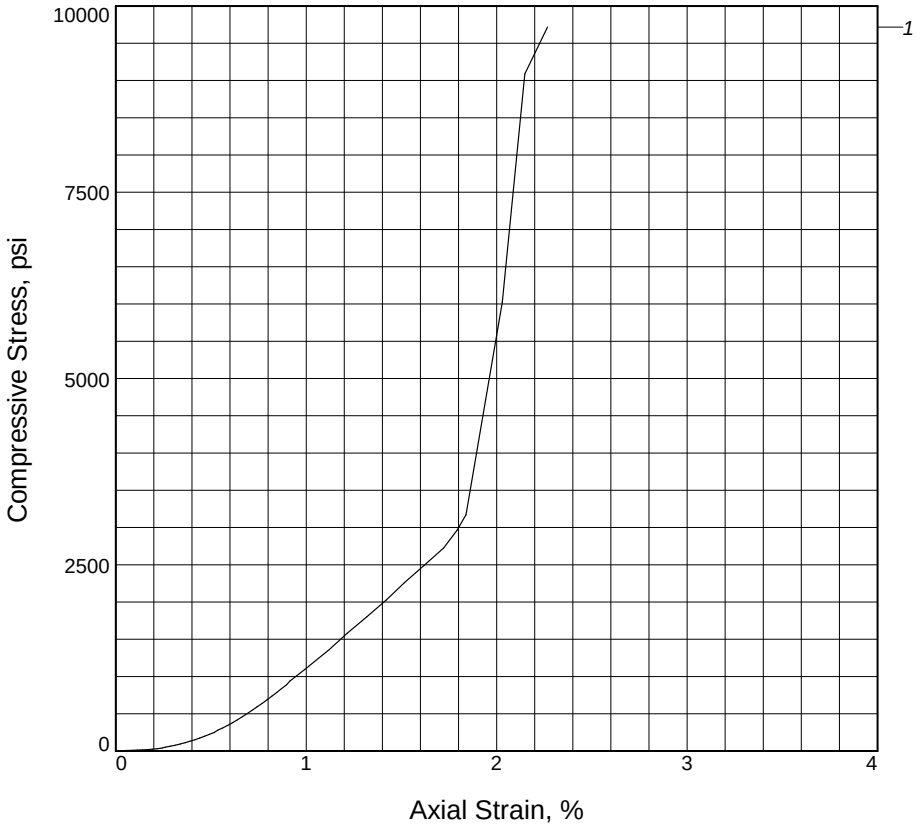

Sample No.	1			
Unconfined strength, psi	9717.12			
Undrained shear strength, psi	4858.56			
Failure strain, %	2.3			
Strain rate, in./min.	1.32			
Water content, %	1.0			
Wet density, pcf	156.0			
Dry density, pcf	154.4			
Saturation, %	29.9			
Void ratio	0.0917			
Specimen diameter, in.	1.99			
Specimen height, in.	4.20			
Height/diameter ratio	2.12			

Description: LIMESTONE, gray, hard

LL =	**PL =**	**PI =**	**GS=** 2.7	**Type:** Rock Core

Project No.: 1171-13-042A

Date Sampled: 9/19/2013

Remarks:

Client:

Project: SR 161 / Riverside Drive Improvements Dublin, Ohio

Location: B-222

Sample Number: S-6 **Depth:** 9.6' to 10.0'

UNCONFINED COMPRESSION TEST
S&ME, Inc.
Dublin, Ohio

Tested By: PJM/CBP **Checked By:** JJ

UNCONFINED COMPRESSION TEST

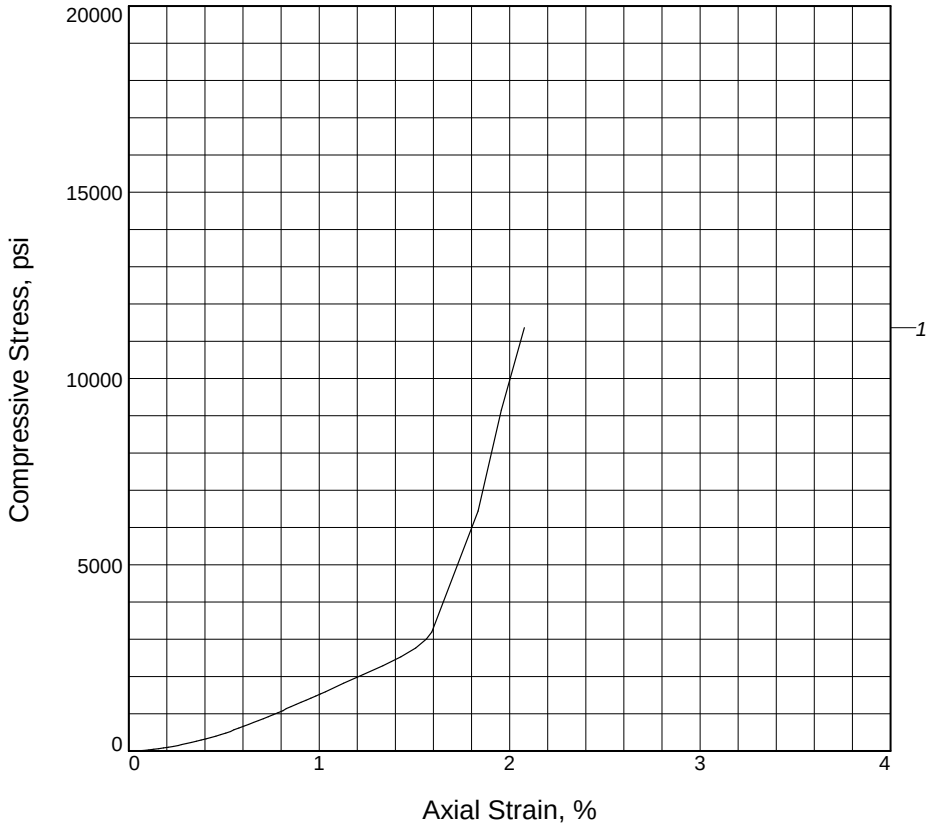

Sample No.	1			
Unconfined strength, psi	11364.81			
Undrained shear strength, psi	5682.41			
Failure strain, %	2.1			
Strain rate, in./min.	2.76			
Water content, %	0.5			
Wet density, pcf	164.2			
Dry density, pcf	163.4			
Saturation, %	42.5			
Void ratio	0.0316			
Specimen diameter, in.	1.98			
Specimen height, in.	4.12			
Height/diameter ratio	2.07			

Description: LIMESTONE, gray-brown, hard

LL =	**PL =**	**PI =**	**GS=** 2.7	**Type:** Rock Core

Project No.: 1171-13-042A

Date Sampled: 9/19/2013

Remarks:

Client:

Project: SR 161 / Riverside Drive Improvements Dublin, Ohio

Location: B-222

Sample Number: S-7 **Depth:** 15.6' to 16.1'

UNCONFINED COMPRESSION TEST
S&ME, Inc.
Dublin, Ohio

Tested By: PJM/CBP **Checked By:** JJ

UNCONFINED COMPRESSION TEST

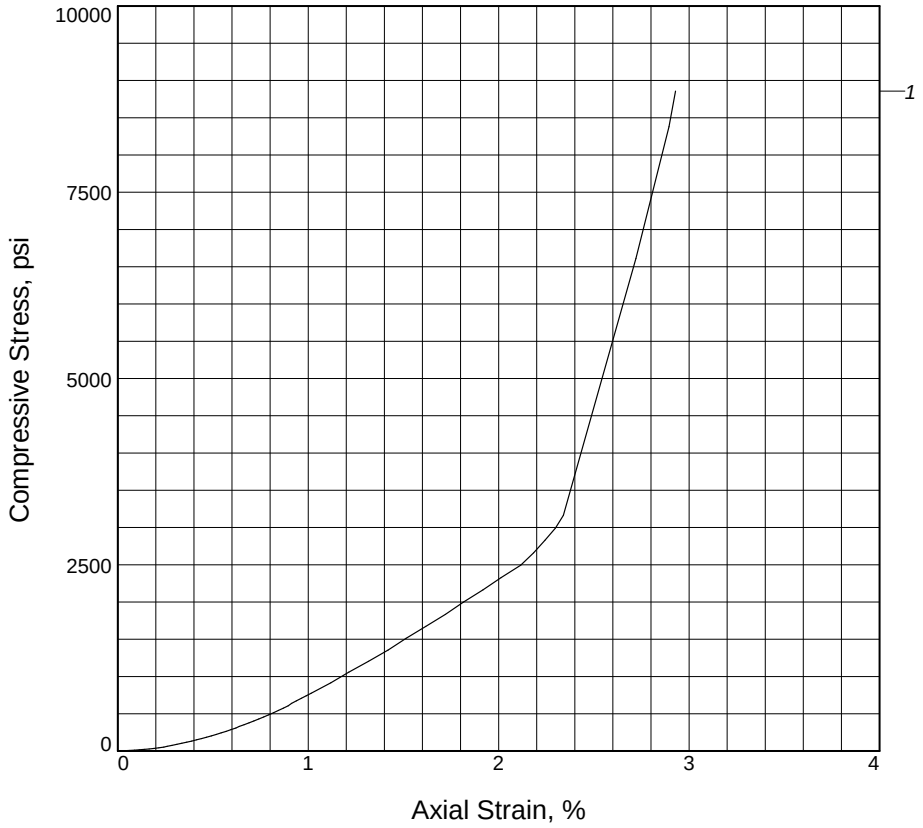

Sample No.	1			
Unconfined strength, psi	8858.41			
Undrained shear strength, psi	4429.20			
Failure strain, %	2.9			
Strain rate, in./min.	4.86			
Water content, %	0.4			
Wet density, pcf	161.8			
Dry density, pcf	161.2			
Saturation, %	24.1			
Void ratio	0.0459			
Specimen diameter, in.	1.97			
Specimen height, in.	2.88			
Height/diameter ratio	1.46			

Description: LIMESTONE, gray-brown, hard

LL =	**PL =**	**PI =**	**GS=** 2.7	**Type:** Rock Core

Project No.: 1171-13-042A

Date Sampled: 9/19/2013

Remarks:
The length-to-diameter ratio (L/D) was less than 2.0 as required by ASTM D7012. Therefore, a strength correction factor of 0.95 should be applied, which results in Qu = 8415.5 psi.

Client:

Project: SR 161 / Riverside Drive Improvements Dublin, Ohio

Location: B-223
Sample Number: S-5 **Depth:** 12.3' to 12.6'

UNCONFINED COMPRESSION TEST
S&ME, Inc.
Dublin, Ohio

Tested By: PJM/CBP **Checked By:** JJ

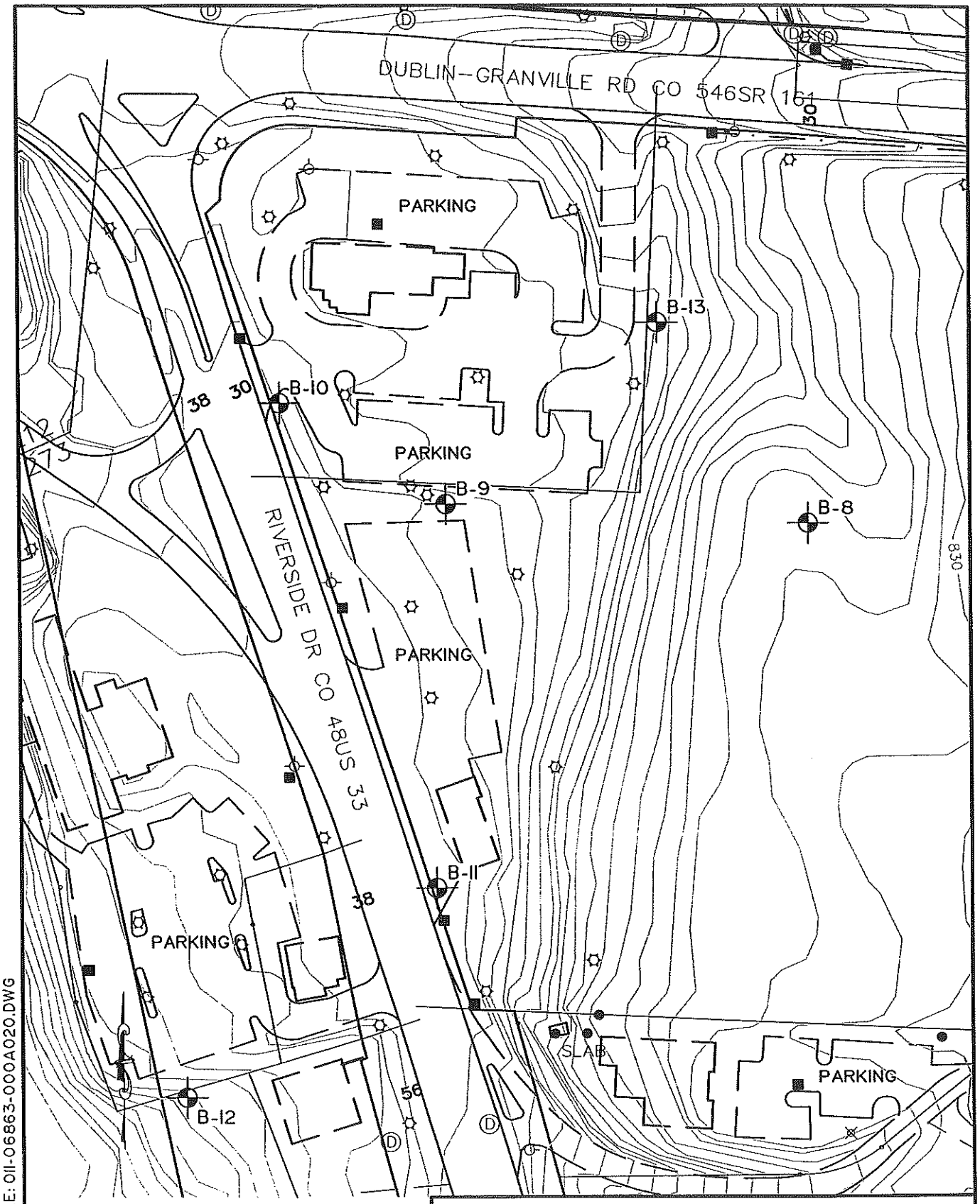

BBC&M DRAWING FILE: 01I-06863-000A020.DWG

LEGEND

B-1 BORING NUMBER AND LOCATION

PLAN OF BORINGS

WENDYS/RIVERSIDE DRIVE IMPROVEMENTS
STORMWATER IMPROVEMENT PROJECTS
DUBLIN, OHIO

Project: 01-06863-000	Drawn By: B.L.R.
Drawing Date: 3/30/00	Approved By: M.G.R.
Revision Date:	Scale: 1" = 100'

BBC&M

Columbus (614) 793-2226
Cleveland (440) 585-9995
Cincinnati (513) 771-8471

BBC&M ENGINEERING, INC.

LOG OF BORING NO. B-10
DUBLIN STORM WATER IMPROVEMENTS
WENDY'S / RIVERSIDE DRIVE IMPROVEMENTS

LOCATION: See Plate 2D
ELEVATION: 794.2
DATE: 2/23/00
DRILLING METHOD: 4-1/2" O.D. Continuous-flight Auger
COMPLETION DEPTH: 10.0'
SAMPLER(S): 2" O.D. Split-barrel Sampler; NX Rock Core Barrel

DEPTH, FEET	SAMPLE NUMBER	SAMPLE	SAMPLE EFFORT	DESCRIPTION	NATURAL CONSISTENCY INDEX / NATURAL MOISTURE CONTENT / PLASTIC LIMIT / LIQUID LIMIT (10 20 30 40)	TEST RESULTS
0				TOPSOIL - 4 INCHES		
	1		3/11/6	POSSIBLE FILL: Very-stiff to hard brown becoming dark-brown silty clay, little fine to coarse sand, trace fine to coarse gravel, slightly organic.		H=3.0-4.0
	2		3/3/4			H=3.0-4.1
5	3		NX REC 93% RQD 0%	Medium-hard light-gray and light-brown limestone, nearly horizontally bedded, many diagonal fractures, few solution cavities, contains fossils.		
10						
15				- Encountered auger refusal at 5.0'.		
20						
25						

WATER LEVEL: "Dry"
WATER NOTE: Before Coring
DATE: 2/23/00

SYMBOLS USED TO INDICATE TEST RESULTS
G - GRADATION
Q - UNCONFINED COMPR
T - TRIAXIAL COMPR
C - CONSOLIDATION
SEE SEPARATE CURVES
H - PENETROMETER (tsf)
W - UNIT DRY WEIGHT (pcf)
D - RELATIVE DENSITY (%)

BORLJ 16863000.GPJ BBC&M.GDT 4/5/00

JOB: 01106863.000

BBC&M ENGINEERING, INC.

LOG OF BORING NO. B-11
DUBLIN STORM WATER IMPROVEMENTS
WENDY'S / RIVERSIDE DRIVE IMPROVEMENTS

LOCATION: See Plate 2D
ELEVATION: 793.0
DATE: 2/23/00
DRILLING METHOD: 4-1/2" O.D. Continuous-flight Auger
COMPLETION DEPTH: 10.0'
SAMPLER(S): 2" O.D. Split-barrel Sampler; NX Rock Core Barrel

DEPTH, FEET	SAMPLE NUMBER	SAMPLE	SAMPLE EFFORT	DESCRIPTION	NATURAL CONSISTENCY INDEX (NATURAL MOISTURE CONTENT; PLASTIC LIMIT – LIQUID LIMIT; 10 20 30 40)	TEST RESULTS
0				ASPHALT - 3 INCHES		
				FILL: Loose light-gray and light-brown fine to coarse gravel, "and" fine to coarse sand, trace silt.		
	1	■	3/3/5			
	2	■	6/4/3			
5						
	3	■	3/50-4"R			
				Medium-hard light-gray and light-brown limestone, nearly horizontally bedded, many diagonal and vertical fractures, few solution cavities.		
	4	■	NX REC 100% RQD 0%			
10						
15				- Spoon refusal at 6.3'.		
				- Auger refusal at 8.5'.		
20						
25						

WATER LEVEL: ▽ "Dry" ▼ ▼
WATER NOTE: Before Coring
DATE: 2/23/00

SYMBOLS USED TO INDICATE TEST RESULTS
G - GRADATION
Q - UNCONFINED COMPR
T - TRIAXIAL COMPR
C - CONSOLIDATION
SEE SEPARATE CURVES
H - PENETROMETER (tsf)
W - UNIT DRY WEIGHT (pcf)
D - RELATIVE DENSITY (%)

BORLJ 16863000.GPJ CM.GDT 4/5/00

JOB: 01106863.000

METRIC

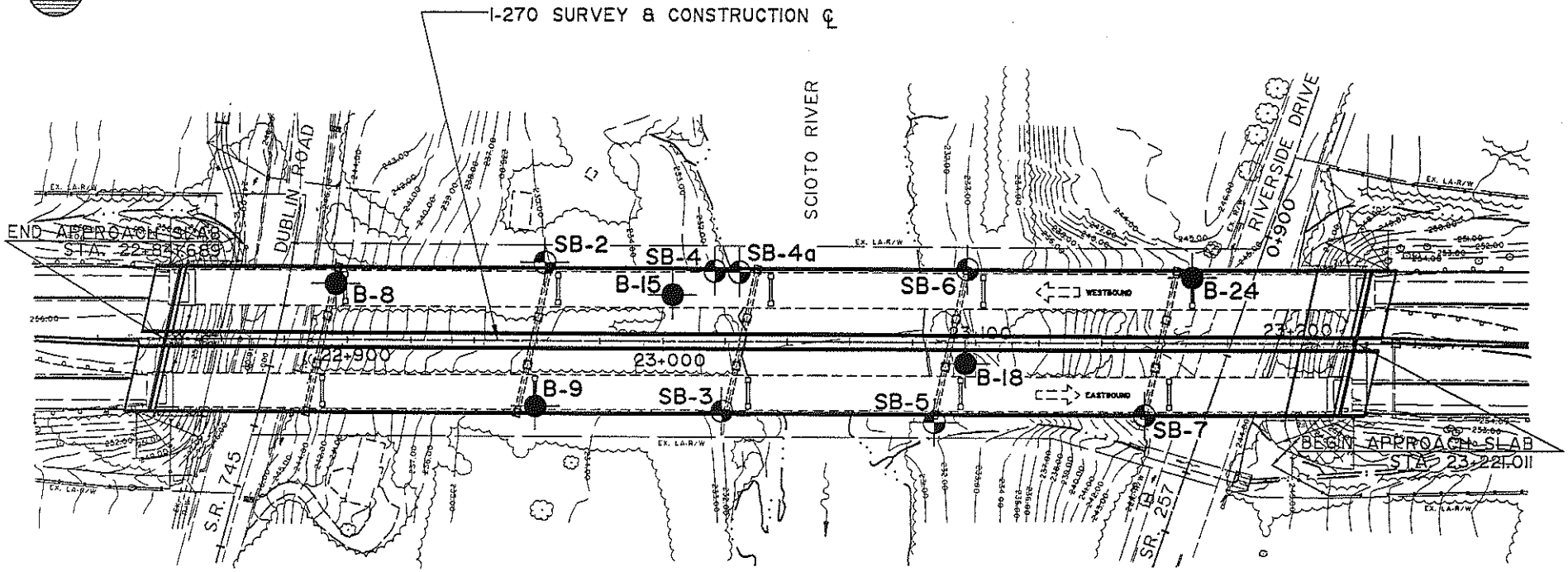

LEGEND

SB-2 — BORING LOCATION AND NUMBER

B-8 — BORING PREVIOUSLY PREFORMED BY OTHERS

PLAN OF BORINGS

REPLACEMENT STRUCTURE
No. FRA-270-22842
FRANKLIN COUNTY, OHIO

BBC&M
6190 Enterprise Court
Dublin, Ohio 43016-7297
Phone (614) 793-2226

Drawing No: 5889A020.DWG		
Drawn By: S.P.S.	Approved By: R.S.W.	
Date: 08/13/97	Revision:	Scale: 1 : 2000

PLATE 54

BBC&M ENGINEERING, INC.

LOG OF BORING NO. SB-7
REPLACEMENT STRUCTURE NO. FRA-270-22842
FRANKLIN COUNTY, OHIO

TYPE: 83mm I.D. Hollow-stem Auger; NX Rock Core Barrel

LOCATION: STA 23+153.58, 23.63m Rt. of Centerline

COMPLETION DEPTH: 7.38m ELEVATION: 243.91 DATE: 7/8/97

DEPTH, METERS	SAMPLE NO.	SAMPLES	SAMPLING EFFORT	HAND PENE-TROMETER (kPa)	MOISTURE CONTENT (%)	LIQUID LIMIT (%)	PLASTIC LIMIT (%)	AGG.	C.S.	F.S.	SILT	CLAY	DESCRIPTION
0													FILL: Brown silty clay, little fine to coarse sand, trace fine gravel. Visual
1													POSSIBLE FILL: Brown fine to coarse gravel, some fine to coarse sand, trace silt. Visual
	1		REC 97%	RQD 0%									Medium-hard to hard brown and gray limestone, nearly horizontally bedded, numerous diagonal and vertical fractures, few calcite streaks, few very small solution cavities, few clay-filled fractures, slightly fossiliferous.
2	2		REC 100%	RQD 0%									
3			REC 100%	RQD 4%									
4	3												
5													
6	4		REC 100%	RQD 78%									Medium-hard to hard brown and gray limestone, nearly horizontally bedded, few diagonal and vertical fractures, occasional clay-filled fracture.
7													
8													- No seepage noted prior to coring. - Lost ~75% water return from 5.79m to 7.01m. - Lost 100% water return at 7.01m.
9													
10													

WATER LEVEL:
WATER NOTE:
DATE:

JOB: 5889

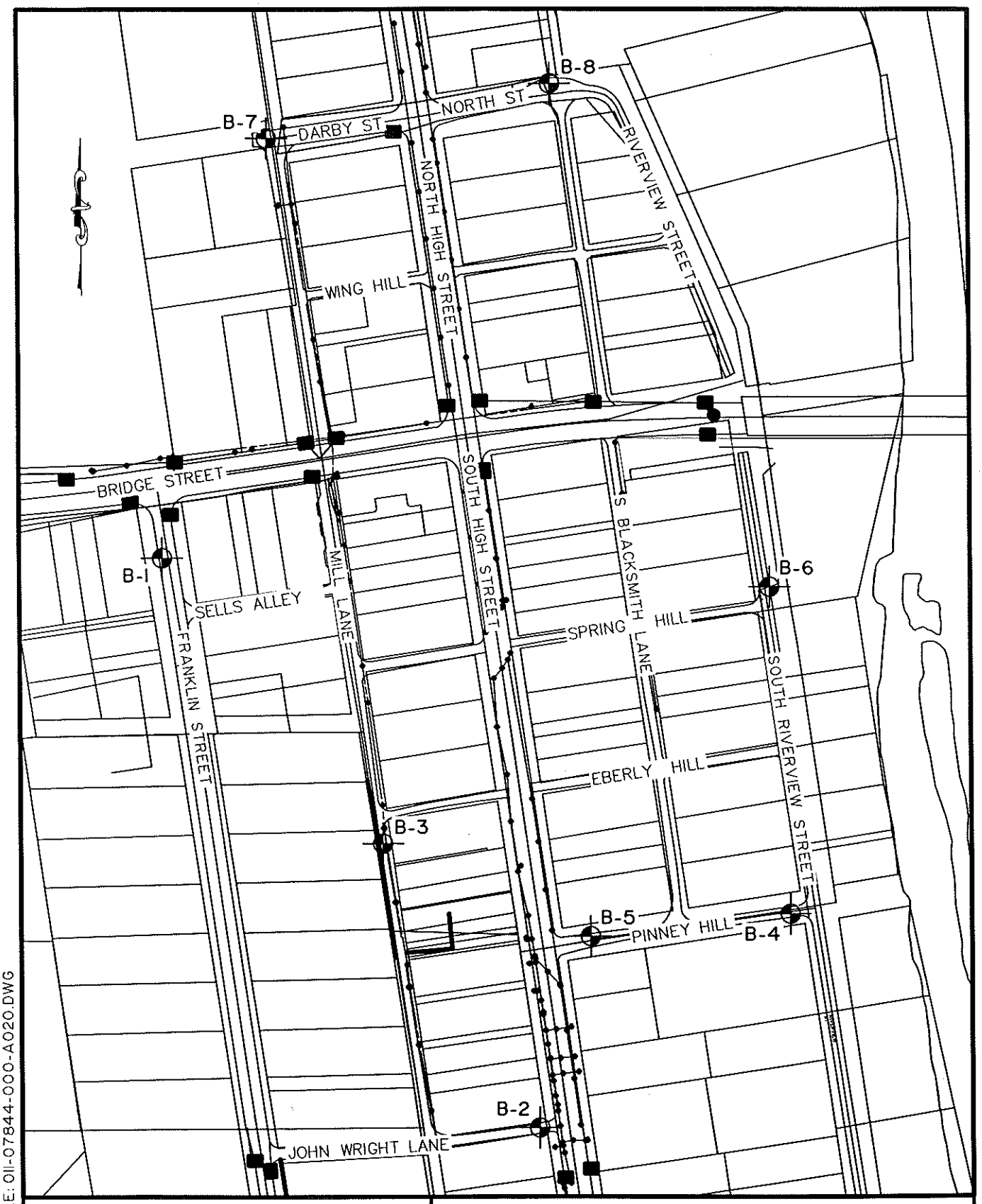

LEGEND

B-1 — BORING NUMBER AND LOCATION

VICINITY MAP

OLD DUBLIN STORMWATER SEWER STUDY
DUBLIN, OHIO

Project: 011-07844-000	Drawn By: J.L.P.
Drawing Date: 11/12/01	Approved By: S.A.H.
Revision Date:	Scale: 1" = 200'

BBC&M
Columbus (614) 793-2226
Cleveland (440) 585-9995
Cincinnati (513) 771-8471

BBC&M DRAWING FILE: 011-07844-000-A020.DWG

BBC&M ENGINEERING, INC.

LOG OF BORING NO. B-8
OLD DUBLIN STORMWATER SEWER STUDY
DUBLIN, OH

LOCATION: See Plate 2 ELEVATION: 808.5+/- DATE: 11/1/01

DRILLING METHOD: 3-1/4" I.D. Hollow-stem Auger COMPLETION DEPTH: 7.5'

SAMPLER(S): NX Rock Core Barrel

DEPTH, FEET	SAMPLE NUMBER	SAMPLE	SAMPLE EFFORT	DESCRIPTION	NATURAL CONSISTENCY INDEX / NATURAL MOISTURE CONTENT / PLASTIC LIMIT / LIQUID LIMIT (10 20 30 40)	TEST RESULTS
0				ASPHALT - 6 INCHES		
				GRANULAR BASE - 12 INCHES		
				Stiff to very-stiff (est.) brown silty clay, little fine to coarse sand, trace fine to coarse gravel (based on cuttings).		
				Apparent weathered limestone (highly fractured).		
5	1		REC 64% RQD 15%	Medium-hard light-gray limestone, nearly horizontally bedded, many horizontal and vertical fractures, contains calcite crystals (core pieces broke along solution filled fractures).		
10						
15				- Encountered auger refusal at 4.5'. - No seepage or groundwater encountered prior to coring.		
20						
25						

WATER LEVEL: ▽ ▼ ▼
WATER NOTE:
DATE:

SYMBOLS USED TO INDICATE TEST RESULTS

G - GRADATION
Q - UNCONFINED COMPR
T - TRIAXIAL COMPR
C - CONSOLIDATION
} SEE SEPARATE CURVES

H - PENETROMETER (tsf)
W - UNIT DRY WEIGHT (pcf)
D - RELATIVE DENSITY (%)

BORLJ 17844000.GP. 4.GDT 11/12/01

JOB: 01107844.000

Images: ~ Riverside Dr. Site Aerial 2009 Auditor.jp2 ~ TOPO!map.JPG
Xrefs:
File Last Updated: Jun 25, 2013
Plot Info: 6-25-2013 @ 4:40pm By: dverhulst
S&ME Filename: I:\DEPTS\cadd\Drawings\BST Projects\1171-Geotechnical\1171-13-042\1171-13-042C\PLANS\Site Topo from OSIP.dwg Layout: 8.5x11L

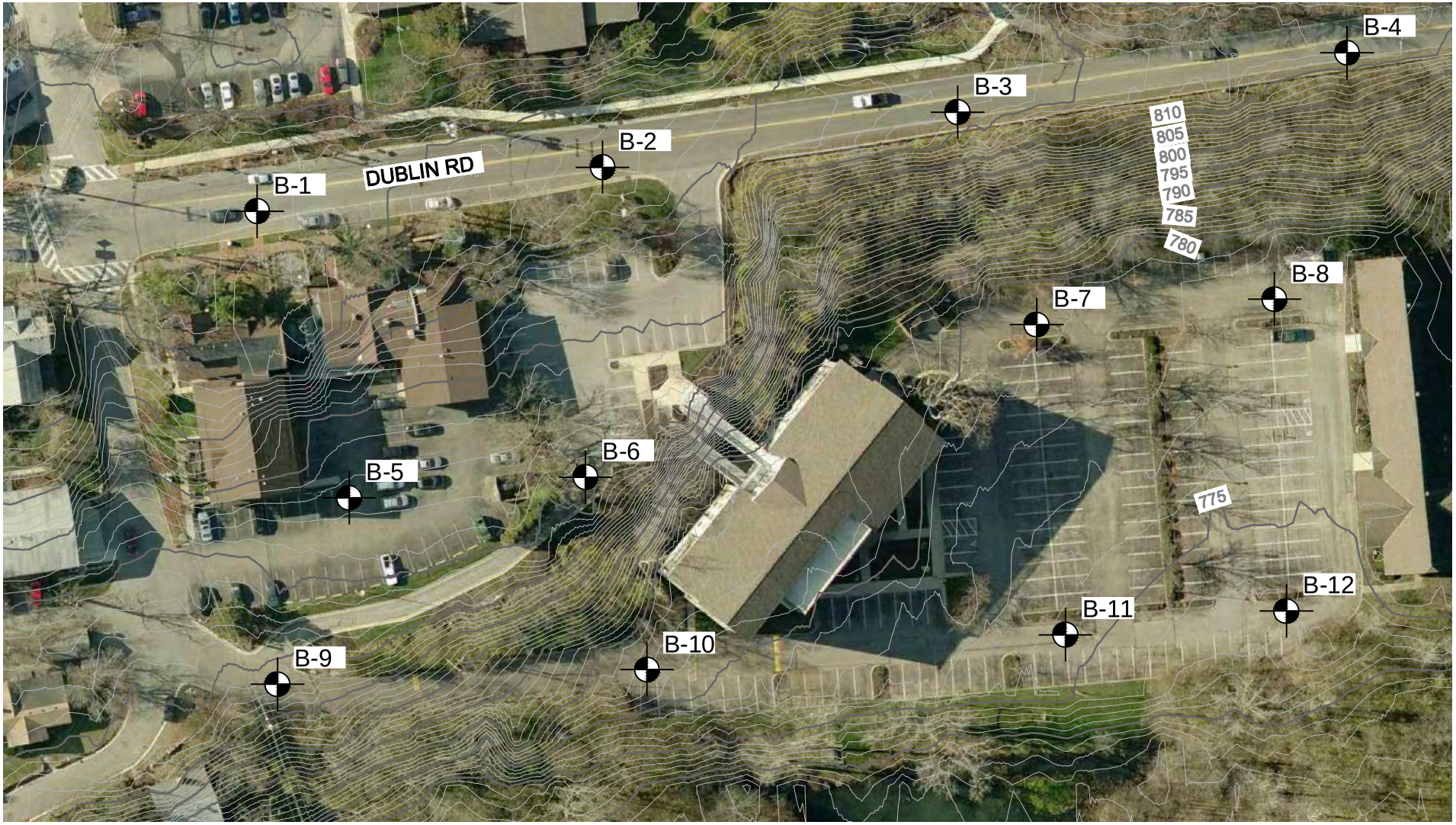

0 80 160
SCALE INFEET

LEGEND

B-1 BORING NUMBER AND LOCATION

PLAN OF BORINGS

ROUTE 161-RIVERSIDE DRIVE
AREA IMPROVEMENTS
DUBLIN, OHIO

Project: 1171-13-042C	Drawn By: DCV	
Drawing Date: 6-25-2013	Approved By: RTE	
Last Updated: 6-25-2013	Scale: GRAPHIC	1:1

S&ME
WWW.SMEINC.COM
ENGINEERING FIRM. 03530

PLATE 58

LOG OF BORING NO. B-9
ROUTE 161 - RIVERSIDE DR. AREA IMPROVEMENTS
DUBLIN, OHIO

S&ME

LOCATION: See Plate 2A of Appendix A. ELEVATION: 802 ± DATE: 6/11/13

DRILLING METHOD: 4-1/2" O.D. Continuous-flight Auger COMPLETION DEPTH: 6.5'

SAMPLER(S): 2" O.D. Split-barrel Sampler

ELEV.	DEPTH, FEET	SAMPLE NUMBER	SAMPLE	SAMPLE EFFORT	N_{60}	SAMPLE REC-%	DESCRIPTION	NATURAL CONSISTENCY INDEX / NATURAL MOISTURE CONTENT (PLASTIC LIMIT – LIQUID LIMIT; 10 20 30 40)	TEST RESULTS
801.7	0						ASPHALT - 3 INCHES		
		1	■	6/10/20	40	47	POSSIBLE FILL: Hard brown and gray clayey silt, some fine to coarse sand, "and" fine to coarse gravel (limestone fragments).		H=4.5+
	5	2	■	4/3/2	7	80			
796.5							Hard gray highly fractured limestone.		
795.5									
	10						- No seepage encountered. - Encountered auger refusal at 6.5'. - Borings located using field pacing and taping methods and should be considered approximate. - Elevations estimated from available topomapping and should be considered approximate.		
	15								
	20								
	25								

2010 NEW DEFAULT BORING LOG-W/ N60

WATER LEVEL: "Dry"
WATER NOTE: Caved at 6.1
DATE: 6/11/2013

SYMBOLS USED TO INDICATE TEST RESULTS
G - Gradation, Q - Uncon Comp, T - Triax Comp, C - Consol. — See Separate Curves
H - Penetrometer (tsf)
W - Unit Dry Wt (pcf)
D - Relative Dens (%)

Drill Rod Energy Ratio : .808
Last Calibration Date : 08/25/11
Drill Rig Number : Truck 45B

JOB: 1171-13-042C

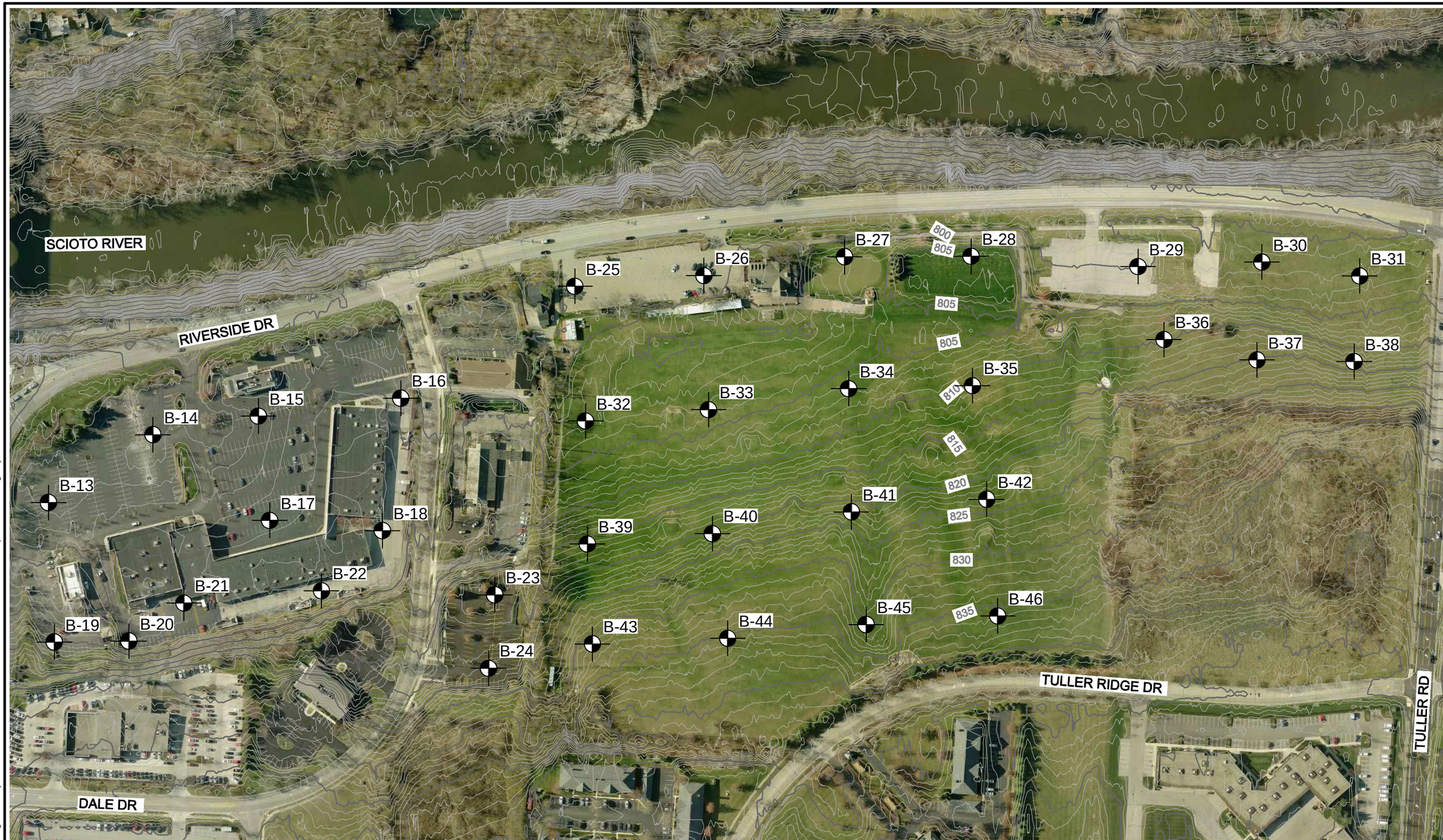

0 200 400

SCALE INFEET

LEGEND

B-13 BORING NUMBER AND LOCATION

PLAN OF BORINGS

ROUTE 161-RIVERSIDE DRIVE
AREA IMPROVEMENTS
DUBLIN, OHIO

Project: 1171-13-042C	Drawn By: DCV	
Drawing Date: 6-25-2013	Approved By: RTE	
Last Updated: 6-25-2013	Scale: GRAPHIC	1:1

S&ME
WWW.SMEINC.COM
ENGINEERING FIRM. 03530

Images: ~ Riverside Dr. Site Aerial 2009 Auditor.jp2 ~ TOPO\map.JPG
Xrefs:
File Last Updated: Jun 25, 2013
Plot Info: 6-25-2013 @ 4:44pm By: dverhulst
S&ME Filename: I:\DEPTS\cadd\Drawings\BST Projects\1171-Geotechnical\1171-13-042\1171-13-042C\PLANS\Site Topo from OSIP.dwg Layout: 11x17

LOG OF BORING NO. B-28
ROUTE 161 - RIVERSIDE DR. AREA IMPROVEMENTS
DUBLIN, OHIO

S&ME

LOCATION: See Plate 2B of Appendix A. ELEVATION: 805.9 DATE: 6/11/13

DRILLING METHOD: 4-1/2" O.D. Continuous-flight Auger COMPLETION DEPTH: 11.2'

SAMPLER(S): 2" O.D. Split-barrel Sampler

ELEV.	DEPTH, FEET	SAMPLE NUMBER	SAMPLE	SAMPLE EFFORT	N_{60}	SAMPLE REC-%	DESCRIPTION	NATURAL CONSISTENCY INDEX / NATURAL MOISTURE CONTENT (PLASTIC LIMIT – LIQUID LIMIT; 10 20 30 40)	TEST RESULTS
805.4	0						TOPSOIL - 6 INCHES		
		1		2 / 3 / 3	8	100	FILL: Stiff to hard dark-brown and gray silty clay, some fine to coarse sand, trace fine gravel and roots.		H=4.5+
	5	2		4 / 2 / 9	15	27			H=1.5
798.4							Very-stiff gray silty clay, little fine to coarse sand, trace fine gravel.		
796.4		3		4 / 5 / 50-3"R		46			H=3.0
	10						Hard gray highly fractured limestone.		
794.7							- No seepage encountered. - Encountered auger refusal at 11.2'. - Borings located using field pacing and taping methods and should be considered approximate. - Elevations estimated from available topomapping and should be considered approximate.		
	15								
	20								
	25								

WATER LEVEL: "Dry"
WATER NOTE: Caved at 9.2
DATE: 6/11/2013

SYMBOLS USED TO INDICATE TEST RESULTS

G - Gradation, Q - Uncon Comp, T - Triax Comp, C - Consol. — See Separate Curves

H - Penetrometer (tsf)
W - Unit Dry Wt (pcf)
D - Relative Dens (%)

Drill Rod Energy Ratio : .808
Last Calibration Date : 08/25/11
Drill Rig Number : Truck 45B

2010 NEW DEFAULT BORING LOG-W/ N60

JOB: 1171-13-042C

F. STANDARD DRAWINGS

GENERAL NOTES, SIDEWALK CURB RAMPS

1. CURB RAMP COMPONENTS ASSEMBLY - THE CURB RAMP INCLUDES THE RAMPS, FLARED SIDES, LANDINGS AND ROLLED EDGES.

2. CURB RAMP TYPE - CURB RAMPS SHALL BE SPECIFIED BY THE APPROPRIATE TYPE AND SHALL BE PERPENDICULAR TO THE CURB EXCEPT TYPES E & F.

   TYPE A - DIAGONAL RAMP WITH FLARES IN TREE LAWN.

   TYPE B - DIAGONAL RAMP WITH FLARES.
   TYPE C - PERPENDICULAR RAMP IN TREE LAWN.
   TYPE D - PERPENDICULAR RAMP OBSTRUCTED ON ONE SIDE (WITH PRIOR WRITTEN CITY APPROVAL ONLY)
   TYPE E - RAMP WITH RECESSED LOWER LANDING FOR ALLEYS AND DRIVEWAYS (WITH TREE LAWN).
   TYPE F - RAMP WITH RECESSED LOWER LANDING FOR ALLEYS AND DRIVEWAYS (NO TREE LAWN).
   TYPE G - PARALLEL (OFF-STREET LANDING) WITH 2 TRANSITION RAMPS (WITH PRIOR WRITTEN CITY APPROVAL ONLY).
   TYPE H - MEDIAN RAMP WITH CENTER LANDING.
   TYPE I - COMBINED PERPENDICULAR AND PARALLEL RAMP ONE DIRECTION.

3. RAMP RUNNING SLOPE - THE RAMP RUNNING SLOPE SHALL BE 5% (1:20) TO 7.7% (1:13).

4. RAMP CROSS SLOPE - THE MAXIMUM CROSS SLOPE SHALL BE 1.56% (1:64, 3/16 INCH PER FOOT).

5. PERPENDICULAR RAMP WIDTH - THE MINIMUM WIDTH OF A SIDEWALK RAMP SHALL BE 4-FEET AND OF A BIKE PATH RAMP SHALL BE 8-FEET. THE WIDTH MAY BE REDUCED TO A MINIMUM OF 3-FEET WITH PRIOR WRITTEN CITY APPROVAL IF CLEARANCE RESTRICTIONS EXIST.

6. PARALLEL RAMP WIDTH - TYPE H RAMP SHALL BE A MINIMUM OF 4-FEET BY 5-FEET & 5-FEET BY 5-FEET RESPECTIVELY, PER STANDARD DRAWINGS.

7. ALL JOINTS BETWEEN NEW AND EXISTING MATERIALS SHALL BE FLUSH.

8. FLARES - THE LENGTH OF THE FLARE AT THE FACE OF CURB SHALL BE A MAXIMUM OF 10% OR 10 TIMES THE CURB HEIGHT, WHICHEVER IS LESS.

9. LANDINGS - LANDINGS SHALL BE A MINIMUM OF 4-FEET BY 4-FEET WITH A 1.56% (1:64) CROSS SLOPE FOR ALL CURB RAMP TYPES EXCEPT PARALLEL CURB RAMPS. OFF STREET LANDINGS FOR PARALLEL CURB RAMPS SHALL BE A MINIMUM OF 4-FEET BY 5-FEET AS INDICATED IN THE STANDARD DRAWINGS. LANDINGS ARE REQUIRED AS FOLLOWS:

   A. TOP LANDING - CURB RAMP TYPES A, B, C AND G SHALL HAVE LANDINGS AT THE TOP OF THE RAMP.

   B. LOWER RECESSED LANDING - CURB RAMP TYPE E AND F SHALL HAVE A RECESSED LANDING AT THE BOTTOM OF THE RAMP WHERE IT INTERSECTS THE CURB LINE.

   C. LANDING AT INTERSECTING SIDEWALKS - WHEREVER SIDEWALKS INTERSECT THERE SHALL BE A LANDING MEETING THE ABOVE REQUIREMENTS.

(GENERAL NOTES CONTINUED ON SHEET 2)

Date: 05/01/2014

City of Dublin
ENGINEERING

STANDARD DRAWING

CURB RAMP GENERAL NOTES

DRAWING NO. ***PD-02***

GENERAL NOTES, SIDEWALK CURB RAMPS (CONTINUED)

10. STREET COUNTER SLOPE - THE COUNTER SLOPE AT THE BASE OF THE RAMP SHALL BE A MAXIMUM OF 1:20 OR 5% FOR A MINIMUM OF 2-FEET.

11. MAXIMUM DIFFERENTIAL BETWEEN RAMP RUNNING SLOPE AND GUTTER PAN SHALL BE 13 %, THE PREFERRED DIFFERENTIAL IS 11%..

12. SURFACES - RAMP AND FLARE SURFACES MUST BE STABLE AND SLIP RESISTANT. RAMPS SHALL BE MEDIUM BROOMED TRANSVERSE TO THE DIRECTION OF TRAVEL. GRATINGS, VALVE BOXES, AND UTILITY BOXES SHALL NOT BE LOCATED IN THE RAMP, LANDING, OR TRANSITION AREAS.

13. DETECTABLE WARNINGS SHALL BE INSTALLED IN ACCORDANCE WITH CITY OF DUBLIN STANDARD DRAWING PD-03. DETCTABLE WARNINGS SHALL BE PROVIDED WHEREVER A CURB RAMP CROSSES A PUBLIC VEHICULAR WAY.

14. THE PEDESTRIAN WALKWAY WITHIN THE STREET PAVEMENT, AT LEAST 7-FEET WIDE, BETWEEN OPPOSING RAMPS SHALL HAVE A CROSS-SLOPE (THE LONGITUDINAL STREET SLOPE) OF NO GREATER THAN 2%. VERTICAL STREET CURVES SHALL BE INSTALLED AS NEEDED.

15. GRAVEL BEDDING SHALL HAVE A MINIMUM DEPTH OF 4 INCHES AND SHOULD NOT EXCEED A DEPTH OF 6 INCHES.

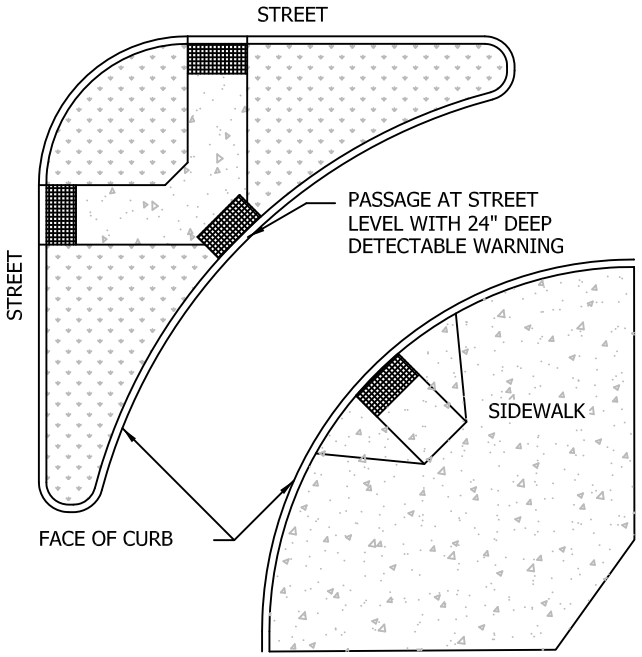

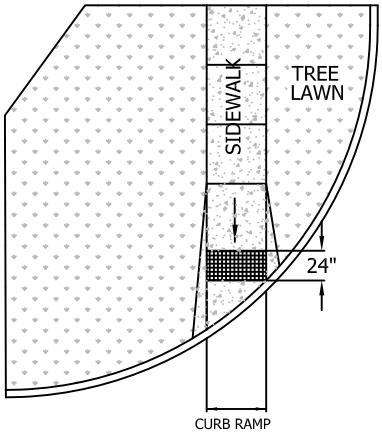

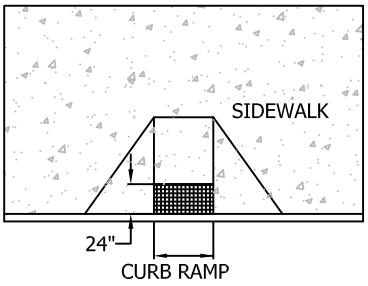

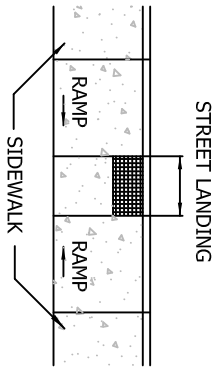

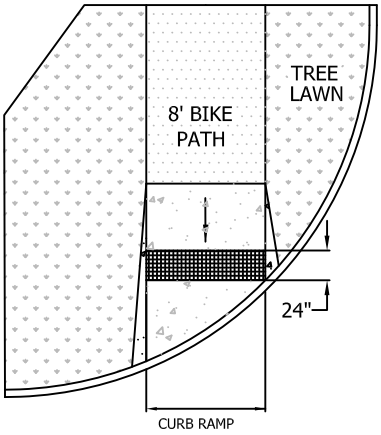

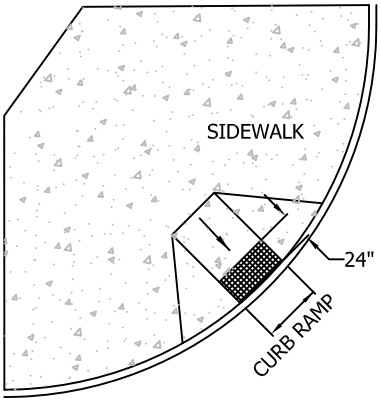

NOTES:

1. DETECTABLE WARNINGS SHALL BE PROVIDED WHEREVER A CURB RAMP CROSSES A VEHICULAR WAY EXCLUDING UNSIGNALIZED DRIVEWAY CROSSINGS.

2. DETECTABLE WARNINGS SHALL BE PROVIDED 24 INCHES IN THE DIRECTION OF TRAVEL AND EXTEND THE FULL WIDTH OF THE CURB RAMP OR FLUSH SURFACE. THE DETECTABLE WARNING SHALL BE LOCATED ADJACENT TO THE CURB LINE.

3. DETECTABLE WARNINGS SHALL BE PLACED 2" BEHIND THE BACK OF CURB.

4. DETECTABLE WARNINGS SHALL BE ADA SOLUTIONS, CAST IN PLACE REPLACEABLE TILE OR APPROVED EQUAL. BRICK RED IN COLOR FOR USE ON CONCRETE RAMPS AND BLACK IN COLOR FOR USE ON BRICK PAVER RAMPS.

Date: 05/01/2014

City of Dublin
ENGINEERING

STANDARD DRAWING

DETECTABLE WARNINGS

SHEET 1 OF 1

DRAWING NO. ***PD-03***

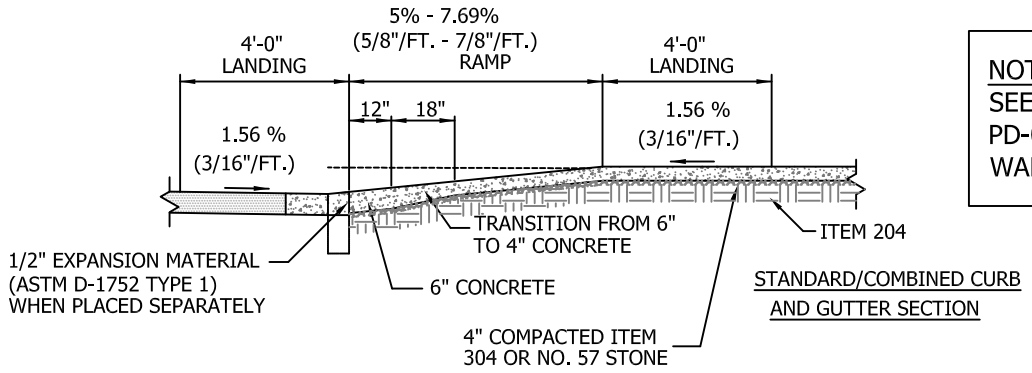

SECTION A-A

NOTE:
SEE STANDARD DRAWING PD-03 FOR DETECTABLE WARNINGS DETAILS

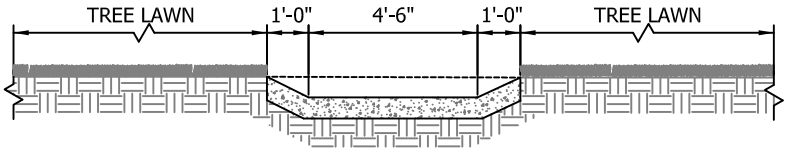

SECTION B-B

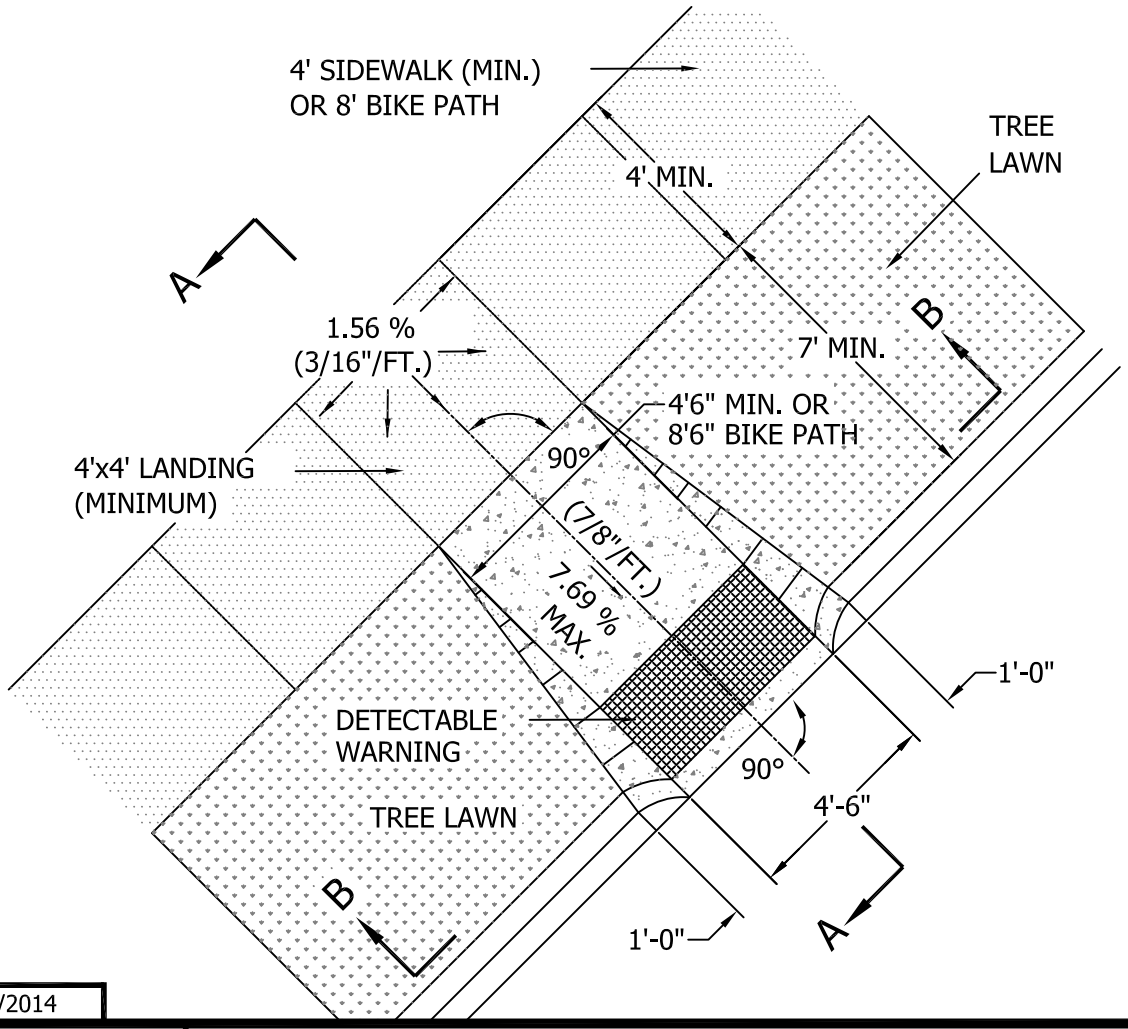

Date: 05/01/2014

City of Dublin
ENGINEERING

STANDARD DRAWING

CURB RAMP TYPE C IN TREE LAWN

SHEET 1 OF 1

DRAWING NO. ***PD-06***

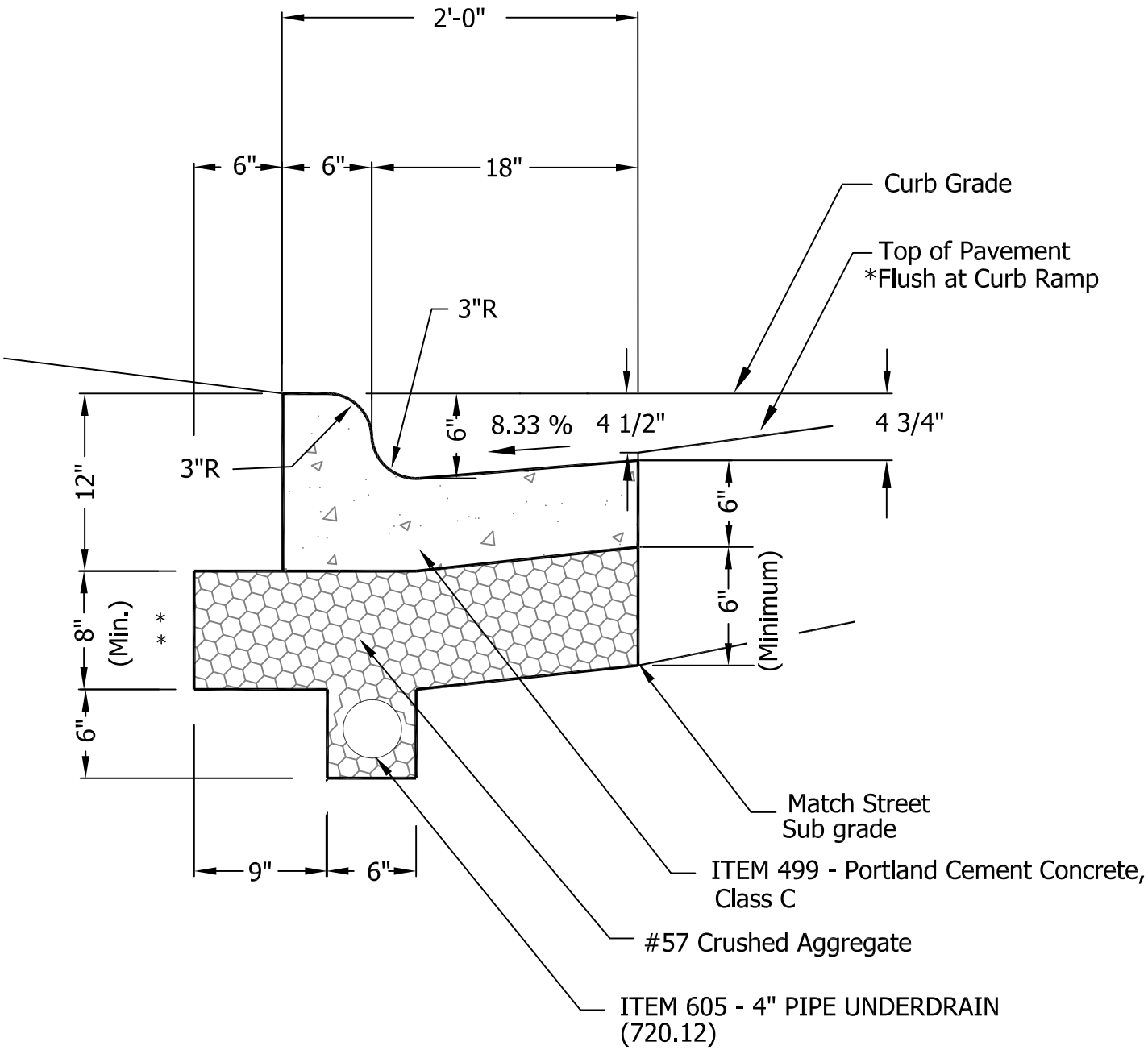

* SEE DRAWING RD-03 FOR GUTTER TRANSITION AT CURB RAMP.

** 10" AT COMMERCIAL DRIVE ENTRANCES.

Date: 05/01/2014

City of Dublin
ENGINEERING

STANDARD DRAWING

COMBINATION CONCRETE CURB AND GUTTER

SHEET 1 OF 1

DRAWING NO. ***RD-02***

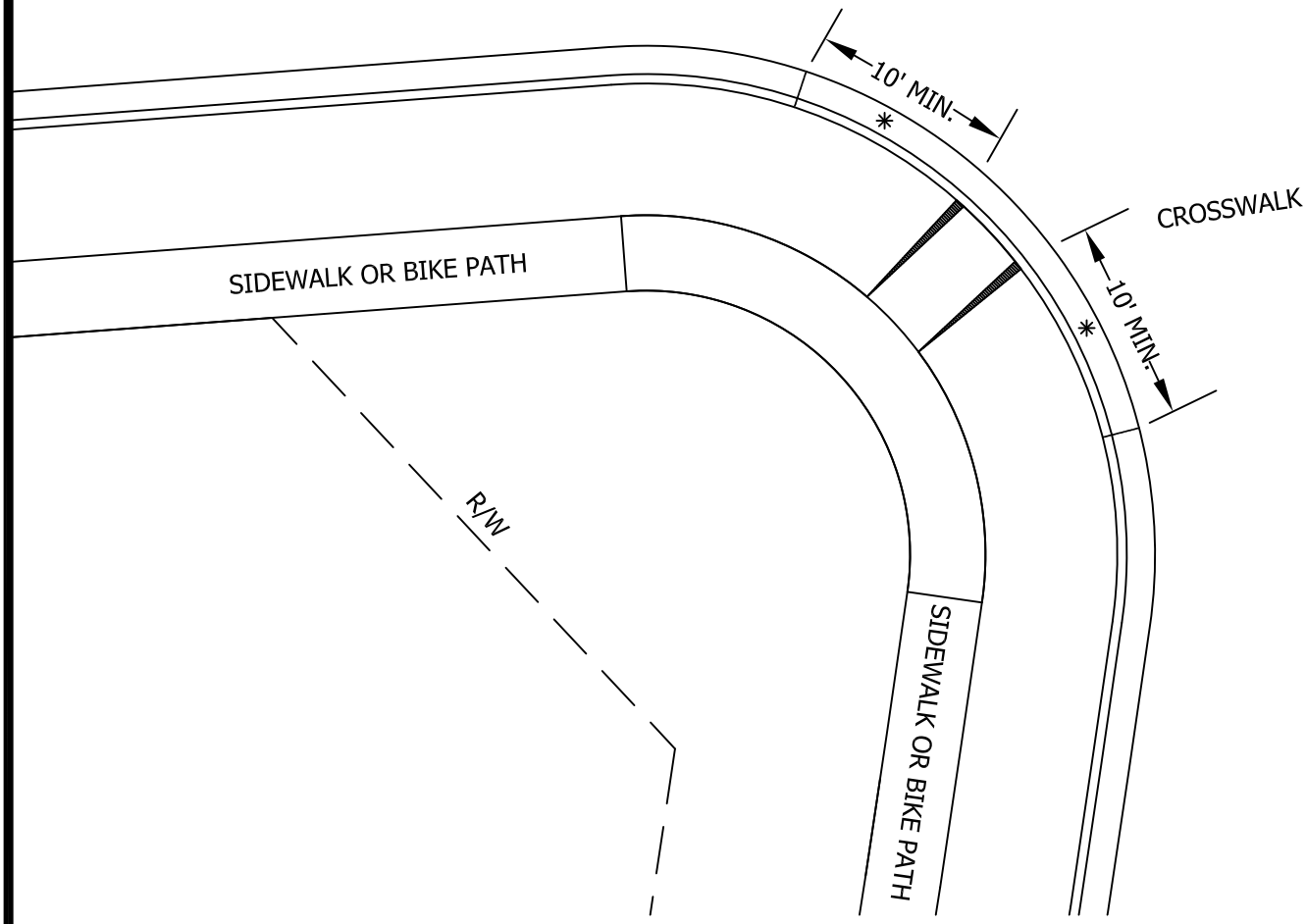

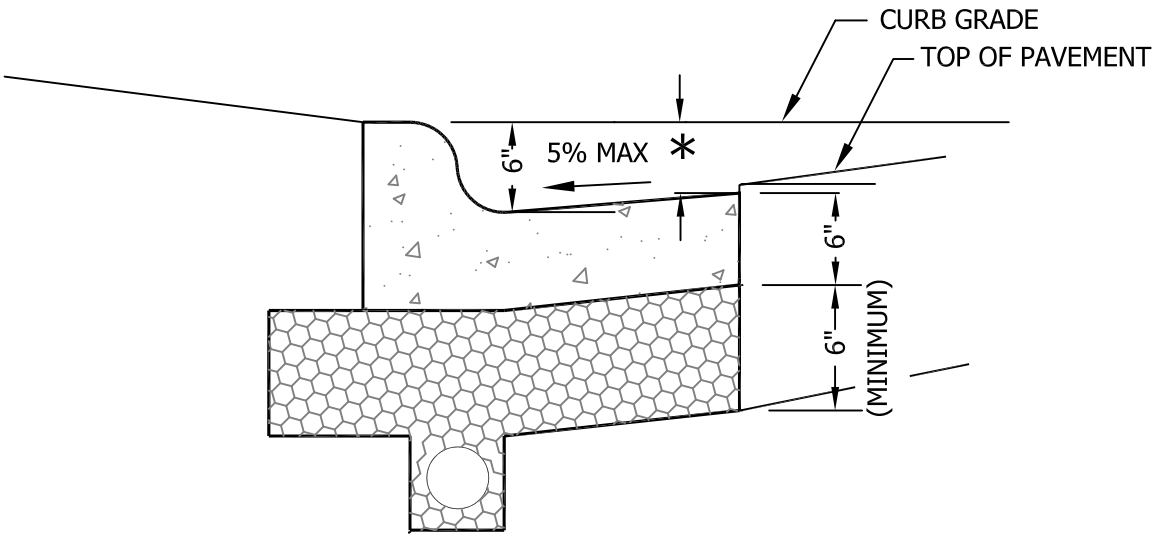

* TRANSITION GUTTER LIP FROM 4 1/2"-INCH TYPICAL DEPTH TO 5 5/8-INCH DEPTH WITHIN AT LEAST 10-FEET OF THE CURB RAMP. THE 5 5/8-INCH DEPTH IS TO BE MAINTAINED THROUGH THE CURB RAMP. THE TRANSITION LENGTH MAY BE ADJUSTED PER THE DIRECTION OF THE CITY ENGINEER.

Date: 05/01/2014

City of Dublin
ENGINEERING

STANDARD DRAWING

TYPICAL GUTTER SECTION TRANSITIONS

SHEET 1 OF 1

DRAWING NO. ***RD-03***

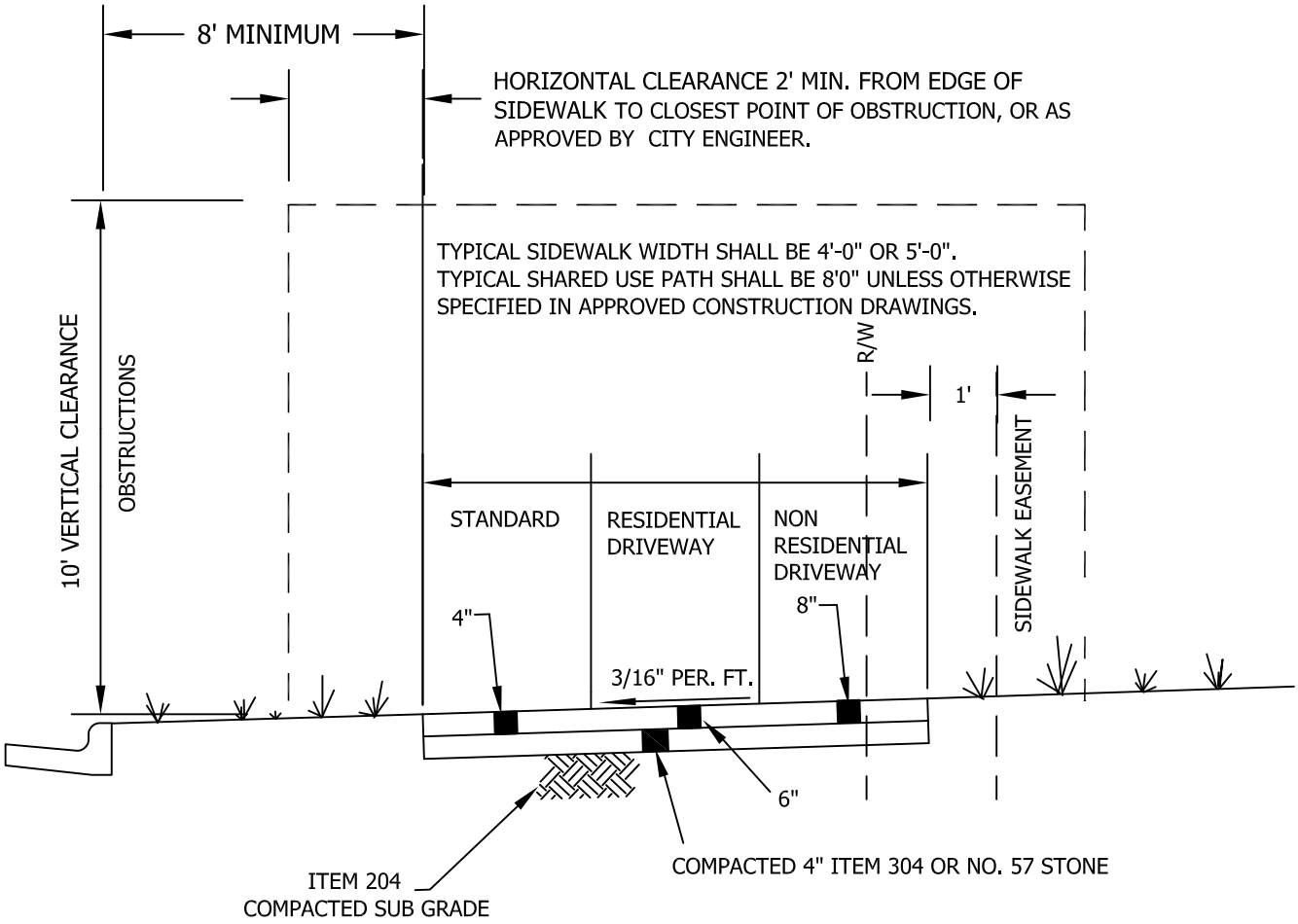

1. ALL WALKWAYS SHALL BE CONSTRUCTED PER CCMS ITEM 608 OR AS DIRECTED BY CITY ENGINEER.
2. ALL DISTURBED AREAS SHALL BE SEEDED AND MULCHED. SEED MIXTURE SHALL BE APPROVED BY THE CITY ENGINEER.
3. CITY OF COLUMBUS CONSTRUCTION AND MATERIAL SPECIFICATIONS, CURRENT EDITIONS, AND ANY OTHER SUPPLEMENTS THERETO, SHALL GOVERN ALL CONSTRUCTION ITEMS UNLESS OTHERWISE NOTED.
4. SIDEWALKS/BIKE PATHS CROSSING RESIDENTIAL DRIVEWAYS SHALL BE 6" CLASS C CONCRETE ITEM 499. SIDEWALKSSHARED USE PATHS CROSSING NON-RESIDENTIAL DRIVEWAY APPROACHES SHALL BE MINIMUM 8" CLASS C CONCRETE,ITEM 499 UNLESS OTHERWISE APPROVED BY THE CITY ENGINEER.
5. ALL COMMERCIAL DRIVES SHALL HAVE 6" OF ITEM 304.
6. INSPECTION SCHEDULING SHALL BE MADE WITH THE BUILDING DIVISION WHEN CONCRETE FORMS ARE READY FOR INSPECTION, AT LEAST 48 HOURS BEFORE CONCRETE IS TO BE PLACED AT (614) 410-4600.
7. ALL SHARED USE PATH JOINTS ARE TO BE SAWCUT.
8. SIDEWALKS/FLATWORK SHALL BE TOOL CUT & RETRACED.
9. FULL DEPTH EXPANSION MATERIAL (1/2" THICK) SHALL BE PLACED ADJOINING ALL EXISTING CONCRETE CONFORMING TO ASTM D-1752 TYPE 1.

Date: 05/01/2014

City of Dublin
ENGINEERING

STANDARD DRAWING

CONCRETE SIDEWALK AND SHARED USE PATH

SHEET 1 OF 1

DRAWING NO. ***RD-05***

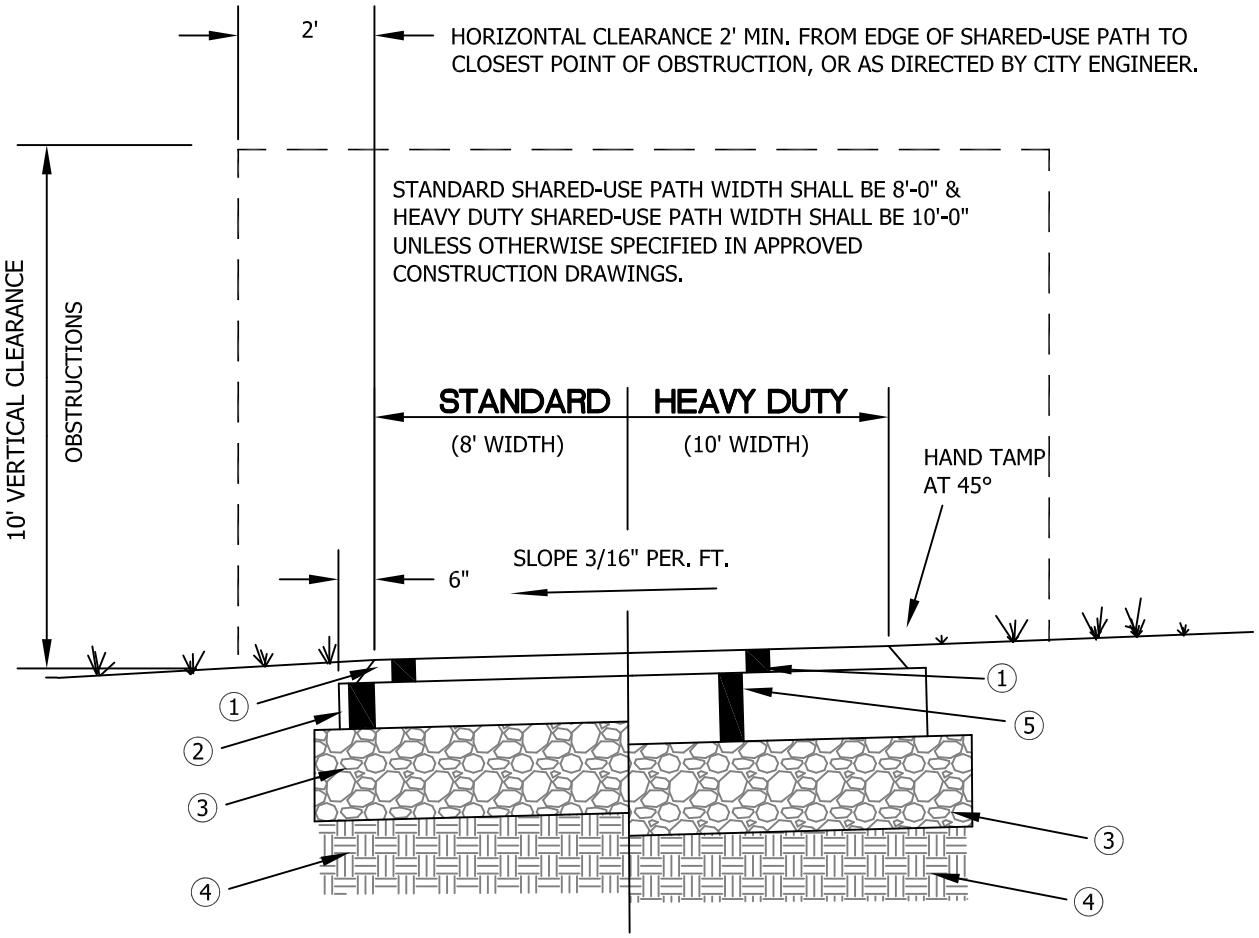

1. 1-1/2" ITEM 448, ASPHALT CONCRETE, SURFACE COURSE TYPE 1 (MEDIUM TRAFFIC), PG. 64-22
2. 3" ITEM 301, ASPHALT CONCRETE BASE
3. 6" ITEM 304, AGGREGATE BASE
4. ITEM 204, SUBGRADE COMPACTION
5. 4 1/2" ITEM 301, ASPHALT CONCRETE BASE

1. ALL TOPSOIL SHALL BE REMOVED FROM SUB GRADE AREAS. ITEM 204 SHALL BE COMPACTED TO NO LESS THAN 98% OF MAX. DRY DENSITY. EXCESS EXCAVATED MATERIAL SHALL BE REMOVED FROM THE SITE.
2. ALL DISTURBED AREAS SHALL BE SEEDED AND MULCHED. SEED MIXTURE REQUIRES THE APPROVAL OF THE CITY ENGINEER.
3. PAVEMENT MARKINGS AND SIGNAGE SHALL CONFORM TO OHIO MANUAL ON UNIFORM TRAFFIC CONTROL DEVICES.
4. SHARED-USE PATHS CROSSING CONCRETE RESIDENTIAL DRIVEWAY APPROACHES SHALL BE 6" PC CONCRETE ACROSS THE WIDTH OF THE DRIVEWAY APPROACH, UNLESS OTHERWISE APPROVED BY THE CITY ENGINEER. SHARED-USE PATHS CROSSING RESIDENTIAL DRIVEWAY APPROACHES SHALL MATCH THE THICKNESS AND CROSS-SECTION OF THE DRIVEWAY APPROACH OR 8" PC CONCRETE, WHICHEVER IS GREATER, AS APPROVED BY THE CITY ENGINEER.
5. FOR GEOMETRIC STANDARDS FOR CURB RAMP REFER TO DUBLIN STD. DWG. PD-01.

Date: 05/01/2014

City of Dublin
ENGINEERING

STANDARD DRAWING

SHARED-USE PATH: STANDARD AND HEAVY DUTY

SHEET 1 OF 1

DRAWING NO. **RD-06**

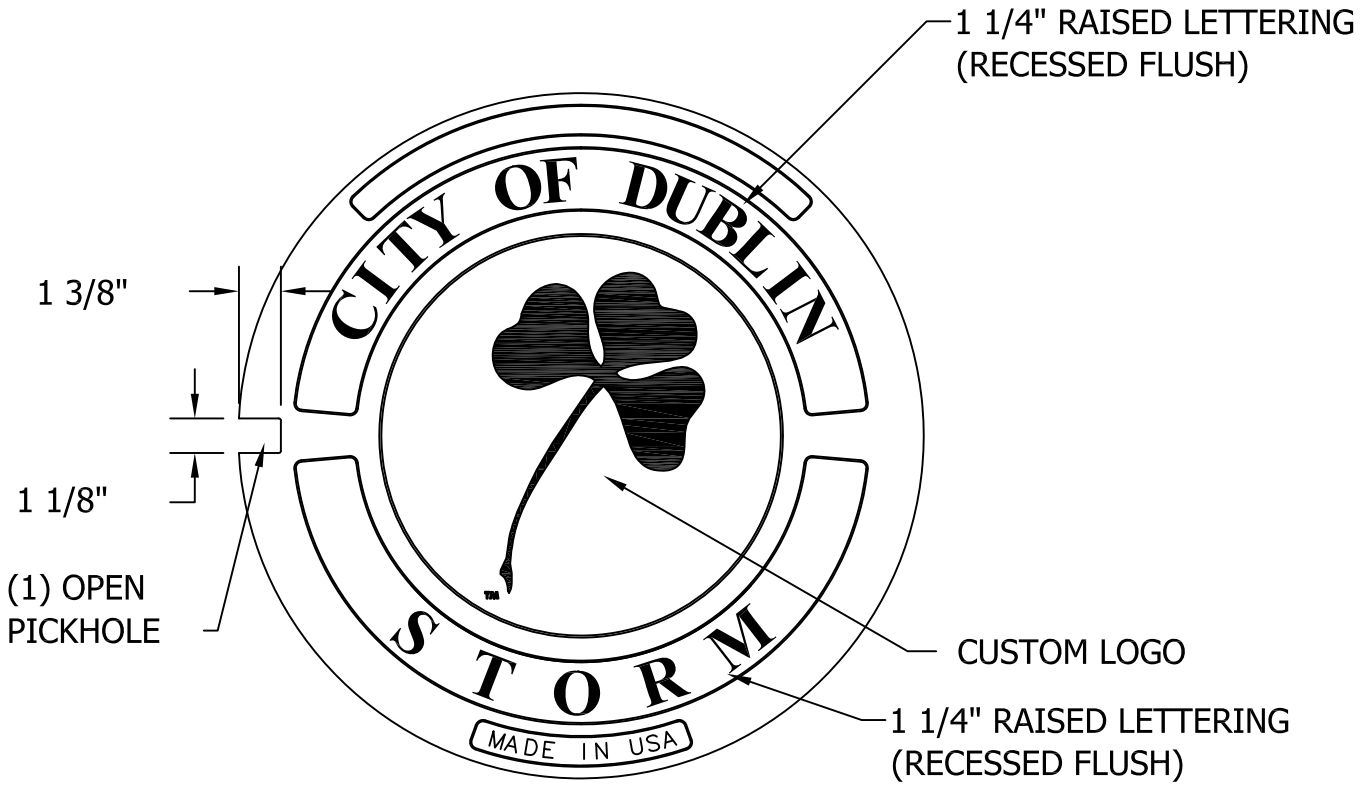

COVER FACE

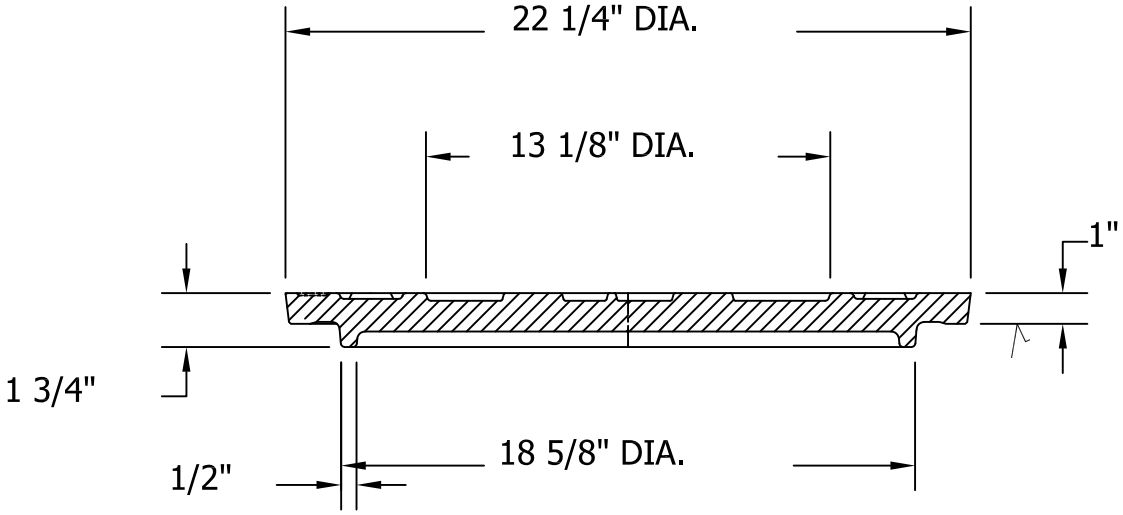

COVER SECTION

Date: 05/01/2014

City of Dublin
ENGINEERING

STANDARD DRAWING

STORM SEWER MANHOLE LID

SHEET 1 OF 1

DRAWING NO. ***ST-03***

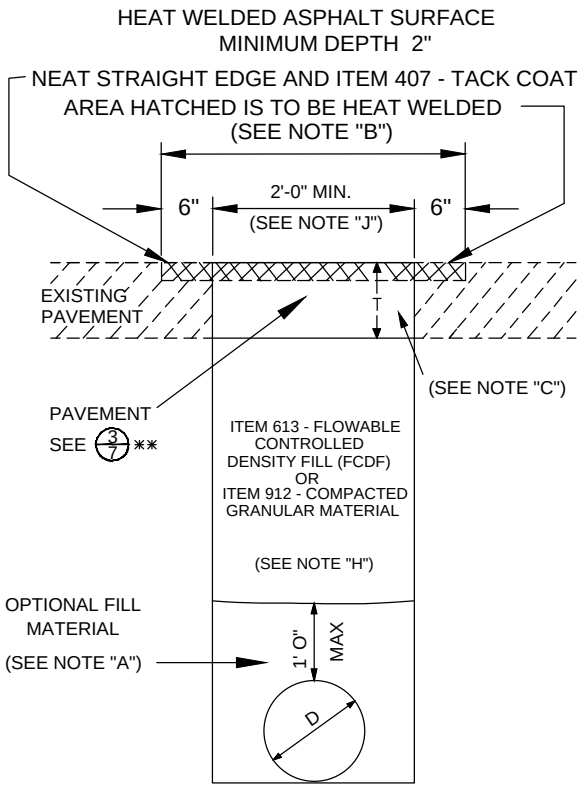

TYPE I

STANDARD FLEXIBLE ASPHALT REPAIR WITH HEATWELD SURFACE (SEE NOTE "B")

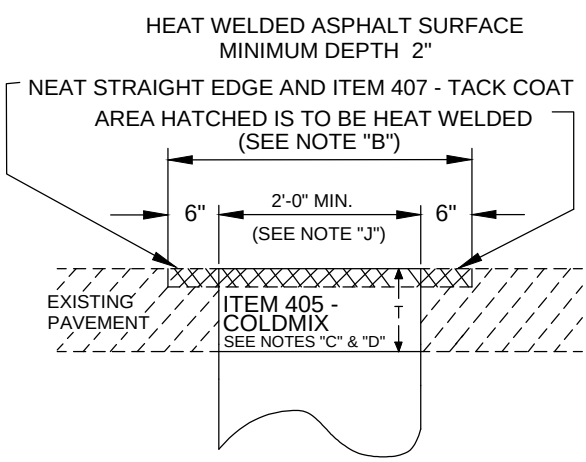

TYPE II

WINTER OPERATIONS FLEXIBLE ASPHALT REPAIR WITH HEATWELD SURFACE (SEE NOTE "E")

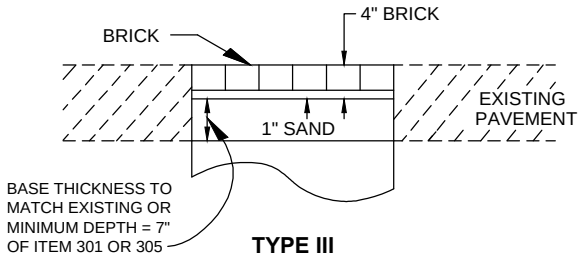

TYPE III

BRICK STREET REPAIR (SEE NOTE "F")

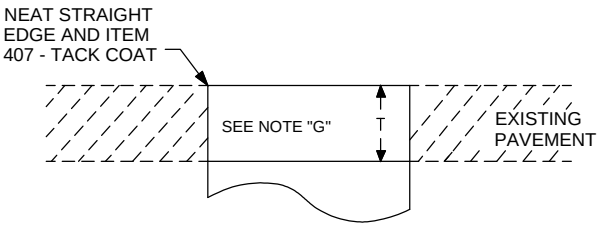

TYPE IV

ALLEY REPAIR

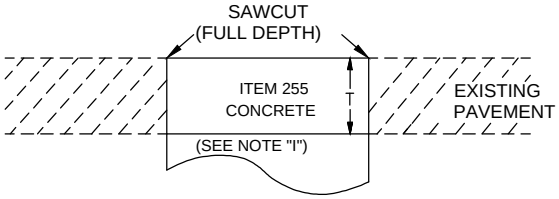

TYPE V

CONCRETE STREET REPAIR OR CONCRETE BUS PAD

BACKFILL FOR ALL TYPES SHALL MEET THE REQUIREMENTS SHOWN IN TYPE I ABOVE.

T: MATCH EXISTING PAVEMENT THICKNESS, HOWEVER, MINIMUM OF 10" ON ALL STREET CUTS AND 6" ON ALL ALLEYS.

PAVEMENT & UTILITY CUT REPAIR STANDARDS

CITY OF COLUMBUS, OHIO
DEPARTMENT OF PUBLIC SERVICE
DIVISION OF DESIGN AND CONSTRUCTION

STD DWG
1441

12/1/13

CITY ENGINEER

SHT 1 OF 7

SIDEWALK AND CURB REPAIR DETAILS

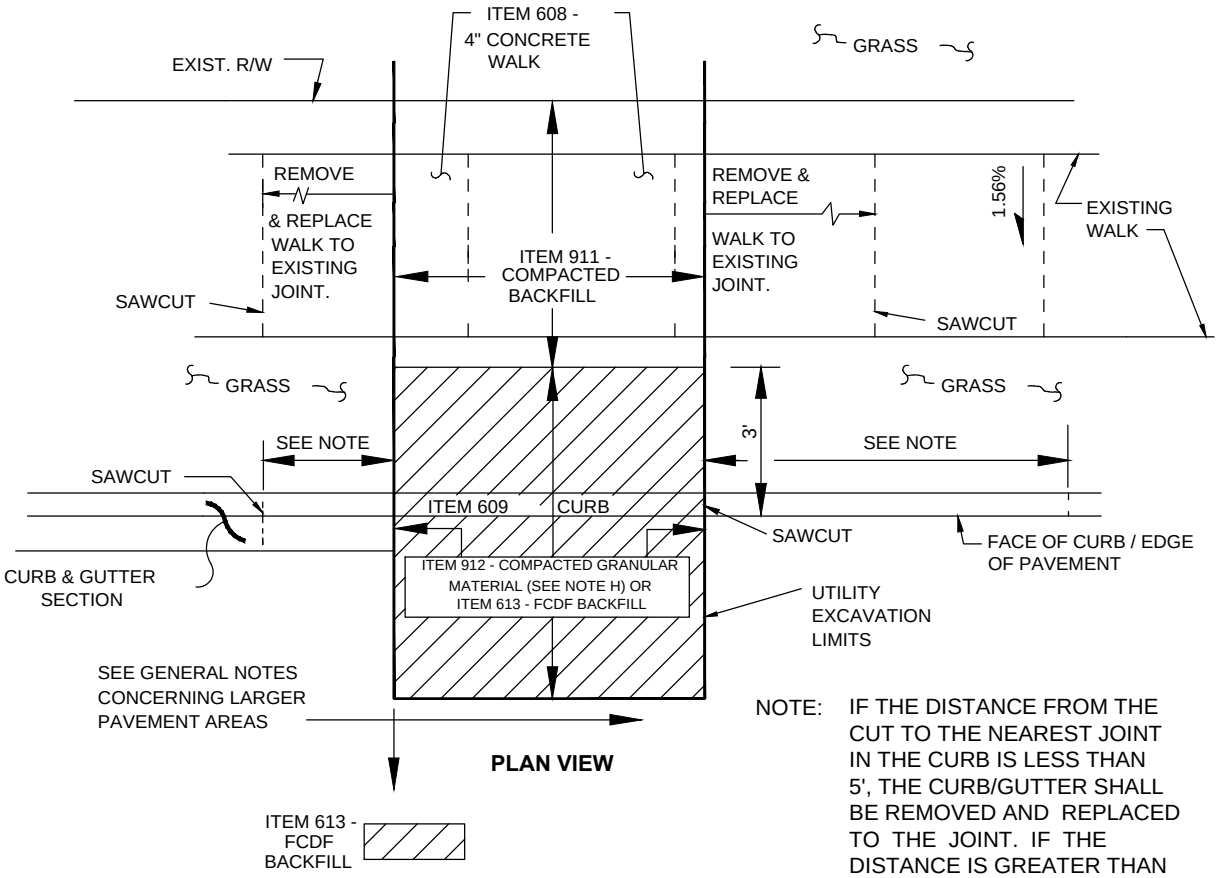

NOTE: IF THE DISTANCE FROM THE CUT TO THE NEAREST JOINT IN THE CURB IS LESS THAN 5', THE CURB/GUTTER SHALL BE REMOVED AND REPLACED TO THE JOINT. IF THE DISTANCE IS GREATER THAN 5', THE CURB MAY REMAIN.

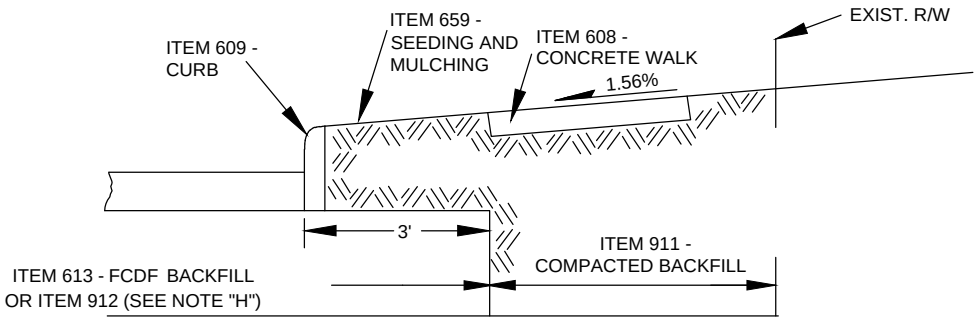

BOTTOM OF EXCAVATION

ALL GRASS AREAS SHALL BE SEEDED IN ACCORDANCE WITH ITEM 659 - SEEDING AND MULCHING.

PAVEMENT & UTILITY CUT REPAIR STANDARDS

CITY OF COLUMBUS, OHIO
DEPARTMENT OF PUBLIC SERVICE
DIVISION OF DESIGN AND CONSTRUCTION

STD DWG
1441

12/1/13

GENERAL NOTES

EXCAVATION PERMIT REQUIRED: A CITY OF COLUMBUS STREET EXCAVATION PERMIT IS REQUIRED FOR ALL EXCAVATIONS WITHIN THE PUBLIC RIGHT-OF-WAY, AS SET FORTH BY COLUMBUS CITY CODE, CHAPTER 903 AND ISSUED IN ACCORDANCE WITH PROVISIONS IN THE GENERAL RULES AND REGULATIONS OF THE DEPARTMENT OF PUBLIC SERVICE.

SCOPE OF WORK

THIS WORK SHALL CONSIST OF PAVEMENT REMOVAL, NECESSARY EXCAVATION, AND PAVEMENT REPLACEMENT IN ACCORDANCE WITH THE DETAILS SHOWN HEREIN. ALL WORK AND MATERIALS SHALL CONFORM TO THE REQUIREMENTS OF THE CURRENT CITY OF COLUMBUS CONSTRUCTION AND MATERIALS SPECIFICATION (CMSC).

PROCEDURES USED FOR THE PAVEMENT REMOVAL AND REPLACEMENT SHALL NOT CAUSE SPALLING OR CRACKING OF ADJACENT PAVEMENT.

WHEN THE PAVEMENT IS REMOVED AND THE CONTRACTOR IS UNABLE TO COMPLETE THE REQUIRED REPLACEMENT IN TIME FOR IT TO BE OPENED TO TRAFFIC AS INDICATED ON THE PERMIT, THE EXCAVATION SHALL BE FILLED WITH A BITUMINOUS PATCH MATERIAL WITH A DURABLE SURFACE OR PROPERLY PLATED. (AS PER CITY CODE CHAPTER 903 &/OR SHEET 7 OF THIS STANDARD DRAWING) THE CONTRACTOR WILL BE REQUIRED TO MAINTAIN THESE PATCHES WHILE THEY ARE IN SERVICE. THE COST OF PLACING, MAINTAINING, AND REMOVING AND DISPOSING OF THE TEMPORARY PATCHES OR PLATES WILL BE AT THE CONTRACTOR'S EXPENSE.

WHEN ITEM 613 FCDF IS USED AS A BACKFILL, NO PAVEMENT SHALL BE PLACED UNTIL BLEED WATER HAS BEEN EVAPORATED FROM THE FCDF SURFACE OR HAS BEEN DRAINED OR REMOVED FROM THE SURFACE. ITEM 613 FCDF IS NOT PERMITTED AS A TEMPORARY DRIVING SURFACE.

THE BACKFILLING PAVEMENT REPAIR AND/OR HEAT WELDING SHALL BE DONE BY THE CONTRACTOR OR PERMITEE IN ACCORDANCE WITH CITY SPECIFICATIONS. IF DESIRED, ANY OR ALL OF THIS WORK CAN BE PERFORMED BY THE CITY OF COLUMBUS. THE CITY SHALL COLLECT APPROPRIATE FEES AT THE TIME THE PERMIT IS ISSUED FOR SAID WORK.

RESTORATION OF ANY SIDEWALK, CURB, STREET PAVEMENT, ETC., SHALL OCCUR NO LATER THAN 30 DAYS AFTER CONCLUSION OF ANY UTILITY REPAIR OR INSTALLATION ACTIVITY. CONSTRUCTION ACTIVITY COMPLETED DECEMBER THROUGH APRIL SHALL BE RESOLVED NO LATER THAN MAY 31ST. ADDITIONAL PERMITS SHALL NOT BE ISSUED UNTIL THE VIOLATIONS ARE CORRECTED TO THE SATISFACTION OF THE DEPARTMENT OF PUBLIC SERVICE. IN ADDITION, EACH VIOLATION MAY BE DEALT WITH IN ACCORDANCE WITH SECTION 903.99 OF THE COLUMBUS CITY CODE.

** PAVING STANDARDS FOR LARGE TRENCHES OR PAVING AREAS

THE PAVEMENT REPAIR SECTION SHALL CONFORM TO 3 INCHES OF ITEM 448 ASPHALT CONCRETE ON EITHER 7 INCHES OF ITEM 301 ASPHALT CONCRETE BASE OR ITEM 305 PORTLAND CEMENT CONCRETE BASE.

PAVEMENT & UTILITY CUT REPAIR STANDARDS

CITY OF COLUMBUS, OHIO
DEPARTMENT OF PUBLIC SERVICE
DIVISION OF DESIGN AND CONSTRUCTION

STD DWG
1441

12/1/13

WHEN A TRENCH EXCEEDS 100 FT IN LENGTH, THE REPAIR SHALL INCLUDE PLANING A FULL LANE WIDTH (OR ANY OTHER LANE WIDTH AS DIRECTED BY THE DEPARTMENT OF PUBLIC SERVICE) TO A DEPTH OF 1 ½ INCHES FOR THE ENTIRE LENGTH OF THE TRENCH. THE PLANED AREA SHALL THEN BE REPAVED WITH A PAVER IN ACCORDANCE WITH CURRENT CITY STANDARD SPECIFICATIONS. ITEM 423 - CRACK SEALING, TYPE 1 SHALL BE APPLIED TO EXPOSED JOINTS ONCE THE PAVING OPERATION HAS BEEN COMPLETED.

WHEN TRENCHING WORK CROSSES LANES, ALL AFFECTED LANES SHALL REQUIRE PLANING AND RESURFACING AS DESCRIBED ABOVE. THIS WORK SHALL INCLUDE ALL OF THE AFFECTED PAVEMENT AREA.

SPECIAL NOTES

NOTE 'A' : WHEN USING FLOWABLE CONTROLLED DENSITY FILL (FCDF), THE OPTIONAL FILL AREA OVER THE CONDUIT MAY BE BACKFILLED WITH SAND, GRANULAR MATERIAL, OR OTHER SUITABLE 912 MATERIAL, FOR A DISTANCE NOT TO EXCEED 1 FT. A PROTECTIVE BARRIER OF VISQUEEN OR SIMILAR MATERIAL IS PERMITTED.

NOTE 'B' : FOR TYPE I AND TYPE II CUT REPAIRS, THE AREA TO BE HEAT WELDED IS TO INCLUDE THE CUT AND EXTEND FOR 6 INCHES BEYOND EACH SIDE OF THE CUT FOR A NOMINAL DEPTH OF 2 INCHES.

NOTE 'C' : FOR TYPE I AND TYPE II PAVEMENT REPAIR, THE ITEM 448 HOT ASPHALT CONCRETE OR ITEM 405 COLD MIX SHALL BE PLACED IN LIFTS NOT EXCEEDING 3 INCHES AND COMPACTED WITH A COMBINATION VIBRATORY PLATE COMPACTOR, OR A VIBRATORY STEEL WHEELED ROLLER WITH A MINIMUM CERTIFIED FORCE OF 2000 POUNDS. IN ALL CASES THE SURFACE LIFT SHALL BE COMPACTED WITH THE VIBRATORY STEEL WHEELED ROLLER. WHEN PLACING ITEM 405 COLD MIX FULL DEPTH, MATERIAL TEMPERATURE SHALL BE 70 DEGREES OR ABOVE.

NOTE 'D' : COLD MIX SHALL BE ITEM 405 COLD MIX OR OTHER COLD MIX APPROVED BY THE CITY OF COLUMBUS. IN LIEU OF COLD MIX, THE CONTRACTOR MAY STOCKPILE ITEM 448 ASPHALT CONCRETE AND REHEAT IT TO PLACE IN CUT AS PAVEMENT REPAIR. TYPE II PAVEMENT REPLACEMENT SHALL CONSIST OF FULL DEPTH ITEM 405 COLD MIX FOR SMALL EXCAVATIONS. LARGE EXCAVATIONS SHALL REQUIRE A MINIMUM OF 7 INCHES OF FAST SETTING PORTLAND CEMENT AND 2 INCHES OF ITEM 405 COLD MIX.

NOTE 'E' : THE COLD MIX IS TO BE REPLACED WITH ITEM 448 ASPHALT CONCRETE WHICH IS TO BE HEAT WELDED AS SET FORTH IN NOTE 'B'. THIS WORK SHALL BE PERFORMED AS SOON AS ASPHALT IS AVAILABLE.

PAVEMENT & UTILITY CUT REPAIR STANDARDS

CITY OF COLUMBUS, OHIO
DEPARTMENT OF PUBLIC SERVICE
DIVISION OF DESIGN AND CONSTRUCTION

STD DWG
1441

12/1/13

NOTE 'F' : REPAIR OF BRICK STREETS

1. BRICKS REMOVED FROM A REPAIR AREA SHALL BE STORED IN A SAFE PLACE BY THE CONTRACTOR FOR REUSE. THE CONTRACTOR WILL BE RESPONSIBLE FOR REPLACING ANY BRICKS THAT ARE STOLEN OR DAMAGED, AT NO ADDITIONAL COST TO THE CITY.

2. IF BRICKS ARE SUPPLIED BY THE CONTRACTOR, THEY MUST FIRST BE APPROVED BY THE CITY BEFORE THEY ARE USED.

3. SAW CUTTING: ALL PARTIAL BRICKS SHALL BE SAWCUT. FURTHER, NO BRICK WILL BE PERMITTED TO BE CUT, FOR REPLACEMENT, TO A LENGTH LESS THAN $\frac{1}{2}$ ITS ORIGINAL LENGTH. THIS MAY REQUIRE SAW CUTTING OF ADJACENT UNDISTURBED BRICK(S).

4. THE EXISTING BASE MATERIAL SHALL BE CUT BACK TO AS NEARLY VERTICAL AS POSSIBLE. IF SHEARING OF THE ADJACENT BASE RESULTS, THE CONTRACTOR SHALL REMOVE ADDITIONAL BASE MATERIAL UNTIL A VERTICAL FACE IS ACHIEVED.

5. THE MAXIMUM WIDTH OF A BRICK MORTAR JOINT SHALL BE $\frac{1}{2}$ INCH. THIS RESTRICTION SHALL ALSO APPLY TO THE JOINT FORMED ADJACENT TO THE PERIMETER OF A REPAIR AREA, WHERE THE ROWS MAY NOT BE PARALLEL TO ONE ANOTHER.

6. MORTARING OF JOINTS: ALL JOINTS SHALL BE MORTARED WITH A 50/50 MIXTURE BY VOLUME OF SAND AND CEMENT SO AS TO PROVIDE A FLUSH FINISH. THIS MAY REQUIRE MORE THAN ONE APPLICATION. FURTHER, MECHANICAL VIBRATION WILL BE REQUIRED FOR CONSOLIDATION OF DRY MORTAR MIX.

NOTE 'G' : FOR ALLEY REPAIRS, THE PAVEMENT REPLACEMENT SHALL CONFORM TO THE TYPE AND THICKNESS OF THE EXISTING PAVEMENT. CHIP AND SEAL TYPE ALLEYS SHALL REQUIRE MATCHING THE EXISTING THICKNESS OF PAVEMENT WITH THE APPROPRIATE COMBINATION OF MATERIALS BASED ON THE SIZE OF THE EXCAVATION. THE MINIMUM SHALL CONSIST OF 6" OF ITEM 448 ASPHALT CONCRETE. FINISHED CONCRETE PAVEMENT IS NOT PERMITTED. MATERIALS USED SHALL CONFORM TO THE REQUIREMENTS OF THE CURRENT CMSC.

IF MORE THAN $\frac{1}{3}$ OF THE WIDTH OF AN ALLEY IS REMOVED, THE PAVEMENT SHALL BE REPLACED AS PER TYPE 1 AND THEN OVERLAYED OVER THE TOTAL WIDTH OF PAVEMENT AND LENGTH OF TRENCH.

NOTE 'H' : ITEM 912 - COMPACTED GRANULAR MATERIAL:
THIS METHOD OF BACKFILL CAN ONLY BE USED WITH FULL TIME CITY INSPECTION. AN INSPECTION FEE MUST BE POSTED WHEN THE PERMIT IS ISSUED.

NOTE 'I' : CONCRETE BASE OR PAVEMENT
IF PAVING REQUIREMENTS ALLOW FOR SUFFICIENT CURING TIME SO THAT FAST SETTING CONCRETE IS NOT NEEDED, STANDARD CONCRETE BASE OR PAVEMENT MAY BE PLACED AS PER THE CMSC. THIS OPTION MUST BE NOTED ON THE PERMIT APPLICATION AND APPROVED BY THE CITY OF COLUMBUS.

NOTE 'J' : THE TRENCH WIDTH FOR SMALL PIPES AND CONDUITS SHALL BE OF SUFFICIENT WIDTH TO ALLOW FOR THE PROPER PLACEMENT OF THE BACKFILL MATERIAL. THE PAVEMENT PORTION OF THE TRENCH SHALL BE A MINIMUM OF 2 FT IN WIDTH. THIS IS TO ALLOW FOR THE PROPER COMPACTION OF THE ASPHALT PAVEMENT. IF THE TRENCH FOR PLACING CONDUIT IS NARROWER THAN 2 FT THEN THE PAVEMENT PORTION SHALL BE CUT BACK TO PROVIDE THE 2 FT MINIMUM FOR PAVING OPERATIONS.

PAVEMENT & UTILITY CUT REPAIR STANDARDS

CITY OF COLUMBUS, OHIO
DEPARTMENT OF PUBLIC SERVICE
DIVISION OF DESIGN AND CONSTRUCTION

STD DWG
1441

12/1/13

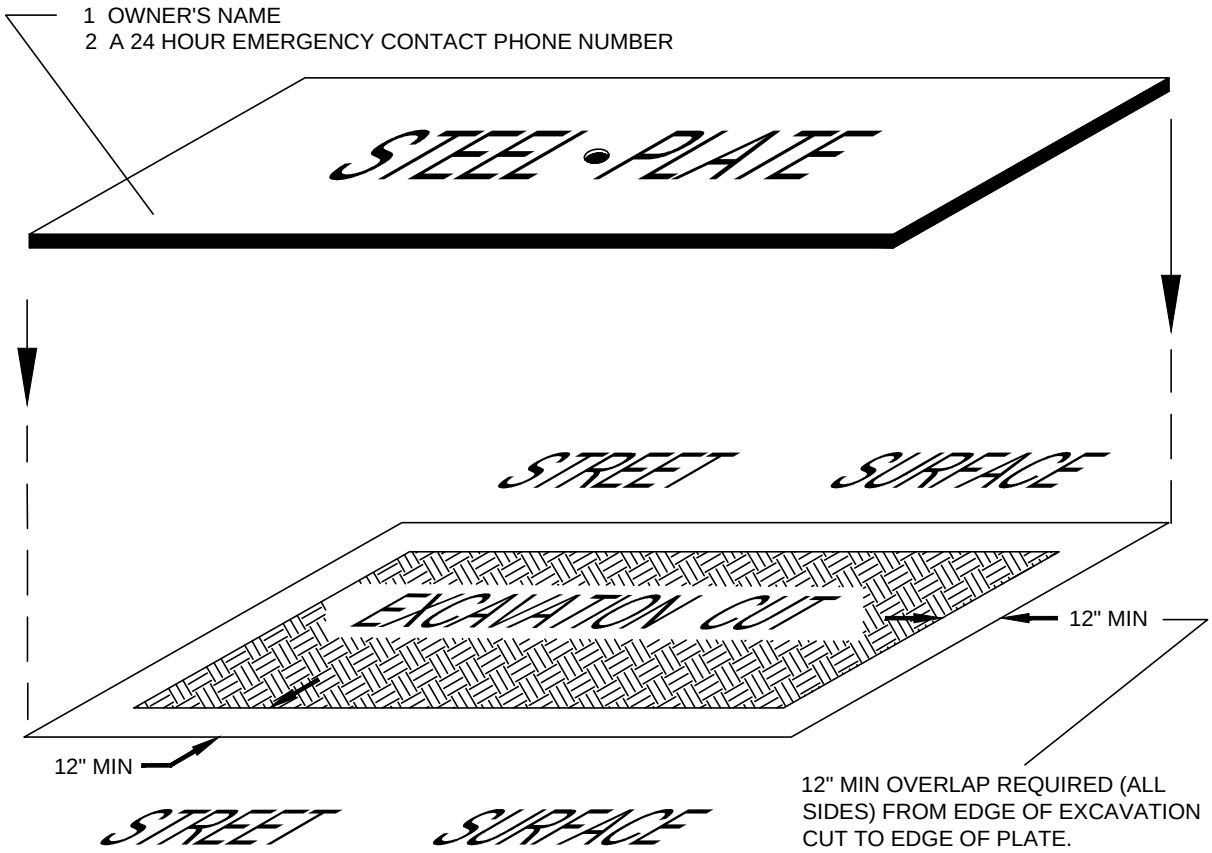

ALL STEEL PLATES MUST HAVE THE FOLLOWING INFORMATION CLEARLY AND LEGIBLY 'ETCHED' INTO THEIR TOP SURFACE:

1 OWNER'S NAME
2 A 24 HR. EMERGENCY CONTACT PHONE NUMBER.

NO STEEL PINS ARE PERMITTED.

SEE SHEET 7 FOR SIGNING REQUIREMENTS.

STEEL PLATE REQUIREMENTS

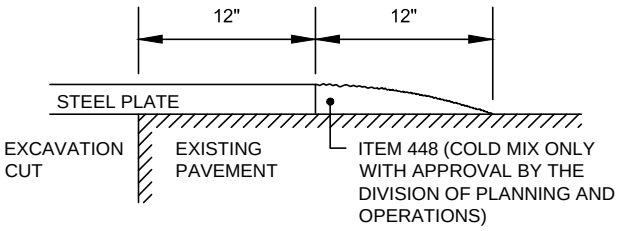

PAVEMENT & UTILITY CUT REPAIR STANDARDS

CITY OF COLUMBUS, OHIO
DEPARTMENT OF PUBLIC SERVICE
DIVISION OF DESIGN AND CONSTRUCTION

STD DWG
1441

12/1/13

SIGNS ARE TO BE 36" x 36" FOR RESIDENTIAL AND DOWNTOWN AREAS AND 48" x 48" ON MULTI-LANE, HIGH SPEED (45 MPH OR GREATER) ROADWAYS.

SIGN COC - 327 (R/L) IS REQUIRED AT ALL PLATE LOCATIONS. SIGN COC - 328 IS REQUIRED WHEN POSTED SPEED IS 35 MPH OR GREATER.

SIGNS SHOULD BE PLACED IN ALL DIRECTIONS THAT ARE AFFECTED.

SIGNS SHOULD BE DUAL MOUNTED ON MULTI-LANE, ONE-WAY ROADWAYS.

ALL SIGNS SHALL BE MOUNTED IN ACCORANCE WITH THE OHIO MANUAL OF UNIFORM TRAFFIC CONTROL DEVICES (OMUTCD).

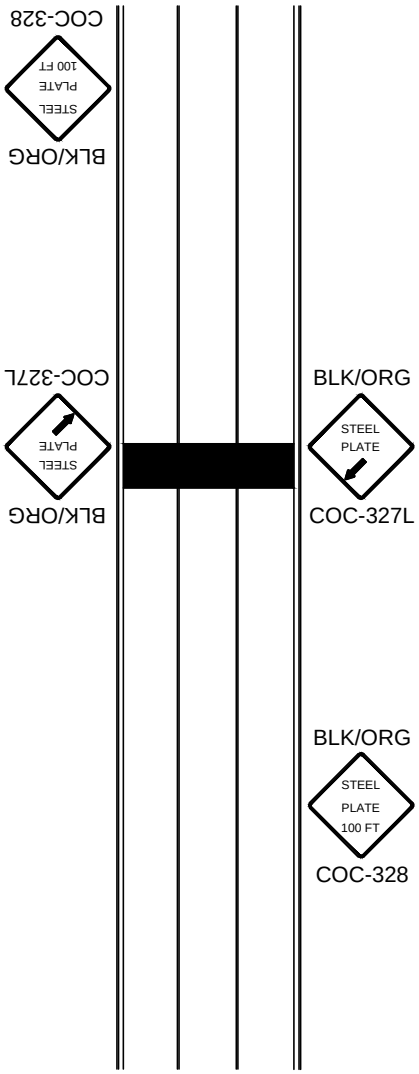

STEEL PLATE REQUIREMENTS

PAVEMENT & UTILITY CUT REPAIR STANDARDS

CITY OF COLUMBUS, OHIO
DEPARTMENT OF PUBLIC SERVICE
DIVISION OF DESIGN AND CONSTRUCTION

STD DWG
1441

12/1/13

SHT 7 OF 7

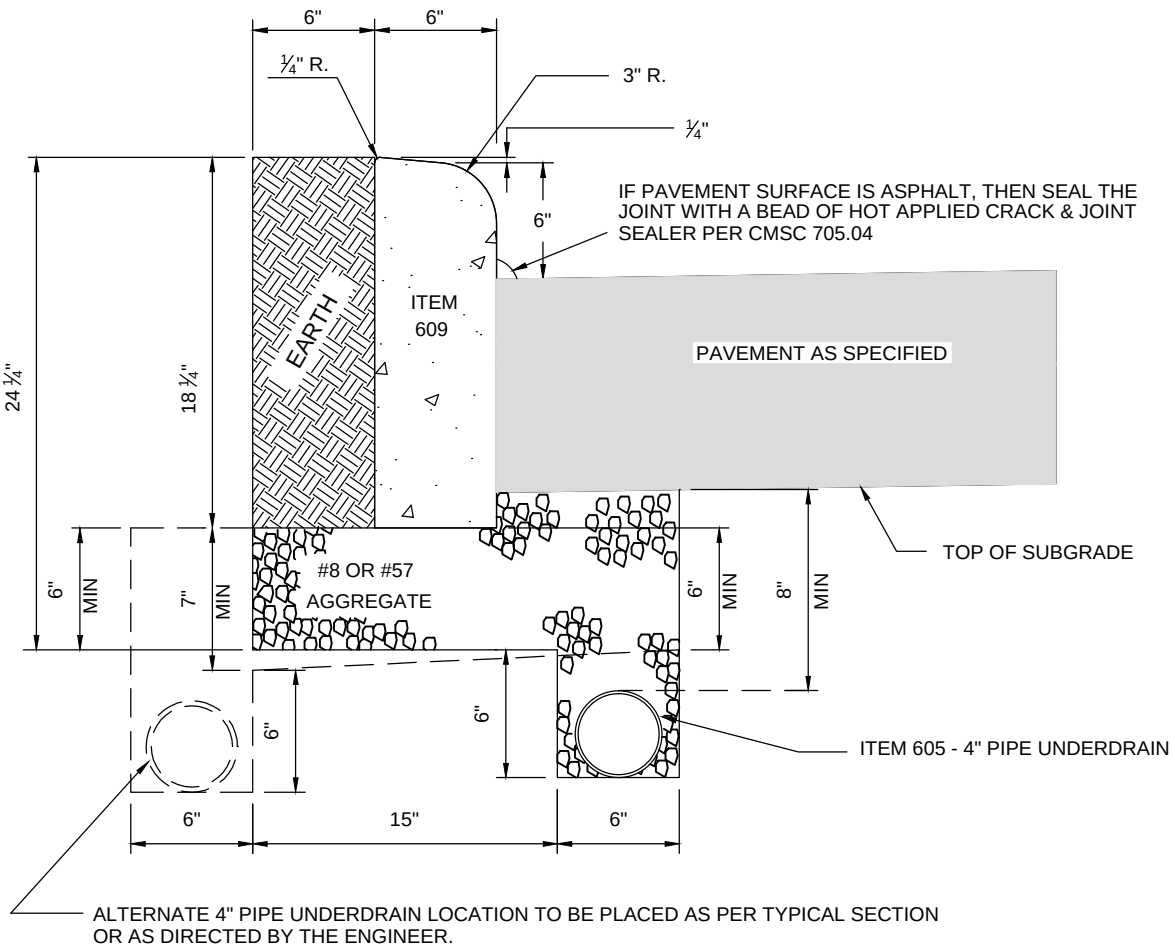

0.74 C.F. CONCRETE PER L.F.

IF THE TOP OF THE SUBGRADE IS BELOW THE BOTTOM OF THE CURB, THE UNDERDRAIN SHALL BE ADJUSTED TO KEEP THE TOP OF THE UNDERDRAIN AT LEAST 8" BELOW THE TOP OF THE SUBGRADE; AGGREGATE DEPTH BETWEEN BOTTOM OF CURB AND TOP OF UNDERDRAIN MAY VARY IF THIS OCCURS.

SUBGRADE COMPACTION SHALL BE COMPLETED BEFORE UNDERDRAIN INSTALLATION.

WHEN A CURB AND GUTTER INLET IS INSTALLED, THE TOP OF THE CASTING SHALL BE THE SAME AS THE TOP OF CURB ELEVATION. THE EDGE OF PAVEMENT ELEVATION SHALL BE 3/8" HIGHER THAN THE GRATE WHEREVER THEY MEET.

FOR REPLACEMENT WORK, THE CURB SHALL BE REMOVED AT AN EXISTING JOINT OR NO CLOSER THAN 5 FEET FROM AN EXISTING JOINT.

1/2" EXPANSION MATERIAL WILL BE INSTALLED BEHIND THE CURB WHEN A CONCRETE WALK, DRIVE, OR OTHER CONCRETE ITEM IS ADJOINING IT.

CURB, STRAIGHT 18"

CITY OF COLUMBUS, OHIO DEPARTMENT OF PUBLIC SERVICE DIVISION OF DESIGN AND CONSTRUCTION	STD DWG 2000
Hassan Zahran	6/1/13
CITY ENGINEER	SHT 1 OF 1

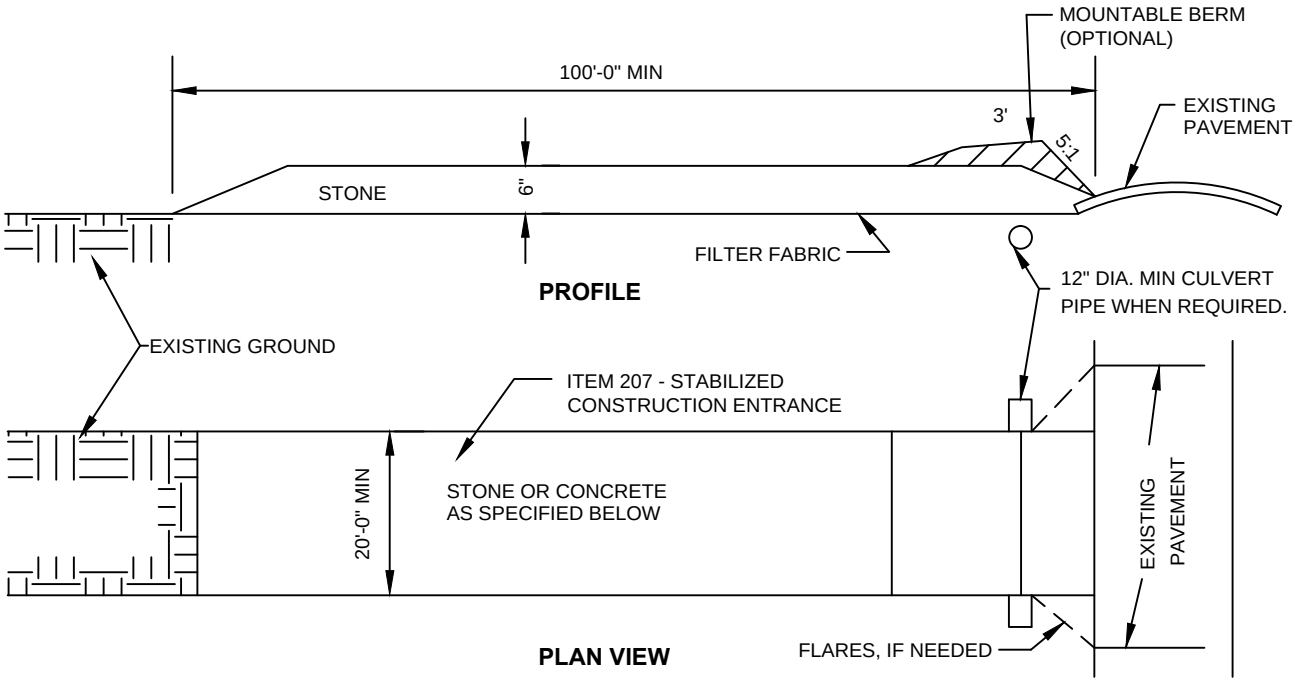

STABILIZED CONSTRUCTION ENTRANCE

1. STONE SIZE - USE 2" STONE OR RECLAIMED OR RECYCLED CONCRETE EQUIVALENT.
2. LENGTH - A MINIMUM OF 100', BUT MAY BE LONGER AS DETERMINED BY THE CITY OF COLUMBUS.
3. THICKNESS - NOT LESS THAN SIX (6) INCHES.
4. WIDTH - TWENTY (20) FEET MINIMUM BUT NOT LESS THAN THE FULL WIDTH AT POINTS WHERE INGRESS OR EGRESS OCCURS. MAY BE WIDER AS DETERMINED BY THE CITY OF COLUMBUS.
5. FLARES OR RADII SHALL BE INSTALLED AT THE ENTRANCE IF THE PUBLIC ROADWAY SPEEDS AND/OR TRAFFIC CONDITIONS WARRANT IT, OR IF DIRECTED BY C.O.C. PERSONNEL.
6. FILTER FABRIC - WILL BE PLACED OVER THE ENTIRE AREA PRIOR TO PLACING THE STONE.
7. SURFACE WATER - ALL SURFACE WATER FLOWING OR DIVERTED TOWARD CONSTRUCTION ENTRANCES SHALL BE PIPED ACROSS THE ENTRANCE. IF PIPING IS IMPRACTICAL, A MOUNTABLE BERM WITH 5:1 SLOPES SHALL BE PERMITTED.
8. CULVERT PIPE - 12" MINIMUM PIPE IS REQUIRED IF A STORM DITCH OR SWALE EXISTS AT THE PROPOSED ENTRANCE.THE CULVERT PIPE INVERTS SHALL MATCH THE EXISTING DITCH AT BOTH SIDES OF THE ENTRANCE.
9. MAINTENANCE - THE ENTRANCE SHALL BE MAINTAINED IN A CONDITION WHICH WILL PROTECT THE PUBLIC RIGHT-OF-WAY. THIS MAY REQUIRE PERIODIC TOP DRESSING WITH ADDITIONAL STONE AS CONDITIONS DEMAND AND REPAIR AND/OR CLEANOUT OF ANY MEASURES USED TO TRAP SEDIMENT. ALL SEDIMENT SPILLED, DROPPED, WASHED, OR TRACKED ONTO PUBLIC RIGHT-OF-WAY MUST BE REMOVED IMMEDIATELY.
10. WASHING - WHEELS SHALL BE CLEANED TO REMOVE SEDIMENT PRIOR TO ENTRANCE INTO PUBLIC RIGHT-OF-WAY. WHEN WASHING IS REQUIRED, IT SHALL BE DONE ON AN AREA STABILIZED WITH STONE AND WHICH DRAINS INTO AN APPROVED SEDIMENT TRAPPING DEVICE
11. PERIODIC INSPECTION AND NEEDED MAINTENANCE SHALL BE PROVIDED AFTER EACH RAIN.
12. MAINTENANCE OF TRAFFIC SIGNAGE SHALL BE A 48" x 48" CONSTRUCTION ENTRANCE AHEAD, 200' (ADEQUATE SIGHT DISTANCE SHALL BE CONSIDERED) BEFORE THE ENTRANCE ON BOTH SIDES OF THE ROAD OR AS APPROVED BY THE C.O.C. TEMPORARY TRAFFIC CONTROL COORDINATOR. YOU SHALL CALL THE TTCC @ 645-6269 OR 645-5845 BEFORE STARTING THE ENTRANCE WORK.

TEMPORARY CONSTRUCTION ENTRANCE

CITY OF COLUMBUS, OHIO DEPARTMENT OF PUBLIC SERVICE DIVISION OF DESIGN AND CONSTRUCTION	STD DWG 2230
Hassan Zahran	6/1/13
CITY ENGINEER	SHT 1 OF 1

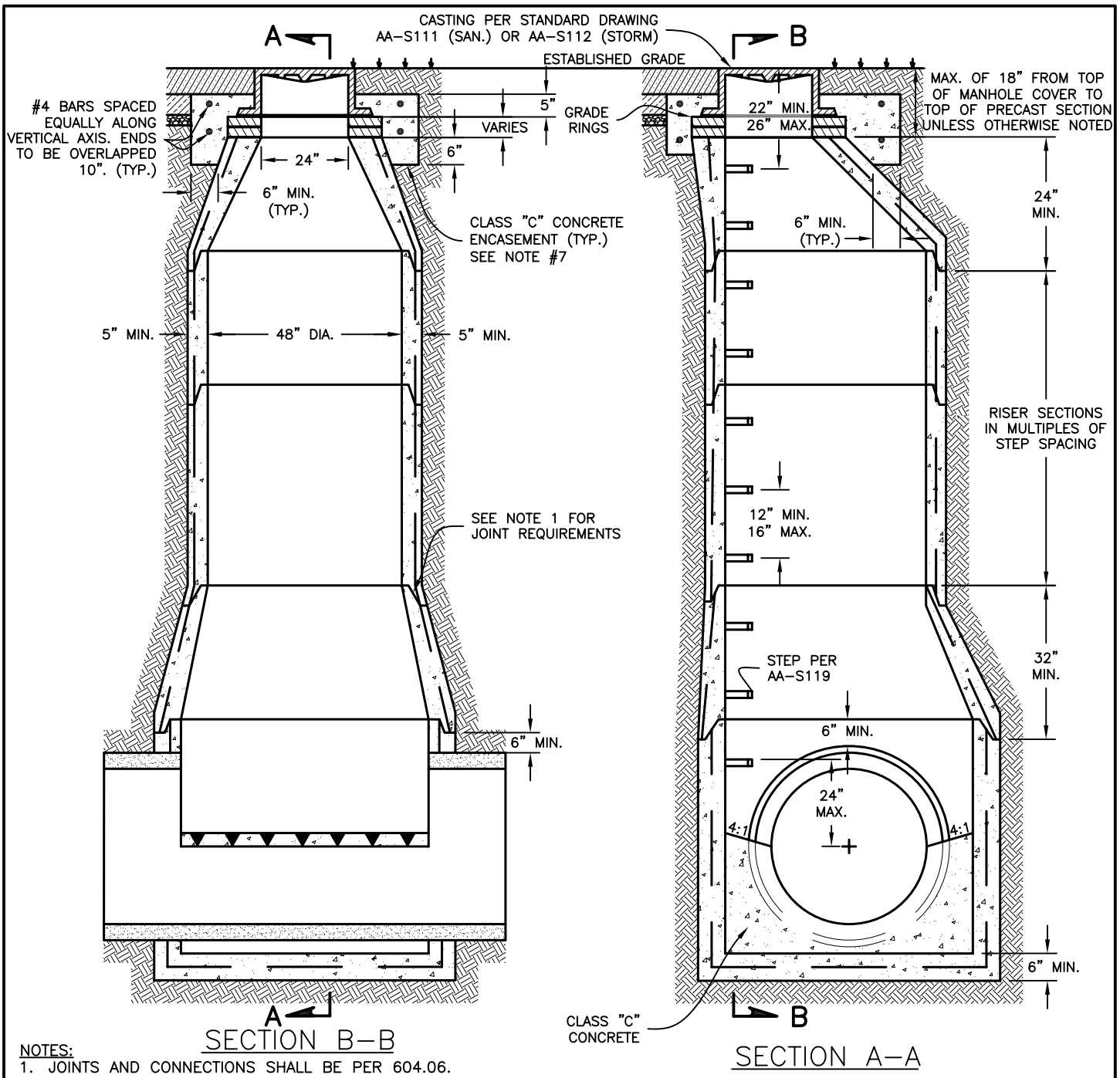

NOTES:

1. JOINTS AND CONNECTIONS SHALL BE PER 604.06.
2. PRECAST MANHOLES SHALL BE N ACCORDANCE WITH ASTM C-478.
3. PRECAST WALLS SHALL HAVE A MIN. THICKNESS OF 5" AND BE SUFFICIENTLY REINFORCED TO PERMIT SHIPPING AND HANDLING WITHOUT DAMAGE.
4. FINISH MANHOLE CHANNEL ACCORDING TO STANDARD DRAWING AA-S117.
5. SEE TABLE FOR MANHOLE BASE DIAMETER.
6. MANHOLES MUST BE SET ON FOUNDATION OF CRUSHED #57 LIMESTONE, 6" MIN. THICKNESS.
7. ONLY SANITARY MANHOLES IN IMPERVIOUS AREAS SHALL REQUIRE A CONCRETE COLLAR, UNLESS OTHERWISE SPECIFIED. SANITARY MANHOLES LOCATED WITHIN PERVIOUS AREAS SHALL REQUIRE A FLEXIBLE CHIMNEY SEAL.

MANHOLE BASE I.D. (INCHES)	MAXIMUM PIPE O.D.	
	STRAIGHT PIPE (INCHES)	RIGHT ANGLE (INCHES)
48	31	25
60	42	32
72	51	38
84	–	44
96	–	50

CITY OF COLUMBUS, OHIO
DEPARTMENT OF PUBLIC UTILITIES
DIVISION OF SEWERAGE & DRAINAGE

SSES MANAGER

TYPE "C" MANHOLE

STANDARD DRAWING
AA-S102

REVISED 12/6/13

PAGE 1 / 1

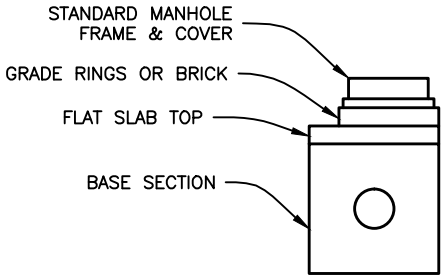

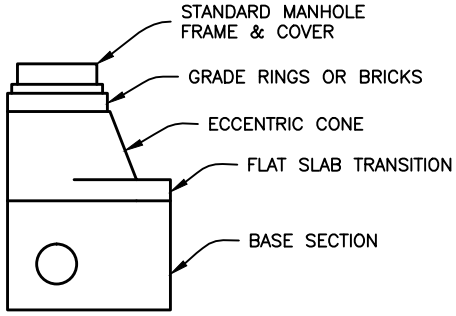

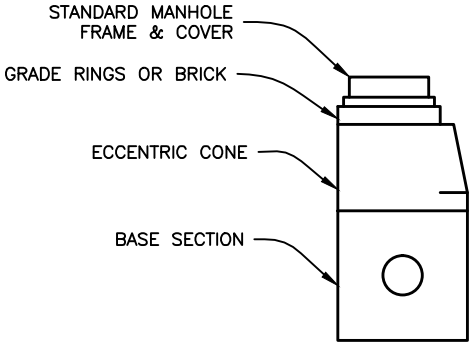

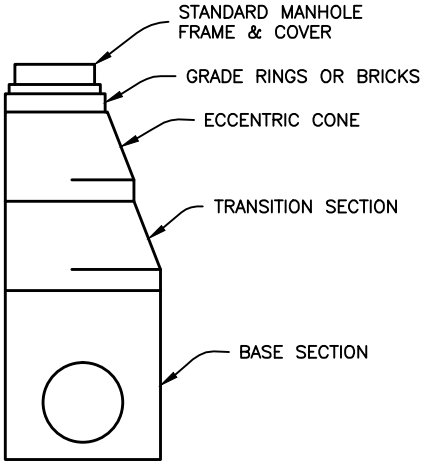

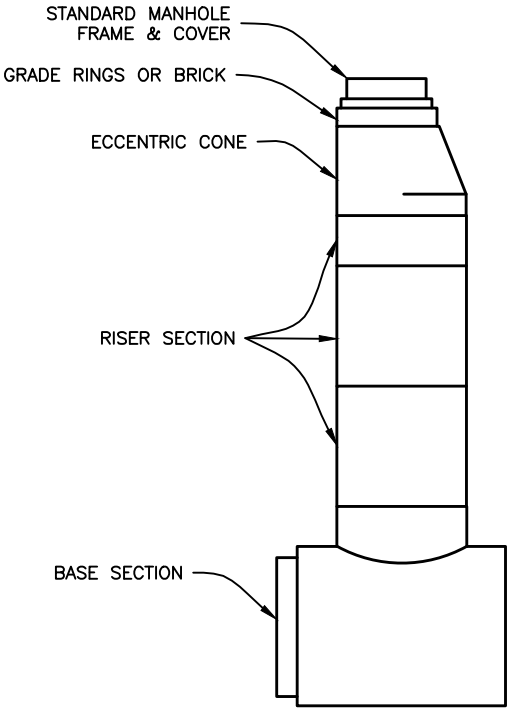

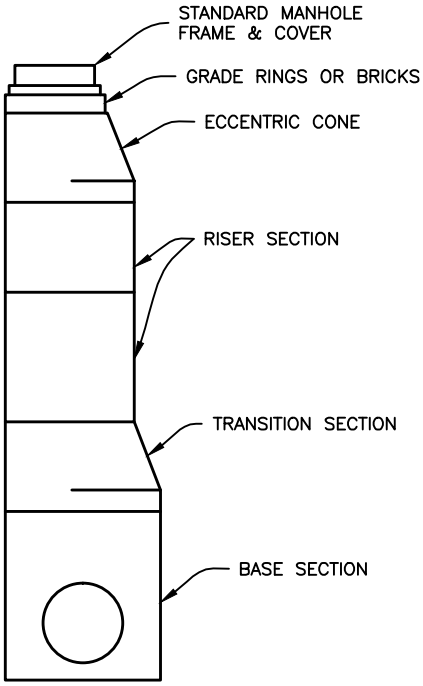

CITY OF COLUMBUS, OHIO DEPARTMENT OF PUBLIC UTILITIES DIVISION OF SEWERAGE & DRAINAGE	TYPICAL ASSEMBLY COMBINATIONS FOR PRECAST MANHOLES	STANDARD DRAWING AA–S106
SSES MANAGER		REVISED 7/9/12
		PAGE 1 / 1

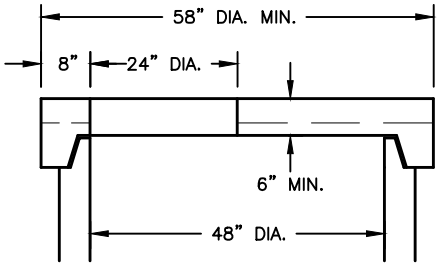

FLAT SLAB TOP
(48" RISERS)

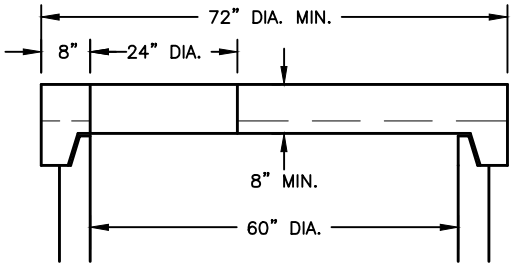

FLAT SLAB TOP
(60" RISERS)

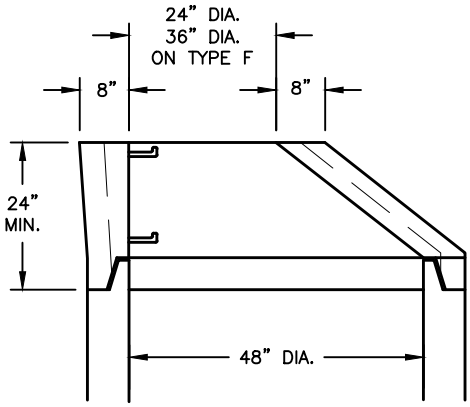

ECCENTRIC CONE TOP
(48" RISERS)

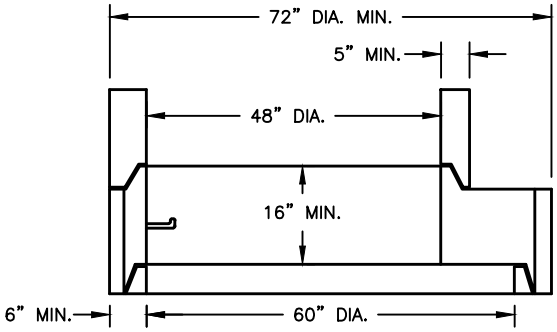

FLAT SLAB TRANSITION
(60" TO 48")

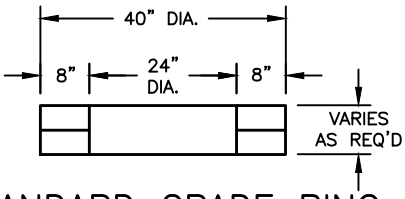

STANDARD GRADE RING

NOTE:
ALL PRE-CAST MANHOLE SECTIONS SHALL BE IN ACCORDANCE WITH ASTM C478.

CITY OF COLUMBUS, OHIO DEPARTMENT OF PUBLIC UTILITIES DIVISION OF SEWERAGE & DRAINAGE	MISCELLANEOUS ITEMS PRECAST MANHOLES	STANDARD DRAWING AA–S107
SSES MANAGER		REVISED 7/9/12
		PAGE 1 / 1

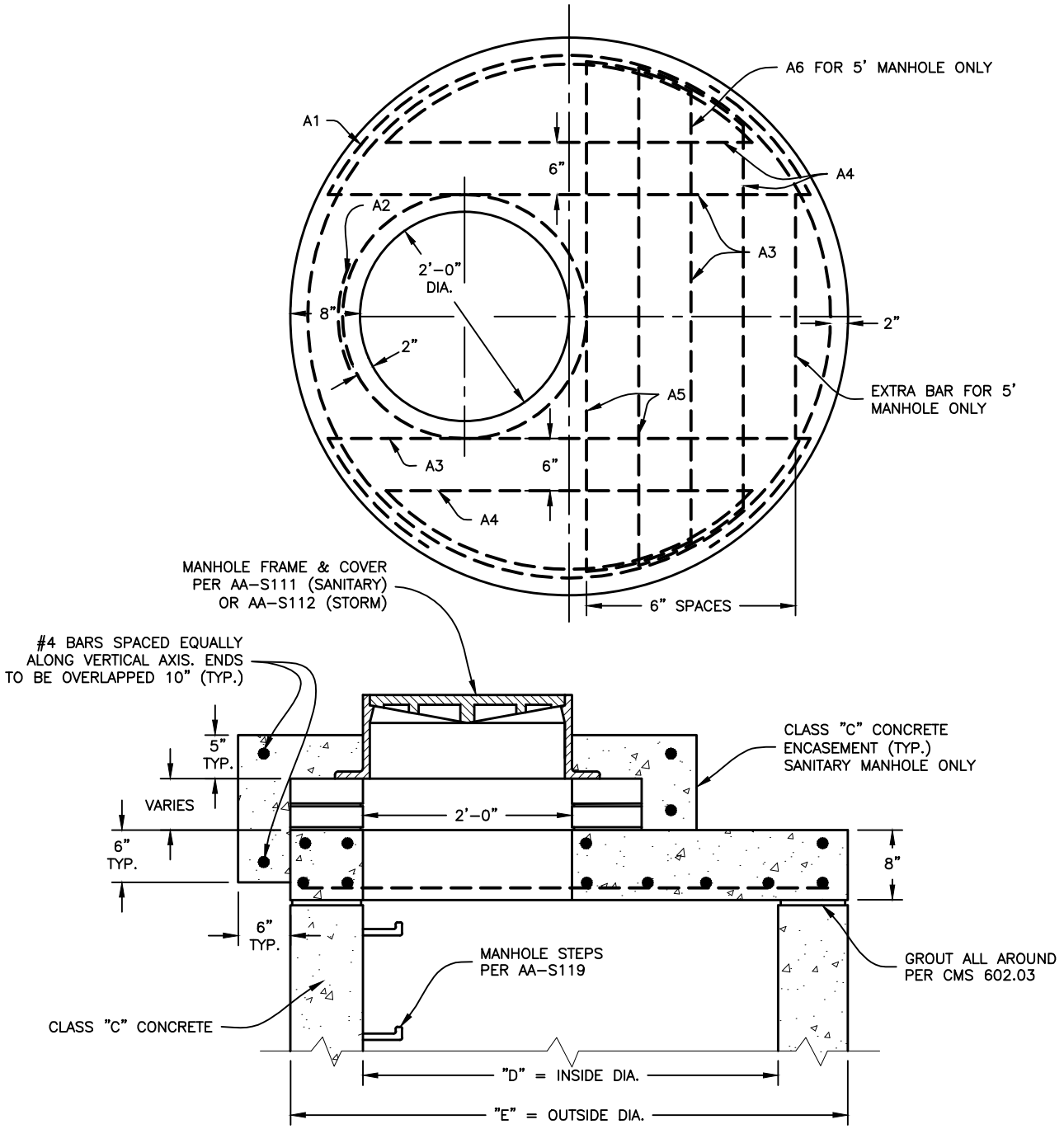

NOTES:

1. 2" MIN. COVER ON ALL REINFORCEMENT STEEL.
2. ALL REINFORCING STEEL SHALL MEET CMS 709.2 SPECIFICATIONS.

DIMENSIONS AND QUANTITIES FOR TOP SLAB

M.H. DIA. "D"	M.H. DIA. "E"	#4 STEEL REINFORCEMENT BARS														WEIGHT STEEL LBS.	APPROXIMATE CONCRETE VOLUME CU. YD.
		A1			A2			A3		A4		A5		A6			
		NO.	LENGTH	RADIUS	NO.	LENGTH	RADIUS	NO.	LENGTH	NO.	LENGTH	NO.	LENGTH	NO.	LENGTH		
4'-0"	4'-10"	2	17'-5"	2'-3"	2	9'-0"	1'-2"	3	5'-11"	3	5'-3"	2	6'-6"			66	0.38
5'-0"	6'-0"	2	20'-6"	2'-10"	2	9'-0"	1'-2"	3	7'-2"	3	6'-8"	2	7'-8"	1	7'-6"	82	0.63

CITY OF COLUMBUS, OHIO
DEPARTMENT OF PUBLIC UTILITIES
DIVISION OF SEWERAGE & DRAINAGE

SSES MANAGER

CAST-IN-PLACE
CONCRETE TOP SLAB
FOR SHALLOW
MANHOLES

STANDARD DRAWING
AA-S108

REVISED 7/9/12

PAGE 1 / 1

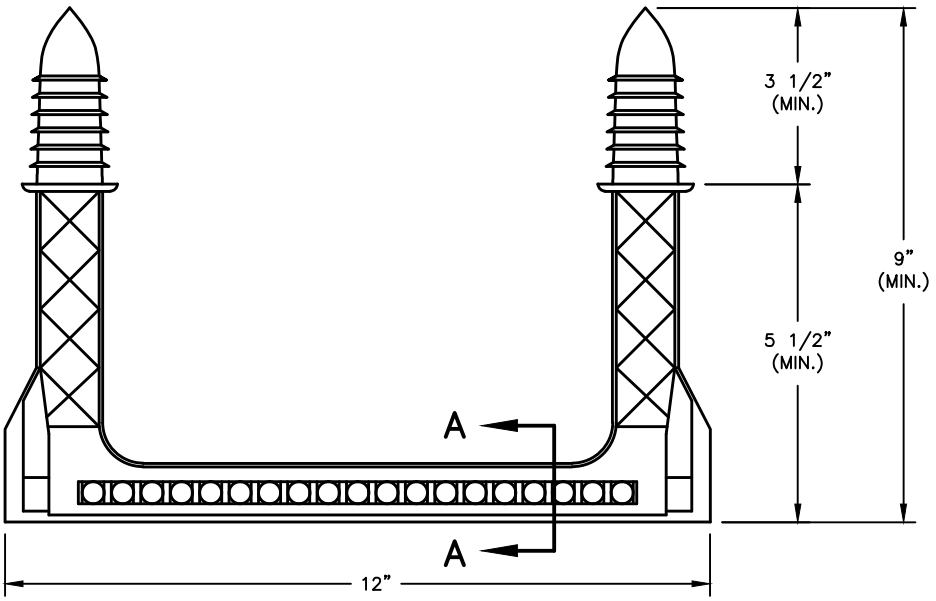

TOP VIEW

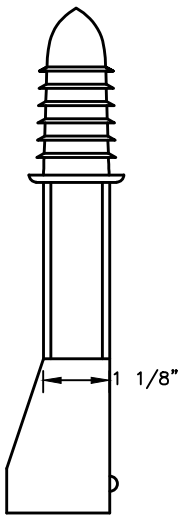

SIDE VIEW

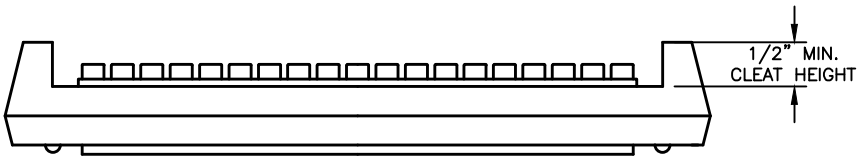

FRONT VIEW

NOTES:

1. STEPS SHALL MEET THE REQUIREMENTS OF ASTM C-478, AND SHALL BE INSTALLED WITH A UNIFORM VERTICAL SPACING OF 12" TO 16"

2. STEPS INSTALLED IN EXISTING STRUCTURES SHALL BE SET IN A QUICK SETTING NON-SHRINK EPOXY.

3. STEPS SHALL CONFORM TO MATERIAL REQUIREMENTS OF CMS 711.31. ALL STEPS SHALL HAVE A DEPRESSED TREAD OR 1/2" MINIMUM CLEAT HEIGHT AT THE ENDS.

4. THE ENGINEER MAY REQUIRE CONTRACTOR TO TEST LOAD A MAXIMUM OF ONE STEP PER MANHOLE TO A PROOF LOAD OF 400LBS. IN DIRECT PULL. THE EQUIPMENT AND METHOD USED SHALL MEET THE APPROVAL OF THE ENGINEER. IF THE SELECTED STEP FAILS THE PULL OUT TEST, THE REMAINING STEPS IN THAT MANHOLE SHALL ALSO BE TESTED. ALL STEPS NOT PASSING THE PULLOUT TEST SHALL BE REMOVED AND A NEW STEP INSTALLED AND TESTED TO THE SATISFACTION OF THE ENGINEER. COST OF TESTING SHALL BE INCIDENTAL TO THE UNIT PRICE BID FOR THE MANHOLE.

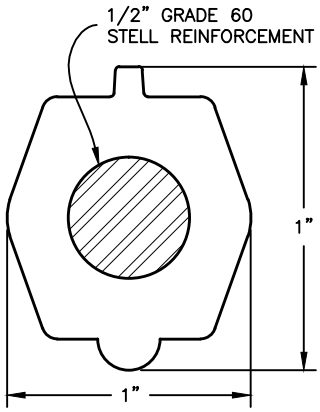

SECTION A-A

CITY OF COLUMBUS, OHIO DEPARTMENT OF PUBLIC UTILITIES DIVISION OF SEWERAGE & DRAINAGE	MANHOLE STEP	STANDARD DRAWING AA-S119
SSES MANAGER		REVISED 7/9/12
		PAGE 1 / 1

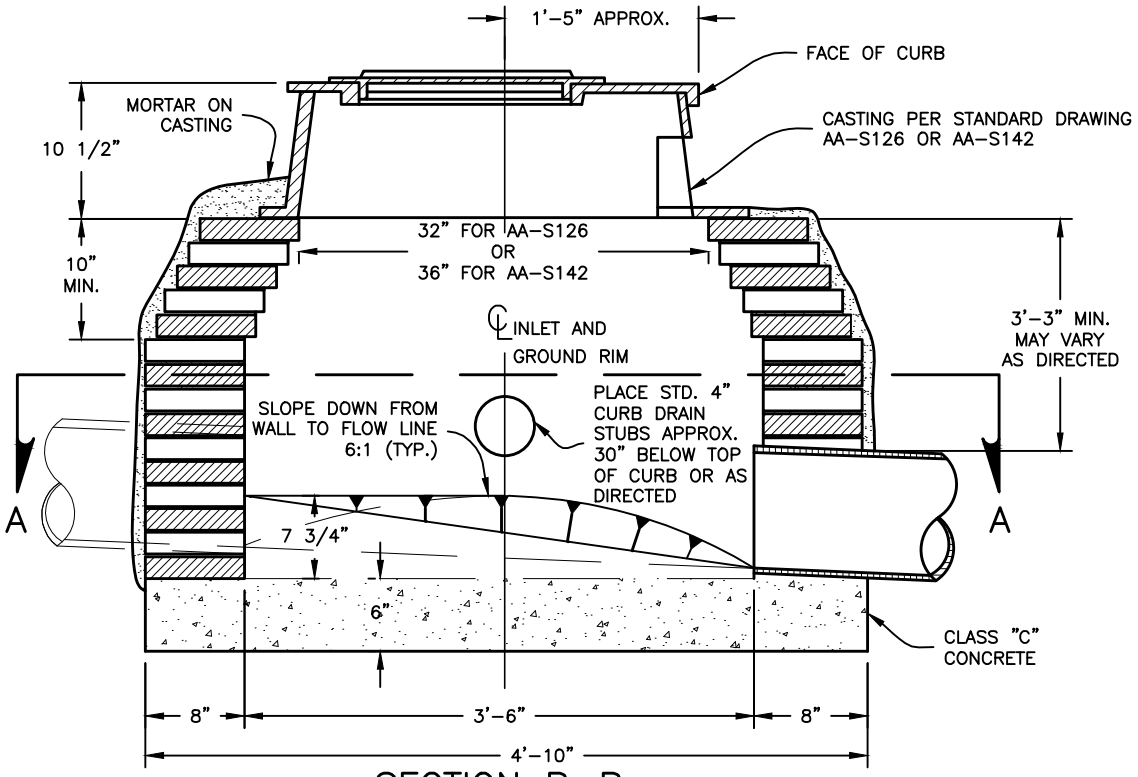

SECTION B-B

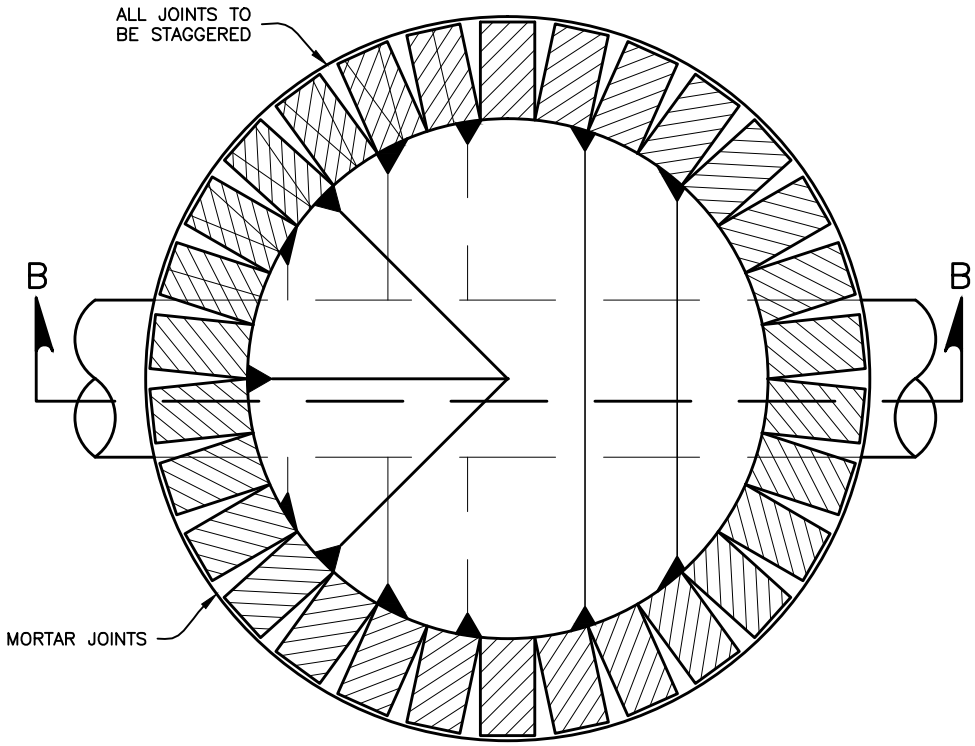

SECTION A-A

NOTES:

1. PIPES DRAINING INTO INLET SHALL BE PLACED 2" ABOVE ELEVATION OF OUTLET PIPE.
2. MAXIMUM SIZE OF PIPE TO BE USED WITH INLET WILL BE 24".
3. OUTLET PIPE TO BE PLACED AT FRONT OR BACK OF INLET.
4. IF PIPE IS PLACED UNDER PAVEMENT AND THE COVER FROM TOP OF PIPE TO BOTTOM OF PAVEMENT IS 30" OR LESS, CLASS "A" CONCRETE ENCASEMENT WILL BE REQUIRED. PER CMS 901.12.
5. INLETS SHALL BE BUILT OF BRICK, PRECAST SOLID CONCRETE BLOCKS, CAST IN PLACE CONCRETE OR PRE-CAST CONCRETE.
6. PRE-CAST WALLS SHALL HAVE A MIN. THICKNESS OF 5" AND BE SUFFICIENTLY REINFORCED TO PERMIT SHIPPING AND HANDLING WITHOUT DAMAGE.
7. PRECAST INLETS SHALL BE IN ACCORDANCE WITH ASTM C913.

CITY OF COLUMBUS, OHIO DEPARTMENT OF PUBLIC UTILITIES DIVISION OF SEWERAGE & DRAINAGE	CURB INLET	STANDARD DRAWING AA-S120
SSES MANAGER		REVISED 7/9/12
		PAGE 1 / 1

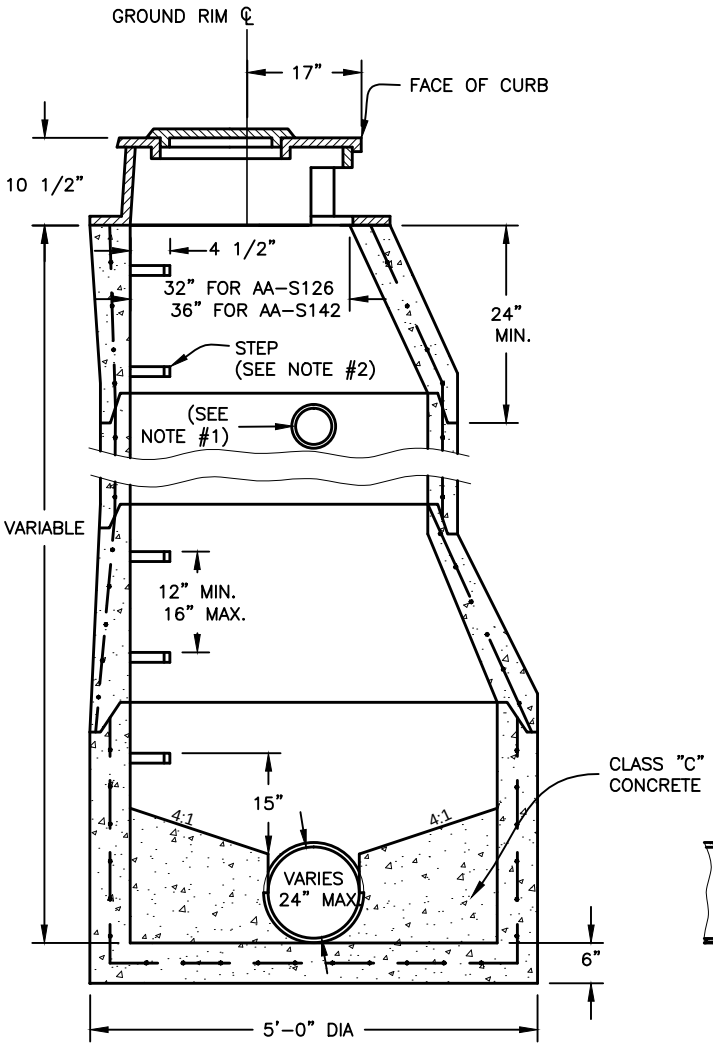

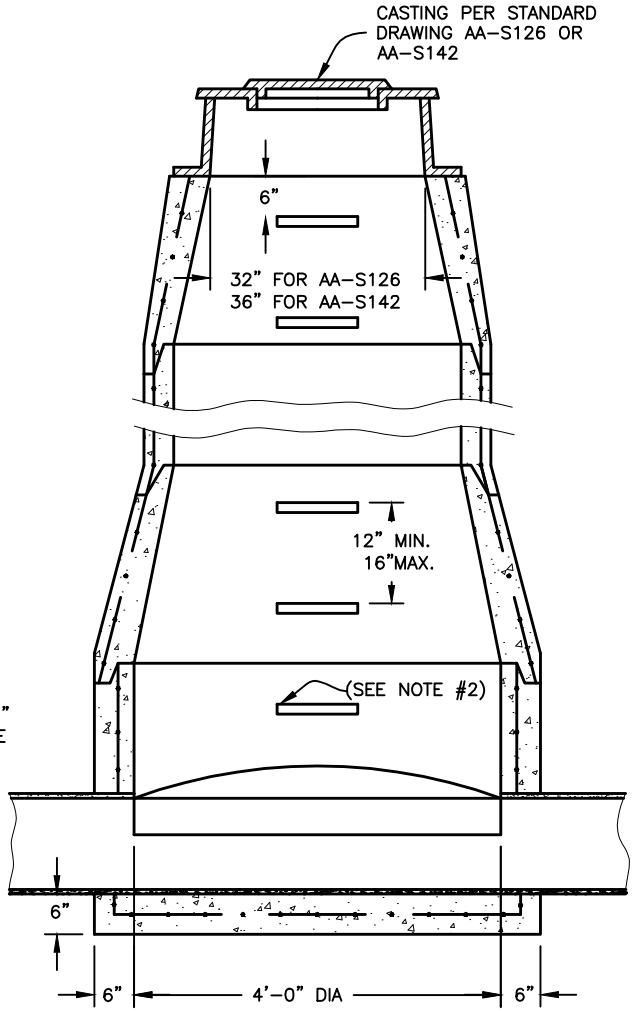

NOTES:

1. PLACE STANDARD 4" CURB DRAIN STUBS 30" BELOW THE TOP OF THE CURB OR AS DIRECTED.
2. INSTALL STANDARD STEPS PER AA-S119.
3. PRE-CAST WALLS SHALL HAVE A 5" MIN. THICKNESS & BE SUFFICIENTLY REINFORCED TO PERMIT SHIPPING & HANDLING WITHOUT DAMAGE.
4. MANHOLE SHALL BE IN ACCORDANCE WITH ASTM C478.

CITY OF COLUMBUS, OHIO DEPARTMENT OF PUBLIC UTILITIES DIVISION OF SEWERAGE & DRAINAGE	CURB INLET MANHOLE	STANDARD DRAWING AA-S121
John G Newsome SSES MANAGER		REVISED 7/9/12
		PAGE 1/1

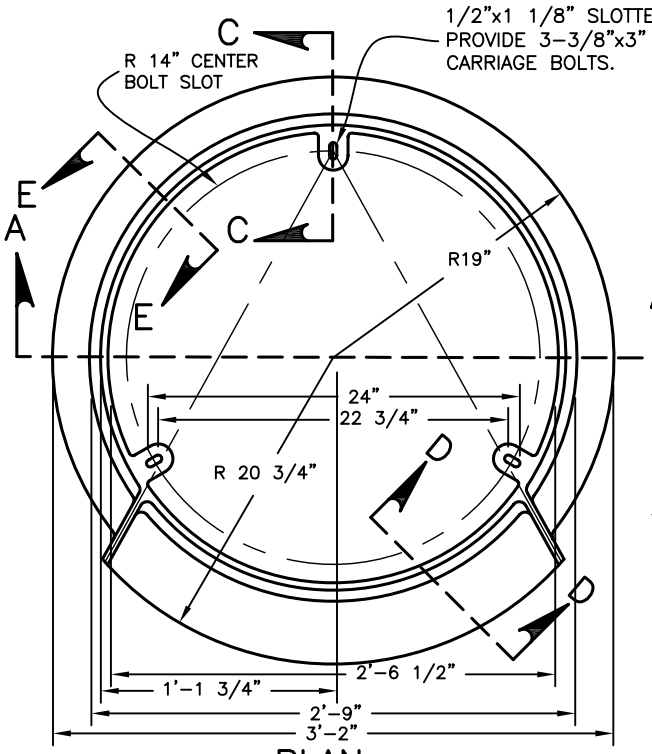

PLAN

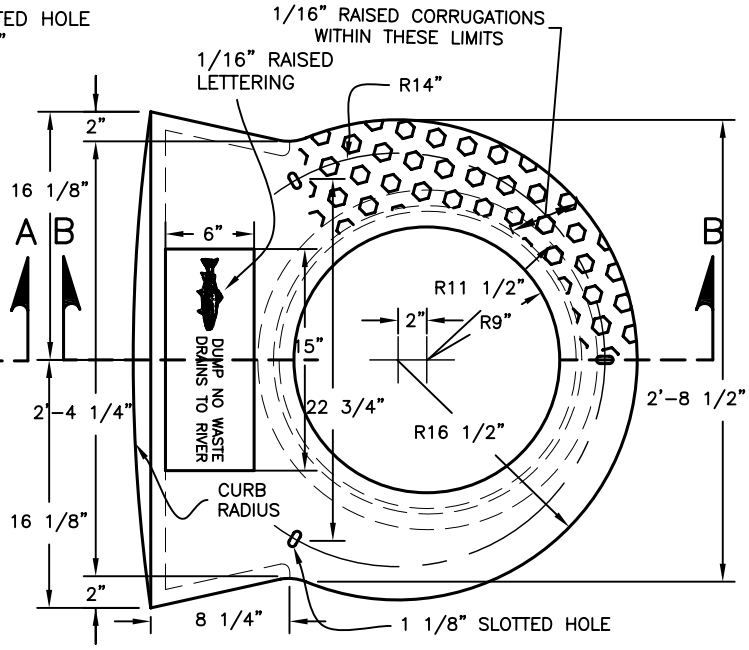

PLAN

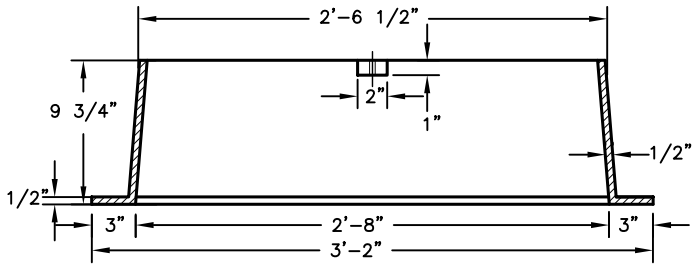

SECTION A-A

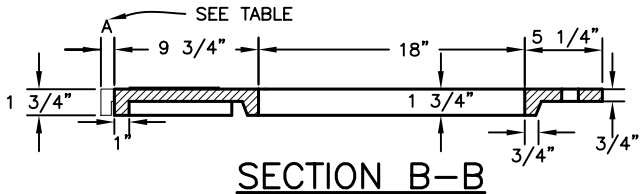

SECTION B-B

APPROX. WEIGHTS

FRAME = 214LBS.
TOP = 163LBS.
LID = 50LBS.

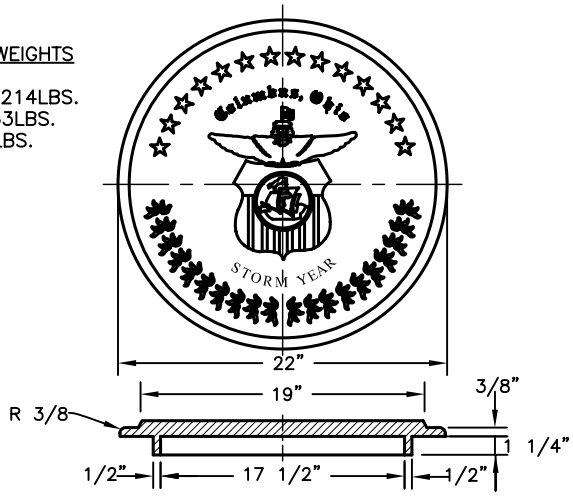

LID

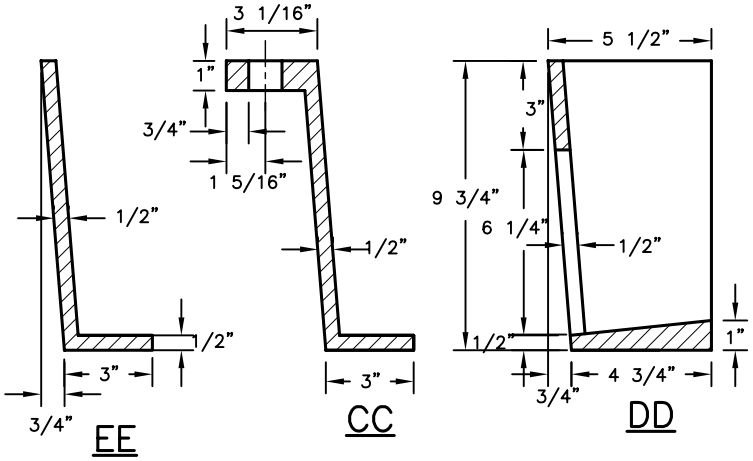

SECTIONS

NOTES:

1. FRAMES, GRATES, AND COVERS SHALL MEET REQUIREMENTS OF 604.02.
2. FOUNDRY NAME SHALL BE CAST ON THE UNEXPOSED SURFACE OF ALL CASTINGS.

PRE-APPROVED CASTINGS:

EJ NO. - 7530
NEENAH NO. - 3256

DIMENSION "A" TABLE	
CURB	"A"
STRAIGHT	0.00"
20' RAD.	0.54"
8' RAD.	1.36"

CITY OF COLUMBUS, OHIO
DEPARTMENT OF PUBLIC UTILITIES
DIVISION OF SEWERAGE & DRAINAGE

SSES MANAGER

CASTINGS
FOR
CURB INLETS

STANDARD DRAWING
AA-S126

REVISED 12/6/13

PAGE 1 / 1

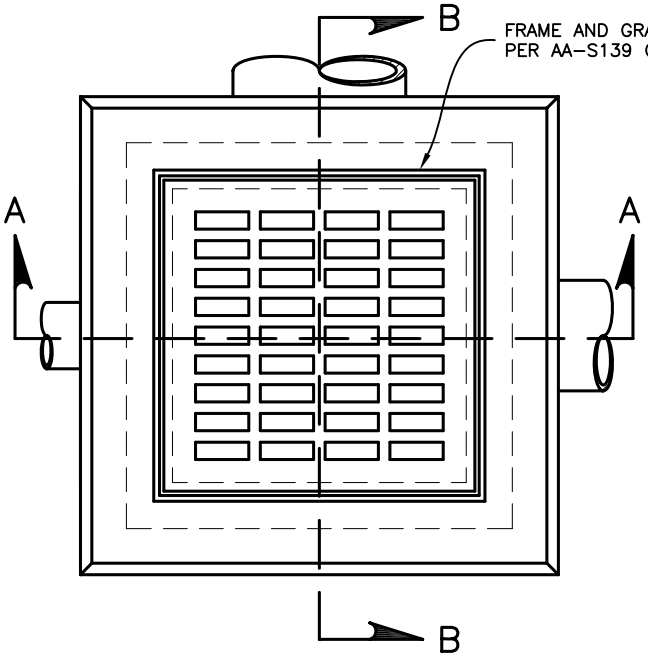

GRATE-PLAN VIEW

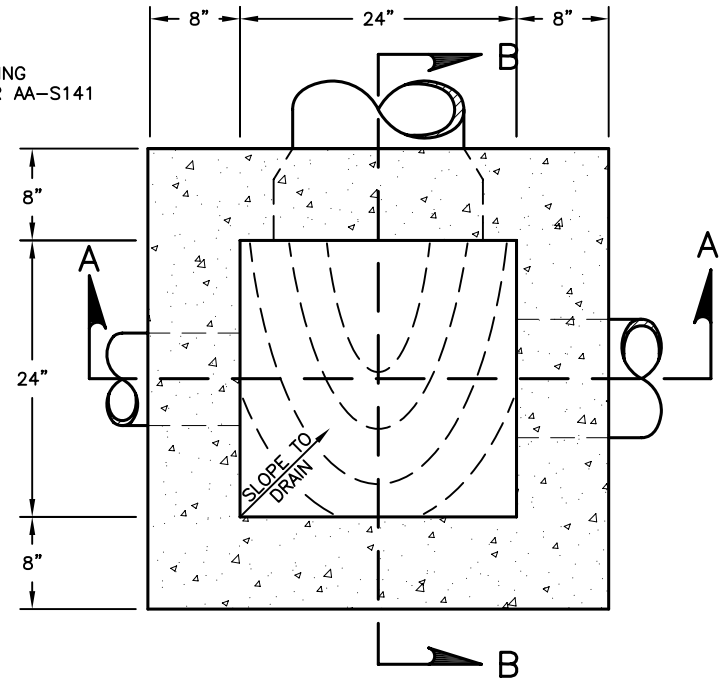

SECTION C-C

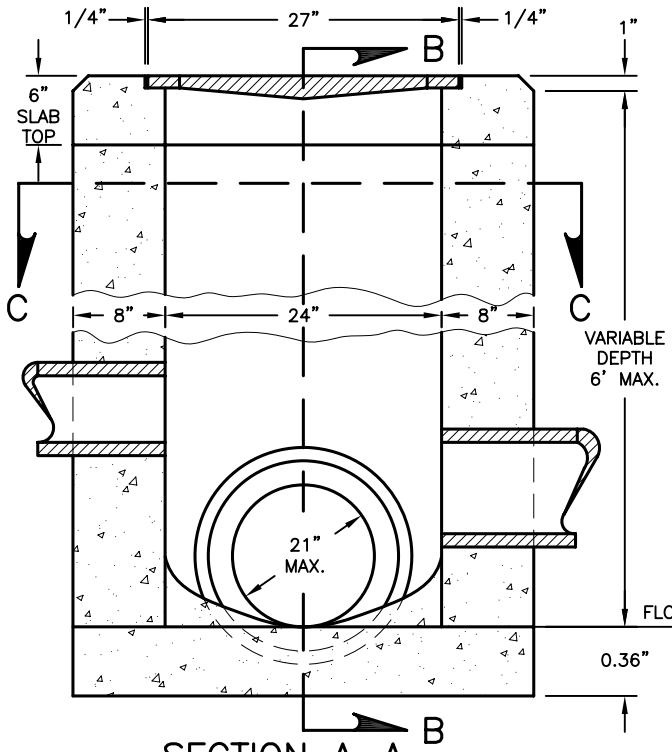

SECTION A-A

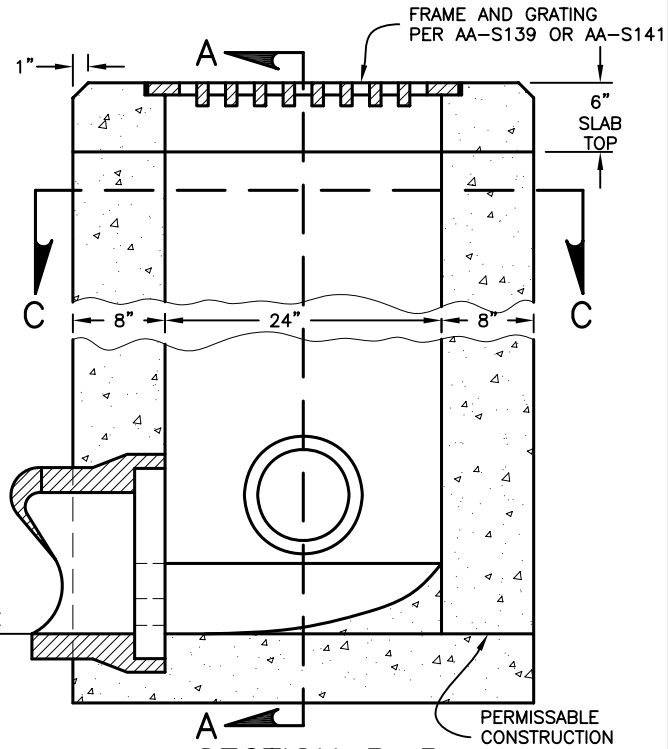

SECTION B-B

NOTES:

1. WALLS: CAST-IN-PLACE UNITS HAVE A NOMINAL THICKNESS OF 8" AND MIN. THICKNESS OF 6". PRECAST WALLS SHALL HAVE A MIN. THICKNESS OF 6" AND BE REINFORCED SUFFICIENTLY TO PERMIT SHIPPING AND HANDLING WITHOUT DAMAGE.

2. CONCRETE: CAST-IN-PLACE CONC. IS TO BE CLASS "C". PRECAST CONC. SHALL MEET REQUIREMENTS OF CMS 706.13 AND BE MARKED WITH CATCH BASIN NUMBER.

3. PRECAST BASE: IF A PRECAST BASE IS USED IT SHALL BE PLACED DEEP ENOUGH SO THAT THE TOP 6" CAN BE ADJUSTED TO PROVIDE THE GRATE ELEVATION SPECIFIED IN PLANS OR TO ALLOW POSITIVE DRAINAGE.

4. MINIMUM DEPTH: MINIMUM DEPTH OF AA-S133A SHALL BE THE OUTSIDE
DIA. (O.D.) OF THE OUTLET PIPE PLUS 4".

CITY OF COLUMBUS, OHIO DEPARTMENT OF PUBLIC UTILITIES DIVISION OF SEWERAGE & DRAINAGE	STANDARD CATCH BASIN (21" DIAMETER AND SMALLER PIPE)	STANDARD DRAWING AA-S133A
SSES MANAGER		REVISED 12/6/13
		PAGE 1 / 1

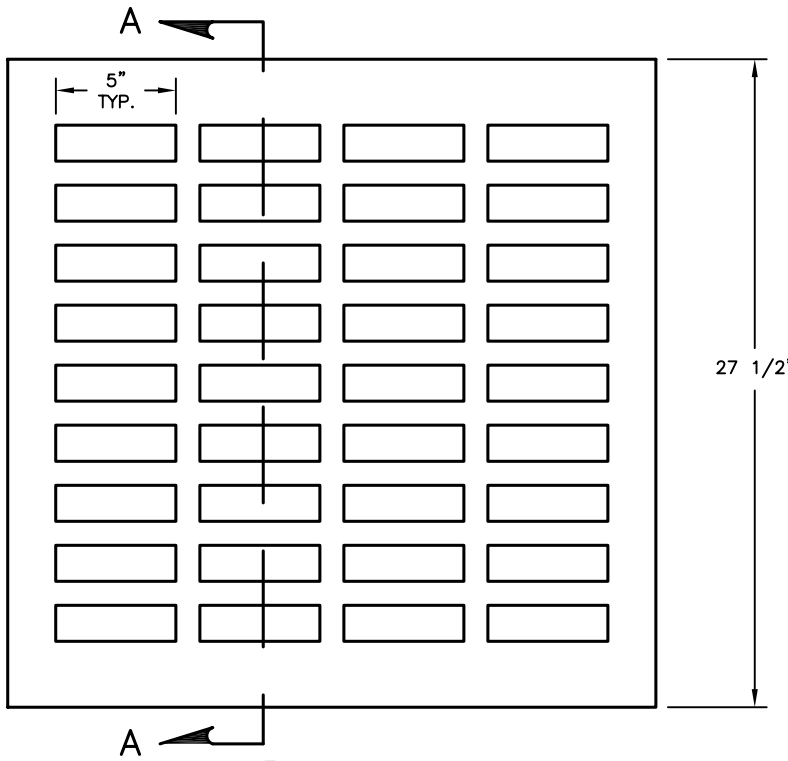

PLAN

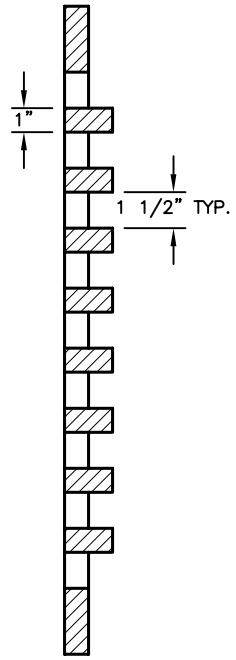

SECTION A–A

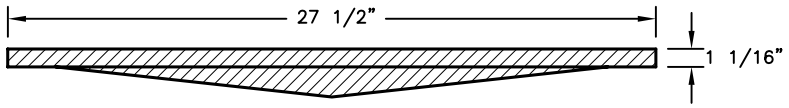

SECTION B–B

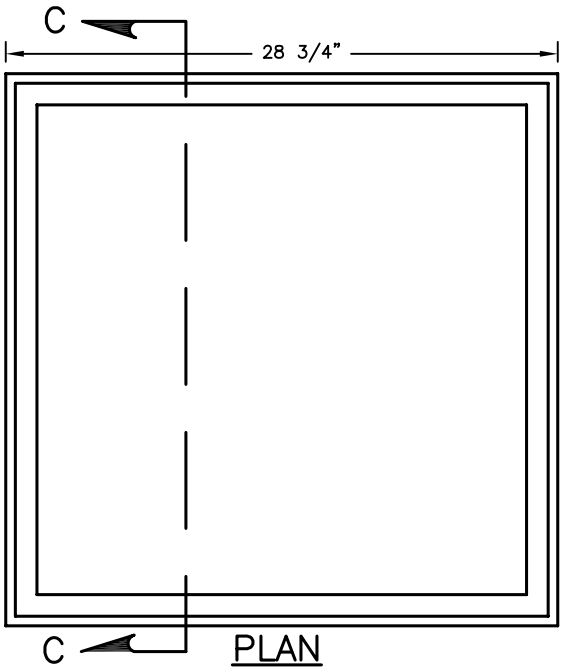

PLAN
GRATING FRAME

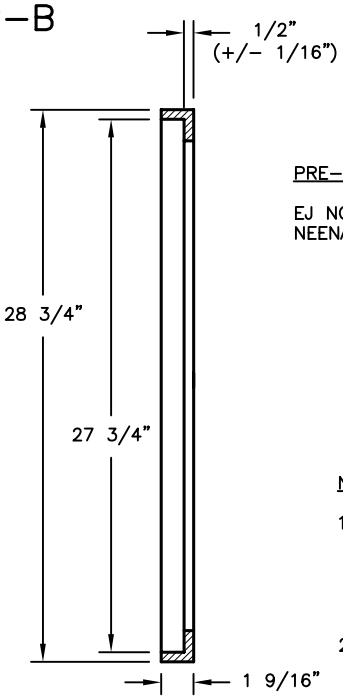

SECTION C–C

PRE–APPROVED CASTINGS:

EJ NO. – 5110M4, 5110Z1
NEENAH NO. – 4859–C, 4859–S, 4871, 4871–3001

NOTES:

1. FRAMES, GRATES, AND COVERS SHALL MEET REQUIREMENTS OF 604.02. DESIGN SHALL BE THE SAME AND EQUALLY AS STRONG AS SHOWN. ALL GRATING EDGES TO HAVE 1/4" RADIUS.
2. ANGLE FRAME FOR STANDARD CATCH BASIN WITH 24" SIDE INLETS.
3. APPROXIMATE WEIGHT OF GRATE = 120 LBS.
4. APPROXIMATE WEIGHT OF FRAME = 40 LBS.

CITY OF COLUMBUS, OHIO DEPARTMENT OF PUBLIC UTILITIES DIVISION OF SEWERAGE & DRAINAGE	LIGHT DUTY GRATE AND ANGLE FRAME FOR STANDARD CATCH BASIN	STANDARD DRAWING AA–S139
SSES MANAGER		REVISED 12/6/13
		PAGE 1 / 1

NOTE:

1. FRAMES, GRATES AND COVERS, SHALL MEET REQUIREMENTS OF 604.02 & AASHTO M306

2. CURB ADJUSTABLE FROM 3 1/4" TO 9".

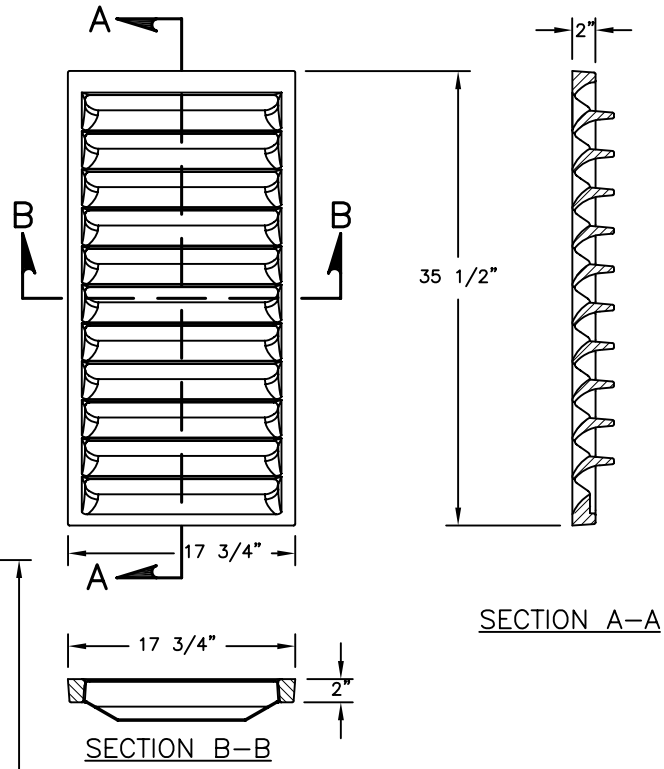

CURB GRATING

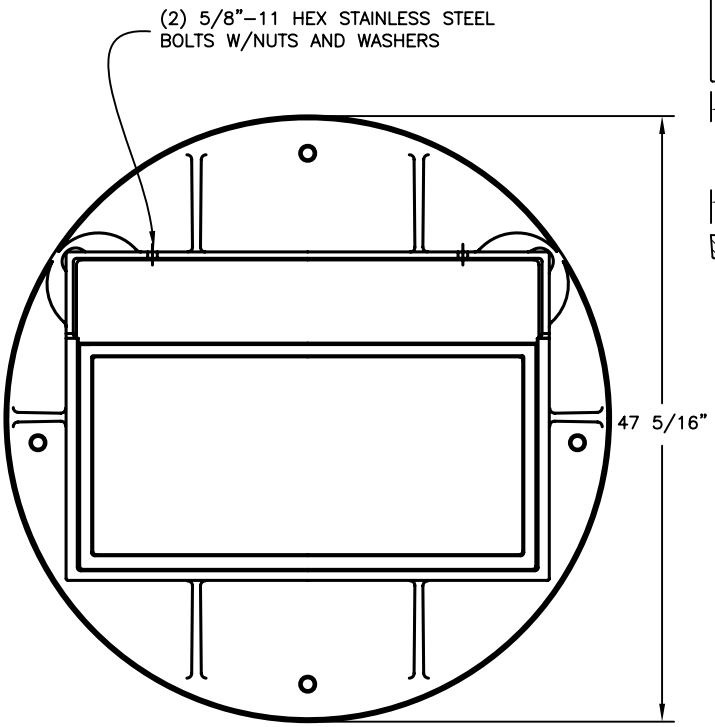

PLAN

PRE–APPROVED CASTINGS:

EJ NO. – 7360Z WITH 7030M4 GRATE & 7030T6 BACK
NEENAH NO. – 3246–F WITH TYPE V GRATE

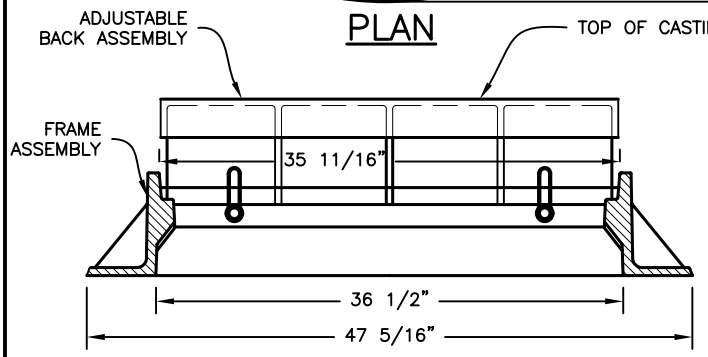

ELEVATION

FRAME ASSEMBLY W/ADUST. BACK

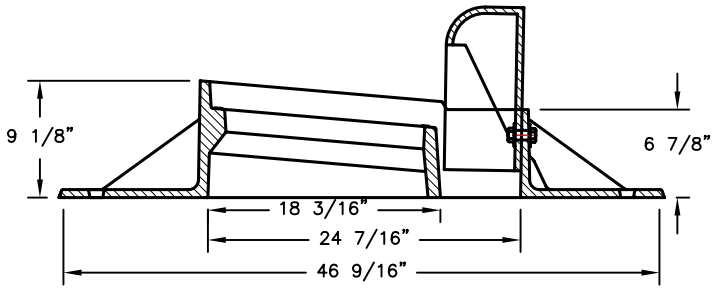

SECTION

CITY OF COLUMBUS, OHIO DEPARTMENT OF PUBLIC UTILITIES DIVISION OF SEWERAGE & DRAINAGE	CURB & GUTTER INLET FOR CURB INLET MANHOLES	STANDARD DRAWING AA–S142
SSES MANAGER		REVISED 12/6/13
		PAGE 1 / 1

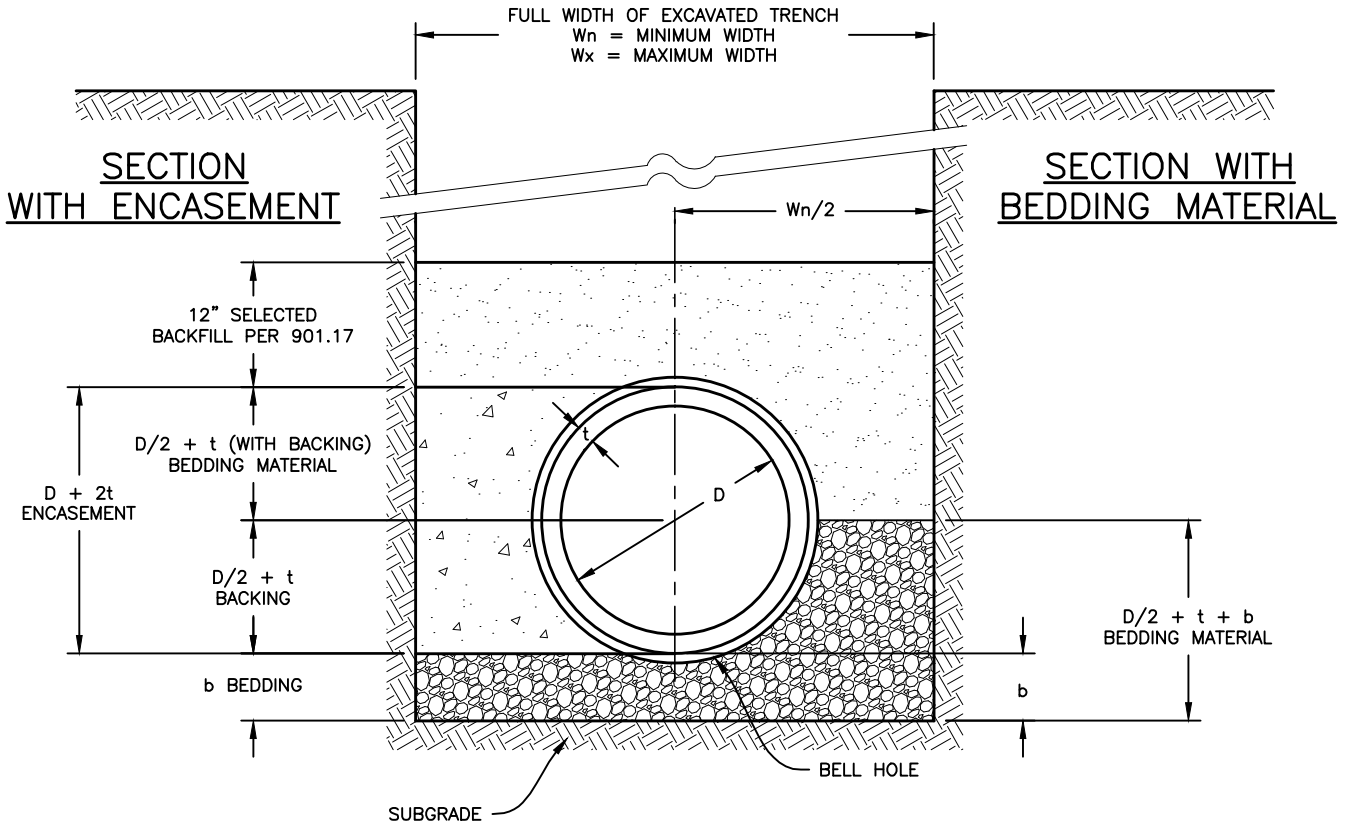

SMALL DIAMETERS
b = 4"

D	Wn	Wx
6"	24"	48"
8"	27"	48"
10"	30"	48"
12"	32"	48"
15"	36"	50"
18"	40"	53"
21"	44"	57"
24"	48"	60"
27"	52"	64"

MID DIAMETERS
b = 6"

D	Wn	Wx
30"	57"	67"
33"	61"	71"
36"	64"	74"
42"	71"	81"
48"	78"	88"
54"	87"	95"
60"	96"	102"
66"	105"	127"

LARGE DIAMETERS
b = 6"

D	Wn	Wx
72"	116"	134"
78"	123"	141"
84"	130"	148"
90"	136"	155"
96"	143"	162"
102"	151"	169"
108"	160"	176"

NOTES:

1. SECTIONS SYMETRICAL ABOUT ℄.
2. PIPE DIMENSIONS ON CHART ARE EXPRESSED IN INCHES.
3. FOR SANITARY SEWER CONSTRUCTION TRENCH DAMS ARE REQUIRED AS SPECIFIED UNDER 901.11.
4. BACKING AND ENCASEMENT TO BE CLASS "A" CONCRETE, ITEM 905.
5. PAYMENT FOR CONCRETE BACKING AND ENCASEMENT SHALL BE BASED ON MINIMUM TRENCH WIDTH (Wn).

CITY OF COLUMBUS, OHIO
DEPARTMENT OF PUBLIC UTILITIES
DIVISION OF SEWERAGE & DRAINAGE

SSES MANAGER

TYPE I BEDDING FOR RIGID SEWER PIPE 6" TO 108" DIAMETER

STANDARD DRAWING
AA-S151

REVISED 7/9/12

PAGE 1 / 1

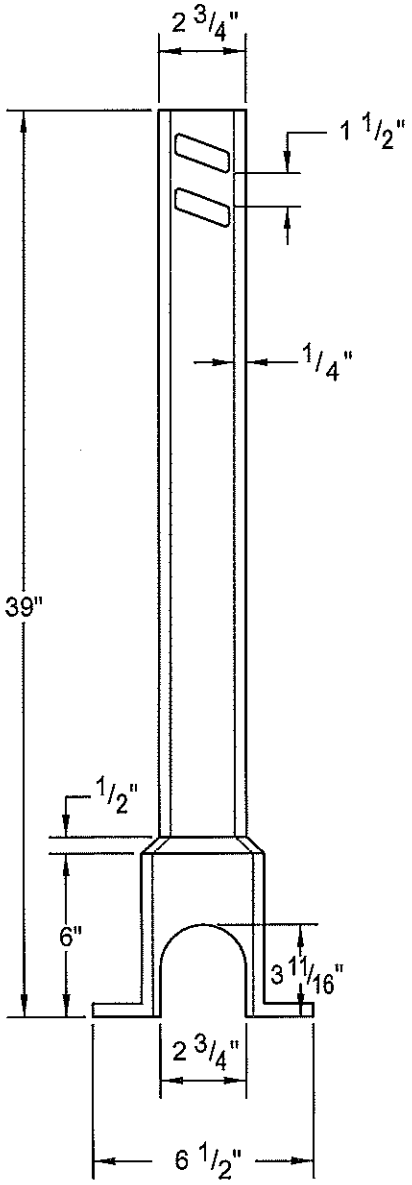

BOTTOM
(22 Pounds)

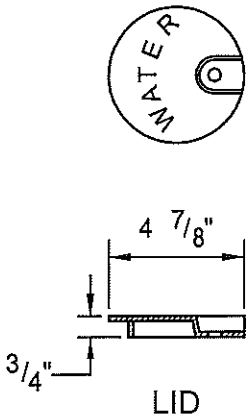

LID

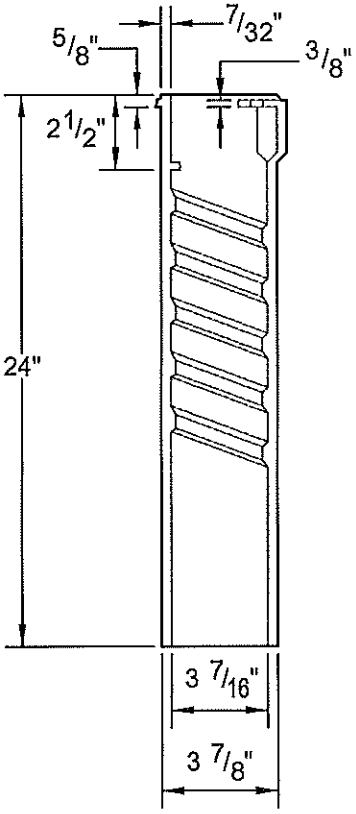

TOP
(19 Pounds)

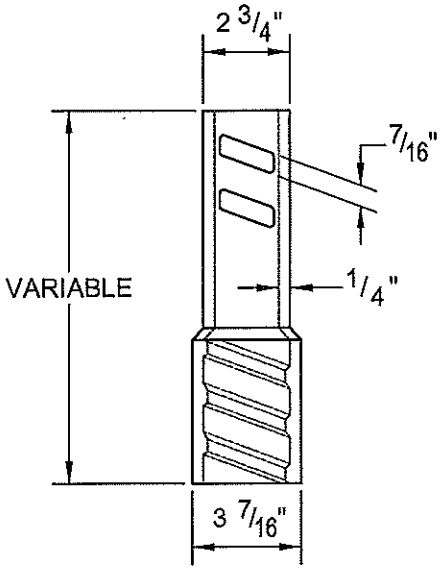

EXTENSION
(9" - 7 Pounds)
(16" - 12 Pounds)
(28" - 17 Pounds)
(30" - 19 Pounds)

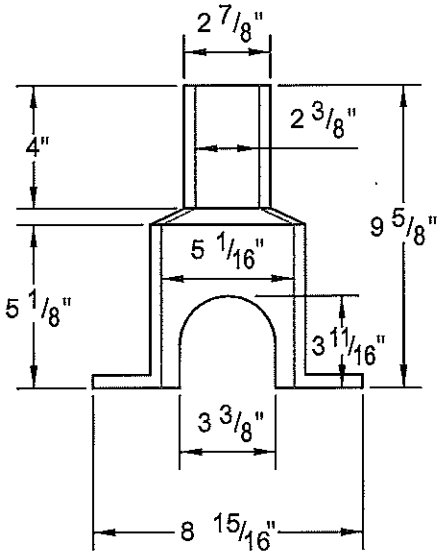

ENLARGED BASE
(8 Pounds)

CITY OF COLUMBUS DEPARTMENT OF PUBLIC UTILITIES DIVISION OF WATER	STANDARD DETAIL TYPICAL CURB BOX	L-1001
APPROVED: R C Westerfield 5-14-13 ADMINISTRATOR DATE		

L-1001.Dwg Revision Date: 1/2/13

MATERIAL SPECIFICATIONS PER AWWA C-105 LINEAR LOW-DENSITY POLYETHYLENE FILM WITH MIN. 8 MIL. THICKNESS, MADE FROM VIRGIN POLYETHYLENE ONLY.

	TUBE SIZE REQUIRED											
PIPE DIAMETER	3"	4"	6"	8"	10"	12"	16"	20"	24"	30"	36"	42"
MIN. FLAT TUBE WIDTH (INCHES)	14	14	16	20	24	27	34	41	54	67	81	81

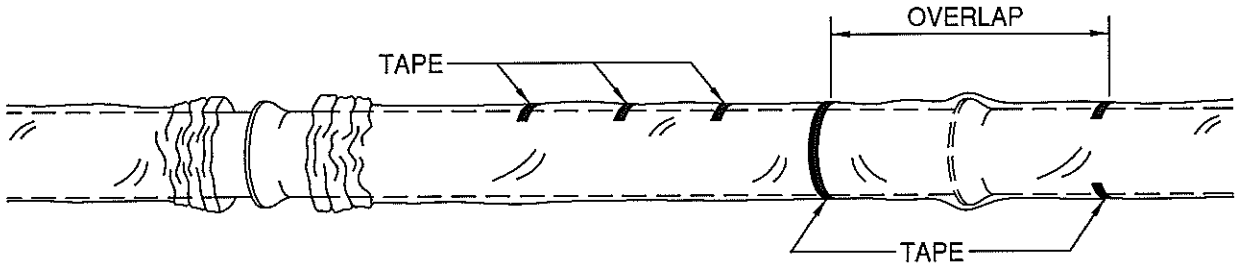

THE FOLLOWING METHOD ILLUSTRATES THE PROCEDURE FOR APPLYING POLYETHYLENE:

CUT POLYETHYLENE TUBE TO A LENGTH APPROXIMATELY TWO FEET LONGER THAN THE LENGTH OF THE PIPE SECTION, SLIP THE TUBE AROUND THE PIPE, CENTERING IT TO PROVIDE A ONE-FOOT OVERLAP ON EACH ADJACENT PIPE SECTION, AND BUNCHING IT ACCORDION FASHION LENGTHWISE UNTIL IT CLEARS THE PIPE ENDS.

LOWER THE PIPE INTO THE TRENCH AND MAKE THE PIPE JOINT WITH THE PRECEDING SECTION OF PIPE. A SHALLOW BELL HOLE MUST BE MADE AT THE JOINTS TO FACILITATE INSTALLATION OF THE POLYETHYLENE TUBE.

AFTER ASSEMBLING THE PIPE JOINT, MAKE THE OVERLAP OF THE POLYETHYLENE TUBE, PULL THE BUNCHED POLYETHYLENE FROM THE PRECEDING LENGTH OF PIPE, SLIP IT OVER THE END OF THE NEW LENGTH OF PIPE AND SECURE IT IN PLACE. THEN SLIP THE END OF THE POLYETHYLENE FROM THE NEW PIPE SECTION OVER THE END OF THE PRECEDING LENGTH OF PIPE, SECURE THE OVERLAP IN PLACE, TAKE UP THE SLACK WIDTH TO MAKE IT SNUG, BUT NOT TOO TIGHT, FIT ALONG THIS BARREL OF PIPE, SECURING THE FOLD AT QUARTER POINTS.

REPAIR ANY RIPS, PUNCTURES, OR OTHER DAMAGE TO THE POLYETHYLENE WITH ADHESIVE TAPE OR WITH A SHORT LENGTH OF THE POLYETHYLENE TUBE CUT OPEN, WRAPPED AROUND THE PIPE, AND SECURED IN PLACE. PROCEED WITH INSTALLATION OF THE NEXT SECTION OF PIPE IN THE SAME MANNER.

PIPE-SHAPED APPURTENANCES

BENDS, REDUCERS, OFFSETS AND OTHER PIPE-SHAPED APPURTENANCES SHALL BE COVERED IN THE SAME MANNER AS THE PIPE.

JUNCTIONS BETWEEN WRAPPED AND UNWRAPPED PIPE

WHERE POLYETHYLENE WRAPPED PIPE JOINS A PIPE WHICH IS NOT WRAPPED, EXTEND THE POLYETHYLENE TUBE TO COVER THE UNWRAPPED PIPE A DISTANCE OF AT LEAST TWO FEET. SECURE THE END WITH CIRCUMFERENTIAL TURNS OF TAPE.

ODD SHAPED APPURTENANCES:

VALVES, TEES, CROSSES AND OTHER ODD-SHAPED PIECES WHICH CANNOT BE WRAPPED PRACTICALLY IN A TUBE SHALL BE WRAPPED WITH A FLAT SHEET OR SPLIT LENGTH OF POLYETHYLENE TUBE. THE SHEET SHALL BE PASSED UNDER THE APPURTENANCE AND BROUGHT UP AROUND THE BODY. SEAMS SHALL BE MADE BY BRINGING THE EDGES TOGETHER, FOLDING OVER TWICE, AND TAPPING DOWN. SLACK WIDTH AND OVERLAPS AT JOINTS SHALL BE HANDLED AS DESCRIBED ABOVE. TAPE POLYETHYLENE SECURELY IN PLACE AT VALVE STEM AND OTHER PENETRATIONS.

BACKFILL FOR POLYETHYLENE WRAPPED PIPE:

BACKFILL MATERIAL SHALL BE THE SAME AS SPECIFIED FOR PIPE WITHOUT POLYTHYLENE WRAPPING. SPECIAL CARE SHOULD BE TAKEN TO PREVENT DAMAGE TO THE POLYETHYLENE WRAPPING WHEN PLACING BACKFILL, BACKFILL MATERIAL SHOULD BE FREE OF CINDERS, REFUGE, BOULDERS, ROCKS, STONES OR OTHER MATERIAL THAT COULD DAMAGE POLYETHYLENE.

CITY OF COLUMBUS DEPARTMENT OF PUBLIC UTILITIES DIVISION OF WATER APPROVED: R.C. Westerfield 5-14-13 ADMINISTRATOR DATE	STANDARD DETAIL INSTALLATION OF POLYETHYLENE ENCASEMENT FOR DUCTILE IRON PIPE	L-1003

L-1003.Dwg Revision Date: 1/29/13

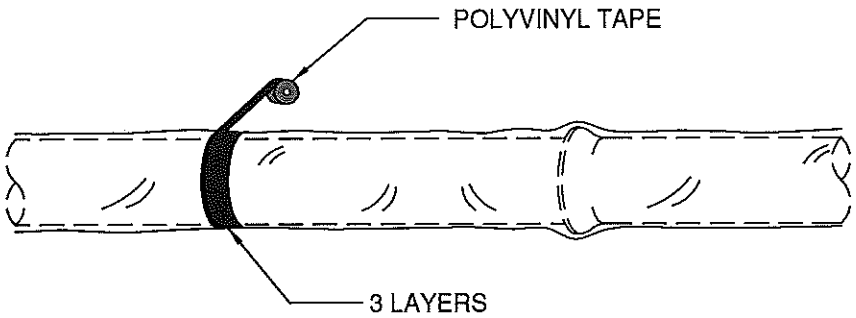

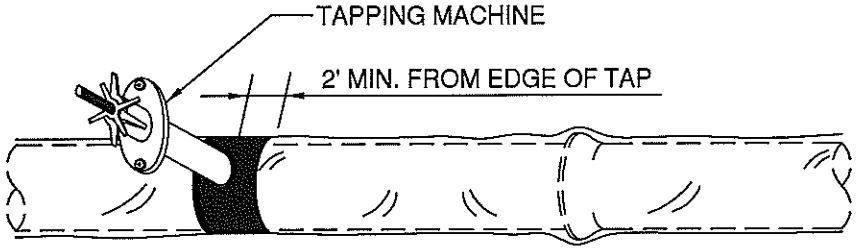

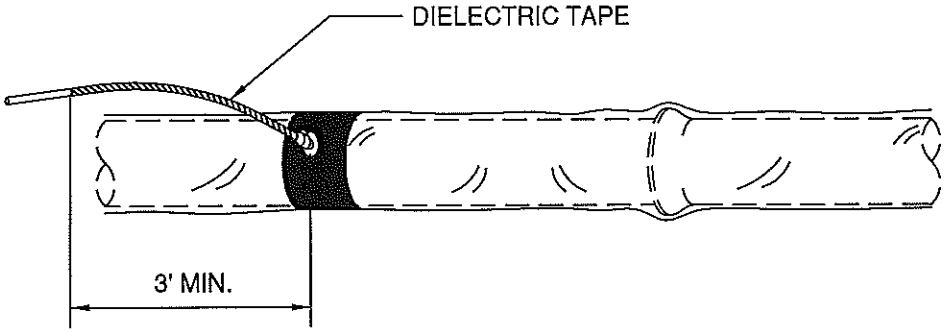

OPENINGS FOR SERVICE TAPS, BLOW-OFFS, AIR RELEASE VALVES AND SIMILIAR APPURTENANCES SHALL BE MADE OF:

1.) *WRAPPING (3) THREE LAYERS OF POLYVINYL - COMPATIBLE ADHESIVE TAPE COMPLETELY AROUND THE PIPE TO COVER THE AREA WHERE THE TAPPING MACHINE AND CHAIN WILL BE MOUNTED, EXTENDING A MINIMUM OF 2" BEYOND THE MOUNTING SURFACE.*

2.) *MOUNT THE TAPPING MACHINE ON THE PIPE AREA COVERED BY THE TAPE AND MAKE THE TAP AND INSTALL THE CORPORATION STOP DIRECTLY THROUGH THE TAPE AND POLYETHYLENE.*

3.) *INSPECT THE ENTIRE CIRCUMFERENTIAL AREA FOR DAMAGE AND MAKE ANY NECESSARY REPAIRS WITH TAPE.*

4.) *TO MINIMIZE THE POSSIBILITY OF DISSIMILIAR METAL CORROSION AT SERVICE CONNECTIONS, WRAP THE CORPORATION STOP AND A MINIMUM CLEAR DISTANCE OF THREE FEET OF THE COPPER SERVICE WITH POLYETHYLENE OR A SUITABLE DIELECTRIC TAPE.*

CITY OF COLUMBUS DEPARTMENT OF PUBLIC UTILITIES DIVISION OF WATER APPROVED: RC Westerfield 5-14-13 ADMINISTRATOR DATE	STANDARD DETAIL INSTALLATION OF POLYETHYLENE ENCASEMENT FOR SERVICE TAPS, BLOW-OFFS, AIR RELEASE VALVES & SIMILIAR APPURTENANCES	L-1004

L-1004.Dwg Revision Date: 1/2/13

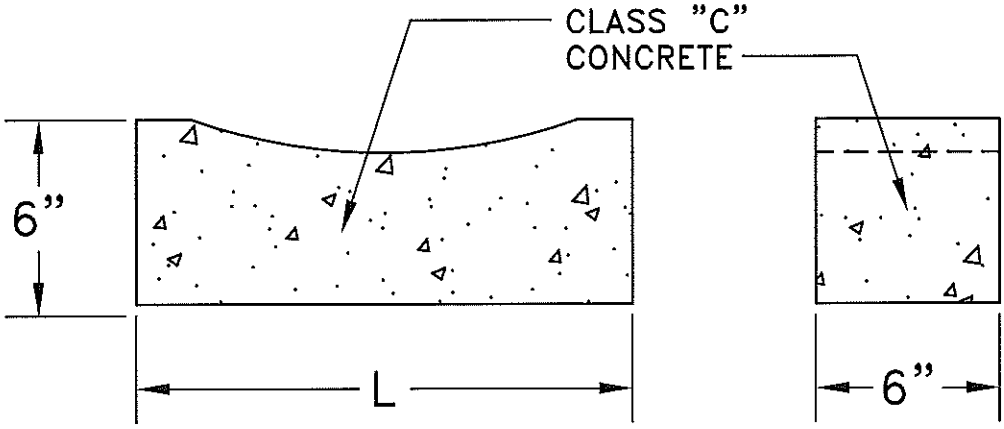

GATE VALVES

BUTTERFLY VALVES

SIZE OF VALVE	L	VOLUME CU-FT
3"	15"	0.31
4"	16"	0.33
6"	17"	0.36
8"	20"	0.42
12"	24"	0.50
16"	30"	0.63
20"	36"	0.75
24"	42"	0.88
30"	48"	1.00
36"	54"	1.13
42"	60"	1.25
48"	66"	1.38

NOTE:
FOR VALVES LARGER THAN 48" THE SUPPORT SHALL BE DESIGNED BY A STRUCTURAL ENGINEER.

CITY OF COLUMBUS
DEPARTMENT OF PUBLIC UTILITIES
DIVISION OF WATER

APPROVED: R C Waterfield 5-14-13
ADMINISTRATOR DATE

STANDARD DETAIL
CONCRETE VALVE SUPPORTS

L-6306

L-6306.Dwg Revision Date: 1/2/13

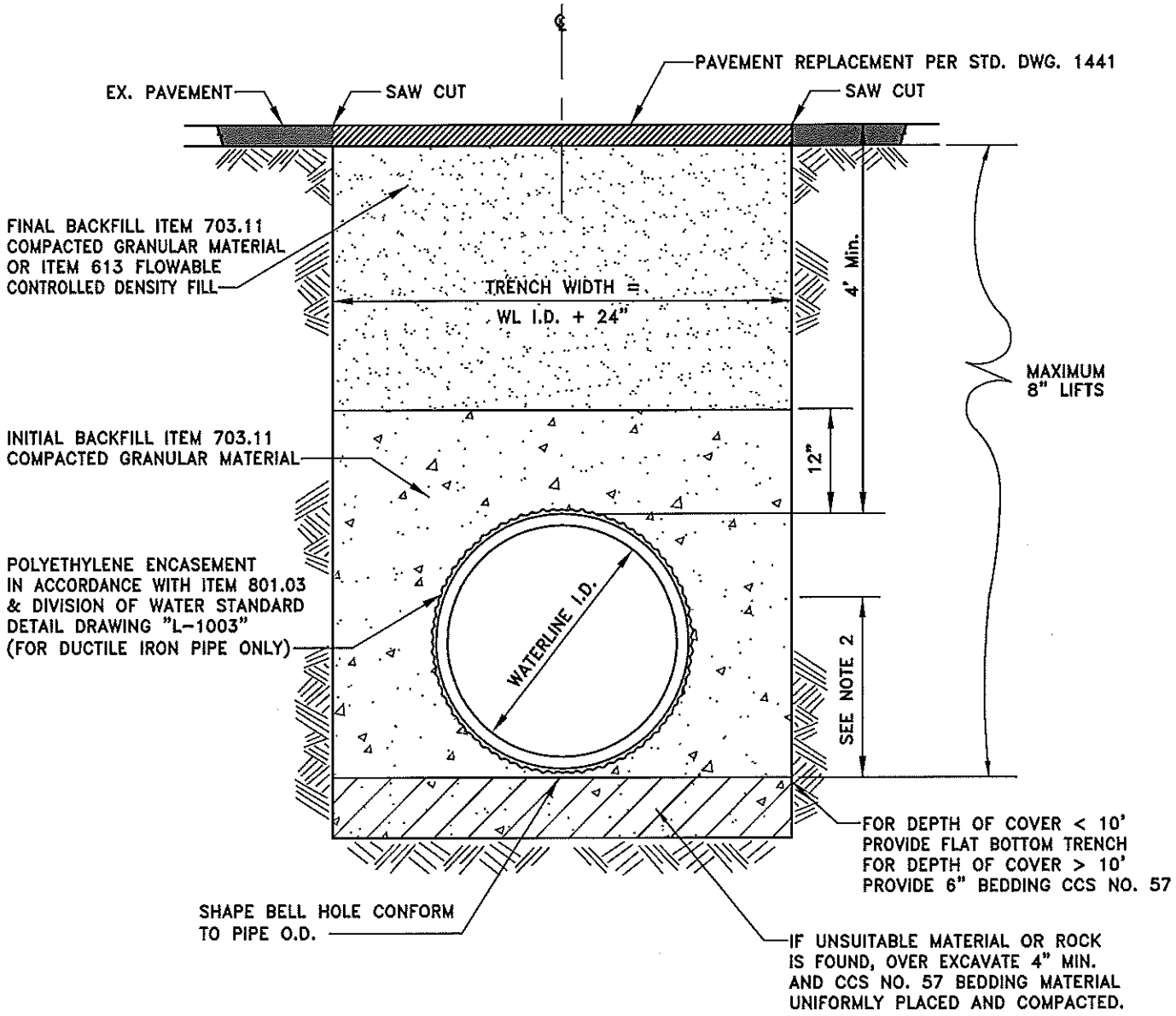

NOTES:

1. REFER TO OSHA REQUIREMENTS FOR MAXIMUM ALLOWABLE TRENCH SLOPES.
2. THIS PORTION OF PIPE EMBEDMENT ZONE MUST BE RECOMPACTED TO PROPER DENSITIES AFTER MOVING SUPPORT SYSTEM FORWARD.
3. PROVIDE FILTER FABRIC WHEN VERY FINE OR UNSTABLE MATERIAL IS ENCOUNTERED.
4. BACKFILL SHALL BE COMPACTED PER THE REQUIREMENTS OF ITEM 801.12.

CITY OF COLUMBUS DEPARTMENT OF PUBLIC UTILITIES DIVISION OF WATER APPROVED: R.C. Westenfield 5-14-13 ADMINISTRATOR DATE	STANDARD DETAIL TYPICAL TRENCH EXCAVATION & BACKFILL UNDER INFLUENCE OF PAVEMENT (FOR 16" DIAMETER WATER MAIN AND SMALLER)	L-6309A

L-6309A Revision Date: 3/4/13

PIPE SIZE	11.25°				22.5°				45°			
	L"	W"	H"	Vol.	L"	W"	H"	Vol.	L"	W"	H"	Vol.
3"	12	18	12	1.5	13	25	16	3.0	18	30	19	5.9
4"	12	24	16	2.6	16	30	18	5.0	22	36	24	11.0
6"	12	48	18	6.0	15	43	36	13.4	30	55	24	22.9
8"	12	63	24	10.5	18	57	34	20.2	36	57	33	39.2
12"	20	54	36	22.6	37	62	37	49.0	48	62	51	87.9
16"	31	65	38	44.3	60	65	39	88.1	65	65	65	159.2

NOTES:

1. VOLUMES GIVEN IN CUBIC FEET.
2. BACKER TO BE CENTERED HORIZONTALLY ON BEND.
3. STEEL WILL BE USED AS REQUIRED BY THE ENGINEER.
4. ALL NEW PIPE 20" & LARGER SHALL BE RESTRAINED JOINT PER CCMS ITEM 801 UNLESS OTHERWISE PER PLAN OR AS DIRECTED BY THE ENGINEER.
5. EXISTING WATER LINES 20" AND GREATER MUST HAVE PRIOR APPROVAL FROM DOW TO LOWER UNDER A PROPOSED UTILITY. APPROVAL WILL ONLY BE GIVEN UNDER SPECIAL CIRCUMSTANCES AND CONTINGENT UPON THE CONTRACTOR SUBMITTING A DESIGNED DRAWING, STAMPED BY A PROFESSIONAL ENGINEER, DETAILING HOW THE LOWERED WATER MAIN WILL BE RESTRAINED TO THE EXISTING WATER MAIN.
6. WHERE POLYETHYLENE ENCASEMENT IS REQUIRED, ALL GLANDS & BOLTS SHALL BE WRAPPED PRIOR TO PLACEMENT OF CONCRETE BLOCKING, SEE "L-1003".

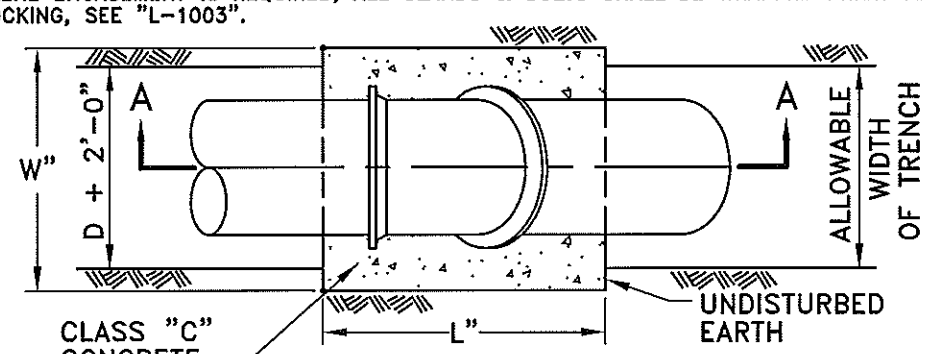

PLAN VIEW

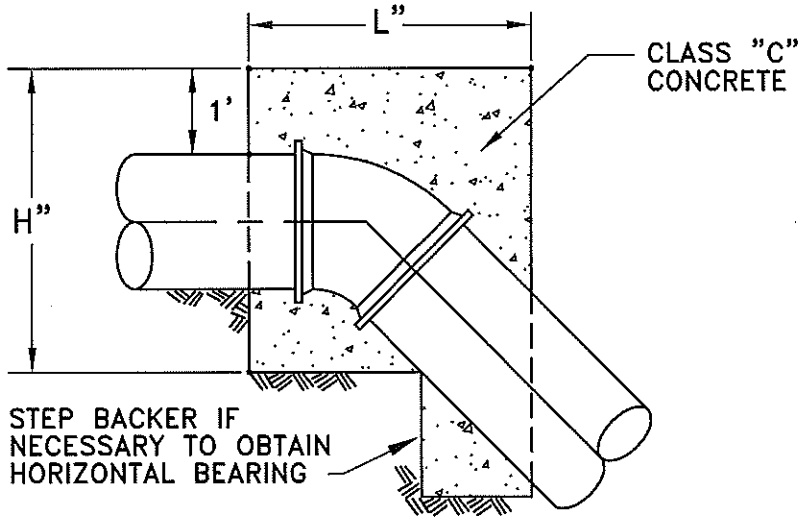

SECTION A-A

CITY OF COLUMBUS DEPARTMENT OF PUBLIC UTILITIES DIVISION OF WATER APPROVED: R C Westerfield 5-14-13 ADMINISTRATOR DATE	STANDARD DETAIL BACKING FOR VERTICAL BENDS (OVER BENDS ONLY)	L-6310

L-6310.Dwg Revision Date: 1/2/13

SIZE OF PIPE	DEGREE OF BEND											
	11.25°			22.50°			45°			90° (HORZ. ONLY)		
	L"	D"	Vc.f.	L"	D"	Vc.f.	L"	D"	Vc.f.	L"	D"	Vc.f.
3"	4	3	0.1	6	4	0.2	10	4	0.3	10	4	0.3
4"	5	4	0.2	9	5	0.4	14	5	0.6	14	5	0.6
6"	8	6	0.5	12	7	0.7	20	8	1.4	18	9	1.7
8"	9	8	0.7	16	9	1.4	24	12	2.7	25	11	4.0
12"	14	12	1.8	24	14	3.6	36	18	6.8	32	18	10.7
16"	18	16	3.4	32	18	6.7	36	32	13.4	41	26	25.6
STEEL WILL BE USED AS REQUIRED BY ENGINEER												

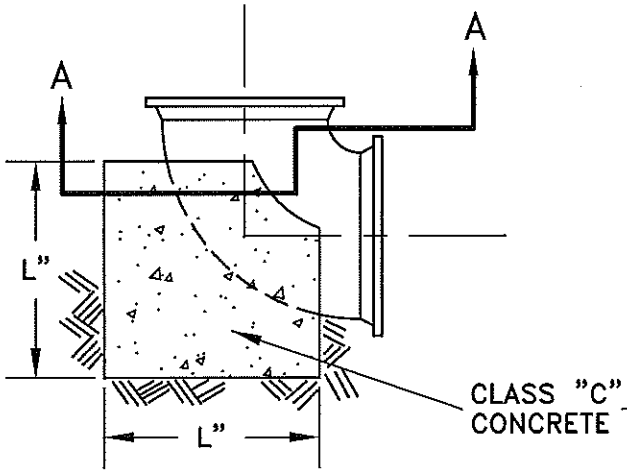

90° BENDS

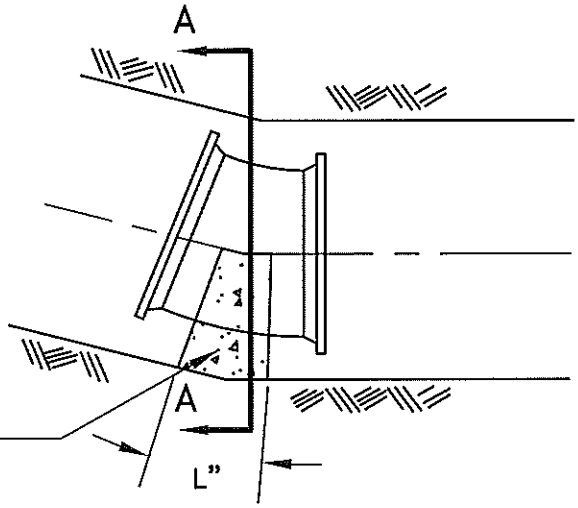

BENDS LESS THAN 90°

NOTES:

1. BACKER DESIGNED FOR 3000 PSF SOIL BEARING.
2. CONCRETE TO BE PLACED AGAINST UNDISTURBED EARTH.
3. ALL NEW PIPE 20" & LARGER SHALL BE RESTRAINED JOINT PER CCMS ITEM 801 UNLESS OTHERWISE INDICATED PER PLAN OR AS DIRECTED BY THE ENGINEER.
4. EXISTING WATER LINES 20" AND GREATER MUST HAVE PRIOR APPROVAL FROM DOW TO LOWER UNDER A PROPOSED UTILITY. APPROVAL WILL ONLY BE GIVEN UNDER SPECIAL CIRCUMSTANCES AND CONTINGENT UPON THE CONTRACTOR SUBMITTING A DESIGNED DRAWING, STAMPED BY A PROFESSIONAL ENGINEER, DETAILING HOW THE LOWERED WATER MAIN WILL BE RESTRAINED TO THE EXISTING WATER MAIN.
5. PROVIDE CLEARANCE FOR REMOVAL OF BOLTS.

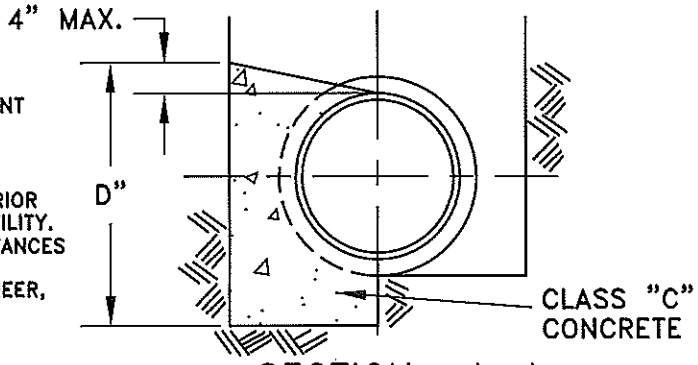

SECTION A–A

CITY OF COLUMBUS DEPARTMENT OF PUBLIC UTILITIES DIVISION OF WATER APPROVED: RC Westerfield 5-14-13 ADMINISTRATOR DATE	STANDARD DETAIL BACKING FOR BENDS HORIZONTAL AND VERTICAL SAG	L-6311

L-6311.Dwg Revision Date: 1/11/13

RUN	BRANCH																							
	3"			4"			6"			8"			12"			16"			20"			24"		
	L"	D"	Vc.f.	L"	D"	Vc.f.	L"	D"	Vc.f.	L"	D"	Vc.f.	L"	D"	Vc.f.	L"	D"	Vc.f.	L"	D"	Vc.f.	L"	D"	Vc.f.
3"	12	5	0.5																					
4"	10	6	0.5	11	8	0.8																		
6"	9	7	0.5	11	8	0.8	18	12	1.9															
8"	8	8	0.5	10	9	0.7	18	12	1.9	23	16	3.5												
12"	6	12	0.6	8	12	0.8	18	12	1.9	23	16	3.5	38	22	8.7									
16"							14	16	2.0	20	18	3.3	36	23	8.7	49	30	13.6						
20"							11	20	1.9	18	20	3.3	35	24	8.7	46	32	13.6	60	38	26.5			
24"							9	24	1.9	15	24	3.3	30	28	8.7	42	36	14.0	54	42	26.3	68	48	45.4

STEEL WILL BE USED AS REQUIRED BY THE ENGINEER

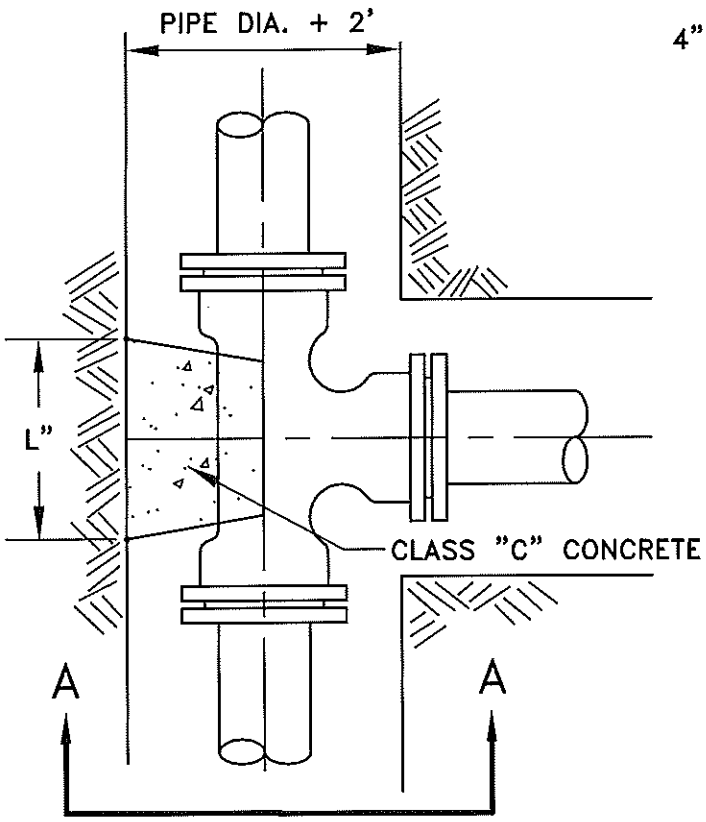

PLAN VIEW

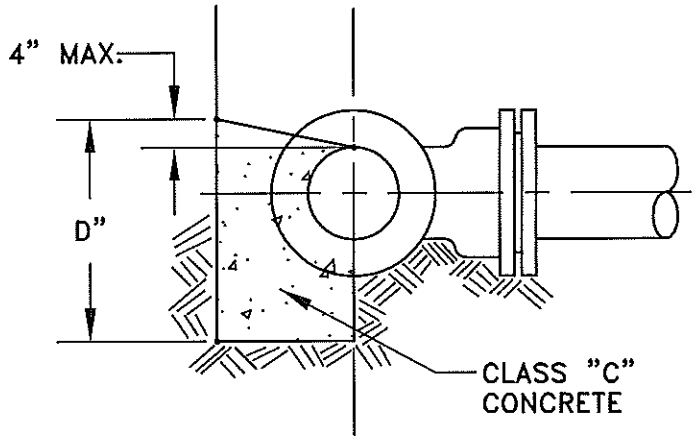

SECTION A–A

NOTES:

1. BACKER DESIGNED FOR 3000 PSF SOIL BEARING.
2. CONCRETE TO BE PLACED AGAINST UNDISTURBED EARTH.
3. PROVIDE CLEARANCE FOR REMOVAL OF BOLTS.

CITY OF COLUMBUS
DEPARTMENT OF PUBLIC UTILITIES
DIVISION OF WATER

APPROVED: R C Westerfield 5-14-13
ADMINISTRATOR DATE

STANDARD DETAIL
BACKING FOR TEES

L-6312

L-6312.Dwg Revision Date: 1/2/13

NOTE:
AVERAGE WEIGHTS TO NEAREST EVEN LB. CALCULATED USING 0.26 LB/CU. IN.

NOTE:
NO MORE THAN ONE VALVE STEM SLEEVE PERMITTED PER VALVE SETTING.

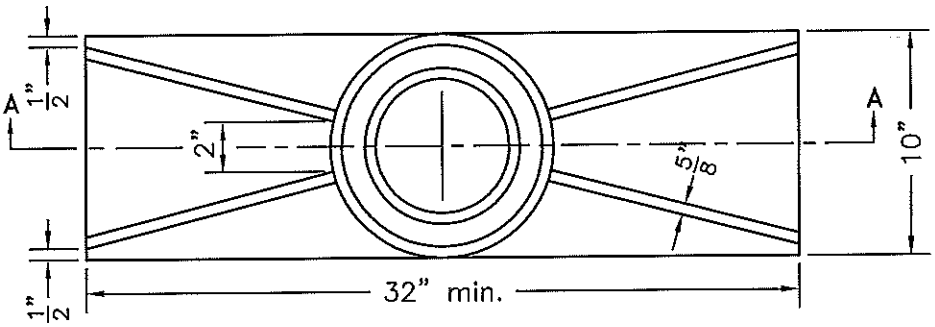

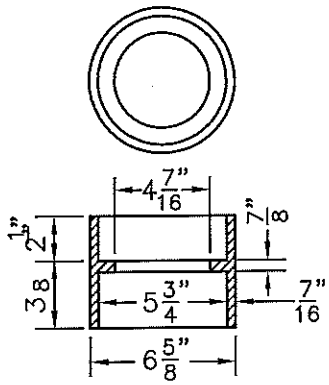

VALVE STEM SLEEVE
14 LBS.

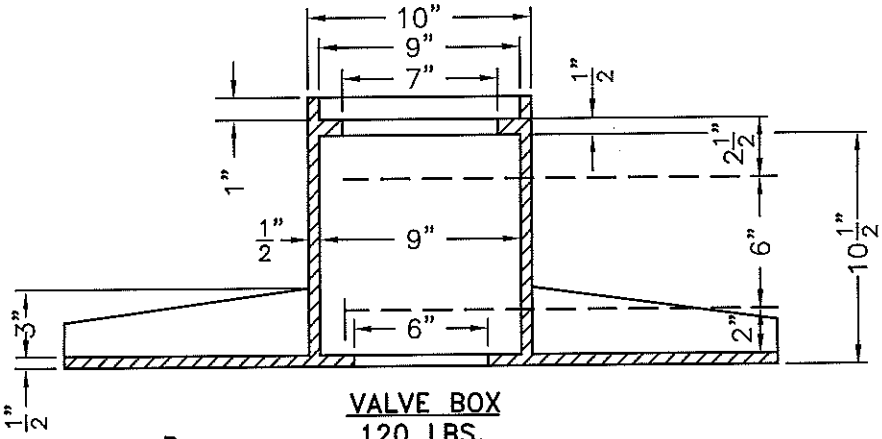

VALVE BOX
120 LBS.

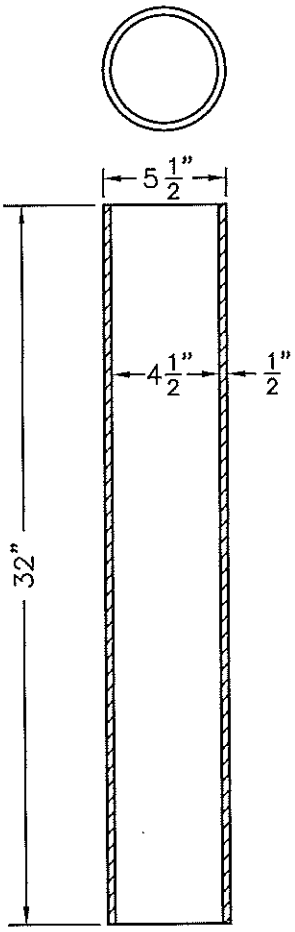

VALVE STEM
65 LBS.
(or 5" C.I. Pipe-ASA022)

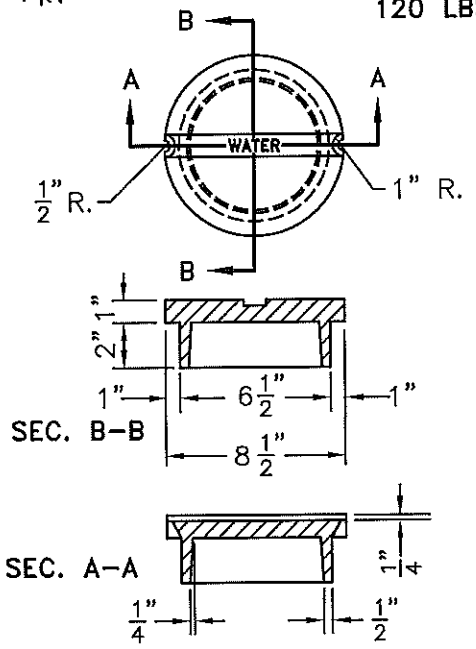

VALVE BOX LID
17 LBS.

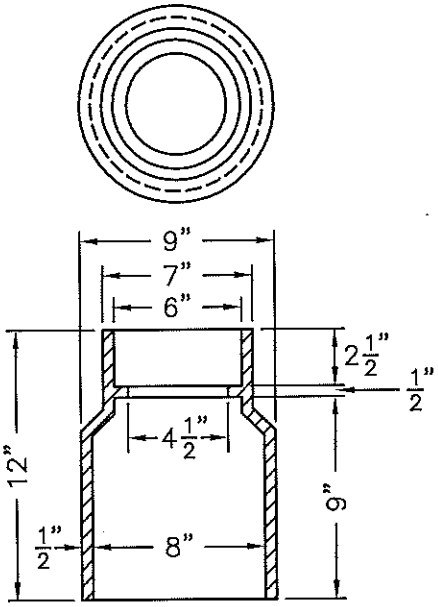

VALVE BOX BASE
41 LBS.

CITY OF COLUMBUS DEPARTMENT OF PUBLIC UTILITIES DIVISION OF WATER	STANDARD DETAIL COLUMBUS STANDARD HEAVY DUTY VALVE BOX	L-6316A
APPROVED: R.C. Westerfield 5-14-13 ADMINISTRATOR DATE		

L-6316a.Dwg Revision Date: 1/2/13

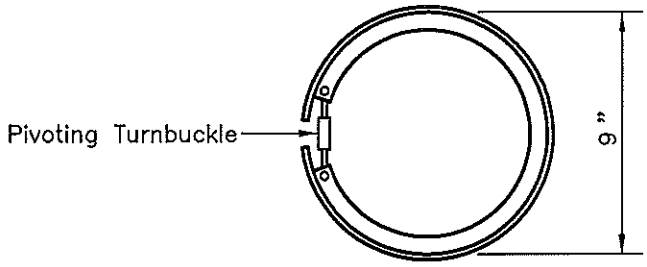

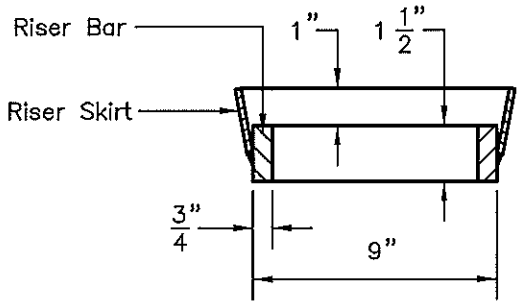

VALVE BOX RISER (1 1/2" Shown)
(Can vary from 1" to 3")

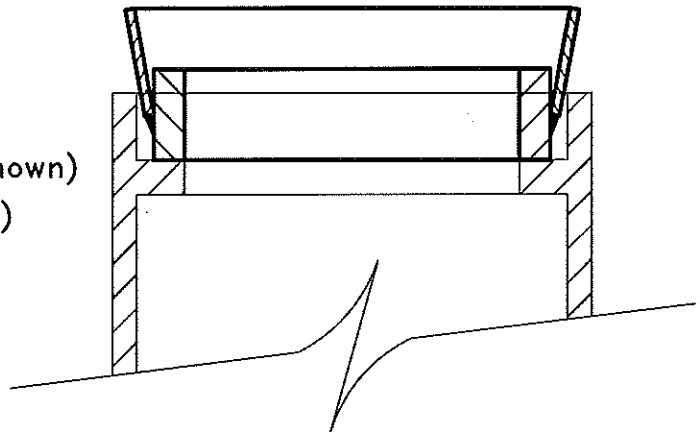

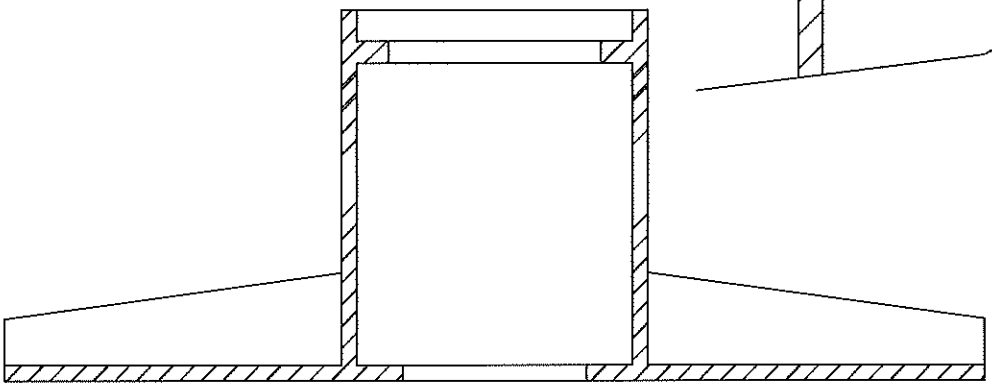

VALVE BOX
FOR DETAILS SEE "L-6316A"

NOTES:

1. FOR USE ON EXISTING VALVE BOXES ONLY, NOT PERMITTED FOR USE WITH NEW VALVE BOX INSTALLATIONS.

2. NOT MORE THAN 1 RISER SHALL BE PERMITTED AT ANY ONE (1) SETTING. SHOULD THE REQUIRED ADJUSTMENT BE MORE THAN THIS THEN THE ADJUSTMENT SHALL BE MADE TO THE VALVE STEM.

CITY OF COLUMBUS DEPARTMENT OF PUBLIC UTILITIES DIVISION OF WATER APPROVED: RC Westerfield 5-14-13 ADMINISTRATOR DATE	STANDARD DETAIL RISER FOR USE W/ EXISTING COLUMBUS STANDARD HEAVY DUTY VALVE BOX	L-6316B

L-6316b.Dwg Revision Date: 1/11/13

L-6473A.Dwg Revision Date: 1/2/13

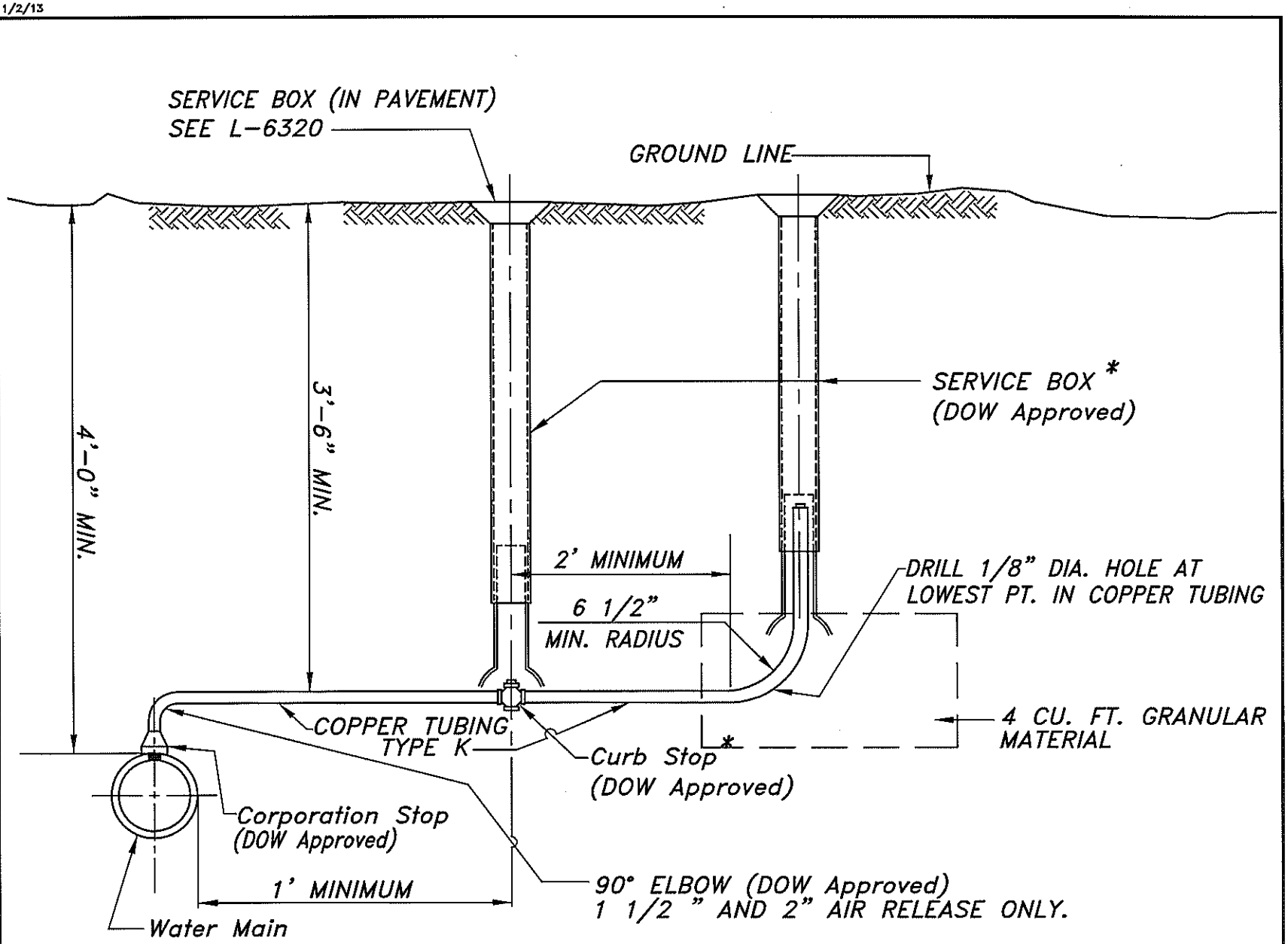

* NOTE:
For reference in placing new curb stops and curb boxes see L-9901.

CITY OF COLUMBUS
DEPARTMENT OF PUBLIC UTILITIES
DIVISION OF WATER

APPROVED: [signature]
ADMINISTRATOR

5-15-13
DATE

STANDARD DETAIL
TYPICAL AIR RELEASE
3/4" THRU 2"
(BERM & SIDE DITCH AREAS)

L-6473A

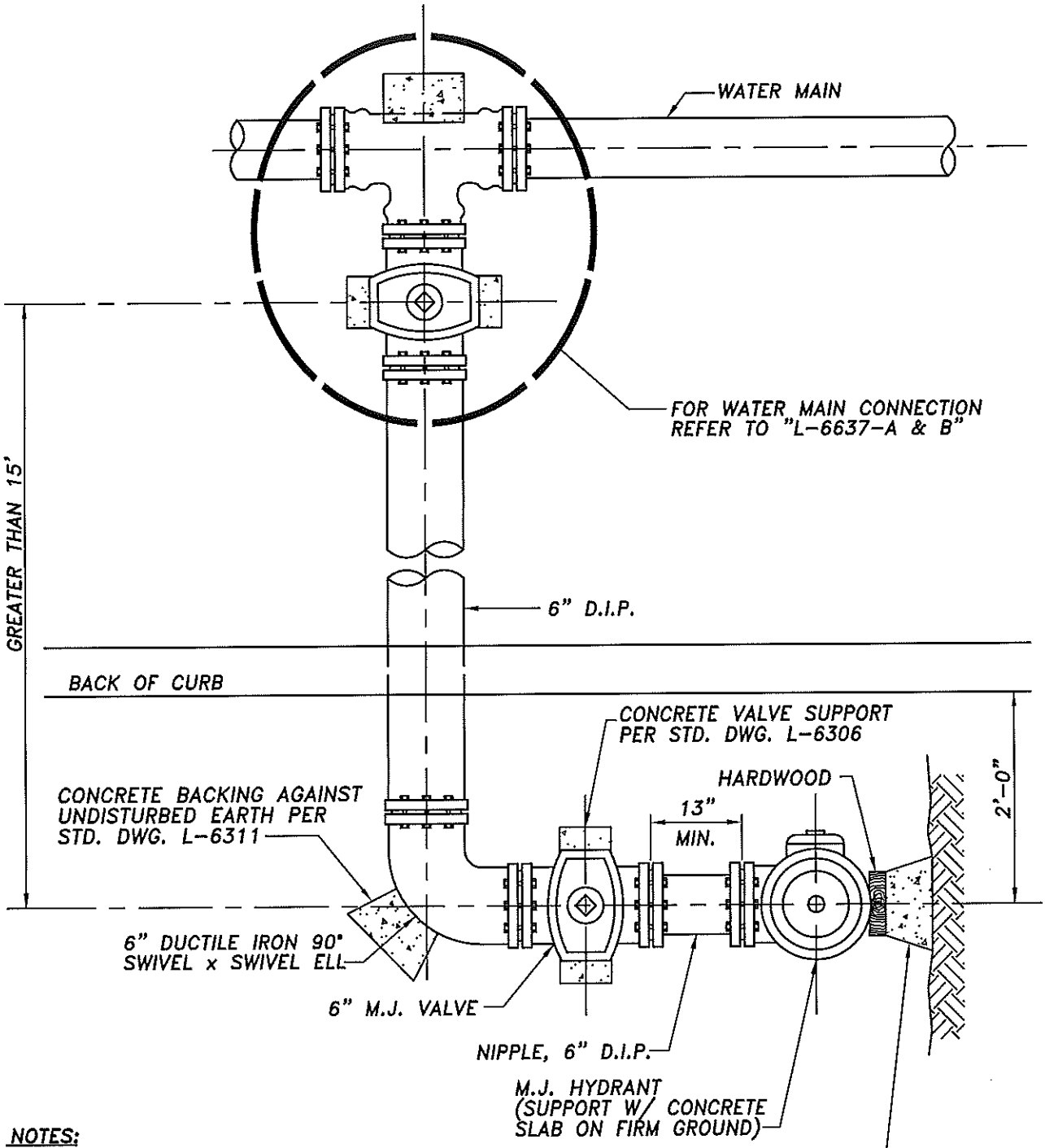

NOTES:

1. FIRE HYDRANT SHALL HAVE A MAXIMUM BURY OF 7'-0". MODIFICATION OF THE HYDRANT LEAD TO MEET THIS REQUIREMENT SHALL BE IN THAT SECTION FROM THE VALVE TO THE HYDRANT AS PER STANDARD DETAIL L-7601.
2. FIRE HYDRANTS SHALL BE SET A MINIMUM OF 6' FROM ALL DRIVEWAY OPENINGS.
3. TEE USED TO CONNECT THE HYDRANT LEAD TO WATER MAIN IS INCLUDED IN COST OF ITEM 809, FIRE HYDRANT.

CITY OF COLUMBUS DEPARTMENT OF PUBLIC UTILITIES DIVISION OF WATER	STANDARD DETAIL TYPICAL TYPE "A" MODIFIED HYDRANT SETTING (DOUBLE VALVE SET UP IN CURB)	L-6637C
APPROVED: R.C. Westerfield 5-16-13 ADMINISTRATOR DATE		

L-6637C.dwg Revision Date: 1/2/13

LENGTH OF PIPE	GALLONS PER HOUR												
	6" Pipe	8" Pipe	12" Pipe	16" Pipe	20" Pipe	24" Pipe	30" Pipe	36" Pipe	42" Pipe	48" Pipe	54" Pipe	60" Pipe	66" Pipe
50	0.02	0.03	0.05	0.07	0.08	0.10	0.12	0.15	0.17	0.20	0.22	0.25	0.27
100	0.05	0.07	0.10	0.13	0.17	0.20	0.25	0.30	0.35	0.40	0.45	0.50	0.55
200	0.10	0.13	0.20	0.26	0.33	0.40	0.50	0.60	0.70	0.79	0.89	0.99	1.09
300	0.15	0.20	0.30	.040	0.50	0.60	0.74	0.89	1.04	1.19	1.34	1.49	1.64
400	0.20	0.26	0.40	0.53	0.66	0.79	0.99	1.19	1.39	1.59	1.79	1.99	2.18
500	0.25	0.33	0.50	0.66	0.83	0.99	1.24	1.49	1.74	1.99	2.23	2.48	2.73
600	0.30	0.40	0.60	0.79	0.99	1.19	1.49	1.79	2.09	2.38	2.68	2.98	3.28
700	0.35	0.46	0.70	0.93	1.16	1.39	1.74	2.09	2.43	2.78	3.13	3.48	3.82
800	0.40	0.53	0.79	1.06	1.32	1.59	1.99	2.38	2.78	3.18	3.57	3.97	4.37
900	0.45	0.60	0.89	1.19	1.49	1.79	2.23	2.68	3.13	3.57	4.02	4.47	4.92
1000	0.50	0.66	0.99	1.32	1.66	1.99	2.48	2.98	3.48	3.97	4.47	4.97	5.46
2500	1.24	1.66	2.48	3.31	4.14	4.97	6.21	7.45	8.69	9.93	11.17	12.41	13.65
5000	2.48	3.31	4.97	6.62	8.28	9.93	12.41	14.90	17.38	19.86	22.34	24.83	27.31
7500	3.72	4.97	7.45	9.93	12.41	14.90	18.62	22.34	26.07	29.79	33.51	37.24	40.96
10000	4.97	6.62	9.93	13.24	16.55	19.86	24.83	29.79	34.76	39.72	44.69	49.65	54.62

FORMULA: $L = \frac{SD\sqrt{P}}{148{,}000}$

Where:
L = Allowable Leakage (gal./hr.)
S = Length of pipe tested in feet.
D = Nominal pipe diameter in inches.
P = Test pressure (150 psi)

When testing against closed metal-seated valves, an additional leakage per closed valve of 0.0078 gal./hr./in. of nominal valve size will be allowed.

These calculations are based on "AWWA C-600-10" Specifications, Section 4, Hydrostatic Testing, Dated December 1, 2005.

CITY OF COLUMBUS
DEPARTMENT OF PUBLIC UTILITIES
DIVISION OF WATER

APPROVED: R C Westerfield 5-16-13
ADMINISTRATOR DATE

STANDARD DETAIL
ALLOWABLE LEAKAGE TABLE

L-6640

L-6640.Dwg Revision Date: 3/5/13

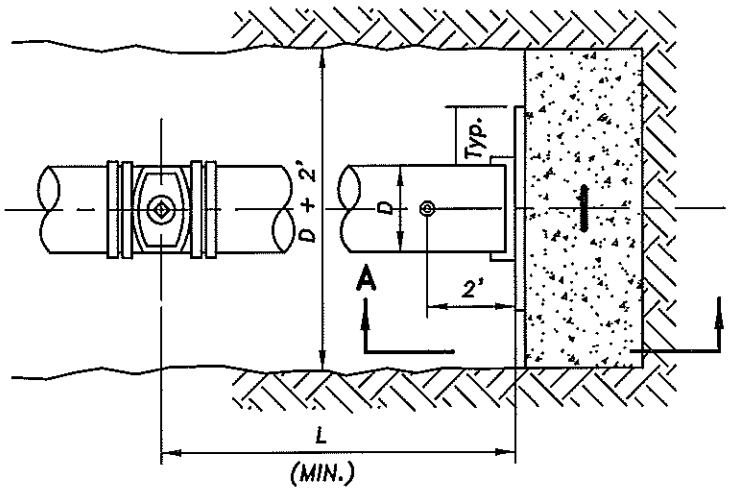

PLAN VIEW

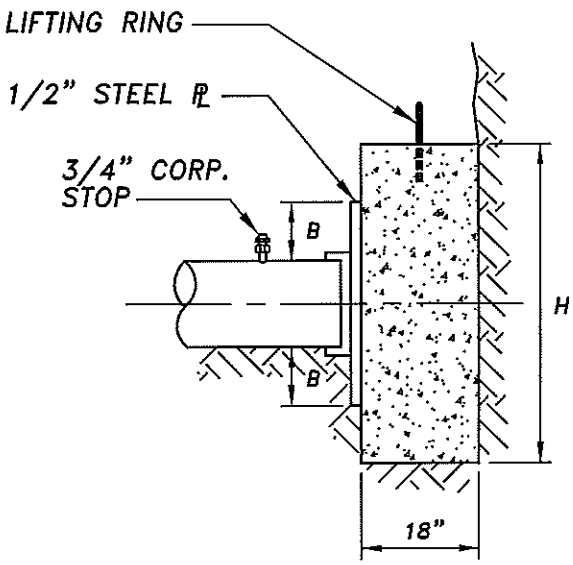

SECTION A–A

PIPE DIAMETER (D)	H	B	L	VOLUME CU-FT
3"	5"	1"	10'	1.43
4"	6"	1"	10'	1.76
6"	8"	1"	10'	2.52
8"	12"	1"	10'	4.00
12"	23"	3"	18'	8.64
16"	37"	3"	18'	15.39

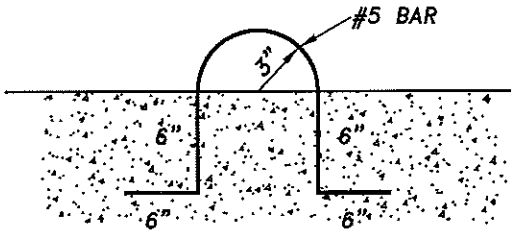

LIFT RING DETAIL

NOTES:

1. BACKER DESIGNED FOR 3000 PSF SOIL BEARING.
2. END OF PIPE CAPPED OR PLUGGED.
3. GREASE STEEL PLATE WHERE IN CONTACT WITH CONCRETE BACKER.
4. PLACE CONCRETE AGAINST UNDISTURBED SOIL.
5. THOROUGHLY COMPACT BACKFILL BETWEEN VALVE AND END OF PIPE.
6. FOR WATER LINES 20" AND GREATER, A THRUST RESTRAINT SYSTEM FOR DEAD END PIPE MUST BE DESIGNED BASED UPON EXISTING SITE CONDITIONS AND PROJECT REQUIREMENTS. DESIGN DRAWINGS AND CALCULATIONS SHALL BE PREPARED BY A PROFESSIONAL ENGINEER AND BE SUBMITTED TO DOW FOR REVIEW.

CITY OF COLUMBUS DEPARTMENT OF PUBLIC UTILITIES DIVISION OF WATER	STANDARD DETAIL THRUST BLOCK DETAIL END OF PIPE	L–7001
APPROVED: L C Westerfield 5-16-13 ADMINISTRATOR DATE		

L–7001.Dwg Revision Date: 1/11/13

NOTES:

The Curb Box shall be placed 1'-0" from the streetedge of the proposed or existing sidewalk/bikepath, or 2 feet inside the right-of-way or easement line when no sidewalk/bikepath is present or proposed.

When a curb box is installed within a traveled area, the contractor shall install a C.I. Ferrule Box per "L-6320".

The Curb Stop Shall Be Installed with Valve Opening Facing the Structure to be served. The Curb Stop Shall Turn "1/4 Turn" Clockwise From On to Off Position. (Typical)

* **NOTE:**
Pipe Shall Be Copper Tubing Size (C.T.S.)

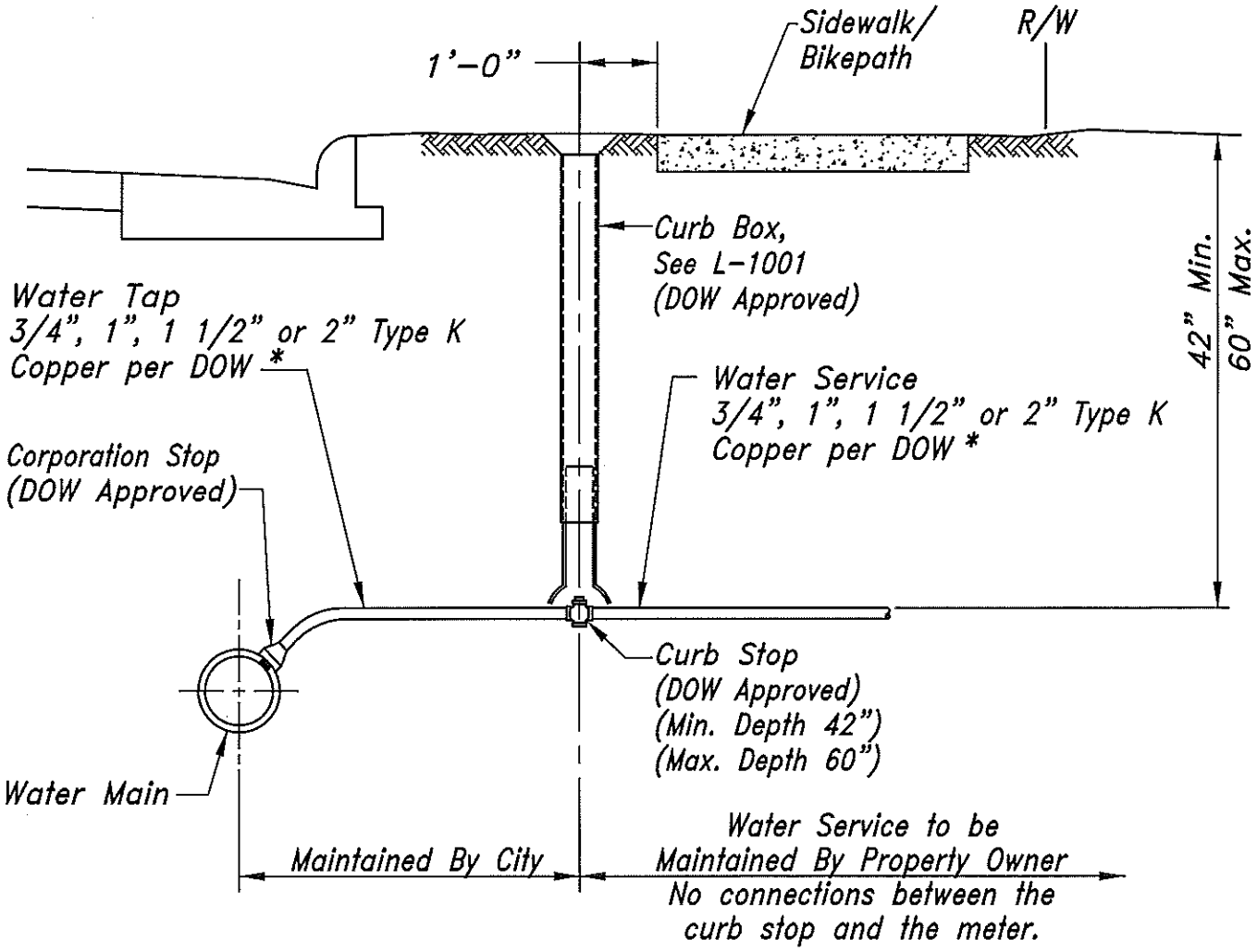

CITY OF COLUMBUS DEPARTMENT OF PUBLIC UTILITIES DIVISION OF WATER APPROVED: R.C. Westerfield 5-16-13 ADMINISTRATOR / DATE	STANDARD DETAIL CURB BOX INSTALLATION 3/4" THRU 2"	L-9901

L-9901.Dwg Revision Date: 3/4/13

STATE OF OHIO
DEPARTMENT OF TRANSPORTATION
SUPPLEMENTAL SPECIFICATION 800
REVISIONS TO THE 2013 CONSTRUCTION & MATERIAL SPECIFICATIONS

DATED 04-18-2014

103.05

On page 17, **Replace** the subsection with the following:

103.05 Requirement of Contract Bond. Furnish Contract Bonds within 10 days after receiving notice of award. Furnish Contract Bonds to the Director on the prescribed form, in the amount of the contract, and according to ORC 5525.16.

105.17

On page 29, **Replace** the last paragraph with the following section:

Clean hard fill consisting of reinforced or non-reinforced concrete, asphalt concrete, brick, block, tile or stone that is free of all steel as per 703.16 shall be managed in one or more of the following ways:

1. Recycled into a usable construction material.
2. Disposed in licensed construction and demolition debris facility.
3. Used in legitimate fill operations on the site of generation according to 105.16.
4. Used in legitimate fill operations on a site other than the site of generation to bring a site up to grade on an existing roadbed or parking lot project.

A Beneficial Reuse Certification form needs to be properly executed by the Recipient prior to any material leaving the project.

106.09.E

On page 33, **replace** the subsection with the following:

E. Manufactured Products. In order for a manufactured product to be subject to Federal requirements, the product must consist of at least 90% steel or iron content when it is delivered to the job site for installation.

Examples of products subject to Federal requirements include, but are not limited to, the following:

1. Steel or iron products used in pavements, bridges, tunnels or other structures, which include , but are not limited to, the following: fabricated structural steel, reinforcing steel, piling, high strength bolts, anchor bolts, dowel bars, permanently incorporated sheet piling, bridge bearings, cable wire/strand, prestressing/post-tensioning wire, motor/machinery brakes and other equipment for moveable structures;
2. Guardrail, guardrail posts, end sections, terminals, cable guardrail;
3. Steel fencing material, fence posts;
4. Steel or iron pipe, conduit, grates, manhole covers, risers;
5. Mast arms, poles, standards, trusses, or supporting structural members for signs, luminaires, or traffic control systems; and
6. Steel or iron components of precast concrete products, such as reinforcing steel, wire mesh and pre-stressing or post-tensioning strands or cables

The miscellaneous steel or iron components, subcomponents and hardware necessary to encase, assemble and construct the above components (or manufactured products that are not predominately steel or iron) are not subject to Federal requirements. Examples include, but are not limited to, cabinets, covers, shelves, clamps, fittings, sleeves, washers, bolts, nuts, screws, tie wire, spacers, chairs, lifting hooks, faucets, door hinges, etc.

F. Proof of Domestic Origin. Furnish documentation to the Engineer showing the domestic origin of all steel and iron products covered by this section, before they are incorporated into the Work. Products without a traceable domestic origin will be treated as a non-domestic product.

107.10

On page 36, **Replace** the paragraph starting with "Except for locations utilized specifically for" with the following section:

Except for locations utilized specifically for;

1. parking of equipment between workdays for maintenance type projects;
2. disposal or stockpile locations that currently hold a Federal, ODNR or OEPA sanctioned permit that specifically allows the disposal or stockpiling activity. This exception requires the contractor to provide the Engineer with the permitted facility's name, location, site ID number and the permit holder's certification that disposal or stockpiling the project generated material is compliant with the recipient's permit.

All areas proposed to be utilized by the Contractor outside the project construction limits and not described above shall be reviewed by environmental contractor(s) that are prequalified by the Department for each environmental resource. This exception applies to projects with "maintenance" in the project description. Have the consultant(s) certify that the proposed site to be utilized for the Contractor will not impact:

107.19

On page 43, **Replace** the entire subsection with the following:

107.19 Environmental Protection. Comply with all Federal, State, and local laws and regulations controlling pollution of the environment. Avoid polluting streams, lakes, ponds, and reservoirs with fuels, oils, bitumens, chemicals, sediments, or other harmful materials, and avoid polluting the atmosphere with particulate and gaseous matter.

By execution of this contract, the Contractor, will be deemed to have stipulated as follows:

A. That any facility that is or will be utilized in the performance of this contract, unless such contract is exempt under the Clean Air Act, as amended (42 U.S.C. 1857 et seq., as amended by Pub.L. 91-604), and under the Federal Water Pollution Control Act, as amended (33 U.S.C. 1251 et seq., as amended by Pub.L. 92-500), Executive Order 11738, and regulations in implementation thereof (40 CFR 15) is not listed, on the date of contract award, on the U.S. Environmental Protection Agency (EPA) List of Violating Facilities pursuant to 40 CFR 15.20.

B. That the firm agrees to comply and remain in compliance with all the requirements of Section 114 of the Clean Air Act and Section 308 of the Federal Water Pollution Control Act and all regulations and guidelines listed thereunder.

C. That the firm shall promptly notify the Department of the receipt of any communication from the Director, Office of Federal Activities, EPA, indicating that a facility that is or will be utilized for the contract is under consideration to be listed on the EPA List of Violating Facilities.

D. That the firm agrees to include or cause to be included the requirements of paragraph 1 through 4 of this Section in every nonexempt subcontract, and further agrees to take such action as the government may direct as a means of enforcing such requirements.

Fording of streams is prohibited. Causeways for stream and river crossings or for Work below a bridge are permitted provided:

A. The causeway complies with the requirements of the 404 Permit the Department obtained for the Project.

B. The Contractor obtains a 404 Permit from the U.S. Army Corps of Engineers if the Department has not obtained such a permit. Obtain the 404 Permit prior to beginning construction of the causeway. The Department does not guarantee that the Contractor will be able to obtain a 404 Permit.

Comply with all current provisions of the Ohio Water Pollution Control Act, (OWPCA), (ORC Chapter 6111). The Department will obtain a storm water permit under the OWPCA provisions when the plan work acreage requires a permit. Apply for a permit to cover operations outside the Project limits shown on the plans as required by the OWPCA provisions. When the Department has not applied for a permit on the Project and a permit is required under the provisions of the OWPCA because of the total area of the Contractor's work, apply for, obtain, and comply with the required permit for both the Work within Project limits and the Contractor's work.

The Department has obtained the required permits from the U.S. Army Corps of Engineers and Ohio EPA for Work in the "Waters of the United States" and isolated wetlands under ORC Chapter 6111. Comply with the requirements of these permits.

When equipment is working next to a stream, lake, pond, or reservoir, appropriate spill response equipment is required. Do not stockpile fine material next to a stream, lake, pond, or reservoir.

Take precautions to avoid demolition debris and discharges associated with the excavation and hauling of material from entering the stream. Remove any material that does fall into the stream as soon as possible.

When excavating in or adjacent to streams, separate such areas from the main stream by a dike or barrier to keep sediment from entering the stream. Take care during the construction and removal of such barriers to minimize sediment entering the stream.

Contain, collect, characterize and legally dispose of all waste water and sludge generated during the work. Do not mix waste water with storm water. Do not discharge any waste water without the appropriate regulatory permits. Manage waste water and sludge in accordance with ORC Chapter 6111 and all other laws, regulations, permits and local ordinances relating to this waste. Waste water management is incidental to the Work unless otherwise specified in the contract.

Control the fugitive dust generated by the Work according to OAC-3745-17-07(B), OAC-3745-17-08, OAC-3745-15-07, and OAC-3745-17-03 and local ordinances and regulations. Prior to the initiation of abrasive coating removal, pavement cutting or any other construction operation that generates dust, demonstrate to the Engineer that construction related dust will be controlled with appropriate Reasonable Available Control Measures (RACM) as described in OEPA Engineering Guide #57 (http://epa.ohio.gov/dapc/engineer/eguides.aspx).

In addition, use dust control measures when fugitive dust creates unsafe conditions as determined by the Engineer. Perform this work without additional compensation except for Item 616.

Perform open burning according to 105.16.

109.05.C.6

On page 74, **Replace** the first paragraph with the following:

6. Subcontract Work. For Work performed by an approved subcontractor, the Department will pay an amount to cover administrative costs of 8% on the first $10,000 of work and 5% for work in excess of $10,000 as provided in 109.05.C.2 through 109.05.C.5. No additional mark-up is allowed for work of a sub-subcontractor or trucking services employed by a subcontractor.

109.05.C.6

On page 74, **Delete** Table 109.05-2.

109.05.C.8.a

On page 75, **Replace** the first paragraph of 109.05.C.8.a with:

8. Trucking.

a. Trucking firms and owner operators not subject to prevailing wage will be paid at the invoiced cost plus 8% on the first $10,000 of trucking and 5% for trucking in excess of $10,000 to cover administrative costs.

109.05.C.8.a

On page 75, **Delete** Table 109.05-3.

202.02

On page 89, **Replace** the third paragraph of 204.02 with the following:

Use removed or excavated materials in the Work when the material conforms to the specifications; if not, then dispose of the material according to 105.16 and 105.17.

205.04.A

On page 113, **Replace** the second sentence of the third paragraph of 205.04.A with the following:

Control dust according to 107.19.

208

On page 119, **Replace** the section title of 208.10 with the following: **208.10 Cushion Blasting**

208.01

On page 119, **Replace** the last sentence of the second paragraph with the following:

Controlled blasting techniques include presplitting, cushion blasting, and sliver cut blasting.

208.10

On page 126, **Replace** the section title with the following: **208.10 Cushion Blasting.**

251.03

On page 136, **Replace** the last paragraph of 251.03 with the following:

If the Contract does not include resurfacing, seal the perimeter surface of the repaired area by applying a 2 inch (50mm) to 4 inch (100 mm) wide strip of approved 705.04 material or 702.01 approved PG binder.

255.07

On page 145, **Replace** the last paragraph of 255.07 with the following:

Seal the perimeter surface of the repaired areas by applying a 2 inch (50 mm) to 4 inch (100 mm) wide strip of approved 705.04 material or 702.01 approved PG binder.

255.08

On page 145, **Replace** the last paragraph of 255.08 with the following:

If maintaining traffic in adjacent lanes, schedule work in order to place the concrete in the prepared repair area within 48 hours after removing the existing pavement. In accordance with standard drawing MT-101.90, drums may be used as a separator to the adjacent traveled lane for repairs 60 feet or less in length. If unable to complete placement of the concrete in the exposed repair area by the end of the daily work shift, fill repair areas less than 4 feet from the traveled lane with a temporary patch material suitable to the Engineer or cover unfilled repair areas 10 feet (3 m) or less in length with a steel plate. Do not leave repair areas unfilled with concrete when work is suspended on weekends or holidays. If unable to complete placement of the concrete in the exposed repair area before suspending work for a weekend or holiday or within the time specified above, fill the excavation with an asphalt concrete mixture or other suitable temporary patch material with a durable surface as the Engineer directs. Maintain the temporary patches while they are in service.

256.08.

On page 148, **Replace** the entire section 256.08 with the following:

256.08 Curing and Opening to Traffic. Cure Type A patches according to 451.11, except allow the patch to attain a modulus of rupture of 400 pounds per square inch (2.8 MPa) before opening to traffic. Cure Types B and C patches according to the manufacturer's recommendations.

301.02

On page 155, **Replace** the second paragraph of 301.02 with the following:

Submit for the Laboratory's approval the desired percentage of the aggregate passing the No. 4 (4.75 mm) sieve and blend of individual components. The Contractor may use reclaimed asphalt concrete pavement according to 401.04. The Laboratory will establish the required binder content within a range of 4.7 to 7 percent. Do not make changes in these JMF values due to unsatisfactory results or other conditions except as authorized by the Laboratory. Obtain a new JMF approval for any desired change to an existing JMF.

301.04

On page 155, **Replace** 301.04 with the following:

301.04 Spreading and Finishing. Ensure that the maximum compacted depth of any one layer is 6 inches (150 mm). Ensure that the temperature of the mixture when delivered to the paver is a minimum of 250 °F (120 °C). Ensure the temperature of the mixture is sufficient for the roller coverage to be effective in compacting the mixture.

302.02

On page 157, **Replace** the third, fourth and fifth paragraph of 302.02 with the following:

The Contractor may use reclaimed asphalt concrete pavement according to 401.04. Should problems with proper coating or other material issues related to the use of reclaimed asphalt concrete pavement or reclaimed asphalt shingles be evident, the Laboratory may restrict the allowable percentage of reclaimed asphalt concrete pavement to the reduced limits shown in tables 401.04-1

and 401.04-2 or may eliminate use of reclaimed asphalt shingles. In this case the virgin binder content will be adjusted by the Laboratory.

Add hydrated lime in the dry form at a rate of 0.75 percent by the dry weight of aggregate for asphalt concrete base, if antistrip additive is required and hydrated lime is used.

Design the asphalt concrete base to yield 4.0 percent air voids and the following properties:

Property	Acceptable Range of Values	
	Minimum	**Maximum**
Binder Content, %	Note 1	6.0[Total]
Stability, lb (N), 70 blow	3000 (13,345)	--
Flow, 0.25 mm, 70 blow	--	28
Voids in Mineral Aggregate % Note 1: See Tables in 401.04	12.0	--

302.04

On page 158, **Replace** 302.04 with the following:

302.04 Spreading and Finishing. Ensure that the compacted depth of any one layer is a minimum of 4 inches (100 mm) and a maximum of 7.75 inches (190 mm). Ensure that the temperature of the mixture when delivered to the paver is a minimum of 250 °F (120 °C). Ensure the temperature of the mixture is sufficient for the roller coverage to be effective in compacting the mixture.

401.17

On page 181, **Add** the following after the 1st paragraph of 401.17:

Construct longitudinal joints using string line or other controls as a point of reference to provide a straight longitudinal joint. Prior to placing adjacent pavement, trim any locations along the longitudinal joint that deviate horizontally from the point of reference. Maintain a consistent overlap of 1 inch to 1 ½ inches on adjacent pavement when closing longitudinal joints.

402.03

Beginning on page 183, Replace the first two paragraphs of 402.03 with the following:

402.03 Polymer Binders. If an asphalt binder is modified by SBR at an asphalt concrete mixing plant, equip the plant with an automated SBR flow control and monitoring system. Obtain the Department's approval of the system before operating and demonstrate the system calibration to the District. If the District waives the demonstration, provide a letter documenting calibration data for the flow system to the DET for each project. Obtain written approval from the Laboratory for the use of SBR and ensure the QCP contains methods for properly controlling and sampling SBR binder blends.

For drum mix plants, introduce the SBR directly into the asphalt binder line through means of an in-line motionless blender or other device approved by the Laboratory which is able to provide a homogeneous blend. Ensure the in-line motionless blender design provides aggressive interaction of asphalt binder and SBR emulsion to provide a homogenous blend at the sampling port. Some blenders such as 'swirl' type blenders do not accomplish proper blending. The Astec in line SBR blender or similar design accomplishes proper blending. Locate a sampling valve between the in-line blender and the plant drum, at least 12 ft (3 m) downstream of the in-line blender and at least 5

ft (1 m) downstream of a piping elbow. Ensure the sampling valve port is at least 1 in. (2.54cm) in diameter. Ensure the sampling valve can be opened quickly for maximizing sample flow for the purpose of obtaining a proper sample. In place of an in-line sampling valve, a sample may be taken from a 3-5 gallon (11-19 liter) surge tank as long as the tank is downstream of the required blender and the in-line flow can be quickly and directly diverted to the surge tank. Contents of the tank should be drained into a 5 gallon (19 liter) sampling bucket and stirred before filling the required sample container. Provide a sampling valve port that is in a position to safely obtain the required sample volume in the required 5 gallon (19 liter) sampling bucket. Provide a stable sampling rack to obtain a sample.

402.04

On page 184, **Replace** Item 2 in the first paragraph of 402.04 with the following:

2. Injection equipment has variable water injection control controlled by the plant operation rate and the water injection can never exceed 2.2 percent by weight of asphalt binder.

403.03

On page 185, **Replace** the entire subsection 403.03 with the following:

403.03 Quality Control Program (QCP). Create and implement a Quality Control Program (QCP) for each paving season. The QCP will cover processes conducted to provide an asphalt mixture at the paving site that is uniform in composition, conforms to the specification requirements and that when placed is free of any defect (ex. segregation, lack of mixture and texture uniformity, raveling, rutting, holes, debris etc.) within the Contractor's control at project completion. A minimum of 3 weeks before mix production, but no later than February 28, submit a hard copy of the proposed QCP to the Laboratory for review and approval.

Send a hard copy and a digital copy (if available) of the approval letter and approved QCP to the DET in every District in which work is performed. Keep copies of the approval letter and the approved QCP in each Contractor plant laboratory and plant operation control room. Digital copies of the approved QCP and approval letter in pdf format are allowed in each Contractor plant laboratory and plant operation control room with the following requirements: The file icon must be appropriately labeled and be on the computer desktop of a computer in each area, the QCP must contain a Table Of Contents inside the front cover locating all sections by page number and the QCP must be page numbered, and out of date QCPs must be removed from the computer desktop.

Failure to comply with the approved QCP may result in removal of personnel in accordance with Supplement 1041, removal from VA, and adversely affect the Contractor's Prequalification rating.

The QCP is a reflection of a Contractor's sincerity and ability in producing a quality product. Development of this program beyond the minimum requirements specified below is encouraged and is taken into consideration by the QCQC when reviewing Contractor plant operation for qualification for VA.

Include in the program:

A. The assignment of quality control responsibilities. Quality control includes all efforts required to achieve a product meeting specifications. The QCP will list individuals as required below and note their designated responsibilities to meet QCP requirements. Provide a Quality Control Manager holding a Supplement 1041 Level 3 approval and who is a company employee. Assign Level 2 technicians for all Level 2 QC testing duties, and provide a list designating their responsibilities and expected actions. Ensure only approved personnel handle and test samples at all times. If Level 2 consultant technicians are used provide a document in the QCP and to them listing designated

responsibilities and expected actions (if different from employee expectations). Define in the QCP who is responsible at plants and specific methods for assuring haul vehicles meet all requirements and proper bed release products are used. Provide a Field Quality Control Supervisor (FQCS), holding Supplement 1041 Field Quality Control Supervisor approval and who is a company employee, who is routinely and usually at the paving site during placement of any non-temporary asphalt concrete pavement. Ensure personnel obtaining and handling cores at the project site are approved Level 2 technicians, FQCS or personnel approved by the Laboratory.

B. Provisions to meet the Department mix specifications.

C. Procedures for extra testing (e.g., job start, responses to poor test results or field mix problems, aggregate stock testing, reclaimed asphalt concrete pavement checks, moistures) and any other testing necessary to control materials not already defined in these Specifications.

D. Methods to maintain all worksheets, including all handwritten records, and other test and sample records from the plant or project for the duration of the contract or 5 years, whichever is longer. Define the test record process. Define company records retention requirements. Provide copies of all test reports and forms used in the quality control process.

E. Procedures for equipment calibration and documentation for Level 2 lab equipment. Provide documentation that all Level 2 lab equipment has been calibrated at the time of the Level 2 lab approval inspection. Procedures for calibration record storage.

F. Method of Quick Calibration and documentation for each plant type.

G. Procedure for random sampling to be used at the plant and documentation method. Procedures for sample taking, tracking, handling and documentation method for all samples taken at the project paving site including taking of all cores used for density determination or density gauge correlation.

H. All procedures to meet the processing, testing and documentation requirements for RAP and RAS in 401.04 including test forms, record keeping, technician responsibilities, etc.

I. Procedure for ensuring that every Contractor employee involved in the testing of asphalt mix and operation of the asphalt plant facility has read the QCP and has on site access to all applicable Department specifications, proposals, policies, and the current approved JMF.

J. Means to meet the handling and storage requirements of 402.03 and asphalt binder suppliers for all asphalt binders.

K. Means to meet delivered mixture uniformity/coating and hauling/trucking requirements.

L. Define the roles and responsibilities of the Field Quality Control Supervisors. List approved Field Quality Control Supervisors.

M. Signature of the Quality Assurance Manager and, if different, the person in authority to enforce all operations covered by the QCP as outlined in this subsection.

N. Specify in the QCP warning bands to be used by technicians for all tests and give specific instruction how they will be used for tests in concert with Table 441.10-1 specification requirements.

421.04

On page 208, **Replace** 421.04 with the following:

421.04 Weather Limitations. Apply the mixture only when it is not raining and the existing pavement surface and atmospheric temperature is a minimum of 45 degrees and rising and there is no forecast of an atmospheric temperature below 32 degrees within 24 hours from the time the mixture is applied. Between September 30 and May 1, do not apply the mixture if the existing pavement surface temperature is less than 50 °F (10 °C).

421.08

On page 209, **Replace** the entire subsection 421.08 with the following:

421.08 Surface Preparation. Before applying the mixture, thoroughly clean the surface.

Remove raised pavement markers according to 621.08, when specified. The Contractor may fill the depression caused by the removal of the casting with material meeting this specification.

Remove any existing pavement markings, except 740.02 (traffic paint), using an abrasion method conforming to 614.11.G.

Apply a tack coat conforming to Item 407, consisting of one part asphalt emulsion and three parts water. Apply the tack coat at a rate of 0.06 to 0.12 gallon per square yard (0.25 to 0.45 L/m²).

Protect drainage structures, monument boxes, water valve, etc. during material application.

421.10

On page 210, **Replace** the third and fourth paragraphs of 421.10 with the following:

If a leveling course and a surface course are specified, apply the paving mixture at 14 ± 2 pounds per square yard (7.6 ± 1.1 kg/m²) for the leveling course and 16 ±1 pounds per square yard (8.7 ± 0.6 kg/m²) for the surface course. Apply the two courses at a minimum combined rate of 30 pounds per square yard (16.3 kg/m²), regardless of the above tolerances

If a surface course is specified and it is not placed on another Microsurfacing course, apply the paving mixture at a minimum of 18 pounds per square yard (9.8 kg/m²).

421.10

On page 210, **Add** the following to the end of the seventh paragraph of 421.10:

Provide uniform appearance of the entire surface area regardless of the means used to spread material.

421.13

On page 211, **Replace** the second paragraph of 421.11 with the following:

The cost of any removal of any existing pavement markings according to 421.08 is incidental to Microsurfacing.

422.02 Materials

On page 212, **Replace** the 1st full paragraph with the following:

Use polymer emulsified binder conforming to 702.16 Type A.

422.04

On page 214, **Replace** the entire section 422.04 with the following:

422.04 Weather Limitations. Place the chip seal when the pavement temperature is between 60 °F (16 °C) and 140 °F (60 °C). Do not schedule the performance of this work for the time period before May 1 or after September 1. Do not place chip seal if any of the following conditions exist:

A. The atmospheric temperature is below 70 °F (21 °C).

B. Impending weather conditions do not allow for proper curing.

C. If temperatures are forecasted below 50 °F (10 °C) within 24 hours from the time of work.

422.06

On page 215, **Replace** the 2nd paragraph of 422.06 with the following:

Remove all existing pavement markings, except 740.02 (traffic paint), using an abrasion method conforming to 614.11,G.

442.02

On page 238, **Replace** the first paragraph of 442.02 with the following:

442.02 Type A Mix Design. Design the mixture composition for a Type A mix according to 441.02 and the most recent *Asphalt Institute Superpave Mix Design Manual* (SP-2) for design procedures and material properties except as modified by this subsection. Include in the JMF submittal the standard Department cover and summary page; all printouts from the gyratory compactor (all gyratory points not necessary); and analysis covering the required mix properties. Unless otherwise directed submit one compacted gyratory sample and loose mix for compaction of another sample, in addition to a 5-pound (2000 g) loose sample, for each JMF.

446.05

Starting on page 247, **Replace** the 6th, 7th, and 8th paragraphs of 446.05 with the following:

For each Lot three cores will be taken as follows from cold longitudinal joints and seven cores will be taken from the mat not including the joints. If locations not according to this specification are given, immediately inform the Engineer. Do not take cores from ramp joints. Take joint cores from the first, last and randomly from one of the three middle sublots. Determine the longitudinal location of the joint core within the sublot randomly and also randomly determine whether or not the cold longitudinal joint core is to be taken from a confined or unconfined joint if both exist in the mat to be cored. Do not take cores on the sloped face of a wedge before the adjoining lane is placed. Take joint cores such that the core's closest edge is six inches (150 mm) from the edge of the joint upper notch of a wedge joint or 4 inches (100 mm) from the edge of a vertical face joint. If a nine inch or wider wedge joint is used take the core three inches from the upper wedge joint notch. Take the seven random mat cores that are not for the joint coring such that the core's closest edge is at least twelve inches from the cold longitudinal joint wedge joint upper notch or vertical face edge. If taken, locate cores for the Contractor's quality control (QC sister core) longitudinally from and within four inches (100 mm) of the random core. In addition to the QC sister cores, three extra cores may be taken from the first lot of a JMF for testing to correlate density gauges. Do not take additional cores beyond what is noted above unless clearly identified in the approved Contractor's QCP. Clearly label all cores with mat locations so that they may be readily identified. Any unlabeled cores may be destroyed by the Department. Notify the Laboratory if any questions arise. Do not store additional cores anywhere (project, in vehicles or at the plant) beyond what are required to be taken for testing. Test all Contractor QC cores and maintain records of all tests (core tests and correlated gauge tests) per the QCP. Destroy all cores immediately after testing is complete.

The Department will determine the pay factor for each Lot cored by the pay schedule in Table 446.05-1 for Lots with three cold longitudinal joint cores and Table 446.05-2 for Lots with less than three cold longitudinal joint cores. The Department will verify the MTD if the MSG determination has a deviation from the MTD of less than or equal to 0.020. If the MTD is not verified, establish a new MTD according to the procedures established in 441.09. If less than 10 cores are available for determining the mean, the Laboratory will determine disposition of the Lot.

Fill core holes by the next workday with asphalt concrete. Before filling, ensure the holes are dry and tack them with asphalt material conforming to 407.02. Properly compact the asphalt concrete used for filling the hole and leave it flush with the pavement.

451.09

Starting on page 256, **Replace** the entire subsection **451.09 Joints** with the following:

451.09 Joints. Unless otherwise directed, construct all transverse joints normal to the centerline of the pavement lane and of the type, dimensions, and at locations specified.

Determine contraction and longitudinal joint sawing time limits to protect the concrete from early cracking by using HIPERPAV software. Obtain the software according to Supplement 1033.

Twenty four (24) hours before placing concrete pavement create a HIPERPAV project date file according to Supplement 1033.

Provide the completed file and the printout to the Engineer. When HIPERPAV predicts early age slab cracking will occur, whether due to standard construction practices, joint sawing methods, mix design or curing, either do not start construction until modifications have been made to eliminate HIPERPAV's predicted slab cracking or do not pave.

Perform a HIPERPAV analysis for each pour.

If software analysis determines joint sawing could exceed twenty four (24) hours, assure all joints are sawed by the 24th hour.

A HIPERPAV analysis showing paving can proceed does not eliminate the requirements of 451.17.

Accurately mark the correct locations of all joints that will be saw cut along both edges of the pavement. Ensure the method of marking remains clearly visible after the paver passes and until the joint saw cut is completed.

A. Longitudinal Joint. Construct longitudinal joints between simultaneously placed lanes by sawing.

When a standard (water cooled diamond bladed) concrete saw is used to make the longitudinal joint between simultaneously placed lanes, saw the joint within the timeframe provided in the HIPERPAV output. For pavement less than or equal to 10 inches (255 mm), saw the joint to a minimum depth of one-fourth the specified pavement thickness. For pavements greater than 10 inches (255 mm) thick, saw the joint to a minimum depth of one-third the specified pavement thickness. Saw joints 1/4 ± 1/16 inch (6 ± 1.6 mm) wide measured at the time of sawing.

When using early-entry (dry cut, light weight) saws to make the longitudinal joint between simultaneously placed lanes, only use saw blades and skid plates as recommended by the saw manufacturer for the coarse aggregate type being used in the concrete. Perform the early-entry sawing after initial set and before final set. Saw the joint 1/8 inch (3 mm) wide and 2 1/4 to 2 1/2 inches (56 to 63 mm) deep.

Place deformed epoxy coated steel tiebars or the epoxy coated hook bolt alternate (wiggle bolt) with epoxy coated coupling, in longitudinal joints during consolidation of the concrete. Install them at mid-depth in the slab by approved mechanical equipment. As an alternate procedure, rigidly secure them on chairs or other approved supports to prevent displacement. Provide tie bars or wiggle bolts of the size and spaced as shown on the standard construction drawings. If used, securely fasten hook bolts or wiggle bolts with couplings to the form at the longitudinal construction joint as shown on the standard construction drawings.

B. Transverse Joints

Unless otherwise directed, construct all transverse joints normal to the centerline of the pavement lane and of the type, dimensions, and at locations specified.

For all transverse joints, install round, straight, smooth, steel dowel bars of the size shown in Table 451.09-1.

TABLE 451.09-1 DOWEL SIZE	
Thickness of Pavement (T)	**Diameter of Steel Dowel**
Less than 8 1/2 inches (215 mm)	1 inch (25 mm)
8 1/2 to 10 inches (215 to 255 mm)	1 1/4 inches (32 mm)
Over 10 inches (255 mm)	1 1/2 inches (38 mm) or as shown on the plans

Within 2 hours prior of placing concrete coat the full length of all dowels with a thin uniform coat of new light form oil as a bond-breaking material.

Load Transfer Assemblies.

Use load transfer (dowel basket) assemblies in transverse contraction joints conforming to and placed according to the standard drawings to hold the dowels in a position parallel to the surface and centerline of the slab at mid-depth of the slab thickness.

Preset all dowel basket assemblies before the day's paving unless the Engineer determines complete presetting is impractical.

Completely install dowel basket assemblies before shipping and spacer wires are removed.

Immediately before paving, remove all shipping and spacer wires from the dowel basket assemblies; check the dowel basket assemblies are held firmly in place; check the dowels are parallel to the grade and parallel to centerline of pavement.

For each joint assembly used to hold dowels in position, provide a continuous assembly between longitudinal joints or between the longitudinal joint and pavement edge. Drive at least eight 1/2-inch (13 mm) diameter steel pins a minimum of 18 inches (460 mm) long at an angle to brace the assembly from lateral and vertical displacements during the placing of concrete. Drive two of these pins opposite each other at each end of the assembly, and drive the remaining pins in staggered positions on each side of the assembly. Where it is impractical to use the 18-inch (460 mm) length pins, such as where hardpan or rock is encountered, and provided the assembly is held firmly, the Engineer may authorize use of shorter pins. Where the dowel basket assembly is placed on granular material that may allow settlement or distortion, anchor the assembly with a combination of pins and steel plates, or by some other means satisfactory to the Engineer to prevent settlement.

When concrete pavement is placed on an existing concrete pavement or on a stabilized base, secure dowel basket assemblies from lateral and vertical displacement during concrete placement using power-driven fasteners and appropriate clips or pins driven in predrilled holes of a diameter slightly less than the pin diameter. Use either of the above methods or a combination of the two in sufficient numbers to adequately secure the basket assemblies.

Where widths other than 12 feet (3.6 m) are specified, the Contractor may use standard dowel basket assemblies with dowel spacings adjusted as follows. Maintain 6-inch (150 mm) dowel spacing at the longitudinal joint and increase the spacing at the outer edge of the lane up to 12 inches (300 mm). Where an odd width of lane occurs and if the standard dowel basket assembly would provide for a space exceeding 12 inches (300 m), place a dowel 6 inches (150 mm) from the outer edge of the lane). Hold such a dowel rigidly in proper position by a method satisfactory to the Engineer or cut and splice a dowel basket assembly of greater length than required to attain the required length.

Slip Form Paver with Mechanical Dowel Bar Inserter.

The Contractor may propose to use a slip form paver with mechanical dowel bar inserter (DBI) to place dowels in transverse contraction joints the full thickness of pavement and spaced per the requirements of the standard construction drawings. Submit details and specifications of the

proposed equipment to the Engineer at least 14 calendar days prior to mobilizing the equipment to the project.

The use of any slip form paver with DBI is allowed only after acceptable performance is demonstrated with a test section and approved by the Engineer. Continued verification during all contract paving is required for each production day as detailed below.

Provide all equipment, perform all testing, and evaluate the slip form paver with DBI as detailed in the following sections.

1. MIT Scan-2 Equipment and Reporting

Provide MIT Scan-2 equipment to determine the location of dowel bars in either fresh or hardened concrete including horizontal translation, longitudinal translation, vertical translation, horizontal skew, vertical tilt, and cover.

Provide equipment for determining dowel bar alignment that has an onboard computer that runs the test; collects and stores the test data on a memory card; performs the preliminary evaluation; and provides a printout of results immediately after scanning. Provide MagnoProof software to provide a detailed report of all required alignment parameters in an Excel spreadsheet and a graphical color representation.

Ensure the equipment is properly calibrated conforming to the manufacturer's specifications and for the specific project conditions. Provide calibration documentation to the Engineer prior to the start of construction. Establish a standard protocol for scanning direction.

Provide trained personnel to operate the equipment and documentation of training prior to start of construction.

Provide a print out, at the time of scanning, for horizontal translation, longitudinal translation, vertical translation, horizontal skew, vertical tilt, and cover for each bar in each joint scanned. For each Test Section and daily, for each day of production, provide a complete report to the Engineer at the completion of scanning along with a digital copy of all data collected in the manufacturer's native file format as well as all calibration files. Include the standard report generated using the MagnoProof software in Excel format and with color graphical representation of each joint. Include in the report project contract number, county-route-section, placement date, scan date, station location and lane, joint ID number, name of operator, and all required alignment parameters.

If non-magnetic dowel bar materials are to be used, propose and demonstrate alternative measurement equipment to the Engineer showing capability to provide measures equal or similar to the acceptance and rejection criteria of Table 451.09-2. Obtain the Engineer's approval of alternative equipment prior to paving. If no alternative equipment can demonstrate the required capability, do not use the slip form paver with DBI.

Prior to paving, review the measurement equipment applicability for the project conditions with the Engineer, including: ambient moisture conditions, dowel material, metallic concrete aggregate and potential contributors to magnetic interference (presence of tiebars, reinforcing steel or other embedded or underlying steel items that may affect measurement accuracy). Establish how the measurement device can meet the project conditions. If the measurement device cannot meet the project conditions, do not use the slip form paver with DBI.

2. Acceptance/Rejection

The required dowel bar tolerances are given in Table 451.09-2. Dowel bar alignment is measured as detailed below. Any dowel bar exceeding any Acceptance Tolerance in Table 451.09-2 is considered misaligned. Rejection Criteria is in absolute inches.

Table 451.09-2
Individual Dowel Bar Alignment Tolerances

Alignment Parameter	Acceptance Tolerance (inches)	Rejection Criteria (inches)
Horizontal Translation [a]	±2.0	±3.0
Longitudinal Translation [b]	±2.0	±4.0
Vertical Translation [c]	±1.0	± T/6
Horizontal Skew [d]	±0.60	±1.0
Vertical Tilt [e]	±0.60	±1.0
Cover [f]	-	2.5 minimum

a. Horizontal Translation - the total difference, measured horizontally, between the actual dowel bar location and the plan required dowel bar location along the transverse contraction joint.
b. Longitudinal Translation - the total difference, measured in the longitudinal direction, from the center of the transverse contraction joint to the actual dowel bar center. Also termed as "side shift".
c. Vertical Translation - the total difference, measured vertically, between the centerline of the actual dowel bar location and the mid-depth of the slab. (T = Pavement Thickness in inches)
d. Horizontal Skew - the total difference, measured from end to end of a dowel bar, of the dowel in the horizontal plane.
e. Vertical Tilt - the total difference, measured from end to end of a dowel bar, of the dowel bar in the vertical plane.
f. Cover - the least distance between the surface of embedded reinforcement and the outer surface of the concrete.

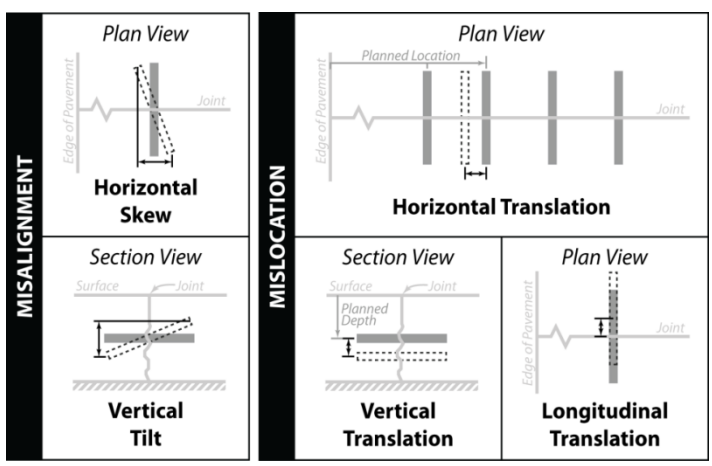

Perform a Joint Score Analysis conforming to CPTP Tech Brief *Best Practices for Dowel Placement Tolerances* (FHWA-HIF-07-021) for every joint. Joint Score is a measure of the combined effects of horizontal skew and vertical tilt. To calculate the Joint Score: calculate the Single Dowel Misalignment (SDM) by the square root of the sum of the squares of the Horizontal Skew and Vertical Tilt of each dowel in the joint; determine the weighing factor (W) for each bar from Table 451.09-3; sum the W values for every dowel in the joint and add one (1).

$$Single\ Dowel\ Misalignment\ (SDM) = \sqrt{(Horizontal\ Skew)^2 + (Vertical\ Tilt)^2}$$

Joint Score (JS) – Evaluated for a single transverse joint between adjacent longitudinal joint(s) and/or pavement edge(s) (i.e., a typical 12 ft [3.6 m] standard lane or up to 14 ft [4.3 m] widened lane), and calculated as:

$$Joint\ Score\ (JS) = 1 + \sum_{i=1}^{n} W_i$$

where:

n = number of dowels in the single joint

W_i = weighting factor (Table 451.09-3) for dowel i

Table 451.09-3	
Weighting Factors in Joint Score (JS) Determination	
Single Dowel Misalignment (SDM)	W, Weighting Factor
SDM ≤ 0.6 in. (15 mm)	0
0.6 in. (15 mm) < SDM ≤ 0.8 in. (20 mm)	2
0.8 in. (20 mm) < SDM ≤ 1 in. (25 mm)	4
1 in. (25 mm) < SDM ≤ 1.5 in. (38 mm)	5
1.5 in. (38 mm) < SDM	10

Joint Score Trigger (JST) – A scaling of the Joint Score risk value to account for the actual number of dowels required in a single joint for pavement width other than 12 ft (3.6 m), calculated as:

$$Joint\ Score\ Trigger\ (JST) = 10 * \frac{\#\ of\ Dowel\ Bars\ in\ Single\ Joint}{12}$$

Include the Joint Score and Joint Score Trigger for every joint scanned in the report to the Engineer. Any joint with a Joint Score equal to or greater than the Joint Score Trigger is considered locked and rejectable.

3. Test Section

Prior to production use of a DBI slip form paver, perform at least a 500-foot (150 m) long test section for acceptance of the machine. Measure the alignment and location of each dowel bar in the test section using the MIT Scan-2. The test section will be considered acceptable if the following acceptance criteria are met:

1. Each Joint Score (JS) is less than Joint Score Trigger (JST);
2. Ninety percent (90%) of the dowel bars meet the Acceptance Tolerances of Table 451.09-2;
3. None of the dowels exceed the Rejection Tolerances of 451.09-2.

If the test section acceptance criteria is not met, use the data to refine the paving process and reduce/eliminate misalignments and mislocations. Modify, repair or replace any slip form paver with DBI that does not meet the acceptance criteria and perform another test section. Do not begin production paving until the slip form paver with DBI test section acceptance criteria is met.

Perform corrective action of all joints in the test section according to Section 5 below.

Perform a new test section for any new slip form paver with DBI that will be used for any contract item of work.

Perform a new test section at the beginning of every construction season; after major paver maintenance/repairs; at mobilization or remobilization to a project, for major concrete mix design changes or different concrete mix designs; and as required by Section 4 of this specification.

If the length of the section to be paved makes it unreasonable to perform the test section, scan all joints for conformance with the requirements of Section 2, Acceptance/Rejection. Correct any joints with dowels found to be rejectable or JS greater than JST according to Section 5, Corrective Action.

Determine during the test section if embedded tiebars are affecting the Rejection Tolerances and JS's. If the test section demonstration shows interference, exclude from the JS and JST calculations any dowel bar(s) closer than 12 in. (300 mm) in any direction to tiebars in the longitudinal joint(s). At the Engineer's discretion, establish the location of excluded dowels by another equivalent non-destructive method or by probing.

4. Paving Quality Control Testing (QCT) for Dowel Bar Inserters

When using the accepted slip form paver and DBI for any contract item of work, perform quality control scans with the MIT-Scan 2 equipment at the following minimum:

a. Measure the alignments and location for every 10th joint and calculate the JS and JST for each measured joint. Acceptable QCT is when all measures are within the acceptance tolerances in Table 451.09-2 and JS is less than JST.

i. When the daily QCT finds more than 10 percent of the joints scanned have dowels exceeding the acceptance tolerances of Table 451.09-2 but the JS is less than the JST, increase the scanning frequency to every 5th joint. Evaluate the paving process to reduce/eliminate misalignments and mislocations and continue to pave. The QCT frequency will revert back to every 10th joint when two consecutive days of scanning every 5th joint show no dowels exceeding the acceptance tolerances of Table 451.09-2 and all JSs are less than the JST.

ii. When QCT finds any individual dowel bars exceeding the rejection criteria of Table 451.09-2 or the JS is found to exceed the JST, the joint is considered to be locked and immediate investigation needs to be made as follows:

1. Scan joints in front and behind the locked joint location until five (5) consecutive joints in both directions are found with no dowel bars exceeding the rejection criteria of Table 451.09-2 and no JS is found to exceed the JST.
2. If the additional scanned joints show no additional dowel bars exceeding the rejection criteria of Table 451.09-2 and no JS exceeding the JST, evaluate equipment to determine what caused the original problem. Before continuing paving increase the frequency of QCT to conform to 4.a.i.
3. If the additional scanned joints show additional dowel bars exceeding rejection criteria of Table 451.09-2 or joints with a JS exceeding the JST, stop paving. Investigate to determine the cause of the dowel bar rejection issues and provide the causes and alternative corrections to the Engineer.

   The Engineer will determine if the corrections will correct the problem and may allow paving to temporarily continue to validate if the corrections work. During any evaluation, scan all joints to determine if the corrections were successful. If successful, continue QCT scanning at the frequency of 4.a.i. If not successful, discontinue paving, repair or replace the slip form paver and DBI, and repeat the Test Section

b. All dowel bars found beyond rejection criteria of Table 451.09-2 or joints with a JS exceeding the JST require a corrective action proposal conforming to Section 5, Corrective Action.

Provide report formats as described in Section 1, MIT Scan-2 Equipment and Reporting.

5. Corrective Action

Submit a proposal for corrective action to the Engineer for any dowel that exceeds the rejection criteria in Table 451.09-2 or any joint that has a JS greater than the JST. As a minimum, include the following in the corrective action proposal:

1. Locations of rejectable dowels with identification information as described in Section 1, MIT Scan-2 Equipment and Reporting.
2. Locked joint identification information as described in Section 1, MIT Scan-2 Equipment and Reporting.
3. Proposed method of remediation for each identified location, including supporting documentation of the effectiveness of the means of proposed remediation.

The Department may not require corrective action for random dowels that exceed the rejection criteria of Table 451.09-2 depending on location; what alignment parameter was the cause for the rejection; and the frequency of the rejectable dowels.

The Department may not require corrective action for all JS exceeding the JST, if they are random in nature. Up to two (2) consecutive joints with a JS exceeding the JST may be accepted, provided that the adjacent three (3) joints before or after do not have dowels exceeding Table 451.09-2 rejection limits and have JS's less than the JST. The Department will require corrective action where there are more than two (2) consecutive joints with a JS exceeding the JST.

Do not proceed with any corrective action until the Engineer approves the proposed method(s) of correction.

C. Expansion Joints. Where a pressure relief joint is not provided adjacent to a bridge structure, construct expansion joints at the first two regularly spaced joint locations adjacent to the bridge approach slab on each side of the bridge. If the pavement is constructed in two or more separately placed lanes, construct the transverse expansion joints in a continuous line for the full width of the pavement and shoulders.

Construct expansion joints according to the standard construction drawings. Install the face of the expansion joint perpendicular to the concrete surface except when expansion joint is installed at a skewed bridge approach slab.

Use round, straight, smooth, steel dowels, and within 2 hours of placing concrete, coat the dowels with a thin uniform coat of new light form oil as a bond-breaking material to provide free movement. After coating the dowel, install a sleeve of metal or other approved material approximately 3 inches (75 mm) long, with crimped end, overlapping seams fitting closely around the dowel, and a depression or interior projection to stop the dowel a sufficient distance from the crimped end to allow 1 inch (25 mm) for longitudinal dowel movement with pavement expansion on one free end of each dowel. If approved by the Engineer, use other means to allow for 1 inch (25 mm) of expansion.

Punch or drill proper size dowel holes into the preformed expansion joint filler to assure a tight fit around each dowel.

Form a 1-inch (25 mm) wide and 1-inch (25 mm) deep opening on top of the expansion joint filler and seal this opening with 705.04 joint sealers.

D. Contraction Joints. For pavement less than or equal to 10 inches (225 mm) thick, saw contraction joints with a standard (water cooled diamond bladed) concrete saw to a minimum depth of one-fourth of the specified pavement thickness. For pavement greater than 10-inches (255 mm) thick, saw contraction joints to a minimum depth of one-third the specified pavement thickness. When cutting joints using a standard (water cooled diamond blade) saw assure the joint is 1/4 ± 1/16-inch (6 ± 1.6 mm) wide when measured at the time of sawing.

When using the option of early-entry (dry cut, light weight) saws, only use saw blades and skid plates as recommended by the saw manufacturer for the coarse aggregate type being used in the concrete. Perform the early entry contraction joint sawing after initial set and before final set. Saw

the contraction joint 2-1/4 to 2-1/2-inches (56 to 63 mm) deep. Ensure any early entry saw joints are approximately 1/8-inch (3 mm) wide at the time of sawing.

If the pavement is constructed in two or more separately placed lanes, install the joints continuous for the full width of the pavement. Saw the pavement with sawing equipment approved by the Engineer as soon as the saw can be operated without damaging the concrete. Provide saws with adequate guides, blade guards, and a method of controlling the depth of cut. After wet sawing, clean the joint using a jet of water. After dry sawing clean the joint using air under pressure. During sawing of contraction joints, maintain a standby saw in working condition with an adequate supply of blades.

E. Construction Joints. Install dowelled construction joints at the end of each day's work and when work is suspended for a period of more than 30 minutes.

Use dowels in transverse construction joints. Within 2 hours of placing concrete, coat the free half of all dowels with a thin uniform coat of new light form oil. Use an adequate bulkhead, with openings provided for dowel bars spaced as specified and shaped to fit the typical section of the pavement, to form a straight joint. During placing of concrete, hold dowels rigidly in position.

Locate construction joints at or between contraction joints. If located between contraction joints, construct the construction joint no closer than 10 feet (3 m) to the last contraction joint.

451.10

On page 264, **Replace** paragraph 3and 4 with the following two paragraphs:

Texture the surface in the longitudinal or transverse direction using a broom to produce a uniform, gritty, texture. Immediately following the broom drag texture, tine the pavement in the longitudinal direction using an approved device that produces uniform tine spacing 3/4 inches wide (19 mm), 1/8 inch deep (3 mm) and 1/8 inch wide (3 mm). Do not tine within 3 inches (75 mm) of pavement edges or longitudinal joints. Only use equipment that will tine the full width of the pavement in one operation and uses string line controls for line and grade to assure straight tining texture.

Use transverse tining in small areas only with the approval of the Engineer. Use equipment that produces a random pattern of grooves [0.05 inch (1.3 mm) to 0.08 inch (2.0 mm) deep and 0.10 inch (3 mm) wide] spaced at 3/8 to 1-3/4 inches (10 to 45 mm), with 50 percent of spacings less than 1 inch (25 mm). Transverse tining may be used as an option for shoulders of main line or shoulders of ramps and gore areas. Tine all mainline shoulders or all ramp shoulders in a consistent direction if choosing this option. Request the use of transverse tining and identify the locations for approval at the preconstruction meeting.

455.06

On page 282, **Replace** the third paragraph of 455.06 with the following:

When the actual work produced by the QCP does not conform to specification requirements, the Engineer will require modification of the QCP to return the work to conformance. When notified by the Engineer propose modifications to the QCP for acceptance. Do not continue work until the Engineer has either accepted the revised QCP or determined work can continue.

499.03 Concrete Mix Designs.

On page 284, Replace the first three paragraphs of 499.03 with the following:

499.03 Concrete Mix Designs. Develop concrete mix designs with 1 inch maximum nominal size coarse aggregate according to ACI 301, Section 4 meeting the requirements of Table 499.03-1.; Limit the pozzolan content of any developed mix designs according to Table 499.03-2. The design air for concrete with 1" nominal maximum size aggregate is 6%. Conform to the requirements and procedures of this specification and Supplement 1126 for concrete mix design submittals and approvals.

Only use mix designs accepted by the Department and issued a JMF number.

TABLE 499.03-1 CONCRETE MIX DESIGN REQUIREMENTS

Quantities per Cubic Yard (Cubic Meter) Provide Concrete with 6±2% Air Content				
Class	Design Strength psi (MPa)	Permeability [1] Maximum (Coulombs)	Cementitious Content [2] Minimum. lbs (kg)	Aggregate Requirements
QC 1	4,000 (28.0) at 28 days	2,000	520 (309)	Well-Graded
QC 2	4,500 (31.0) at 28 days	1,500	520 (309)	Well-Graded
QC 3 Special	As per plan	1,500 or as per plan	520 (309) or as per plan	Well-Graded
QC 4 Mass Concrete	4,000 (28.0) or as per plan [3]	2,000 or as per plan	470 (279) [4] [5] or as per plan	Well-Graded
QC MS [7]	See Supplement 1126	N/A	800 [7] (475)	1 inch nominal maximum size
QC FS [7]	See Supplement 1126	N/A	900 [7] (534)	1 inch nominal maximum size
QC MISC [6]	4,000 (28.0) at 28 days	N/A	550 [8] (326)	1 inch nominal maximum size

[1] AASHTO T277 Modified
[2] Cementitious Content includes cement and pozzolan materials, denoted as Cm
[3] Strength for Mass Concrete (QC 4) may be tested at either 28 or 56 days.
[4] Do not use Type III cement or accelerating admixtures in mass concrete.
[5] The maximum fly ash or GGBF slag content may be increased up to 50%.
[6] For QC MISC mixes only –Water/Cementitious ratio limited to 0.50 maximum
[7] Cement Only – No pozzolan materials
[8] Cement or a combination of cement and up to15% fly ash or up to 30% GGBF slag

Determine the permeability by testing according to AASHTO T277 except moist cure the permeability samples for 7 days at 73°F followed by 21 days of moist curing at 100°F. Perform permeability testing at 28 days.

499.08

On page 290, **Replace** the third and fourth paragraphs of 499.08 with the following:

When concrete is mixed using a truck mixer for complete mixing, mix each batch of concrete at the rotation rate designated on the mixer as mixing speed for not less than 70 revolutions of the

drum. Transport mixed concrete from the central mixers in truck mixers, truck agitators, or trucks having non-agitating bodies. Within 90 minutes after cement and water are combined, deliver and completely discharge concrete.

When concrete is delivered in transit mixers and before discharging any of a batch, the Engineer may allow adding water within the specified water-cement ratio limits. Perform sufficient mixing, a minimum of 30 revolutions at mixing speed, to adjust the slump and to regenerate the specified air content throughout the batch.

501.05.B

On page 295, after the fourth paragraph, and sentence **change** the first section to:

This section applies to working drawings for the following:

1. Cofferdams and Excavation Bracing, impacting active traffic, or with an exposed height over eight feet, except when a complete design is already shown in the plans. Perform all work as specified below:

a. Locate Cofferdams and Excavation Bracing according to the contract, if shown.
b. Maintain temporary horizontal and vertical clearances according to the contract.
c. Include the effects of AASHTO live and dead load surcharges as necessary.
d. Design Cofferdams and Excavation Bracing in accordance with the latest *AASHTO Guide Design Specifications for Bridge Temporary Works*, Section 4

506.01

On page 306, **change** the last sentence to:

When subsequent static load tests are specified, the Office of Geotechnical Engineering will determine whether subsequent static load tests are to be performed and the location of all piles to be tested

506.02

On page 306, in the second paragraph, **change** the last sentence to:

If the Contractor finds it necessary to use a different hammer, the Office of Geotechnical Engineering will determine if an additional static load test is necessary.

506.04

On page 309, **change** the first sentence of the first paragraph to:

If the Contractor subsequently finds it necessary to use a different hammer, the Office of Geotechnical Engineering will determine if an additional static load test is necessary; the Contractor shall complete any such additional test at no additional cost to the Department.

507.04

On page 310, **change** the eight paragraph to:

When using open ended diesel hammers, provide electronic equipment, such as a saximeter, or equivalent, for the Engineer's use to accurately measure and record the average stroke for each unit of length driven.

508.02

On page 316, after the third and last paragraph of this section, **add** the following sentence,

Inserts cast into prestressed members for the purposes of falsework support shall be galvanized according to 711.02 and shall be shown in the shop drawings according to 515.06.

511.05

On pages 325 and 326, **Replace** section 511.05, (delete the second paragraph), with the following:
Mix concrete according to 499.08.

511.07

On page 326, **Replace** the 2nd paragraph of 511.07 with the following:

Place and finish concrete to the lines and grades shown in the plans. Unless otherwise noted, the proposed beam seat elevations shown in the plans for prestressed beam superstructures are based on the design midspan camber for prestressed beams which are 30 days old (D30). Adjust each beam seat elevation using measured midspan camber data provided by the fabricator if available. In the absence of measured midspan camber, adjust each beam seat elevation using the following:

$\Delta Y = Dt - D30 \geq 0$

Where:

ΔY = Distance that each seat elevation shall be lowered from plan elevation to account for midspan camber growth rounded to the nearest 1/8-inch

$Dt = (1 + \psi)\ D0$

D30 = Design Midspan Camber at Day 30 provided in the plans; inch

D0 = Design Midspan Camber at Day 0 provided in the plans; inch

$\psi = 1.97\ KS\ KF\ KTD$

$KS = 1.45 - 0.13\ (V/S) \geq 1.0$

V/S = Ratio of the prestressed concrete member's volume-to-surface area exposed to the atmosphere. For each of the standard I-beam sections, this ratio is provided on PSID-1-13; inch

$KF = 5/(1 + f'ci)$

f'ci = Compressive strength of prestressed concrete at release provided in the plans; ksi

$KTD = t/(61 - 4\ f'ci + t)$

t = Age of prestressed concrete measured between release of prestressing force (i.e. 0.75 days) and time of deck placement; days

Provide the Engineer with revised plan sheets and Design Camber calculations or measured camber data signed, sealed and dated by an Ohio Registered Professional Engineer at least 7 days prior to constructing the beam seats. The revised plan sheets shall include the measured camber data (if available), Design Camber (Dt) and beam age (t) assumed for establishing the revised elevations. Provide haunch reinforcement for prestressed I-beam members as necessary to extend the beam's composite reinforcement at least two inches into the design deck thickness. All revisions resulting from adjusted beam seat elevations shall be clearly marked as revised. Do not begin work until the Engineer approves the revised plan.

511.09

On page 331, **Revise** the fourth paragraph to the following:

Form construction joints using bulkheads with keyways. Locate keyways clear of exposed surfaces by approximately one-third the thickness of the joint. Construct transverse or longitudinal construction joints in deck slabs with keys located between the reinforcing mats and having a depth of 3/4 inch (19 mm).

511.19

On page 339, **Revise** the 1th paragraph to:

After completing all curing operations and allowing the deck to thoroughly dry, seal the following areas with a high molecular weight methacrylate (HMWM) sealer. Flood the areas and squeegee off the excess material as specified in Item 512 before opening the deck to traffic:

511.24

On page 343, **Add** the following after the 1st paragraph of 511.24:

Work necessary to adjust seat elevations and deck haunches for prestressed beam members is incidental to the affected structural concrete items. The Department will pay for final quantities as measured and field verified.

512.03.F

On page 346, **Change** the second paragraph of 512.03.F to:

Use one of the following methods to produce a surface profile that feels and looks like 100 grit sandpaper or coarser. Provide the Engineer sandpaper for comparison. Perform the ASTM D7682-12, Method B, Standard Test Method for Replication and Measurement of Concrete Surface Profile Using Replica Putty to obtain a replica coupon of the prepared concrete surface on a flat, test section, on the first day of production, and as requested by the Engineer. With a micrometer, measure the surface profile obtained on the coupon, and provide the coupon to the Engineer.

1. Water blast at 7,000 psi (48 MPa) minimum, or
2. Abrasive blast, followed by air brooming or power sweeping, to remove dust from the surface and opened pores,
3. or use a combination of water blast and abrasive blast.

512.03.G.1.b

On page 347, **Change** 512.03.G.1.b to:

b. Provide documentation to the Engineer that the ambient, surface and material temperature is 50 ºF (10 ºC) or above, 5 ºF higher than the dew point, and the relative humidity is 80% or below during the application of the sealer.

513.03

On page 361, under the Level UF, Description of Capabilities, **change** the last sentence to:

Quality assurance of shop drawings, material test reports, and inspection according to Supplement 1078.

Under the Level 1, Description of Capabilities, **change** the last sentence to:

Quality assurance of shop drawings, material test reports, and inspection according to Supplement 1078.

Under the Level 2, Description of Capabilities, **change** the last sentence to:

Quality assurance of shop drawings, material test reports, and inspection according to Supplement 1078.

Under the Level 3, Description of Capabilities, **change** the last sentence to:

Quality assurance of shop drawings, material test reports, and inspection according to Supplement 1078.

Under the Level 4, Description of Capabilities, **change** the last sentence to:
Quality assurance of shop drawings, material test reports, and inspection according to Supplement 1078.

Under the Level 5, Description of Capabilities, **change** the last sentence to:
Quality assurance of shop drawings, material test reports, and inspection according to Supplement 1078.

Under the Level 6, Description of Capabilities, **change** the last sentence to:
Quality assurance of shop drawings, material test reports, and inspection according to Supplement 1078.

513.22

On page 372, in the third paragraph, **change** the last sentence to:
For galvanized structures with welded shear connectors, remove the galvanic coating by grinding at each connector prior to welding.

514.19

On page 396, **Revise** the first paragraph to:
(QCP #9). After the intermediate coat cures and before applying the finish coat, caulk gaps or crevices greater than 1/8 inch (3 mm). Allow for the cure of the caulk, per the Manufacturer's recommendations prior to the application of the finish coat.

515.08

On page 404, **add** the following material to the list:
Welded wire reinforcement……709.12

Change the last sentence to:
For gradation, use No. 6, 67, 68, 7, 78 or 8 size coarse aggregate.

515.14

On page 407, at the end of the section **add** the following paragraph:
Unless otherwise shown in the plans, do not install inserts or holes in the beam web within a distance of 1.5 times the beam height from the end of the beam.

515.15

On page 407, **change** B to:
B. W/c ratio (maximum = 0.40)

515.15

On page 408, **change** the 8th paragraph to:
Screed the top surface of composite members and finish the surface with a wire broom, in a transverse direction and penetrating the finished surface approximately 1/4 inch(6 mm) + 1/16 inch (1.5 mm) -1/8 inch (3 mm) at a maximum spacing of 1-1/2 inches (38 mm).

515.17

On page 411, **Replace** the Beam Sweep and Camber Tolerances table with the following:

Beam Sweep and Camber Tolerances

Description	Box Beam	I Beam
Horizontal Sweep	±1/8" per 10 ft (1 mm/m) max ±3/4" (19 mm)	±1/8" per 10 ft (1 mm/m) max ±1" (25 mm)
Max Gap between beam	1" (25 mm)	N/A
Deviation from Design camber (Dt) [1]	+ Sacrificial Haunch[2] or -1/8" per 10 ft (1 mm/m) max -1/2" (13 mm)	+ Sacrificial Haunch[2] or
Variation in camber between beams in same span	max 1/2" (13 mm)	N/A

[1] Design camber (Dt) calculated in accordance with 511.07.

[2] Unless otherwise noted, the Sacrificial Haunch thickness is 2”.

515.18

On page 411, **Add** the following after the 3rd paragraph of 515.18:

The Department will not accept for shipping, prestressed members with measured camber exceeding the Design Camber (Dt), used to establish the seat elevations, according to 511.07, by more than the Sacrificial Haunch thickness, until a corrective work plan has been approved by the Engineer. The plan shall be signed, sealed and dated by an Ohio Registered Engineer and shall include all revised plan information necessary to place the deck to the plan thickness. If the prestressed members are acceptable, exclusive of the deviation from Design Camber, the Department will pay for all costs incurred resulting from measured camber exceeding Design Camber calculated for the actual beam age at the time of deck placement, as Extra Work, 109.05.

516.07

On page 415, **change** the second paragraph to:

Accurately set, level and align elastomeric bearings, bearing plates and bolsters. Set bearing plates and bolsters on 1/8-inch (3 mm) thick sheet lead conforming to 711.19.

523.04

On page 430, **change** the last sentence to:

Submit an electronic version of the report and data files from the testing and analysis to the Office of Geotechnical Engineering and the Office of Construction Administration.

524.09

On page 436, **change** the second paragraph of this section to the following;

Tie and support the reinforcing steel so it remains within the required tolerances. Securely tie spacers at quarter points around the cage perimeter and space at intervals not to exceed 5 feet (1.5 m) along the length of the cage. If the size of the longitudinal reinforcing steel equals or exceeds 1-inch (25 mm) in diameter, the Contractor may increase the distance between the spacing devices to a maximum of 10 feet (3 m). Use spacers of adequate dimensions to ensure a minimum annular space

between outside of cage and side of hole or casing of 3 inches (75 mm) for shaft diameters up to 4 feet (1.2 m) and 6 inches (150 mm) for shaft diameters larger than 4 feet (1.2 m). The Contractor may use round plastic spacers.

526.04

On page 440, **change** the paragraph to:

Immediately before placing concrete according to Item 511.07, thoroughly moisten the subgrade or subbase with water in the amount and manner directed by the Engineer. When the bridge superstructure and the approach slab require QC/QA, make at least one set of test cylinders for each 50 cubic yards (35 cubic meters) of concrete. Include the results of the cylinders into the LOT for the 511 superstructure item.

526.08

On page 440, **change** the 1st paragraph to:

The Department will calculate the final adjusted payment per 511 and Supplement 1127. The Department will pay for accepted quantities at the contract price as follows which includes all concrete, curbs, reinforcing steel, dowels, joints, and other materials:

526.08

On page 440, **Add** the new item as follows:

Item	**Unit**	**Description**
526	Square Yard (Square Meter)	Reinforced Concrete Approach Slabs with QC/QA

602.03

On page 447, **Replace** the first sentence of 602.03 C.:

Cast-in-place structures are headwalls, wingwalls, pipe cradles, collars, and other units.

608.01

On page 460, **Replace** the entire section 608.01 Description with the following:

608.01 Description. This work consists of constructing walks, curb ramps, and steps as per plans, specifications and standard drawings.

608.02

On page 460, **Replace** the entire section **608.02 Materials** with the following:

608.02 Materials. Furnish materials conforming to:

Aggregate Base .....304.01 and 304.02
Asphalt concrete Type 1 448
Concrete,
  Class QC Misc or QC 1* 499
  Reinforcing steel 509.02
Crushed aggregate meeting
  grading requirements of 703.10
Detectable Warning Devices..... 712.14
Expansion joint material 705.03

* Replacing Coarse aggregate in the concrete mixes with Recycled Concrete Aggregate conforming to Supplement 1117 is an option

608.03

On page 461, **Replace** 608.03 Item D. Slope, with the following:

D. Slope. Construct the surface of the walk with a maximum transverse slope rate of 0.02 and with the low side adjacent to the roadway.

608.07

On page 462, **Replace** the entire section **608.07 Curb Ramps** with the following:

608.07 Curb Ramps. Excavate, form, place, finish, and cure according to 608.03.A, 608.03.B, 608.03.C, and 608.03.E. Finish ramps to a rougher final surface texture than the adjacent walk and with striations transverse to the ramp slope using a coarse broom or other method approved by the Engineer.

Provide detectable warning devices conforming to 712.14 in curb ramps. Install the detectable warning devices according to manufacturer's written recommendations and standard drawings. Provide a warranty to conform with the requirements of 712.14. Provide the manufacturer's written installation instructions and the 5-year warranty to the Engineer at or before the pre-construction meeting.

611.02

On page 474, **Replace** the entire section 611.02 H. with:

H. For bedding and backfill, furnish materials conforming to:

Natural Soils ....703.16.A[1]
Granular Embankment Materials.....703.16.B[1]
Granular Embankment Material Types A, B, C and D….....703.16.C[1]
Coarse aggregate.....Table 703.01-1
Fine aggregate.....703.02.A, 703.03, or 703.05.A
Structural backfill (Type 2).....703.11.B
304.....703.17.A
410, 411, and 617.....703.18.A
Low Strength Mortar Backfill (LSM).....613

[1] Use any type of material defined as suitable materials for embankment construction except for steel slag and PCS.

611.04.A

On page 476, **Replace** the entire section **611.04.A Shop Drawings** with the following:

A. Shop Drawings. Prepare shop drawings and calculations for C&MS items 706.051, 706.052, 706.053, 706.13 and "Special Design" 706.02 as required below. Have an Ohio Registered Engineer prepare, sign, seal and date all drawings and calculations. Have another Ohio Registered Engineer check all drawings and calculations, then sign, and seal and date all drawings and calculations. Submit load rating report in accordance to the most current version of ODOT's Bridge Design

Manual along with one copy of the shop drawings and one copy of the calculations to the Office of Structural Engineering for all structures with a 10 foot or larger span. Submit an additional copy of the shop drawings and calculations to the Engineer.

1. If Reinforced Concrete Circular Pipe, 706.02, requires a "Special Design" with a specified D-load requirement other than Tables 706.02-1 through 706.02-4, submit shop drawings and design calculations. Design the pipe to meet the D-load requirements to ensure the performance of this specification. Include the following information in the submittal: all structural design and loading information, all material specifications, all dimensions, and the installation plan.

2. Submittals for Precast reinforced concrete 3-sided flat topped culverts, precast reinforced concrete arch sections, or precast reinforced concrete round sections, (706.051, 706.052, or 706.053) shall include structural analysis methods, structural design criteria and calculations, structure details, and shop drawings. Include details for a precast slab bottom if required.

3. To substitute a precast reinforced concrete 3-sided flat topped culvert (706.051), a reinforced concrete arch section (706.052), or a precast reinforced concrete round section (706.053) for one another, the submittal shall include hydraulic calculations. The proposed culvert shall meet or exceed the same hydraulic requirements as the specified culvert and minimum cover requirements. If the specified culvert is on pedestal walls, include the shop drawings for the pedestal wall design in the submittal because 3-sided flat topped culverts, arch culverts, and round sections require different pedestal wall designs.

4. To substitute either a precast reinforced concrete 3-sided flat topped culvert, a precast reinforced concrete arch section, or a precast reinforced concrete round section (706.051, 706.052, or 706.053) placed on a precast or cast-in-place slab bottom for a precast reinforced concrete box culvert (706.05), the submittal shall include hydraulic calculations. The proposed culvert shall meet or exceed the same hydraulic requirements as the specified box culvert and minimum cover requirements. The Department may allow the bottom slab to be cast-in-place but will not issue a time extension for any delays resulting from the use of a cast-in-place bottom slab.

Department approval of shop drawings and calculations is not required.

611.04.B

On page 477 through 479, **Replace** the entire section **611.04 B. Installation Plan** with the following:

Submit a written installation plan to the Engineer for installing all conduit and drainage structures for review and acceptance.

Submit the installation plan at least 15 days before any conduit or drainage structure work begins. Do not perform work without an accepted installation plan.

Include the following required information for each conduit type and size:

1. Trench and excavation cross-sections with dimensions.
2. Locations where the conduit is installed in a cut situation and where it is installed in a fill situation.
3. Type of bedding and backfill material used and maximum lift thickness.
4. Compaction density requirements for bedding and backfill and compaction equipment.
5. Identify the starting location (outlet or inlet) for each run of conduit. All conduit must be laid from the outlet to the inlet unless approved by the Engineer. Bell or groove-end Type A conduit must have a bell or groove-end at the inlet.
6. Maximum allowable joint gap between conduit sections.

7. Other installation details as necessary.
8. Provide written confirmation from the conduit manufacturer that the pipe material and strength supplied are appropriate for the material and density requirements described in the installation plan for the backfill and bedding as well as the height of cover. Ensure the pipe material meets the durability design specified in the plans. This confirmation by the conduit manufacturer will not relieve the Contractor of the responsibility for obtaining the required results.

Include the following required information for each type of drainage structure:

1. Trench and excavation cross-sections with dimensions.
2. Locations where the drainage structure is installed in a cut situation and where it is installed in a fill situation.
3. Type of bedding and backfill material used and maximum lift thickness.
4. Compaction density requirements for bedding and backfill and compaction equipment.
5. Location.
6. Other installation details as necessary.

Deviations from the installation plan during construction require a revision of the installation plan. Resubmit all revisions to the installation plan to the Engineer within 14 days of the change with the conduit manufacturer's written confirmation that the pipe material and strength supplied are appropriate for the material and density requirements described in the newly revised installation plan for the backfill and bedding. If the conduit manufacturer does not provide this written confirmation to the newly revised installation plan, all the conduit installed according to the unconfirmed plan must be replaced. No new installation plans will be considered until all previous installation plans have been confirmed and accepted.

Provide the conduit manufacturer's structural calculations when specified or within 10 days when requested by the Engineer.

For structural plate and metal pipe arch conduit with a span of 57 inches (1440 mm) or larger, ensure the manufacturer provides match-marked ends on the conduit. Include a layout drawing in the installation plan.

For metal conduit with two structural plate thicknesses specified, identify the location of the thicker plates. For precast concrete 3-sided flat and arch topped structures (706.051 and 706.052) provide a 3 inch (75 mm) deep keyway centered on the leg and at least 6 inches (150 mm) wider than the thickness of the leg at the bottom. For precast concrete round sections (706.053) provide an 8-inch (200 mm) deep keyway for spans up to 24 feet (7.3 m) and a 10-inch (254 mm) deep keyway for spans greater than 24 feet, (7.3 m). Center the keyway on the precast arch base. The width of the keyway must be 8 inches (200 mm) greater than the thickness of the precast arch base. For non-vertical leg arches set on pedestal walls, a one sided keyway is acceptable if the required pedestal wall design thickness is not sufficient for a full keyway.

611.04.C

On page 478, **Replace** the first sentence.

Perform work so that it can be verified by the Contractor's representative doing the inspection.

611.04.D

On page 479, **Replace** the first sentence.
Provide a performance report for each performance inspection.

611.04.D

On page 479, **Delete** "D. Conduit diameter report from the Manufacturer"

On page 479, **Add** "J. Conduit Evaluation"

On page 480, **Replace** the first sentence of the first paragraph with the following:

Submit a performance report to the Engineer within 14 days of completing the performance inspection of the conduit run or drainage structure.

611.05

On page 480, **Delete** the entire third paragraph.
"Provide a firm bed for the full width and length of the trench. If bedding material is not provided, loosen the middle third of the bed to seat the conduit. Provide a firm bed beneath the drainage structure."

611.07

On page 480, **Replace** the second sentence of the first paragraph.
Any planned temporary diversion of flows and drainage is the responsibility of the Contractor. Maintain flows and drainage or provide temporary diversion at no additional cost to the Department.

On page 480, **Delete** "in the presence of the Engineer" from the first sentence of the second paragraph.

611.08

On page 482, **Delete** "in the presence of the Engineer" from the third sentence of the first paragraph of **611.08 Joining Conduit**.

On page 483, **Replace** the entire first sentence of **611.08.B.3**

For precast reinforced concrete box culverts, precast reinforced concrete 3-sided flat topped culverts, precast reinforced concrete arch sections, and precast reinforced concrete round sections (706.05, 706.051, 706.052, and 706.053), place the sections according to the installation plan.

On page 483, **Replace** the entire first sentence of **611.08.B.3.c**

For precast reinforced concrete arch sections and precast reinforced concrete round sections (706.052 and 706.053), install a 7/8 x 1 3/8-inch (24 x 34 mm) preformed flexible joint sealant (706.14) along the outside joint chamfer.

On page 483 & 484, **Replace** the entire first sentence of **611.08.B.3.d**

For precast reinforced concrete box culverts, precast reinforced concrete 3-sided flat topped culverts, precast reinforced concrete arch sections, and precast reinforced concrete round sections (706.05,

706.051, 706.052, and 706.053), apply an approved epoxy-urethane sealer per the plans to all top surfaces not covered by membrane waterproofing.

611.10

On page 485, **Delete** "in the presence of the Engineer" from the first sentence of the second paragraph.

611.11

On page 486, in the last paragraph, first sentence, **Replace** "4 x 4-W1.4 x W1.4" with "2 x 2-W0.9 x W0.9"

On page 486, in the last paragraph, after the second sentence, **Add** the sentence:
Provide support beneath the mesh where necessary using galvanized support chairs or #4 reinforcing steel, meeting the material requirements of 509.02

On page 487, in the second paragraph, **Delete** the second sentence "Provide galvanized reinforcing steel support chairs beneath the mesh where necessary."

611.12

On page 487, **Replace** the entire sixth paragraph.
In each phase of construction of a conduit, perform the inspection no sooner than 30 days and no later than 90 days after the completion of the finished grade when not below pavement and after the completion of the rough subgrade when any portion of the conduit is below pavement. The Engineer may permit inspection beyond the 90 day limit. If any corrections are made to the installed pipe after the completion of the finished grade or rough subgrade and prior to the performance inspection, wait 30 days after the correction was made to do the performance inspection. If the contract duration will not permit a 30 day waiting period then the Engineer may adjust the waiting period.

~~**611.13**~~

~~On page 489, **Replace** the entire first sentence of the first paragraph.~~

~~Have an independent Registered Engineer evaluate the Performance Inspection results and any defects as required by AASHTO *LRFD Bridge Construction Specifications*, Section 26 for metal conduit, Section 27 for concrete conduit, and Section 30 for plastic conduit, with modifications according to this specification.~~

611.17

On page 493, in the first paragraph, **Replace** the last sentence with:
When a pay item calls for conduit to be field paved, all work and materials necessary for the item are included in the contract unit price for each conduit.

611.17

On page 493, **Add** the following paragraph after the second paragraph.

All conduits and drainage structures installed without required submittals per 611.04 are considered unacceptable materials per 106.07.

On page 493, **Replace** the third paragraph.
The Department will pay for accepted quantities at the contract prices as follows:

On page 493, **Delete** the following pay structure from the third paragraph.
"After installation of conduit or drainage structure 60%
After performance inspection is completed 10%"
After acceptance of the conduit or drainage structure 30%"

614.03

On page 499, **Add** the following paragraph after the fourth paragraph

Furnish object markers that are a minimum size of 6 x 12 inches and that consists of reflective sheeting adhered to an aluminum or plastic plate.

614.08

On page 502, **Replace** the last sentence in the second paragraph with the following:

The Contractor may, instead of using flaggers, or supplemental to them, furnish, install, maintain and operate a traffic signal or signals, for the purpose of regulating traffic according to a written agreement approved by the Engineer.

614.08

On page 502, **Add** the following paragraph after the second paragraph:

The Contractor may (supplemental to using flaggers) furnish, install, maintain and operate automated flagger assistance devices (AFADs) with incidental items, for the purpose of assisting the flagger(s) in regulating traffic according to a written agreement approved by the Engineer. AFADs shall be furnished per the Department's Approved List and shall be used in accordance with Supplemental Specification 830.

614.11.B

On Page 504, **Revise** Tables 614.11-1M,
Revise from "Gallon per Mile of Line" to "Liter per Kilometer of Line".

614.11.B

On Page 504, **Revise** Tables 614.11-2M,
Revise from "Gallon per Mile of Line" to "Liter per Kilometer of Line".

614.11.F.3

On Page 506, Section 3, **Replace** the subparagraph list with the following:

a. Edge Lines. Class III edge lines shall be 4 inches (100 mm) in width.
b. Lane Lines. Class III lane lines shall be 4 inches (100 mm) in width.
c. Channelizing Lines. Class III channelizing lines shall be 8 inches (200 mm) in width

614.11.G

On page 506, **Add** the following sentence before the first sentence:
Conflicting markings are considered to be any markings not actively in use, not behind channelizing devices or portable barrier and/or could be misinterpreted by the traveling public or cause confusion to the driver as determined by the engineer.

614.13

On Page 512, **Add** the following sentence after the second paragraph:
This material is intended to be used to maintain pavement free from defects as described in 614.02B.

615.05

On page 516, **Replace** the 5th paragraph of 615.05 with the following:
Where Class A or Class B pavement is shown on the plans, provide either rigid pavement or flexible pavement conforming to the following minimum requirements:

MINIMUM COURSE THICKNESS REQUIRED

Pavement Type	Course Make-Up	Class A	Class B
Rigid	452	9 in (230 mm)	7 in (180 mm)
Flexible	448 Type 1[1]	1-1/4 in (32 mm)	1-1/4 in (32 mm)
	448 Type 2[2][5]	1-3/4 in (45 mm)	1-1/2 in (38 mm)
	302[3][5]	5-1/2 in (140 mm)	3-1/2 in (90 mm)
	304[4][5]	6 in (150 mm)	6 in (150 mm)

[1] Meet surface course requirements. The Contractor may use Type 2 surface.
[2] Meet intermediate course requirements.
[3] The Contractor may use 301 or 448 Type 2 intermediate course.
[4] The Contractor may use 2-1/2 inches (65 mm) 301, 302, or 448 Type 2 intermediate course in lieu of 6 inches (150 mm) of 304.
[5] The Engineer may waive maximum placement lift thicknesses if quality control testing conforming to Supplement 1055 is performed and a final density between 93 and 96.5 percent is achieved.

625.22

On page 548, **Replace** the first sentence in the third paragraph with the following:
Foundations for light poles or light towers include excavation, dewatering, sleeving, casing, reinforcing steel, raceways, concrete, backfilling, and when required the 8 foot or 10 foot foundation section of concrete barrier, and the disposal of surplus excavation.

630.07.B

On page 560**, Replace** the section with the following:
Use self-aligning aluminum mounting clips, stainless steel T-bolts, stainless steel washers, and stainless steel nylon insert lock nuts, to attach extrusheet signs to sign attachment assemblies, beam or U-channel post supports, and for U-channel post sections used to attach exit number and supplemental panels to extrusheet signs. Use aluminum bolts, washers, lock washers, and nuts to assemble extrusheet signs shipped in two pieces. Tighten nuts and lock nuts using hand tools only. Do not use pneumatic, hydraulic, battery, electric or other power-assisted tools.

630.14

On page 561, **Replace** the first paragraph with the following
Method of Measurement. The Department will measure Ground Mounted Post Support by the number of feet (meters) measured from the bottom of the support to the top of the support, and will

include driving, hardware for anchor base installation, and furnishing and placing of patching materials for excavations in paved areas. The Department will not measure the overlap length of post for the anchor base installation.

630.14

On page 561, **Replace** the first sentence in the second paragraph with the following

The Department will measure Foundations for ground mounted pipe supports, ground mounted structural beam supports, rigid overhead sign supports and span wire sign supports by the number of each for one pipe, structural beam, pole, end frame or strain pole, and will include excavation, dewatering, sleeving, casing, reinforcing steel, concrete, backfilling raceways, and when required the 10 foot (3m) foundation section of concrete barrier, and the disposal of surplus excavation.

630.14

On page 562, **Replace** the first paragraph with the following

The Department will measure One Way Support and Street Name Sign Support by the number of feet (meters) measured from the bottom of the support to the top of the support, and will include driving, hardware for anchor base installation, and furnishing and placing of patching materials for excavations in paved areas. The Department will not measure the overlap length of post for the anchor base installation.

632.06

On page 574, **Add** the following sentences at the end of the second paragraph

Before closing serrations, apply a bead of Room-Temperature Vulcanizing (RTV) silicone to all serrated surfaces and then tighten. RTV silicone shall be white to facilitate visual inspection. On heads with dual concentric serrated rings, completely fill the space between the rings with RTV silicone.

632.11

On page 575, **Replace** the last sentence in the second paragraph with the following:

Conform to all applicable state and local nuisance dust regulations, and OAC 3745-17-08 while saw cutting.

632.24

On page 546, **Add** the following paragraph after the 2nd paragraph

Furnish each enclosure with at least one padlock. Use padlocks with a bronze or brass lock body and a corrosion protected steel shackle. Obtain the appropriate master key number from the maintaining agency.

632.29

On page 549, **Replace** the 6th paragraph with the following:

The Department will measure Power Service by the number of complete units, and will include weatherhead, conduit, fittings, clamps and other necessary hardware, installation of meter base, ground wire connection, and disconnect switch with enclosure and padlock.

632.30

On page 583, **Replace** the first and second Item with the following:

632 Each Vehicular Signal Head, (Yellow or Black), (Aluminum or Polycarbonate), ___-Section ___ inch (___ mm) Lens ___-Way (with Backplate)

632 Each Vehicular Signal Head, Optically Programmed, (Yellow or Black), (Aluminum or Polycarbonate), ___-Section, ___ inch (___ mm) Lens, ___-Way (with Backplate)

632 .30

On page 564, **Replace** this individual item description with the following:

632 Each Pedestrian Signal Head, (Aluminum or Polycarbonate) (Countdown), Type ___

644.04

On page 617, **Replace** the second sentence in the first paragraph with the following:

However, if applying thermoplastic to pavements that are older than six months, ensure that both the pavement surface and the ambient air temperature at the time of application are not less than 70 °F (21 °C) and rising.

648.05

On page 630, **Replace** the second sentence in the first paragraph with the following:

However, if applying spray thermoplastic to pavements that are older than six months, ensure that both the pavement surface and the ambient air temperature at the time of application are not less than 70 °F (21 °C) and rising.

659.01

On page 638, **Replace** paragraphs one through four with the following:

659.01 Description. This work consists of placing topsoil, preparing the seed bed, and placing and incorporating seed, agricultural lime, commercial fertilizer, and placing mulching material used to achieve NPDES final stabilization.

Perform this work in areas shown on the plans for seeding and mulching.

Perform seeding and mulching after completing all work in the area and within 7 days of obtaining final grade. If it is anticipated that future work may disturb an area, place temporary NPDES compliant Best Management Practices as needed until final stabilization measures under this item can be installed. If the Contractor disturbs a final area, then the Contractor shall restore this area. With the Engineer's approval, the Contractor may apply permanent seed between October 30 and March 1 on projects started and completed within the same calendar year.

702.01

On page 696, **Replace** the entire section **702.01 Asphalt Binders** with the following:

702.01 Asphalt Binders.

General. According to AASHTO M 320-10 Table 1 except as follows.

Ensure PG 70-22M, PG 76-22M, PG 88-22M, and PG 64-28 meet the requirements of Table 702.01-1.

An independent laboratory will not be owned or operated, in whole or part, by the binder supplier, Contractor, or affiliates of either.

Materials and Manufacture. Replace the requirements of AASHTO M 320-10 Table 1 Section 5 "Materials and Manufacture" Section with the following:

5.1 Supply PG Binder from the refining of crude petroleum, or combination of asphalt binders from the refining of crude petroleum, or asphalt binders and suitable liquid from the refining of crude petroleum, and possible organic modifiers for performance enhancement. Material from the crude refining stream is considered neat. Liquid from crude refining may be used for adjustments, but do not used liquid from crude refining for the purpose of substitution of crude refined asphalt binder in a PG Binder. In the event of a failure investigation where asphalt binders exhibit unusual properties a supplier may be requested by the Laboratory to supply information about the makeup of a PG Binder. Failure to cooperate will mean removal from Supplement 1032 certification.

5.2 A modifier may be any approved material of suitable manufacture that is proven compatible with asphalt binder (does not separate appreciably in routine storage), and that is dissolved or reacted in asphalt binder to improve its performance. Performance enhancement is defined as a decrease in the temperature susceptibility of the asphalt binder while maintaining or improving desirable properties in a neat asphalt binder such as coat ability, adhesiveness and cohesiveness. Unless otherwise noted limit modifiers to no more than 6.0 percent by PG Binder weight.

5.3 The use of previously used materials in a PG Binder must be approved by the Department. Since no standard test procedures exist for reprocessed materials (and original tests were not developed with the use of such materials in mind), appropriate test methods may be chosen by the Department for review. Department approval does not relieve the binder supplier from full responsibility for content and use of any previously used material in a PG Binder nor guarantee suitable performance enhancement as defined above. The detected presence in a PG Binder sample of any unapproved previously used material will mean immediate removal from Supplement 1032 certification. Limit approved reprocessed materials to 6.0 percent by PG Binder weight.

5.4 Ensure the PG Binder is homogeneous, free from water and deleterious materials, and does not foam when heated to 350 ºF (175 ºC). Prove the asphalt binder (before modification or after modification if liquid modifier used) is fully compatible with a negative result by means of the Spot Test per AASHTO T 102 using standard naphtha solvent. If standard naphtha shows a positive result, a retest using reagent grade 35 percent Xylene/ 65 percent Heptane (volume) may be used.

5.5 Ensure the PG Binder is at least 99.0 percent soluble as determined by AASHTO T44. Ensure any insoluble component is free of fibers or discrete particles more than 75 µm.

5.6 Ensure flash point is 500 ºF (260 ºC) minimum. Ensure mass change on RTFO of the final PG Binder grade is 0.5 percent maximum.

5.7 Ensure that PG 64-22 has a Penetration (AASHTO T49) of no more than 75.

5.8 Direct Tension testing is not required, unless otherwise required in this specification.

Requirements for PG Modified Binder. Furnish PG Modified Binder according to the requirements of Table 702.01-1 by modifying a non-oxidized, non-air blown, neat asphalt binder by using a styrene butadiene latex rubber compound (SBR polymer), a styrene butadiene styrene polymer block copolymer (SB, SBS polymer),an ethylene/ nbutyl acrylate/ glycidyl methacrylate copolymer (Elvaloy) as specified or Ground Tire Rubber (GTR) according to Supplemental Specification 887. For SB, SBS products the polymer supplier will certify to the refiner and Contractor that the polymer used meets a minimum 68 percent by weight butadiene content. Perform SB, SBS, Elvaloy or GTR modification prior to shipment to the asphalt concrete mixing plant (pre-blend). Perform SBR modification at the asphalt concrete mixing plant (post-blend) or prior to shipment to the asphalt concrete mixing plant (pre-blend) where allowed by specification.

Polyphosphoric acid (PPA) is allowed in PG binders as follows. PPA is a polymer of orthophosphoric acid. When using PPA ensure all the applicable requirements of the required PG

binder in Table 702.01-1 are met. Ensure PPA does not contain water. To retain Supplement 1032 certification suppliers of PPA modified asphalt will provide a written certification to OMM that the amount of PPA used is less than 1.0% by weight of neat binder. Suppliers of PPA can have their Supplement 1032 certification removed for not following the above PPA requirements.

For each project, the PG Modified Binder supplier will give the Contractor a handling guide specifying temperature, circulation, shelf life, and other requirements for assuring the PG Modified Binder will perform as desired. Give this handling guide to the Monitoring Team and place a copy in the plant control room and plant laboratory.

If PG Modified Binder is retained at the asphalt concrete mixing plant for more than two weeks before use or beyond the supplier recommended shelf life, whichever is less, a top and bottom sample test (material property difference between samples taken from the top and bottom of the storage tank) will be performed by the Laboratory on samples retrieved by the Contractor at the District's direction. Do not use material on hand until approved.

Table 702.01-1
Material Requirements for PG Modified Binder

Test / Requirement	**SBR Polymer**		**Pre Blended Binder**				**Note**
Final PG Binder Grade	70-22M (a, b)	64-28 (b)	64-28 (a)	70-22M (a,k)	76-22M (a,k)	88-22M (a,l)	c
Actual Pass Temperatures	Report						i
RTFO Mass Change, percent max	0.5						d
Phase Angle, max	78		80		76		d
Elastic Recovery, min			65		75	90	e, d
Toughness, in. lb	125	105					f, d
Tenacity, in lb.	70	80					f, d
Elongation, in. min	20	20					f, d
Ductility, in. min	28	28					j, d
Separation, F max	10						g, d
Homogeneity			None Visible				h, d

a. Pre-blended Binder. Use a base neat asphalt binder that is a -22 grade for 70-22M and 76-22M. Use a base neat asphalt binder that is a -28 grade for 64-28. 64-28 can be neat, PPA modified or modified with SB, SBS or Elvaloy. Ensure SB, SBS or Elvaloy modified 64-28 meets all requirements listed. Rotational viscosity for 88-22 not required.

b. Post-blended Binder made from neat Supplement 1032 certified or preapproved standard PG Binder grade and SBR solids amount equal to or above 3.5 percent by weight of total binder to achieve the PG Binder grade. Ensure all listed properties are met.

c. Without Direct Tension, graded with actual pass temperatures

d. PG Modified Binder

e. AASHTO T301, 10cm @ 77 ºF (25 ºC), hold 5 min. before cutting, on RTFO material for SB, SBS, Elvaloy

f. ASTM D 5801, 50cm/min @ 77 ºF (25 ºC)

g. Softening point difference of top and bottom of tube sample conditioned at 340 ºF (171 ºC) for 48 hours. Compatibility of polymer and neat binder is sole responsibility of supplier. Formulate PG Modified Binder to retain dispersion for 3 days minimum.

h. Heat a minimum 400 gram sample at 350 ºF (177 ºC) for 2.5-3 hours. Pour entire sample over a hot No 50 (300 µm) sieve at 340ºF (171 ºC). Look for retained polymer lumps.

i. Actual high and low temperature achieved by PG Modified Binder beyond required grade, but will not grade out to the next standard PG Binder grade for low temperature.

j. AASHTO T51, @ 39 ºF (4 ºC), 1 cm/min

k. SB, SBS,Elvaloy or Supplemental Specification 887 GTR

l. SB, SBS, Elvaloy

702.04

On page 700, **Replace** the entire section 702.04 with the following:

702.04 Emulsified Asphalts. Provide emulsified asphalts according to AASHTO M 140 or AASHTO M 208 and specification limits will be producible for at least 30 days from project delivery. Use Saybolt Furol for viscosity.

702.16

On page 703, **Replace** the entire section 702.16 with the following:

702.16 Polymer Emulsified Binder. Material will meet specification requirements of the table below.

Table 702.16 Polymer Emulsified Binder		
Emulsion (AASHTO T 59)	**Type A (b)**	**Type B (c,g)**
Saybolt Furol Viscosity (g)	120-550 (50 ºC)	20-100 (25 ºC)
Storage stability, 24 hrs., % difference, max (a)	1	1
Demulsibility, 35 ml of 0.8% Dioctyl Sodium Sulf., min	50	60
Demulsibility, 35 ml of 0.02N, $CaCl_2$, %, min		60
Sieve test, (distilled water), %, max	0.1	0.05
Distillation to 177 ºC, residue % solids (d)	66	63
Oil distillate, %, max	2	2
Distillation Residue		
Penetration, 100g, 5 sec @77 ºF(25ºC) AASHTO T 49	70-125	90-150
Softening point, º C, min AASHTO T 53	60	
Solubility in TCE, %, min ASTM D 2042 or D 5546	97.5	97.5
Elastic Recovery, 50 ºF (10º C), %, min AASHTO T 301, (e),(f)	60	58

Notes:
(a) After standing undisturbed for 24 hours, the surface will show no white, milky colored substance, but will be a smooth homogeneous color throughout.
(b) CRS-2P, test within 20 days of project sampling. Limits for both certified source and project samples.
(c) CRS-1P and HFRS-1P, test within 20 days of project sampling. Limits for both certified source and project samples.
(d) See Supplement 1013.
(e) Straight molds. Hold at test temperature for 90 minutes. Place in ductilometer and elongate 10 cm at 5 cm/min. Hold for 5 minutes and cut. After 1 hour retract the broken ends to touch and note elongation in cm (X). Percent Recovery = ((10-X)/10) x 100.
(f) SBR, SBS, & SB
(g) Minimum of 70 SFS for project acceptance.

705.01

On page 727, **Replace** the entire section 705.01 with the following:

705.01 Glass Fiber Reinforced Polymer (GFRP) Dowel and Deformed Bars. Furnish round and straight fiber reinforced polymer (GFRP) dowel bars. Furnish deformed GRFP bars meeting the material requirements of ACI 440.6. Ensure resin used to manufacture the GFRP bars consists of an epoxy vinyl ester resin. Ensure the glass fiber used is ECR glass which meets ASTM D578. Ensure that the minimum glass fiber content is 70 percent by weight. Furnish dowels and deformed bars of a type meeting the dimensional requirements of the standard construction drawings Provide certified test data according to 101.03 with each shipment.

706.02

On page 742, **Replace** part 6.2.4 with the following:

6.2.4 Ensure that no more than two holes are cast, drilled, or otherwise neatly made in the shell of each piece of pipe for the purpose of handling or laying. Taper the holes unless drilled, and before backfilling, fill the tapered holes with portland cement mortar, precast concrete plugs secured with portland cement mortar, or a device on the Department's approved list specifically designed for filling the hole. Fill drilled holes with portland cement mortar.

706.04

On page 749, **Replace** part 10 with the following:

10 Ensure that no more than two holes are cast, drilled, or otherwise neatly made in the shell of each piece of pipe for the purpose of handling or laying. Taper the holes unless drilled, and before backfilling, fill the tapered holes with portland cement mortar, precast concrete plugs secured with portland cement mortar, or a device on the Department's approved list specifically designed for filling the hole. Fill drilled holes with portland cement mortar.

706.05:

On page 752, **Replace** the first paragraph with the following:

7.1 For the following box sizes, span by rise, refer to ASTM C1577: 8x4, 5, 6, 7; 10x5, 6, 7, 8, 9; and 12x4, 6, 8, 10 feet. For the following box sizes, span by rise, refer to SS940: 14x4, 5, 6, 7, 8, 9, 10; 16x4, 5, 6, 7, 8, 9, 10; 18x4, 5, 6, 7, 8, 9, 10; and 20x4, 5, 6, 7, 8, 9, 10 feet.

706.051

On page 752, **Revise** the 4th paragraph of 706.051 as follows:

Ensure that the manufacturer submits design calculations, a structural load rating and shop drawings according to 611.04. Ensure that the shop drawings include the following:

706.052

On page 757, **Revise** the 4th paragraph of 706.052 as follows:

5. Ensure the manufacturer submits design calculations, a structural load rating and shop drawings according to 611.04. Ensure the shop drawings include the following:

706.053

On page 761, **Revise** the 4th paragraph of 706.053 as follows:

5. Ensure the manufacturer submits design calculations, a structural load rating and shop drawings according to 611.04. Ensure the shop drawings include the following:

706.13

On page 767, **Replace** part 7 with the following:

7.0 Ensure that no more than two holes are cast, drilled, or otherwise neatly made in the shell of each piece of each riser section for the purpose of handling or laying. Taper the holes unless drilled, and before backfilling fill the tapered holes with portland cement mortar, precast concrete plugs secured with portland cement mortar, or a device on the Department's approved list specifically designed for filling the hole. Fill drilled holes with portland cement mortar.

708.01

On page 784, **Revise** the second paragraph to:

5.1 A green colorant approximately No. 34159 of FS 595C.

708.02.B.1.f

On page 785, **Revise** sentence in **f. Color** to:

Greenish gray, approximating **FS-595C-34159,** visual comparison.

708.02.C.1.f

On page 785, **Revise** sentence in **a. Color** to:

White, meeting or exceeding, **FS-595C-37875** according to **ASTM E 1347.**

708.02.D.1.a

On page 786, **Revise** sentence in **a. Finish, Specular gloss, ASTM D 523** to:

Use Fed. Std. 595C-16440 Gray: 70 % minimum after 3000 hours weathering resistance. Color change less than 2.0 ΔE*, (C.I.E 1976 L*a*b*) ASTM D2244.

708.02.D.1.f.(1)

On page 786, **Revise** the table in **f. Colors** to:

(1) Specified.[2]

Brown	FS-595C, 10324
Green	FS-595C, 14277
Blue	FS-595C, 15526
[2] Contractor's choice unless specified on plans	

712.14

On page 815, **Add** the entire section **712.14 Detectable Warning Devices** as follows:

712.14 Detectable Warning Devices Furnish materials conforming to the following requirements:

Products must be compliant with the Americans with Disabilities Act (ADA).

Products will be designed to be physically embedded into concrete and be of a color that visually contrasts with the concrete. Do not use black as a color.

Products may be manufactured from materials of cast iron, stainless steel, polymer concrete, reinforced polymer composite, or granite. Products may be designed as either one time installation products or replaceable products.

Surface applied, stamped concrete, concrete, and brick products will not be permitted.

Detectable Warning Devices will be provided with a minimum 5 year written warranty with at least the following:

1. The installed device will remain ADA compliant for the term of the warranty period.
2. During the warranty period at least 85% of the truncated domes on installed device will remain entirely intact.
3. The installed device will remain securely affixed to and flush with the concrete substrate.
4. Any surface coating applied to the installed product will remain in place and color fast.
5. At no cost to the Department, the manufacturer will replace the product, including all installation costs, if during the 5 year warranty period the product fails to comply with the above warranty requirements. Any new device installed under the warranty will meet the requirements of this specification

As part of the Department Acceptance process for inclusion on the Approved Product's List (APL) submit the proposed warranty to the Department along with material samples, dimensional drawings, and written installation procedures.

Upon acceptance by the Department the materials will be listed on the APL

Furnish materials according to the Department's Approved Product List (APL)

Begin warranty period upon Contract acceptance.

At the preconstruction meeting provide the Engineer with the written warranty signed by the executive officer of the manufacturing company

725.11.C

On page 777, **Delete** the following sentence from the second paragraph:

If the ballast is to be wired line to grounded neutral or phase to grounded neutral, the ballast may be either the isolated primary winding design or the auto transformer design.

730.14

On page 838, **Replace** the entire section with the following

Furnish sand castings according to ASTM B 26/B 26M, 356-T6 or T7. Furnish self-aligning aluminum extrusheet sign mounting clips with manufacturer identification mark conspicuously incorporated in relief on the top surface of the casting, and in accordance with Supplemental Specification 992. Furnish permanent mold castings according to ASTM B 108, 356-T6 or T7.

Furnish certified material according to Supplement 1092 or 1093.

732.01

On page 843, **Add** the following sentence after the sixth sentence in the third paragraph of the section:

Tri-studs shall be secured to the head using stainless steel nylon-insert or distorted thread locknuts.

732.01

On page 843, **Add** the following sentence after the third paragraph of the section:

For polycarbonate signal heads, obtain proper exterior colors by use of colored plastic rather than painting.

732.11

On page 853, **Add** the following sentences at the end of the first paragraph:

A rectangular, rounded-corner aluminum Pole Identification Tag with minimum dimensions of 1 x 3 x 0.040 inches shall be attached to the pole at a height of 6 inches above the base plate. The Pole Identification Tag shall be clearly and deeply stamped with the ODOT Standard Construction Drawing Number, Design Number, and the fabrication date of the pole (e.g., TC-81.21, DES. 12, 05-12) in characters with a minimum height of 3/8 in. Attach to the pole with four stainless steel 3/16 inch rivets.

732.11

On page 853, **Replace** the last sentence in the third paragraph with the following:

Weld according to 513.21

732.12

On page 854, **Add** the following sentences at the end of the first paragraph:

A rectangular, rounded-corner aluminum Pole Identification Tag with minimum dimensions of 1 x 3 x 0.040 inches shall be attached to the pole at a height of 6 inches above the base plate. The Pole Identification Tag shall be clearly and deeply stamped with the ODOT Standard Construction Drawing Number, Design Number, and the fabrication date of the pole (e.g., TC-81.21, DES. 12, 05-12) in characters with a minimum height of 3/8 in. Attach to the pole with four stainless steel 3/16 inch rivets.

733.03

On page 862, **Add** the following paragraph after the fifth paragraph:

Any fasteners (rivets, bolts, etc.) that penetrate the cabinet exterior shall be tack-welded or brazed on the inside surface to prevent punch-thru if the fastener head is ground off from the outside. The preferred method of cabinet construction uses no such fasteners, but internal welds only.

733.03.A.2.i

On page 867, **Replace** the third sentence in the section with the following:

Wire a second non-GFCI convenience outlet, not fed thru the UPS system (if used).

733.03.B.1.i

On page 871, **Replace** the second sentence in the section with the following:

Furnish a pushbutton with a 5-foot (1.5 m) cord, and panel connector, not hard wired, unless a strain-relieving panel feed-thru bushing is provided.

733.03.B.1.k

On page 871, **Replace** the third sentence in the section with the following:

This relay shall maintain output equal to or exceeding the requirements of the cabinet main overcurrent protective device over the NEMA TS-2 Environmental Operating Range of -30 to +165 degrees Fahrenheit.

733.03.C.4.a

On page 874, **Add** the following sentence after the first paragraph:

Flash Transfer Relays shall use AC coils only; the use of a series rectifier in combination with a DC coil is prohibited.

733.03.C.4.b

On page 874, **Replace** the section in its entirety with the following:

Furnish a rack mounted detector test panel with test switches. Test switches shall call vehicle phases 1-8, pedestrian phases 2,4,6,8 and EVPE channels A,B,C,D as defined in the published ODOT Plan Insert Sheet for default 332/336 cabinet input file assignments. Furnish switches with three position “on/off/momentary on” switches.

733.03.E.1

On page 884, **Replace** the section in its entirety with the following:

1. General. Furnish Model 336 cabinets that meet the basic cabinet specifications “Traffic Signal Control Equipment Specifications”, California Department of Transportation, latest edition. Ensure that the manufacturer of these Model 336 cabinets is listed on the ODOT QPL.

733.09.A

On page 891, **Replace** the second paragraph in its entirety with the following:

Ensure the UPS cabinet has a mastic tape, neoprene foam, or silicone weather-resistant seal between the cabinet bottom flange and the concrete foundation. Minimum tape thickness shall be 1/8-inch (3 mm) and the tape shall be continuous with no gaps between tape pieces or between cabinet and foundation. Sealing tape shall completely cover the bottom cabinet flange and shall be rated for a temperature range of at least -30 °F to +140° F.

733.03.D

On page 884 **Add** the following subsection:

D. Type 334.

1. General. Furnish Model 334C cabinets that meet the specifications "Traffic Signal Control Equipment Specifications" and "Transportation Electrical Equipment Specifications", California Department of Transportation. Ensure that the manufacturer of the cabinets is listed on the CalTrans QPL at the time of the project award.

2. Cabinets. Furnish cabinets that are constructed of aluminum and are supplied unpainted. An anodic coating is not required. Supply galvanized anchor bolts with nuts and washers with each cabinet. Furnish 3/4-inch (19 mm) diameter by 16 inches (0.4 m) minimum length anchor bolts with an "L" bend on the unthreaded end.

3. Terminals and Wiring. Ensure that the vehicle detector field wiring inputs connect to side mounted terminal blocks. Install terminal blocks and associated wiring to the input file. Label the field wiring terminals of the side mounted terminal block by a permanent screening process to identify the input panel (I), the input file slot number (1 through 14) and the channel terminal (D, E, J, or K). An example is "I4-E". Ensure that all terminals on these detector blocks are accessible without removing equipment from the EIA mounting rack.

4. Accessories.

a. Fully equip the cabinets with two channel loop detector sensors, transfer relay, power supply, conflict monitor and switchpacks. When ramp meter warning signs with flashers are used, include a NEMA or Caltrans type flasher wired for control from the controller.

b. Furnish a police panel in each cabinet with the Caltrans required switches. No pushbutton with cord is provided.

c. Furnish an aluminum shelf with integral storage compartment in the rack below the controller. Ensure that the storage compartment has telescoping drawer guides for full extension. Ensure that the compartment top has a non-slip plastic laminate attached.

d. Ensure that each cabinet has two fluorescent lights installed at the top of the cabinet, one near each door. Wire the lights to the door switches such that opening either door will turn on both lights.

5. Lightning/Surge Protection. Comply with the requirements of 733.03.C.5.

6. Conflict Monitor. Furnish a Model 208 conflict monitor unit.

Furnish 334 cabinet according to the Department's Qualified Products List (QPL).

740.09

On page 853 **Replace** the entire section with the following:

740.09 Glass Beads.

Furnish certified test data for the arsenic and lead content of all glass bead samples sent to the Department for testing to ensure that all glass beads furnished to the Department contain no more than 200 parts per million of arsenic or lead as determined in accordance with Environmental Protection Agency testing methods 3052, 6010B, or 6010C, according to SEC 1504 STANDARDS. Section 109 of title 23, United States Code, (r) Pavement Markings.

A. Type A. Furnish Type A glass beads for traffic paint conforming to Supplement 1008 and to AASHTO M 247, Type 1 without flotation properties but dual coated (for moisture resistance and adhesion), with the following exception: 4.6 Flotation Test.

Ensure that the glass beads for traffic paint are packaged in bags designated “740.02”. Use materials certified according to Supplement 1089.

B. Type B. Furnish Type B glass beads for polyester marking material conforming to Supplement 1008 and AASHTO M 247, Type 1 with 50 ± 5 percent flotation coating and ensure that a 50 ± 5 percent moisture resistant coating is retained on each sieve, with the following exception: 4.6 Flotation Test. Ensure that the minimum percent floating equals 90 of flotation coated beads or 40.5 percent of total mixture.

Ensure that the glass beads for polyester marking material are packaged in bags designated “POLY”.

Use materials certified according to Supplement 1089.

C. Type C. Furnish Type C glass beads for thermoplastic material conforming to Supplement 1008 and meeting the following specification.

Sieve Size	**Percent Retained**		
No. 16 (1.18 mm)	3 maximum	**Refractive Index**	1.50 to 1.60
No. 20 (850 µm)	5 to 20	**Roundness**	80 minimum
No. 40 (425 µm)	65 to 95	**Coating**	Moisture resistant (for drop-on beads only)
No. 50 (300 µm)	0 to 5		

Ensure the glass bead packaging is clearly marked “THERMO”

Use materials certified according to Supplement 1089.

D. Type D. Furnish Type D glass beads for Epoxy Pavement Marking conforming to Supplement 1008.

Ensure that the glass bead packaging clearly indicates EPOXY - SIZE I or EPOXY SIZE II.

Ensure that the glass beads have the following gradation when tested according to Supplement 1089.

SIZE I		**SIZE II**	
Sieve Size	**Percent Retained**	**Sieve Size**	**Percent Retained**
No. 10 (2.00 mm)	0	No. 20 (850 µm)	0 to 5
No. 12 (1.70 mm)	0 to 5	No. 30 (600 µm)	5 to 20
No. 14 (1.40 mm)	5 to 20	No. 50 (300 µm)	30 to 75
No. 16 (1.18 mm)	40 to 80	No. 80 (180 µm)	9 to 32
No. 18 (1.00 mm)	10 to 40	No. 100 (150 µm)	0 to 5
No. 20 (850 µm)	0 to 5	Pan	0 to 2
Pan	0 to 2		

Reflective Media: Ensure that the glass beads are smooth, clear, free from any air inclusions, and scratches that might affect their functions as a retro-reflective media, and that have the characteristics listed below.

Roundness (Percent by Weight): Ensure that not more than 20 percent of the glass beads are irregular or fused spheroids and that at least 80 percent of the beads are true beads.

Index of Refraction: Ensure that the refractive index of the beads is a minimum of 1.50 as determined by the liquid immersion method at 77 °F (25 °C). Ensure that the silica content of glass beads is not less than 60 percent.

Coating: Furnish Size I glass beads that are coated with a silane-type adherence coating to enhance its embedment in, and adherence to the applied binder film. Ensure that the coated beads emit a yellow-green fluorescence when tested by the Dansyl Chloride test procedure. Furnish Size II glass beads that are treated with a moisture-proof coating. Ensure that both types of glass beads show no tendency to absorb moisture in storage and remain free of clusters and lumps. Ensure that they flow freely from the dispensing equipment at any time when surface and atmosphere conditions are satisfactory for marking operations.

Determine the moisture-resistance of the glass beads on the basis of the following test:

Place 2.2 pounds (1 kg) of beads in a washed cotton bag, having a thread count of 50 per square inch ($8/cm^2$) (warp and woof) and immerse the bag in a container of water for 30 seconds. Remove the bag and force the excess water from the sample by squeezing the bag. Suspend and allow them to drain for two hours at room temperature 70 to 72 °F (21 to 22 °C). After draining, mix the sample in the bag by shaking thoroughly. Transfer a sample slowly to a clean, dry glass funnel having a stem 4 inches (100 mm) in length, with a 3/8-inch (10 mm) inside diameter stem entrance opening, and a minimum exit opening of 1/4 inches (6 mm). Ensure that the entire sample flows freely through the funnel without stoppage. When first introduced to the funnel, if the beads clog, it is permissible to tap the funnel to initiate flow.

Use materials certified according to Supplement 1089.

STATE OF OHIO
DEPARTMENT OF TRANSPORTATION
SUPPLEMENTAL SPECIFICATION 861
GEOGRID FOR SUBGRADE STABILIZATION

July 19, 2013

861.01 Description
861.02 Materials
861.03 Shipment and Storage
861.04 Construction
861.05 Method of Measurement
861.06 Basis of Payment

861.01 Description. This work consists of furnishing and installing biaxial geogrid at the locations and dimensions shown in the Contract Documents, or as directed by the Engineer, for the purpose of stabilizing the subgrade.

861.02 Materials. Geogrid is a geosynthetic material formed by a regular network of integrally connected elements with apertures of sufficient size to allow interlocking with surrounding soil, stone, or other geotechnical material to function primarily as reinforcement.

Furnish geogrid which is dimensionally stable and able to retain its geometry under construction stresses. Furnish geogrid that is resistant to damage during construction, ultraviolet degradation, and all forms of chemical and biological degradation encountered in the soil on which it is placed. Furnish geogrid that conforms to the properties presented in Table 861.02-1. Furnish geogrid according to the Department's Qualified Product List (QPL).

861.03 Shipment and Storage. Follow ASTM D 4873 for geogrid labeling, shipment, and storage. Furnish product labels that clearly show the manufacturer's or supplier's name, product type, lot number, roll number, manufactured date, and roll dimension. Furnish a notation for each shipping document certifying that the material is in accordance with the manufacturer's certificate.

During shipment and storage, protect the geogrid from direct sunlight, ultraviolet rays, temperatures greater than 160 ºF (71 ºC), flames including welding sparks, mud, dirt, dust, and debris. Keep the geogrid dry during storage and do not store directly on the ground.

The geogrid will be rejected if it has defects, tears, punctures, flaws, deterioration, or damage incurred during manufacturing, transportation, or storage. The Engineer may allow the Contractor to repair torn or punctured sections by placing a geogrid patch over the damaged area which extends at least 3.0 feet (0.9 m) beyond the damaged area in all directions.

TABLE 861.02-1 REQUIRED GEOGRID PROPERTIES

Property	Test Method	Required Value[1]	
Reinforcement Properties			
Strength at 2% Strain	ASTM D 6637	400 lb/ft	5.8 kN/m
Minimum Opening Size	Direct Measure	0.75 in [2]	19 mm
Maximum Opening Size	Direct Measure	3.0 in [3]	76 mm
Survivability Index Values			
Ultimate Tensile Strength	ASTM D 6637	1300 lb/ft	19.0 kN/m
Junction Strength	GRI[4] GG2	130 lb	580 N
Ultraviolet Stability	ASTM D 4355	70 % at 500 hrs	

[1] Values, except ultraviolet stability, are minimum average roll values, MARV (average value minus two standard deviations.) Strength in the machine and cross-machine directions must both meet the required value.

[2] Minimum opening size must be $\geq D_{50}$ of aggregate above geogrid to provide interlock.

[3] Maximum opening size must be $\leq 2 \times D_{85}$ to prevent aggregate from penetrating into the subgrade.

[4] GRI – Geosynthetic Research Institute

861.04 Construction

A. Surface Preparation. Excavate the subgrade at the locations and to the dimensions and depths specified in the Contract Documents, according to Item 204. If specified in the Contract Documents, place geotextile fabric on the bottom of the excavation. The Contractor may attach the geogrid to the geotextile fabric if placing both at the bottom of the excavation.

B. Installation. Have a representative from the geogrid manufacturer provide on-site technical assistance at the start of the work and when required by the Engineer or Contractor.

Place the geogrid in accordance with the manufacturer's recommendations and remove excess geogrid. The Contractor may turn the excess portion of the geogrid into the fill as an alternative to removal, if this results in an acceptable installation. Maintain the vertical position of the geogrid at the specified depth.

Roll out the geogrid longitudinally along the roadway, in line with the placement of the granular fill. Do not drag the geogrid across the subgrade. Place the geogrid smooth and free of wrinkles. Fold or cut the geogrid to conform to curves. Hold the geogrid in place with pins, staples, sandbags or piles of granular material.

Overlap geogrid a minimum of 2.0 feet (0.6 m) at the ends and sides. Overlap geogrid 3.0 feet (0.9 m) in all directions if foot traffic causes movement of the subgrade. Place the beginning of each new roll beneath the previous roll to prevent the advancing fill from lifting the geogrid. Stagger end overlaps at least 10 feet (3.0 m) from other end overlaps in adjacent rolls or consecutive layers.

Patch damaged geogrid. Place a geogrid patch that extends at least 3.0 feet (0.9 m) beyond the damaged area in all directions. If the damaged portion is larger than 50 percent of the roll width, cut across the entire width of the roll to remove the damaged portion and overlap the cut ends.

C. Granular Fill Placement. Place granular fill as specified in the Contract Documents and according to Item 204. Cover the geogrid with fill within three calendar days after placement. Place, spread, and compact the granular fill in a manner that prevents the development of

wrinkles or movement of the geogrid. Keep the geogrid taut during the placement of the initial lift of granular fill. Hold the geogrid in place with pins, staples, sandbags, or piles of granular material to prevent movement during granular fill placement.

End dump granular fill on the geogrid. Do not operate construction equipment directly on the geogrid. Place the end dumped material along the roadway centerline and spread outward to the roadway edges. Unless stated otherwise, maintain a minimum lift thickness of 12 inches (300 mm) for the lift immediately above the geogrid. Do not turn equipment or brake suddenly on the first lift of fill over the geogrid. Replace or repair damaged geogrids at no expense to the Department

If rut depths exceed 3 inches (75 mm) reduce the size, weight, or both of the construction equipment. The Engineer may increase the lift thickness to obtain stability at the top of the lift. The Engineer may waive density requirements for the first lift if the subgrade is too soft to support compaction equipment. Fill in any ruts that form during construction. Do not use a dozer blade to cut down the fill between ruts.

861.05 Method of Measurement. The Department will measure the quantity of Geogrid by the number of square yards (square meters) of subgrade covered by the geogrid. The Department will not include overlaps in the measurement for payment.

861.06 Basis of Payment. The Department will pay for excavation, granular material, and geotextile fabric under Item 204. The Department will pay for accepted quantities at the contract price as follows:

Item	Unit	Description
861	Square Yard (Square Meter)	Geogrid For Subgrade Stabilization

Designer Note: Use geogrid in the design according to Geotechnical Bulletin 1 (GB1). Geogrid used for subgrade stabilization is applicable for any of the following:

1. Average N_L of 0 to 5 (CBR < 3)
2. To avoid impact on utilities below the subgrade.
3. To avoid difficult maintenance of traffic situations when using other stabilization methods.

If required granular thickness is 16 inches or greater, put geogrid in the middle of the granular material and include a fabric at the bottom.

Plan Preparation with Proprietary Geogrid as an Alternate

The FHWA is prohibited from using federal funds to pay for patented or proprietary products, unless such products are obtained through competitive bidding with equally suitable unpatented items (23 CFR 635.411). A proprietary geogrid for subgrade stabilization may be used if it is shown as an alternative in the plans that will be bid against a generic geogrid specified in SS 861. Guidance on preparing a set of plans that presents the two alternates for the subgrade stabilization is provided below.

One alternate presents the use of a generic geogrid that conforms to SS 861. The other alternate includes the use of the proprietary geogrid. The contractor bids on both alternates. The sponsoring agency then decides which alternate to include with the awarded contract. If the agency selects the higher cost alternate, then the agency is responsible for funding the difference in cost. More than two alternates may be presented to allow additional types of proprietary geogrids.

Typical Sections – The first step is to determine the depth of the undercut for the generic geogrid using GB1 and the subsurface conditions encountered. Then determine the depth of the undercut for the proprietary geogrid using appropriate engineering design methods. Depending on the depth of the undercut and the type of subgrade soil, the undercut may also require a geotextile fabric at the bottom.

On the typical sections in the plans, show the two subgrade stabilization alternates, as shown in the following example.

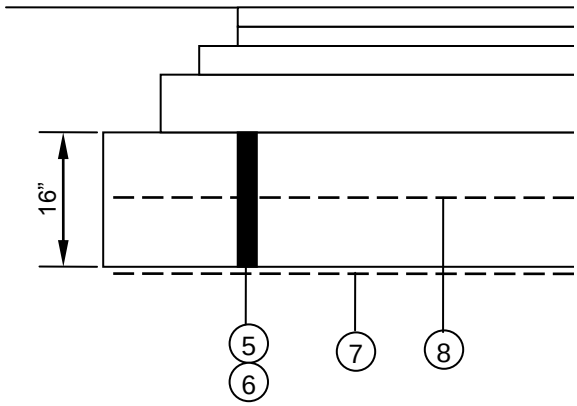

SUBGRADE STABILIZATION
ALTERNATE 1: GENERIC GEOGRID

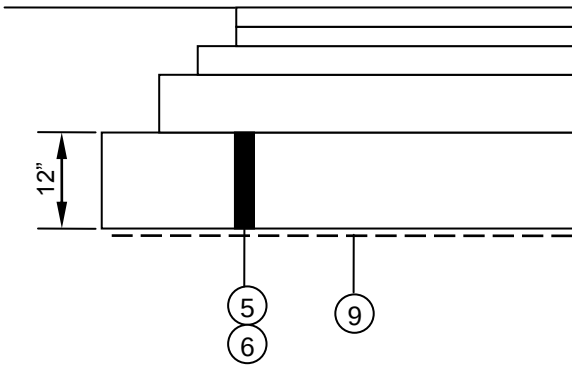

SUBGRADE STABILIZATION
ALTERNATE 2: ‘Product Name” GEOGRID

LEGEND

⑤ ITEM 204 – EXCAVATION OF SUBGRADE
⑥ ITEM 204 – GRANULAR MATERIAL TYPE B
⑦ ITEM 204 – GEOTEXTILE FABRIC
⑧ ITEM 861 – GEOGRID FOR SUBGRADE STABILIZATION
⑨ ITEM 861 – GEOGRID FOR SUBGRADE STABILIZATION, AS PER PLAN, “Product Name”

Plan Notes – In the General Notes, include the standard plan note “Item 204 – Subgrade Compaction and Proof Rolling” which can be found in GB1, “Plan Subgrades”. Also include plan notes, similar to the following, that describe to the contractor how to bid the subgrade stabilization alternates and that specify the “As Per Plan” proprietary geogrid.

ALTERNATE BID ITEMS FOR SUBGRADE STABILIZATION WITH GEOGRID
THERE ARE TWO ALTERNATES FOR PERFORMING SUBGRADE STABILIZATION WITH GEOGRID. BID ALL ALTERNATE BID ITEMS.

ALTERNATE 1: UNDERCUT AND REPLACE WITH GRANULAR MATERIAL TYPE B USING GEOTEXTILE FABRIC AND A GENERIC GEOGRID CONFORMING TO SUPPLEMENTAL SPECIFICATION 861,

ALTERNATE 2: UNDERCUT AND REPLACE WITH GRANULAR MATERIAL TYPE B AND
A PROPRIETARY GEOGRID AS SPECIFIED BELOW.

ITEM 861, GEOGRID FOR SUBGRADE STABILIZATION, AS PER PLAN, ‘Product Name’
FURNISH ‘Product Name’ GEOGRID FROM ‘Manufacturer Name, City, State’. INSTALL ACCORDING TO SUPPLEMENTAL SPECIFICATION 861.

Estimated Quantities – In the general summary, include estimated quantities for both alternates. Group each set of alternate bid items and label them as "Alternate 1: Generic Geogrid" and "Alternate 2:" followed by the name of the proprietary geogrid, as shown in the following example.

Example of General Summary with Alternate using Proprietary Geogrid

ITEM	ITEM EXT.	GRAND TOTAL	UNIT	DESCRIPTION	SEE SHEET NO.
				ALTERNATE 1: GENERIC GEOGRID	
204	13000	3110	CU YD	EXCAVATION OF SUBGRADE	
204	30010	3110	CU YD	GRANULAR MATERIAL, TYPE B	
204	50000	7000	SQ YD	GEOTEXTILE FABRIC	
861	10000	7000	SQ YD	GEOGRID FOR SUBGRADE STABILIZATION	
				ALTERNATE 2: 'Product Name' GEOGRID	
204	13000	2330	CU YD	EXCAVATION OF SUBGRADE	
204	30010	2330	CU YD	GRANULAR MATERIAL, TYPE B	
861	10001	7000	SQ YD	GEOGRID FOR SUBGRADE STABILIZATION, AS PER PLAN, 'Product Name'	#

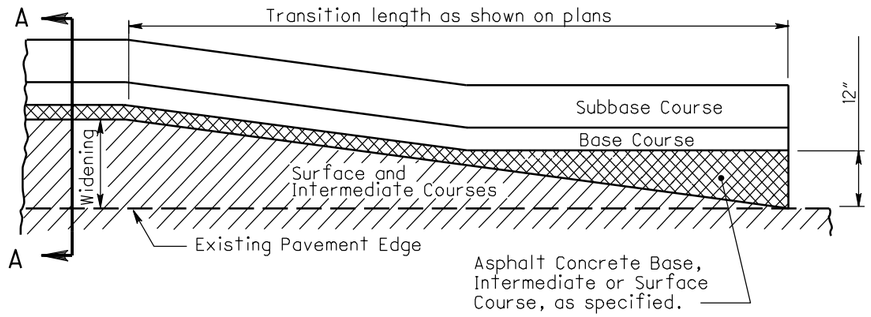

PLAN

MERGING EDGE OF PAVEMENT WIDENING WITH EDGE OF EXISTING PAVEMENT

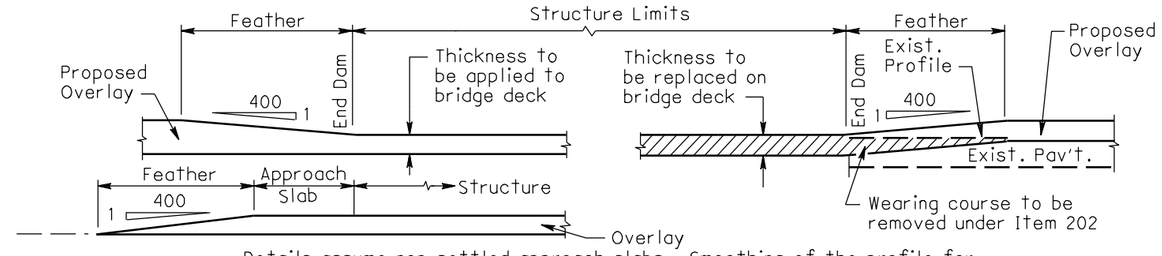

Details assume non-settled approach slabs. Smoothing of the profile for settlement is required per plan grades or as directed by the Engineer.

FEATHERING AT STRUCTURES

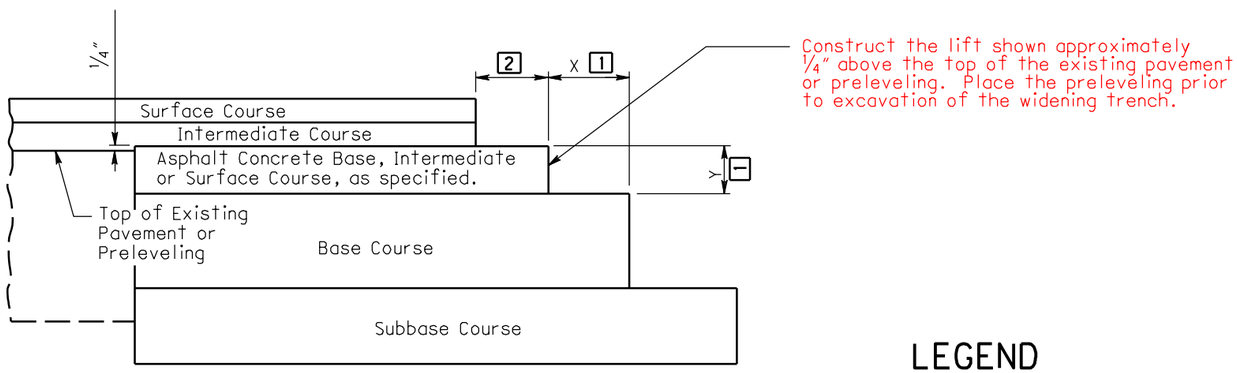

SECTION A-A

COURSE DETAIL FOR WIDENING

LEGEND

1 The extended width (X) of a base or subbase lift shall be equal to the depth (Y) of the overlaying lift or 6", whichever is greater, or as shown on the plans.

2 The extended width shall be equal to the combined thickness of the surface and intermediate courses, or 4 inches, whichever is greater.

3 Permissible removal and replacement.

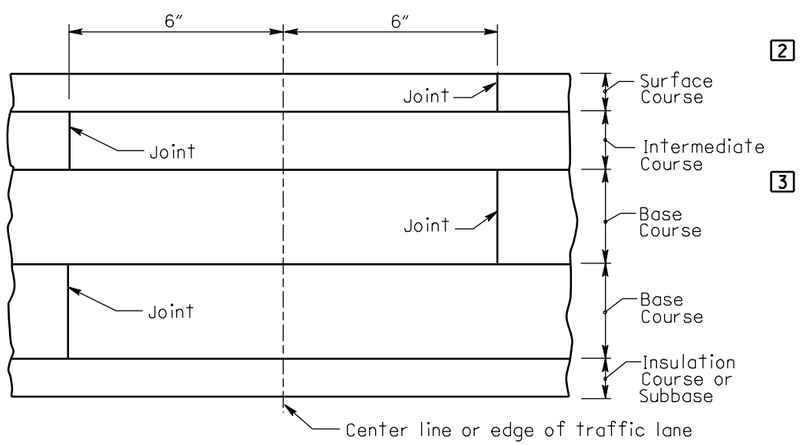

LAPPING LONGITUDINAL JOINTS

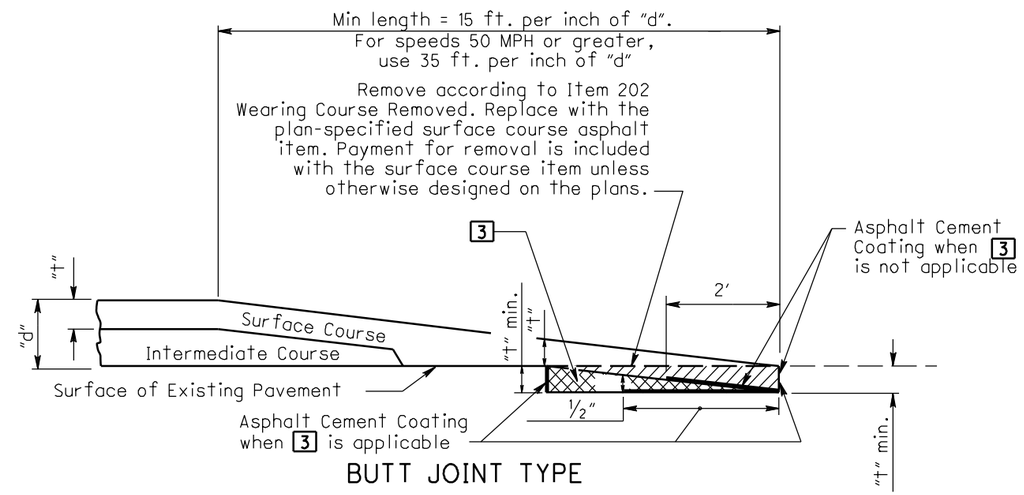

BUTT JOINT TYPE

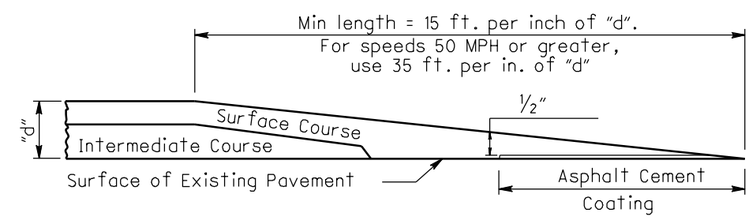

TAPER EDGE TYPE

NOTE: Either butt or taper type may be used unless type is specified by the plan.

PLACING FEATHERED AREAS

Values for "t" and "d" are obtained from the plan.

THIS DRAWING REPLACES BP-3.1 DATED 01-20-12.

STATE OF OHIO DEPARTMENT OF TRANSPORTATION
ADMINISTRATOR
04-20-12
DATE

STDS. ENGINEER
D. Miller

OFFICE OF ROADWAY ENGINEERING

STANDARD ROADWAY CONSTRUCTION DRAWING
ASPHALT PAVING

SCD NUMBER
BP-3.1

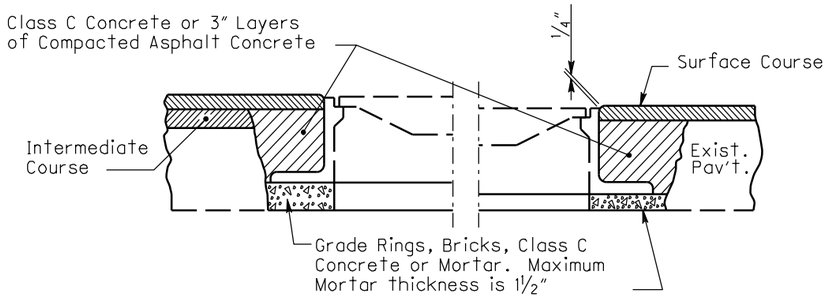

USING CONCRETE OR MORTAR

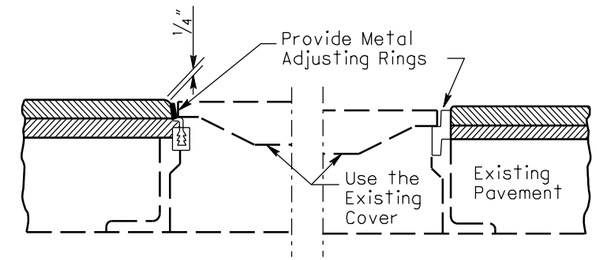

USING METAL ADJUSTING RINGS

Metal adjusting rings shall:
(a) attach securely to the existing frame by welding or mechanical devices;
(b) consist either of cast metal having an integral rim and seat, or be fabricated metal with a sturdy connection between the seat and rim; and
(c) provide an even seat for the manhole cover.
In addition, the adjusting ring type shall be a design acceptable to the local governmental agency responsible for street and sewer maintenance. Any installation unacceptable to the Engineer shall be replaced by the Contractor at his expense.

MANHOLES ADJUSTED TO GRADE

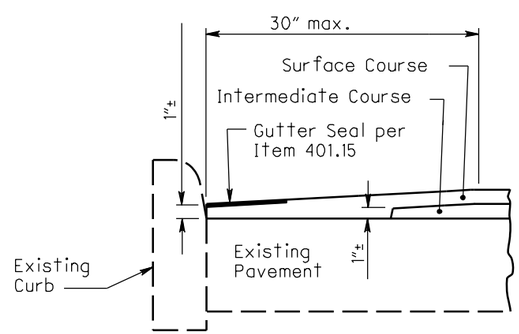

Special care shall be taken during construction to obtain maximum compaction of bituminous concrete in gutters.

GUTTER FINISH

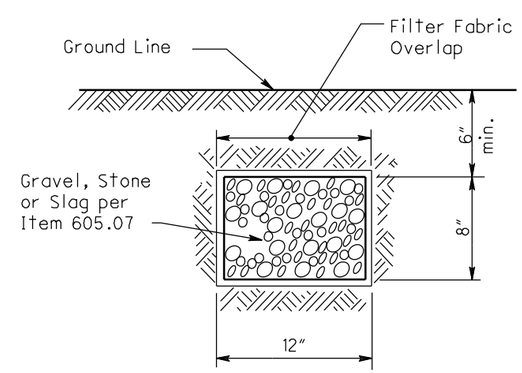

Aggregate drains to be placed where and as directed by Engineer. Provide Filter Fabric when specified as a separate pay item.

AGGREGATE DRAIN

THIS DRAWING REPLACES BP-3.1 DATED 01-20-12.

STATE OF OHIO DEPARTMENT OF TRANSPORTATION
ADMINISTRATOR
04-20-12
DATE

STDS. ENGINEER
D. Miller

OFFICE OF ROADWAY ENGINEERING

STANDARD ROADWAY CONSTRUCTION DRAWING
ASPHALT PAVING

SCD NUMBER
BP-3.1

2/2

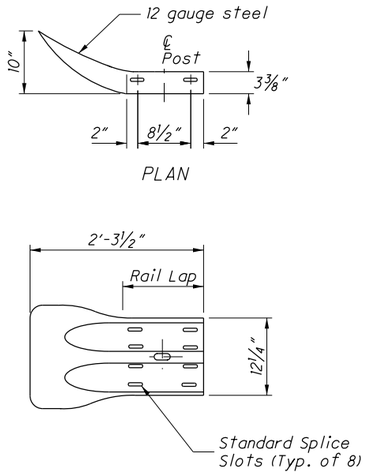

W-BEAM FLARED END SECTION

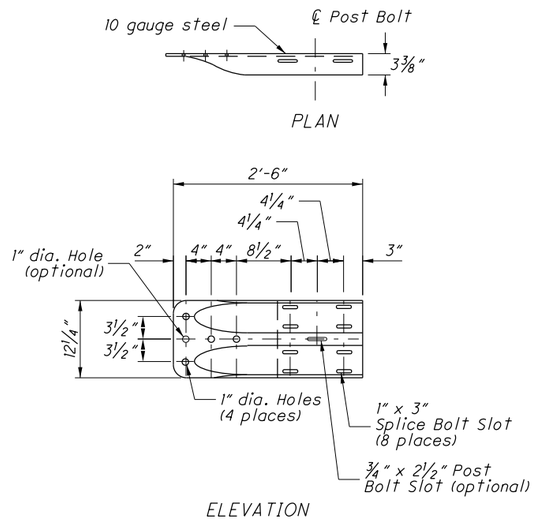

W-BEAM TERMINAL CONNECTOR

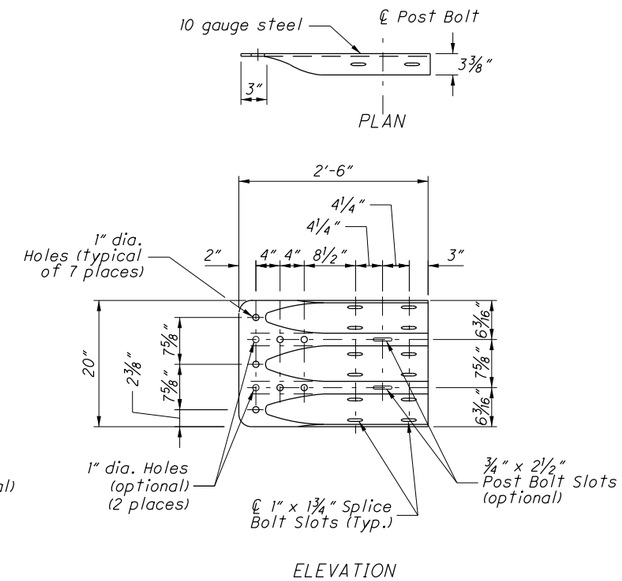

THRIE-BEAM TERMINAL CONNECTOR

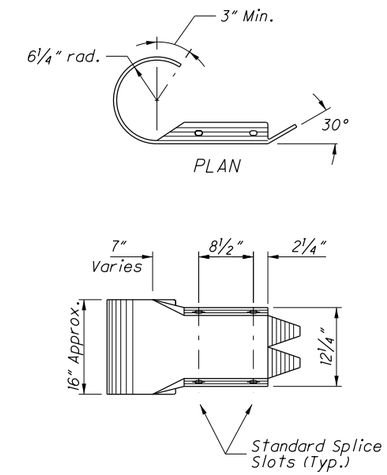

ROUNDED W-BEAM END SECTION

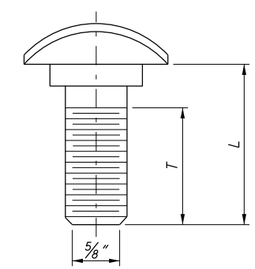

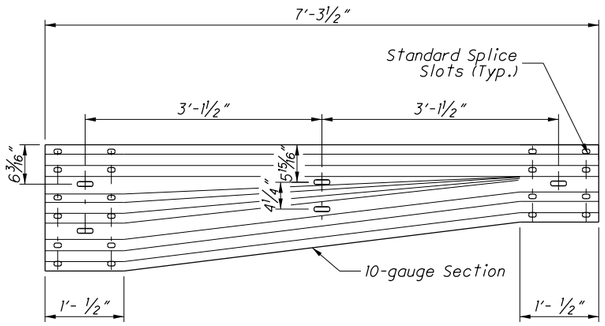

ASYMMETRIC TRANSITION SECTION
(W to Thrie-Beam)

NOTES

GENERAL: Components shown on this drawing are used in a variety of guardrail systems. See individual guardrail drawing for specific applications.

See CMS 606 for guardrail specifications not covered on these drawings.

Refer to AASHTO M 180-12 for dimensional details of W-Beam and Thrie-Beam rail elements, related buffer and end sections, beam splices, post and splice bolts, nuts, and Type 1 W-Beam to Thrie-Beam Transition sections. Beam washers are not to be used. Bolts grade shall be ASTM A307.

RAIL ELEMENTS: Unless otherwise specified, W-Beam Rail is 12 gauge steel with an effective length of 12'-6" or 25'-0", with ²⁹⁄₃₂"x1⅛" splice bolt slots, and ¾" x 2½" post bolt slots on 3'-1½"" centers regardless of post spacing. Field punch or drill bolt holes or slots for irregularly spaced posts as specified in CMS 606.04.

Substituting one 10 guage steel beam element where two nested 12 guage steel beams are specified is permitted (both W-beam and Thrie-beam).

RAIL SPLICES: Lap splices between two rail elements or between a rail and terminal connector in the direction of traffic. Lap the flared end sections in the direction of traffic.

GUARDRAIL BOLT
(For Post and Splice Bolts)

L	T min.	Bolt Use
22" (Standard Rail)	4"	Type MGS: WP/WB, PB
34" (Barrier Rail)		
14"	4"	Type MGS: SP/WB, PB
1¼"	1⅛"	Splice Bolt

WP = Wood Post
SP = Steel Post
WB = Wood Blockout
PB = Plastic Blockout

Longer Bolt may be needed for round Wood Post larger than 8" dia.

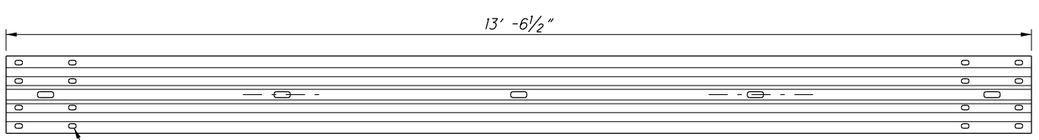

12'-6" W-BEAM SECTION

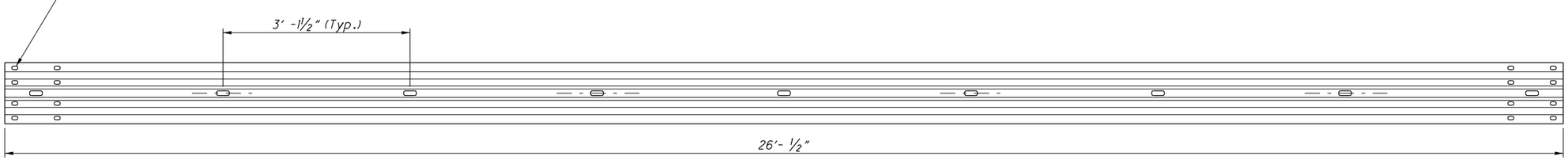

25'-0" W-BEAM SECTION

THIS DRAWING REPLACES MGS-1.1 DATED 1-18-2013

STATE OF OHIO DEPARTMENT OF TRANSPORTATION
Michael Blume
ADMINISTRATOR
7-19-2013
DATE

STDS. ENGINEER M. Ruppe

OFFICE OF ROADWAY ENGINEERING

STANDARD ROADWAY CONSTRUCTION DRAWING
MIDWEST GUARDRAIL SYSTEM
GUARDRAIL DETAILS
(Rail Components)

SCD NUMBER MGS-1.1

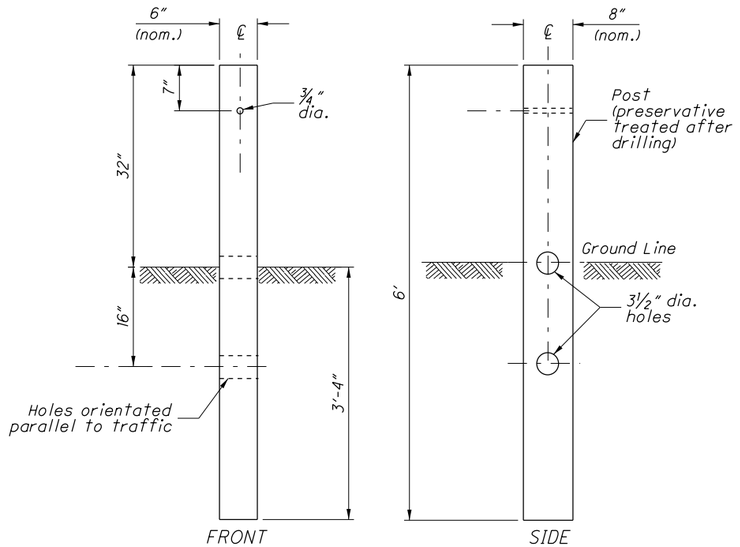

TYPE 1 BREAKAWAY CRT POST

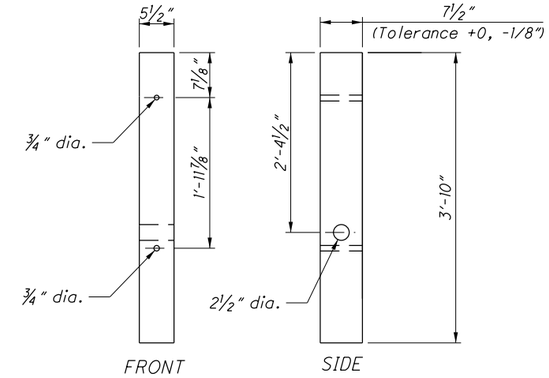

TYPE 2 BREAKAWAY BCT TIMBER POST

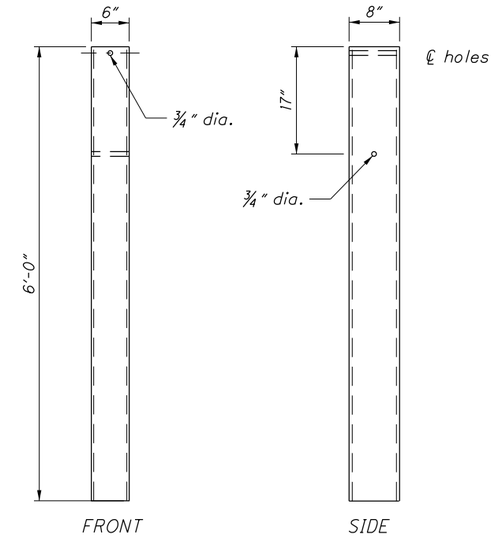

STEEL GROUND FOUNDATION TUBE

STEEL BEAM POSTS				
Size	Beam depth	Flange width	Flange thickness	Web thickness
Rolled W6x8.5	5.8"	3.94"	0.193"	0.170"
Rolled W6x9	5.9"	3.94"	0.215"	0.170"
Welded 6x8.5	6.0"	3.94"	0.193"	0.170"
Welded 6x9	6.0"	3.94"	0.215"	0.170"

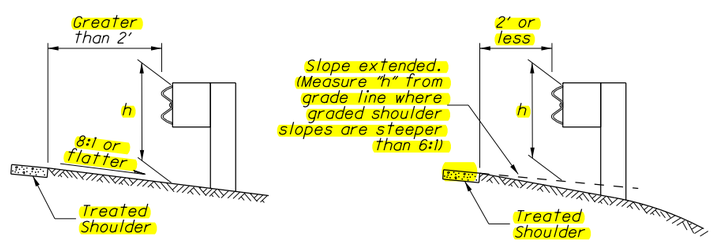

MEASURING GUARDRAIL HEIGHT

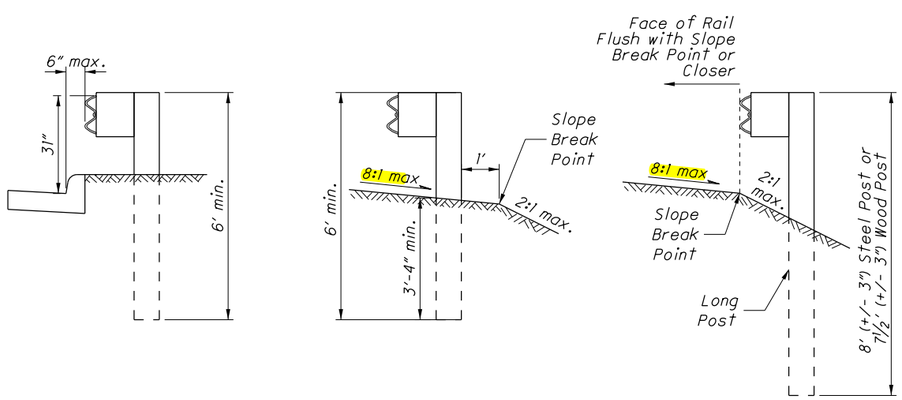

GUARDRAIL POST LENGTH AND POSITION

NOTES

GUARDRAIL HEIGHT: For initial installation, construct the guardrail within ± 1" of the standard 31" height to the top of W-Beam rail.

When subsequent projects, such as resurfacings, affect the height of existing guardrail, adjustment is not required if the finished height is within ±3" of the standard height.

POSTS: The Standard Post Length is 6'-0" (+3",-0" tolerance). Wood Posts are permitted instead of Standard Steel Posts per CMS 710.11.

POST EMBEDMENT DEPTH: Standard embedment depth is 3'-4" minimum. Do not drive posts located over a culvert with less than 4'-3" of cover; instead set in drilled or dug holes. Where site constraints prohibit the post from being placed at least one foot in front of the slope break point, use longer posts as shown in the Guardrail Post Length and Position Detail. The face of the rail may not be beyond the slope break point.

SPECIAL POST MOUNTINGS: Install posts located over a drainage inlet or structure with a cover of less than 3'-4" as shown in the FOOTING ANCHOR Detail.

ANCHORS: Holes shall comply with CMS 510. Use non-shrink, nonmetallic grout per CMS 705.20.

PROTECTIVE COATING: In lieu of the complying with CMS 710.06, coat expansion shields, anchors and concrete insert anchor assemblies embedded in concrete in accordance with ASTM A 153 or be of stainless steel. Any bolts screwed into these devices shall meet CMS 710.06.

PAYMENT: Payment for standard guardrail is measured in feet as **Item 606 - Guardrail, Type MGS**. Runs with longer posts should be paid as **Item 606 - Guardrail, Type MGS With Long Posts**, also measured in feet. All costs associated with special post mountings are included in the unit price bid of Item 606 Guardrail of the type specified in the plans.

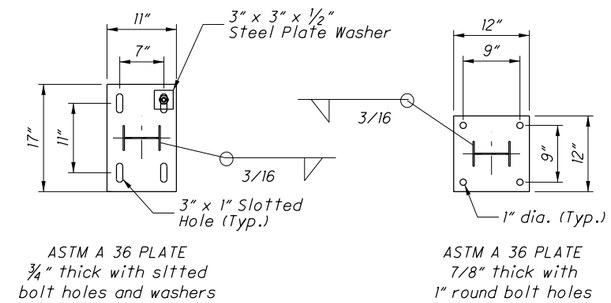

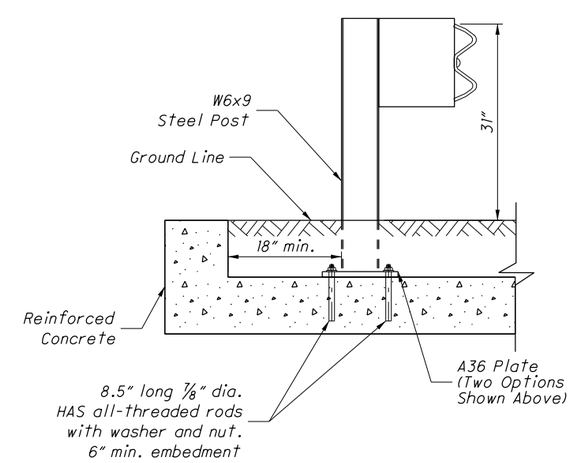

FOOTING ANCHOR DETAIL

THIS DRAWING REPLACES MGS-1.1 DATED 1-18-2013

STATE OF OHIO DEPARTMENT OF TRANSPORTATION
Michael Blue
ADMINISTRATOR
7-19-2013
DATE

STDS. ENGINEER M. Ruppe

OFFICE OF ROADWAY ENGINEERING

STANDARD ROADWAY CONSTRUCTION DRAWING
MIDWEST GUARDRAIL SYSTEM
GUARDRAIL DETAILS (Posts)

SCD NUMBER MGS-1.1

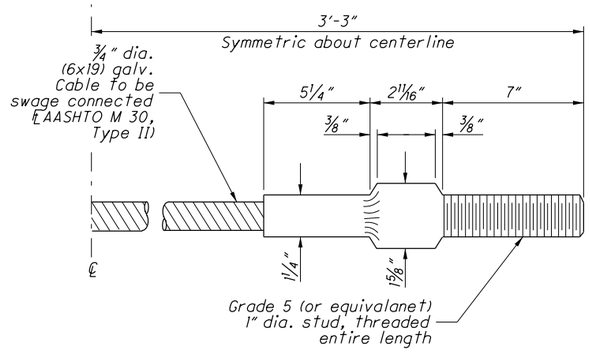

STANDARD SWAGED FITTING AND STUD

CABLE ANCHOR

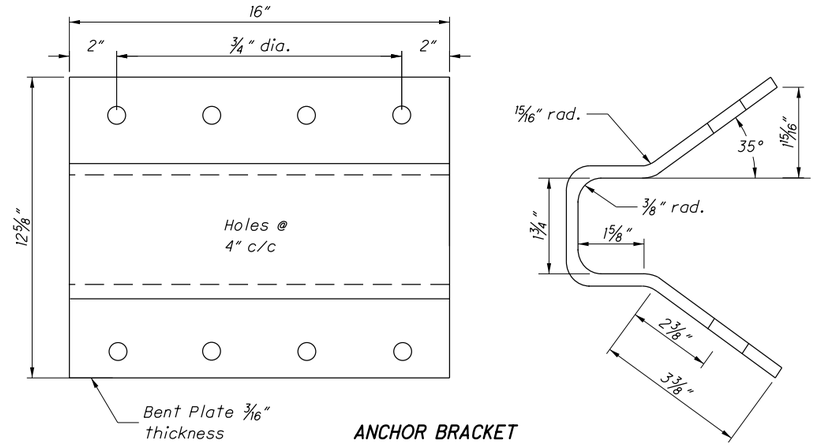

ANCHOR BRACKET

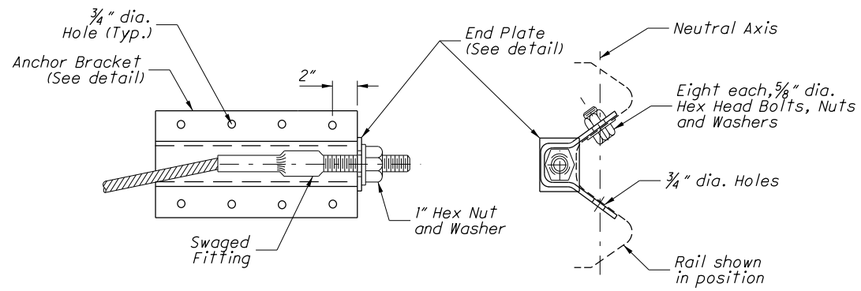

ANCHOR BRACKET ASSEMBLY DETAILS

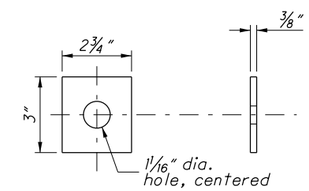

END PLATE

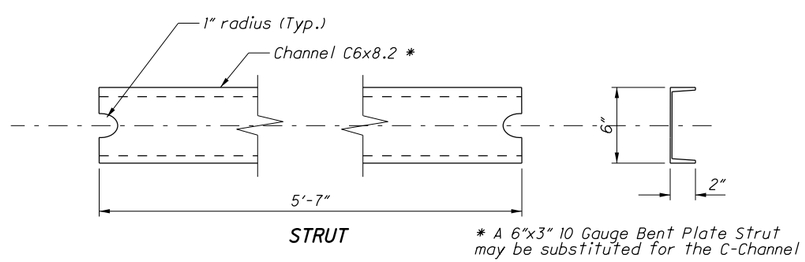

STRUT

* A 6"x3" 10 Gauge Bent Plate Strut may be substituted for the C-Channel

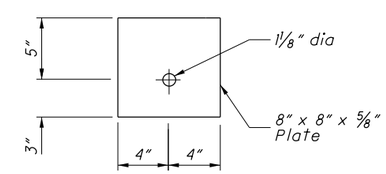

BEARING PLATE

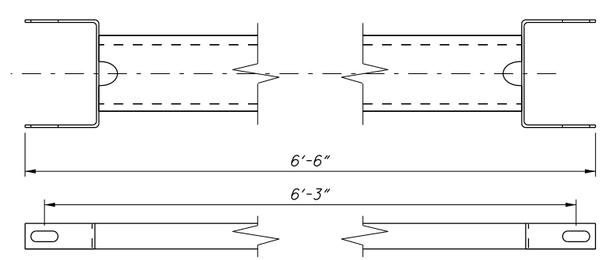

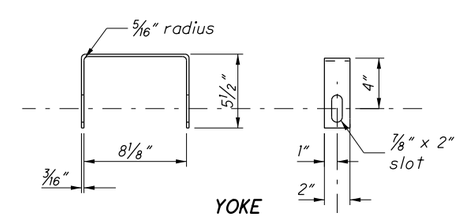

YOKE

Two required in Assembly

Channel legs shown down. For opposite hand, install Channel legs up.

STRUT AND YOKE ASSEMBLY

THIS DRAWING REPLACES MGS-1.1 DATED 1-18-2013

STATE OF OHIO DEPARTMENT OF TRANSPORTATION

Michael Blume — ADMINISTRATOR — 7-19-2013 DATE

STDS. ENGINEER: M. Ruppe

OFFICE OF ROADWAY ENGINEERING

STANDARD ROADWAY CONSTRUCTION DRAWING

MIDWEST GUARDRAIL SYSTEM GUARDRAIL DETAILS (Misc. Components)

SCD NUMBER **MGS-1.1**

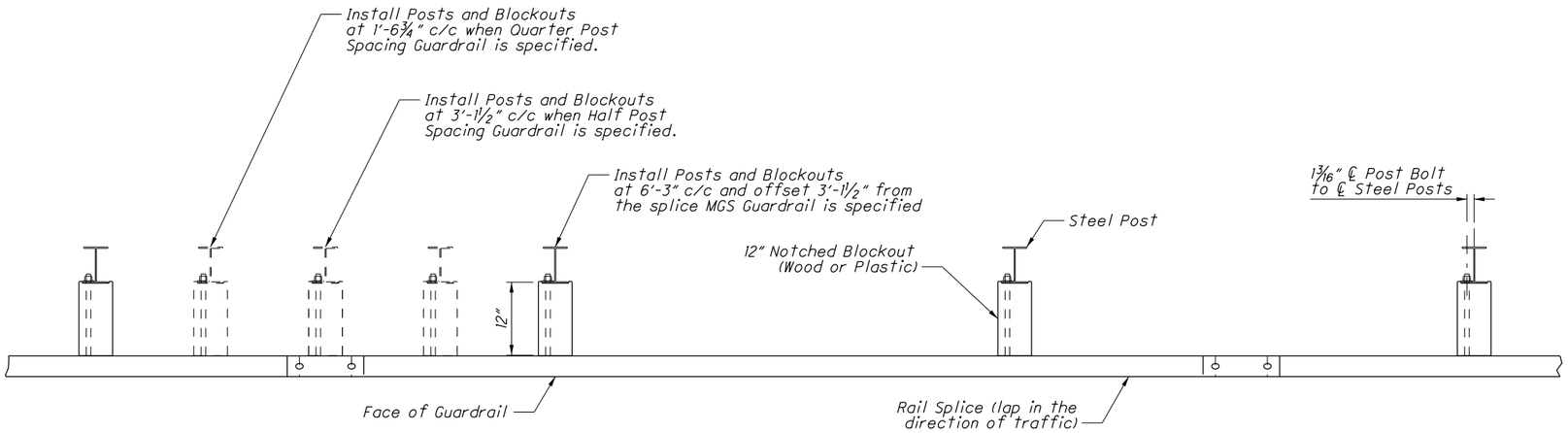

PLAN VIEW

(Steel Posts shown)

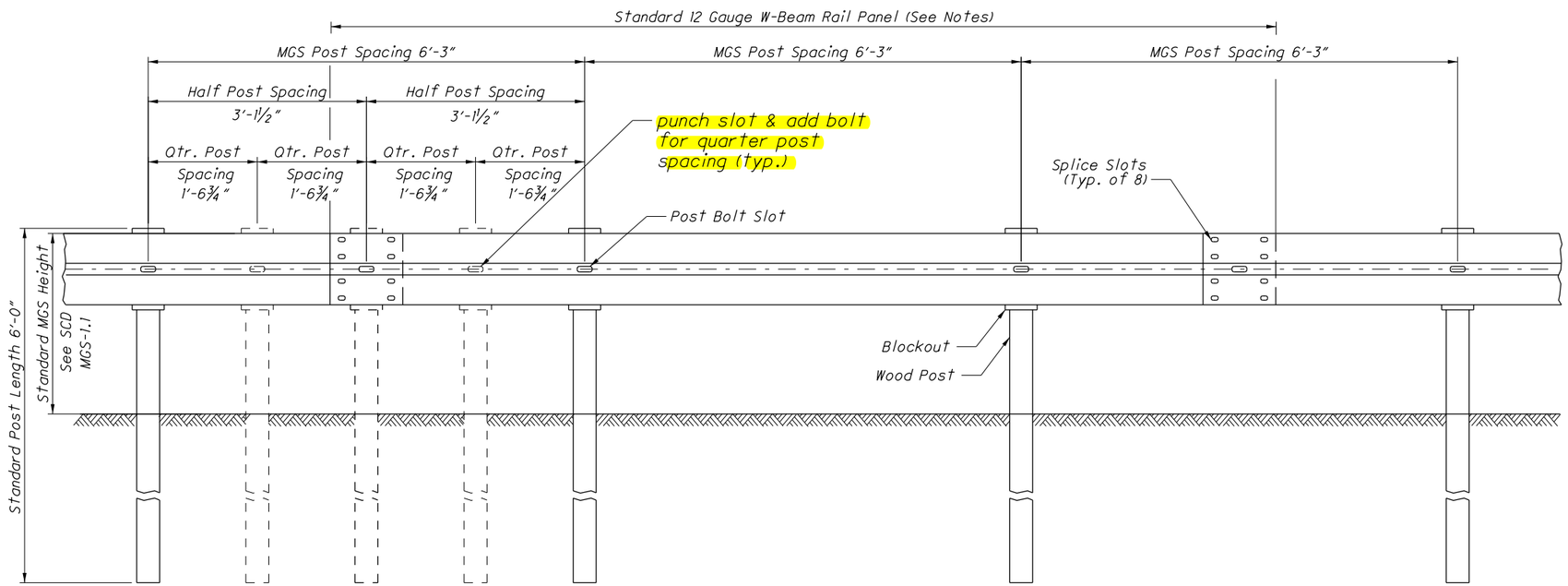

ELEVATION

(Wood Posts shown)

NOTES

RAIL: Use W-Beam rail meeting AASHTO M 180-12 Type II Class A, as specified in CMS 606. Either 13'-6½" long (12'-6" between splices) or 26'-½" long (25'-0" between splices) rail sections may be used.

POSTS: Posts may be constructed of wood or steel. Use the same type of post throughout the length of the project unless otherwise specified in the plans or permitted by the Engineer.

Wood post shall be fabricated and pressure-treated for approved species as per CMS 710.12. Bore bolt holes and, if required, trim the tops of posts after the posts are set.

See SCD MGS-1.1 for Standard Steel Posts.

All posts are 6'-0" long (+3", -0 tolerance) unless specified otherwise in the Contract Document. Posts may be set in drilled holes or may be driven to grade.

BLOCKOUTS: Blockout dimensions are dependent on post used. Wood Blockouts are to be pressure treated as specified in CMS 710.14. Bore bolt holes. Approved Alternate blockouts may be used in lieu of the wood blockouts shown. The approved list is maintained by the Office of Roadway Engineering.

When terminating double-sided barrier guardrail with an impact attenuator, use reduced 8" deep blockouts on the last # posts on the barrier design to accomodate the narrower widths of the attenuators.

WASHERS: Install appropriate sized standard galvanized steel washers on the nut side of bolts installed on wood posts. Beam washers are not to be used.

DELINEATION: For Barrier Reflectors see CMS 626.

MISCELLANEOUS: For other guardrail details, see SCD MGS-1.1.

PAYMENT: Guardrail is paid in feet per
ITEM 606 - Guardrail, Type MGS.
Half or Quarter Post Spacing Guardrail per
ITEM 606 - Guardrail, Type MGS Half Post Spacing
ITEM 606 - Guardrail, Type MGS Quarter Post Spacing

STATE OF OHIO DEPARTMENT OF TRANSPORTATION
Michael Blue — ADMINISTRATOR
7-19-2013 DATE

STDS. ENGINEER M. Ruppe

OFFICE OF ROADWAY ENGINEERING

THIS DRAWING REPLACES MGS-2.1 DATED 1-18-2013

STANDARD ROADWAY CONSTRUCTION DRAWING
MIDWEST GUARDRAIL SYSTEM, STANDARD TYPE MGS
Regular, Half, & Quarter Post Spacing

SCD NUMBER **MGS-2.1**

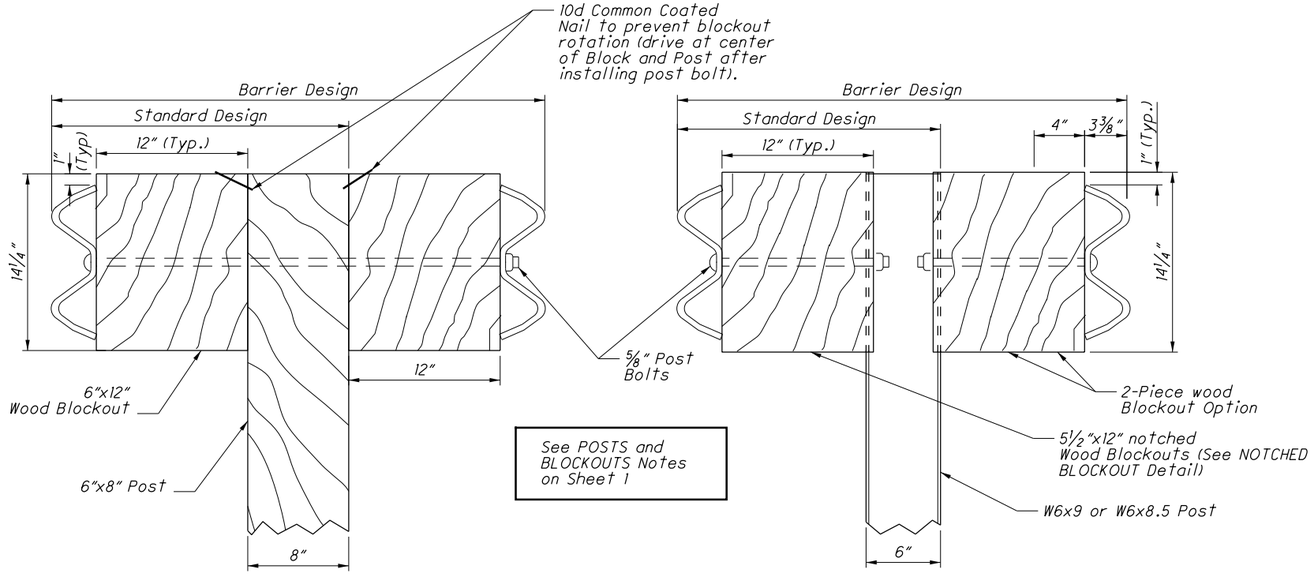

See POSTS and BLOCKOUTS Notes on Sheet 1

SQUARE WOOD POST

STEEL POST

See POSTS Note, Sheet 1

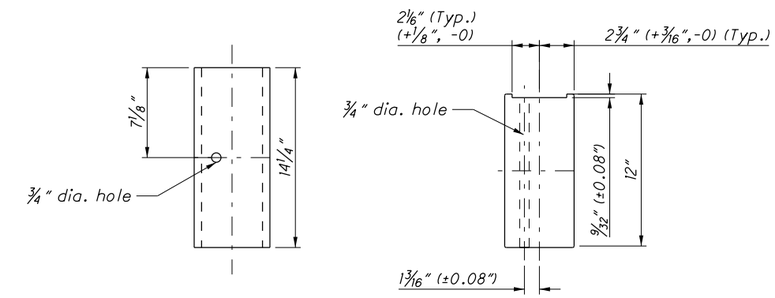

ELEVATION

PLAN

NOTCHED BLOCKOUTS FOR STEEL POSTS

See BLOCKOUTS Note on Sheet 1

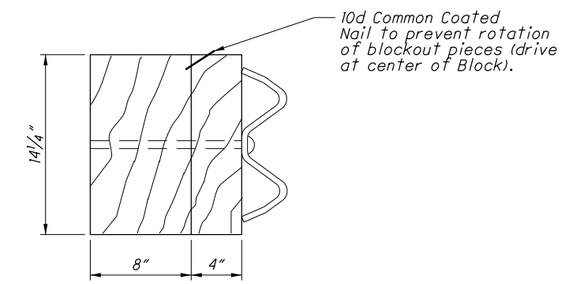

TWO-PIECE WOOD BLOCKOUT OPTION

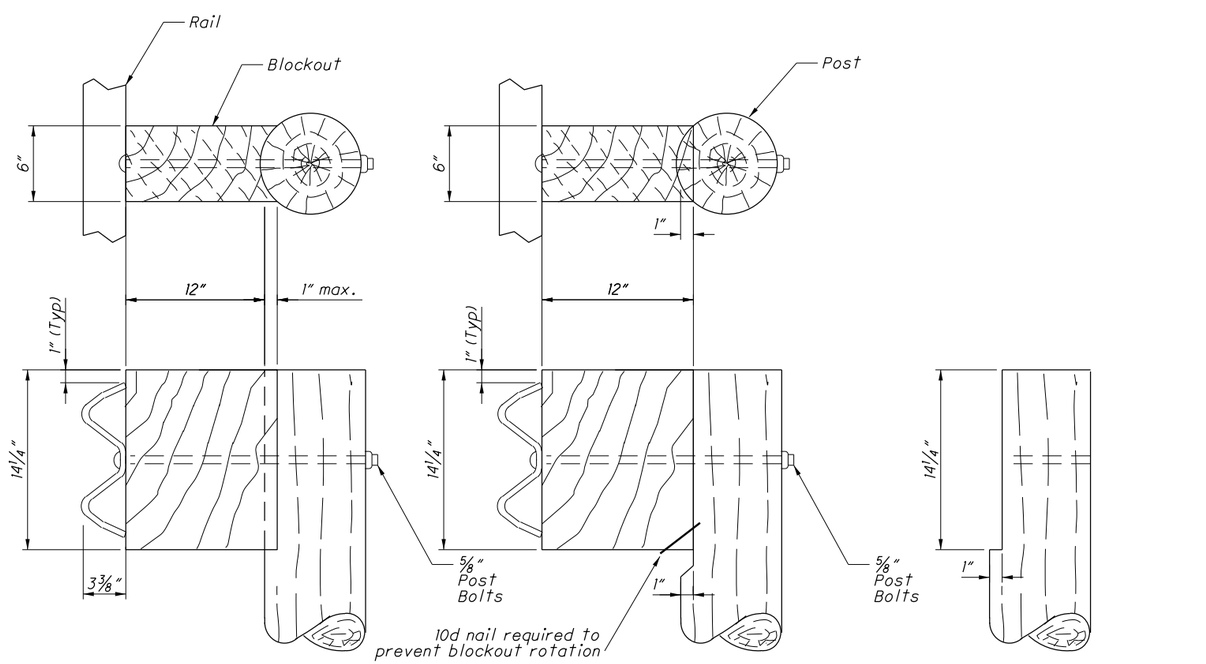

Method 1
Routed Blockout

Method 2
Notched Post

Toe nail not required if post is cut as shown

Alternate methods of placing the Blockouts on round Posts may be submitted for consideration and approved by the Engineer.

ROUND WOOD POSTS

Single Sided runs only (Standard Design)

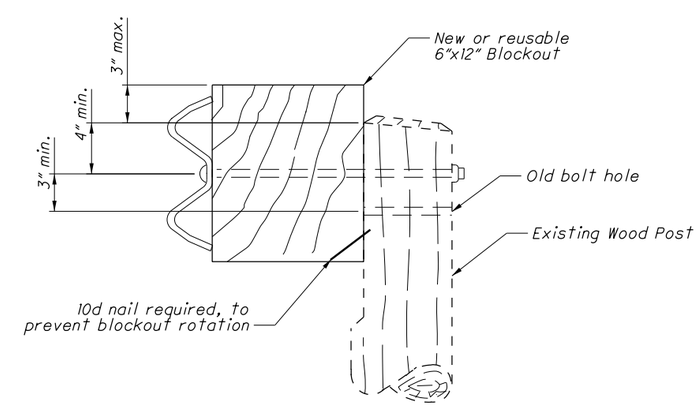

RAISING EXISTING GUARDRAIL HEIGHT

STATE OF OHIO DEPARTMENT OF TRANSPORTATION

Michael Blume
ADMINISTRATOR

7-19-2013
DATE

STDS. ENGINEER M. Ruppe

OFFICE OF ROADWAY ENGINEERING

STANDARD ROADWAY CONSTRUCTION DRAWING

MIDWEST GUARDRAIL SYSTEM, STANDARD TYPE MGS

Standard Design and (Median) Barrier Design

THIS DRAWING REPLACES MGS-2.1 DATED 1-18-2013

SCD NUMBER MGS-2.1

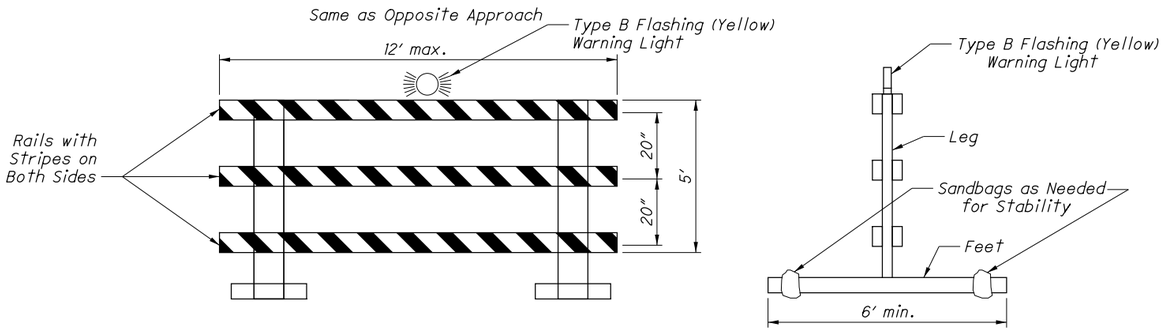

TYPE 3 BARRICADE DETAIL

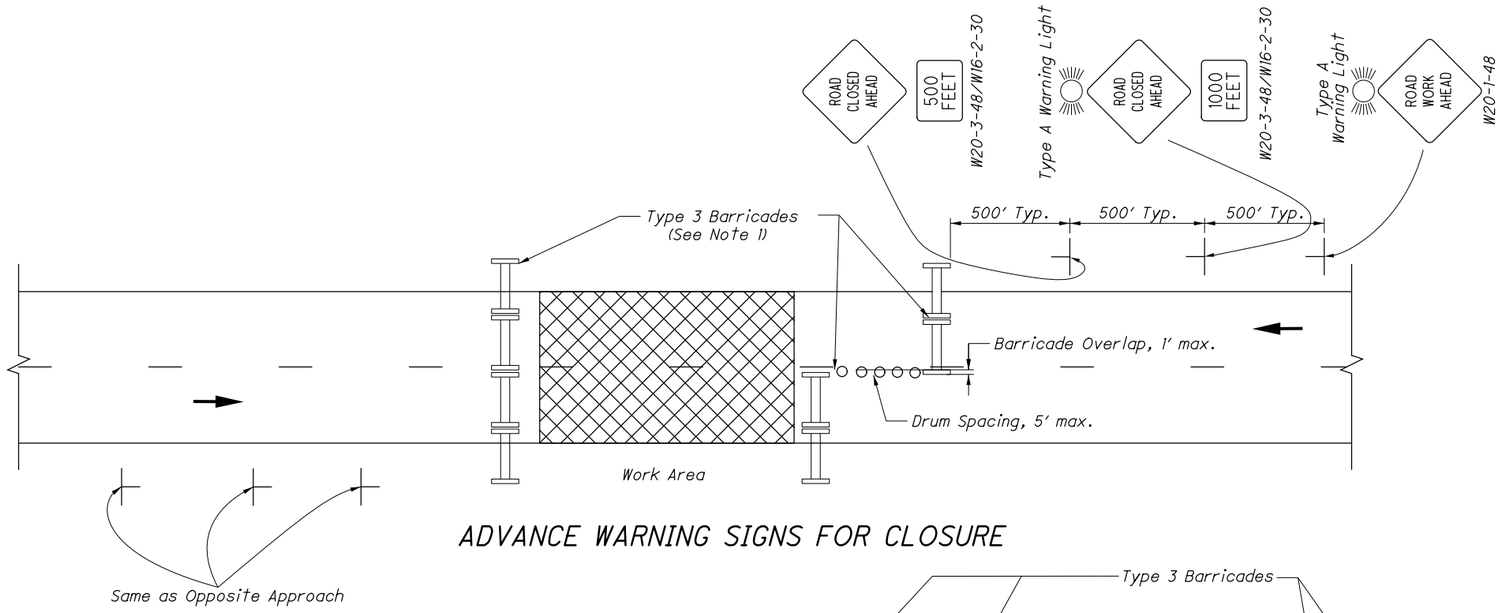

ADVANCE WARNING SIGNS FOR CLOSURE

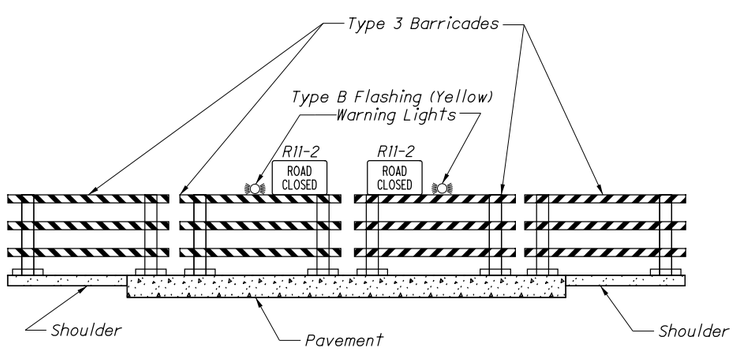

BARRICADE CLOSURE PROFILE

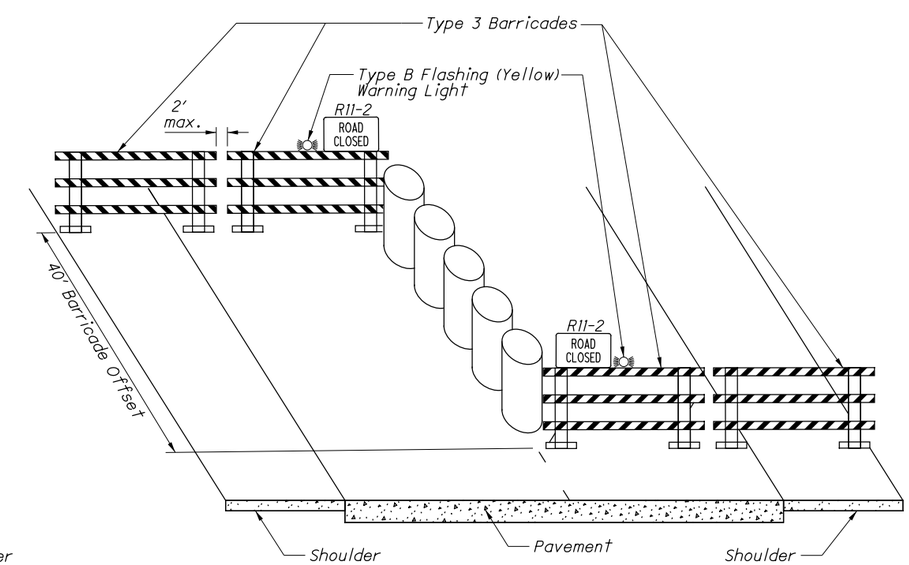

BARRICADE CLOSURE OFFSET OPTION

NOTES:

BARRICADE USE

1A. Barricades shall be NCHRP 350 compliant and shall be erected according to details shown. When the road is closed to traffic, barricades shall be used to effectively close the entire roadway, including the paved or aggregate shoulder.

1B. Barricades along adjacent lanes may be offset from each other as shown, with drums used to close the resulting gap. Maximum drum spacing shall be 5′.

BARRICADE REFLECTORIZATION AND COLOR

2A. In construction or maintenance areas, all rails of the barricades shall be reflectorized with orange and white reflectorized Type G sheeting in 6″ wide alternate stripes which slope downward toward the center line of the road at an angle of 45 degrees. All three rails of the barricade shall be striped on both sides. Legs and feet shall be either all white or may display the natural color of the material used.

2B. Barricades used in permanent or semi-permanent application shall differ only in that they shall use red and white stripes.

SIGNS

3A. Where the road is closed to traffic by the erection of barricades, ROAD CLOSED (R11-2) signs shall be mounted laterally as shown.

3B. The advance warning signs shown on this drawing are intended for use when the traveled way is brought to an end with no direction given to traffic. Where traffic has been directed from the permanent roadway at or just in advance of the barricades, advance signing should be provided as shown in Standard Construction Drawing MT-95.70 or Ohio Manual of Uniform Traffic Control Devices Figure 6H-7 as appropriate.

3C. Advance warning signs approaching a lane closure, as shown on these plans, shall consist of two ROAD CLOSED AHEAD (W20-3) signs with distance plaques placed about 500′ and 1000′ from the closure, and a ROAD WORK AHEAD (W20-1) sign placed about 1500′ from the closure. The signs shall be placed on both sides of the roadway for multi-lane divided highways or when required by the plans.

FLASHING WARNING LIGHTS

4A. Type A flashing warning lights are required on the ROAD WORK AHEAD (W20-1) sign and on the first ROAD CLOSED AHEAD (W20-3) sign.

4B. Type B flashing warning lights shall be provided on Type 3 Barricades, one light per each closed lane. Each light shall be conspicuously visible at all distances up to 1000′ under normal atmospheric conditions. The light shall be in operation at all times during the period the highway is closed.

OPERATION ON 2-LANE, 2-WAY ROADWAYS

5A. Where the barricade runs across the entire roadway without longitudinally offsetting sections, the Contractor will normally open only the left side of the barricade as necessary to allow the construction vehicle to enter, and then shall immediately close it. The entire barricade will not normally be opened at the same time. The Contractor shall assign an employee to assure that the barricade is closed at the end of each workday.

5B. Where the sections of the barricade are offset from each other with drums provided to close the gap (see note 1B), the Contractor may move the drums as necessary to allow the construction vehicle to enter, and then shall immediately replace the drums. The Contractor shall assign an employee to assure that the drums are in place at the end of each workday.

THIS DRAWING REPLACES MT-101.60 DATED 07-20-2012.

STATE OF OHIO DEPARTMENT OF TRANSPORTATION
Michael Blume 7-19-2013
ADMINISTRATOR DATE

STDS. ENGINEER Stargell

OFFICE OF ROADWAY ENGINEERING

STANDARD ROADWAY CONSTRUCTION DRAWING
ROAD CLOSURE USING TYPE 3 BARRICADES

SCD NUMBER MT-101.60

CONDITION I

DROP-OFFS BETWEEN ADJACENT TRAVELED LANE(S) / PAVED SHOULDER
(Freeways, Expressways, other Roadways ≥ 45 mph)

These treatments are to be used for resurfacing or pavement planing, etc. where a drop-off is located between or within traveled lanes and/or shoulder.

D	Treatment
≤ 1-½"	Erect W8-11 or W8-9 sign as appropriate.
1-½" - 3"	1) Optional Wedge Treatment; or, 2) Close a lane and/or shoulder per Condition II.
> 3"	Close a lane and/or shoulder per Condition II.

OPTIONAL WEDGE TREATMENT

(MILLING OR RESURFACING)

1. W8-9/W8-11 sign shall be used as appropriate.
2. This treatment shall not be used where a hot longitudinal joint per CMS 446 is required.

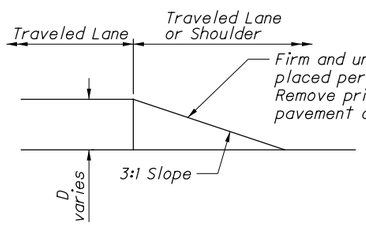

All labor, equipment, materials, and incidentals to provide and subsequently remove the pavement wedge shall be included and paid for under the lump sum bid for CMS 614 - Maintaining Traffic.

CONDITION II

DROP-OFFS BEYOND EDGE OF TRAVELED LANES / PAVED SHOULDER
(Freeways, Expressways, other Roadways ≥ 45 mph and minimal driveways)

1. The treatments indicated below are for use in conjunction with resurfacing, planing, or excavations located beyond the edge line of the traveled lanes.
2. The treatments indicated below are applicable for pavement/shoulder drop-offs and for locations where foreslopes "A/B" are steeper than 3:1.
3. Where the drop-off is located outside the clear zone, no treatment is necessary (see Table II and SCDs MT-95.30, 95.40, or 102.10).
4. Where foreslopes "A/B" are flatter than 3:1, no treatment is necessary.

D	Method of Drop-off Protection to be used to separate the traffic from the drop-off						
	Drop-off location "X" from traveled lane <4'	Drop-off location "X" from traveled lane 4' - 12'		Drop-off location "X" from traveled lane 12' - 20'		Drop-off location "X" from traveled lane 20' -30'	
		Daytime Only	Night	Daytime Only	Night	Daytime Only	Night
≤ 3"	DRUMS or OPTIONAL WEDGE TREATMENT	NONE	NONE	NONE	NONE	NONE	NONE
> 3" - 5"	DRUMS or OPTIONAL WEDGE TREATMENT	DRUMS	DRUMS	NONE	NONE	NONE	NONE
> 5" - 12"	PB	DRUMS	DRUMS	NONE	NONE	NONE	NONE
> 12" - 24"	PB	DRUMS	PB	DRUMS	DRUMS	NONE	NONE
> 24"	PB	DRUMS	PB	DRUMS	PB	DRUMS	PB

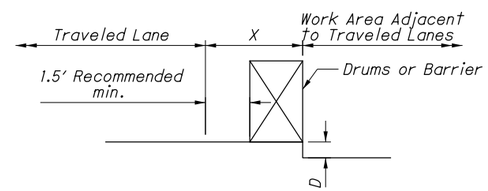

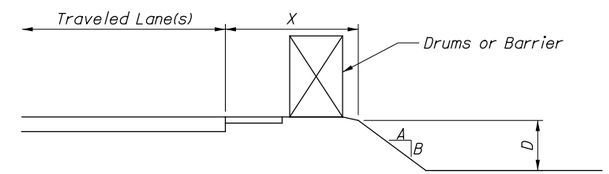

NOTES:

1. It is intended that this drawing be used for treatment of drop-offs that develop during construction operations and that are not otherwise provided for in the construction plans. Where the plans do not provide specific items for labor, equipment, or materials to implement the drop-off treatments specified herein, they shall be included for payment in the lump sum bid for CMS 614 - Maintaining Traffic.
2. Minimum lane widths shall be 10' unless otherwise specified in the plans.
3. While the need for certain advisory signing is noted herein, it is not intended that this be indicative of all signing that may be required to advise or warn motorists, and all requirements of the Ohio Manual of Uniform Traffic Control Devices (OMUTCD) must be fulfilled.
4. In urban or otherwise heavily developed areas where intersections, driveways, pedestrians and/or bicyclists may be present in significant numbers, additional signing and protective measures other than those shown herein may be required.
5. The drop-off treatment selected for use at any given location shall be as appropriate for the prevailing conditions at the site.
6. Where portable barrier is specified, it shall be in accordance with SCD RM-4.1 or 4.2 and with CMS 622.
7. For locations such as at ramps, lane shifts, lane closures, etc., where traffic is required to negotiate a difference in elevation between pavements, the Optional Wedge Treatment shall be provided.
8. Pavement Repairs (or similar work):
   a) Lengths greater than 60' - utilize appropriate treatment from Condition I.
   b) Lengths of 60' or less - repairs shall be effected in accordance with CMS 255.08. Drums may be used as a separator adjacent to the traveled lane.
9. When drums are specified for a drop-off condition, a minimum number of 4 drums shall be used. Spacing shall be as indicated in the plans or as specified in the OMUTCD. Provisions shall be made to stabilize the drums (cones) to prevent them from blowing over.
10. When UNEVEN LANES (W8-11) signs or LOW SHOULDER (W8-9) signs are required, they shall be placed 750' in advance of the condition on all intersecting entrance ramps within the limits of the condition. When the drop-off condition extends more than 0.5 miles, additional signs should be erected at intervals of 1.0 mile or less.
11. Cones may be substituted for drums as follows:
    a) Cones used for daytime traffic control shall have a minimum height of 28".
    b) Cones used for nighttime traffic control shall have a minimum height of 42".
    c) Cones used at night shall be reflectorized.
    d) Use of cones at night shall be prohibited along tapers.
    e) Intermixing of drums and cones within the same run of barrier protection shall not be permitted.
12. Where drums are used and their presence would reduce traveled lane widths to less than 10', drums may be placed on the opposite level from that of traffic, provided the drop-off depth does not exceed 5" and approval is granted by the Project Engineer.
13. Portable barrier shall be placed on the same level as the traffic surface and shall not encroach on width(s) designated as the minimum required for traffic use.

CONDITION III

DROP-OFFS BEHIND CURB WHERE CURB IS 6" OR GREATER IN HEIGHT AND THE LEGAL SPEED IS 40 MPH OR LESS

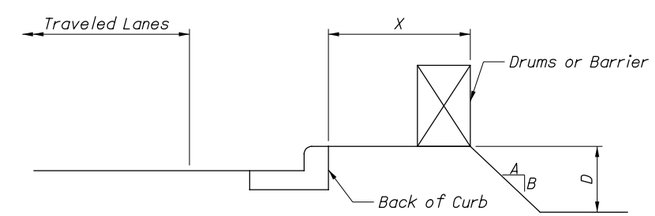

X	D	A/B	Treatment Required	
			Day	Night
0' - 10'	< 12"	Any	None	Drums
0' - 10'	> 12"	Any	Drums	Drums
>10'	Any	Any	None	None

THIS DRAWING REPLACES MT-101.90 DATED 10-19-2012.

STATE OF OHIO DEPARTMENT OF TRANSPORTATION
Michael Blue 7-19-2013
ADMINISTRATOR DATE

STDS. ENGINEER Stargell

OFFICE OF ROADWAY ENGINEERING

STANDARD ROADWAY CONSTRUCTION DRAWING

DROP-OFFS IN WORK ZONES

SCD NUMBER MT-101.90

TEMPORARY SIGN SUPPORT REQUIREMENTS

PLACEMENT OF SIGNS

1A. Lateral placement to nearest edge of signs shall be as follows:

a) On the right side of the road for approaching traffic (except for dual-mounted signs and signs designated in the plans for left-side mounting).
b) Curbed roadway - minimum 2′ behind face of curb.
c) Uncurbed roadway - 12′ from edge of traffic lane or 6′ from edge of paved or useable shoulder, whichever is greater.
d) Behind guardrail or portable barrier - See table

SIGN OFFSET

Barrier Type / Support Class	BEHIND FACE OF GUARDRAIL	BEHIND FACE OF PORTABLE BARRIER
Class A Supports	2′ Preferred 1′ Minimum	1′ Minimum*
Class B Supports	6.5′ Minimum	1′ Minimum*

*unless barrier top mounting is required by the plans

1B. Vertical clearance of signs, as measured from near side roadway edge, shall be as follows:

a) Rural - 5′ when parked cars, construction equipment, etc. will not obscure sign visibility.
b) Rural areas with parked cars or construction equipment - 7′
c) Urban - 7′
d) Care shall be taken to assure that signs will not be obscured by construction equipment, trees, weeds or other obstacles. Brush, weeds or grass within the right-of-way shall be trimmed as necessary.
e) For signing which will remain for three days or less, minimum vertical clearance shall be 1′ from the roadway to bottom of sign.

CLASSES OF SUPPORTS

2A. The Contractor shall choose sign supports of adequate strength and with adequate foundations and anchorage to support the sign sizes erected. Sign supports which fail under typical wind load conditions shall be immediately modified or replaced with a support of adequate strength.

2B. All temporary sign supports shall be of the following types:

CLASS A:

Class A supports shall include the following:

a) All No. 2 and No. 3 posts when installed singly or in pairs (side-by-side) according to the details of Standard Construction Drawings (SCDs) TC-41.10 and TC-41.20.
b) Wood posts as shown in Solid Wood Posts detail.
c) All breakaway connection beam supports, when installed according to the proper details shown on SCD TC-41.10 with a minimum clear distance between supports of 7′ for supports larger than 6 x 9.
d) Any breakaway post or post and connection which are certified as per CMS 614.03.
e) Portable supports.

Use of Class A supports shall be required at unprotected locations on ODOT's roadway system. They may also be used on other roadway systems.

CLASS B:

Class B supports shall include the following:

a) All beam type supports without breakaway connections.
b) Supports similar to but larger than permitted for Class A.

Class B supports shall be used only at the following locations:

a) Within the clear zone where protected by guardrail or concrete barrier or where positively protected from traffic such as on retaining walls.
b) Outside the clear zone.

2C. All Class A and B supports shall be NCHRP 350 compliant.

SUPPORTS AND SIGNS

3A. Supports for signs which will remain in place more than three days should be fixed rather than portable except in situations where the sign must rest on permanent pavement or other surface which would be damaged by insertion of post type supports.

3B. Portable signing, including portable supports, ballasting of the supports, and signs shall be NCHRP 350 compliant.

3C. Ballasting of portable supports shall be in accordance with NCHRP 350 testing of the subject support.

THIS DRAWING REPLACES MT-105.10 DATED 07-20-2012.

STATE OF OHIO DEPARTMENT OF TRANSPORTATION
Michael Blue 7-19-2013
ADMINISTRATOR DATE

STDS. ENGINEER Stargell

OFFICE OF ROADWAY ENGINEERING

STANDARD ROADWAY CONSTRUCTION DRAWING

TEMPORARY SIGN SUPPORT

SCD NUMBER MT-105.10

CLASS A SUPPORTS FIXED

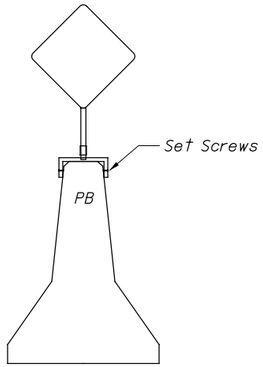

TYPE 1

Fasten to Top of PB with Expansion Bolts, etc.

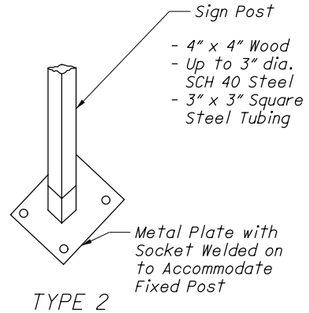

TYPE 2

CLASS A SUPPORTS STUBBING STANDARD

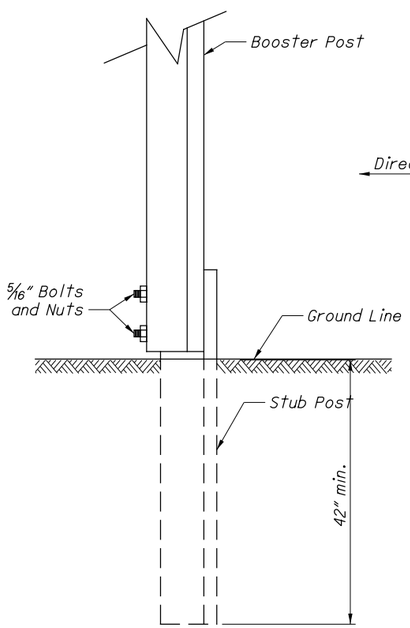

NOTES:

1. For use with No. 2 or No. 3 posts.
2. Booster post shall be the same or 1 lb/ft less than stub post.
3. When the booster post is smaller than the stub post, the booster post shall be mounted in front of the stub post.
4. When the booster post is the same size as the stub post, the booster post shall be mounted behind the stub post.
5. Bolts and nuts and other fasteners shall be steel or aluminum.
6. A minimum of two bolts and nuts or other fasteners shall be used per post assembly.
7. With steel bolts, the minimum center-to-center spacing between bolts shall be 4".
8. Stub height should be limited to 4" above the ground when using the aluminum bolts for the connection.

SOLID WOOD POSTS

TOP VIEW

When flat sheet signing is provided, bolt the flat sheet directly to the wood posts. Do not use U-Channels.

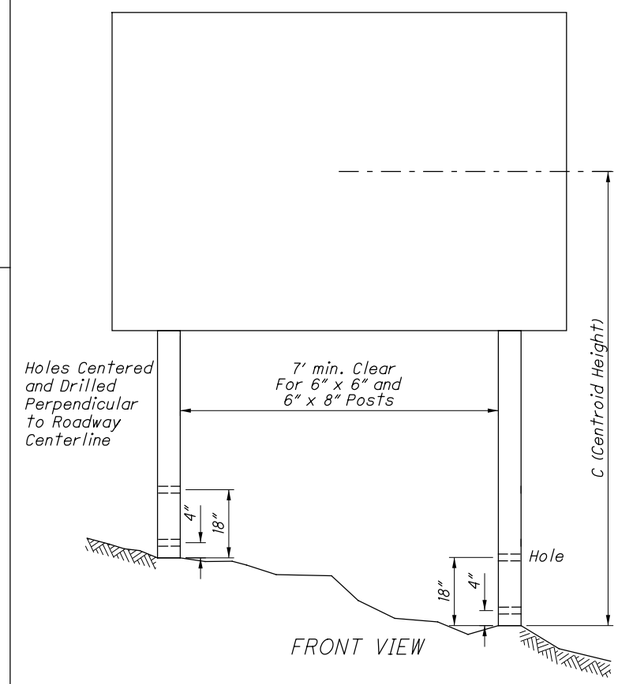

FRONT VIEW

NORMAL POST SIZE (IN)	HOLE DIAMETER (IN)	NO. OF POSTS PERMITTED IN 7' PATH IN EXPOSED LOCATIONS	MINIMUM RECOMMENDED EMBEDMENT DEPTH (FT)
4 X 4	NONE	2	3.5
4 X 6	1 ½	2	4
6 X 6	2	1	4.5
6 X 8	3	1	5

DESIGN CHART FOR WOOD POSTS TWO-POST INSTALLATIONS

(Nominal Post Size in Inches)

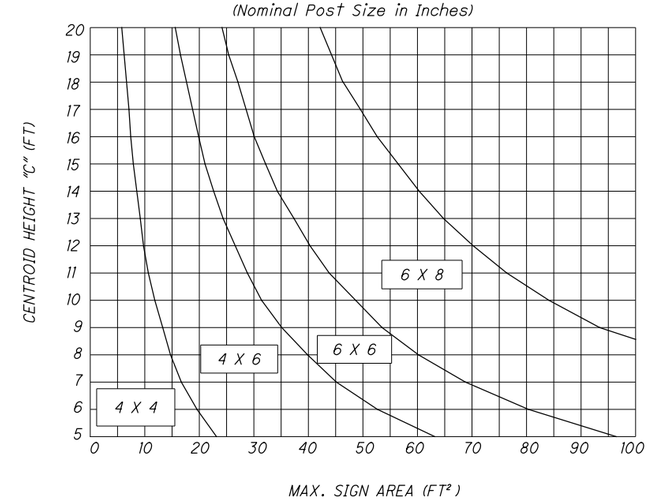

THIS DRAWING REPLACES MT-105.10 DATED 07-20-2012.

STATE OF OHIO DEPARTMENT OF TRANSPORTATION

Michael Blue 7-19-2013

ADMINISTRATOR DATE

STDS. ENGINEER Stargell

OFFICE OF ROADWAY ENGINEERING

STANDARD ROADWAY CONSTRUCTION DRAWING

TEMPORARY SIGN SUPPORT

SCD NUMBER MT-105.10

2 / 2

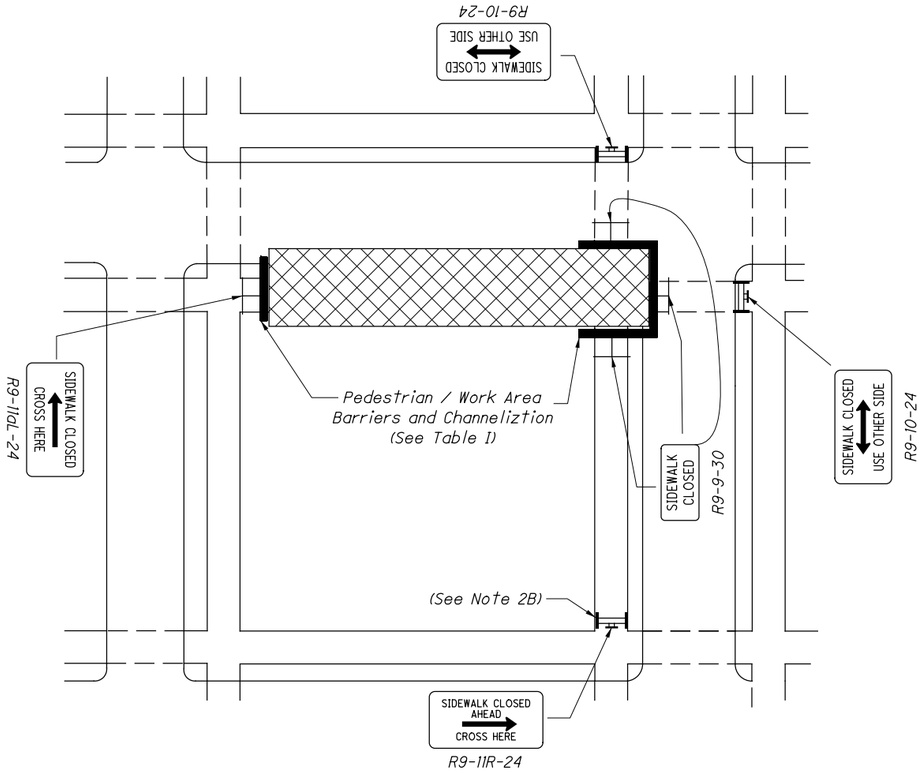

DETOUR TO OTHER SIDE OF STREET

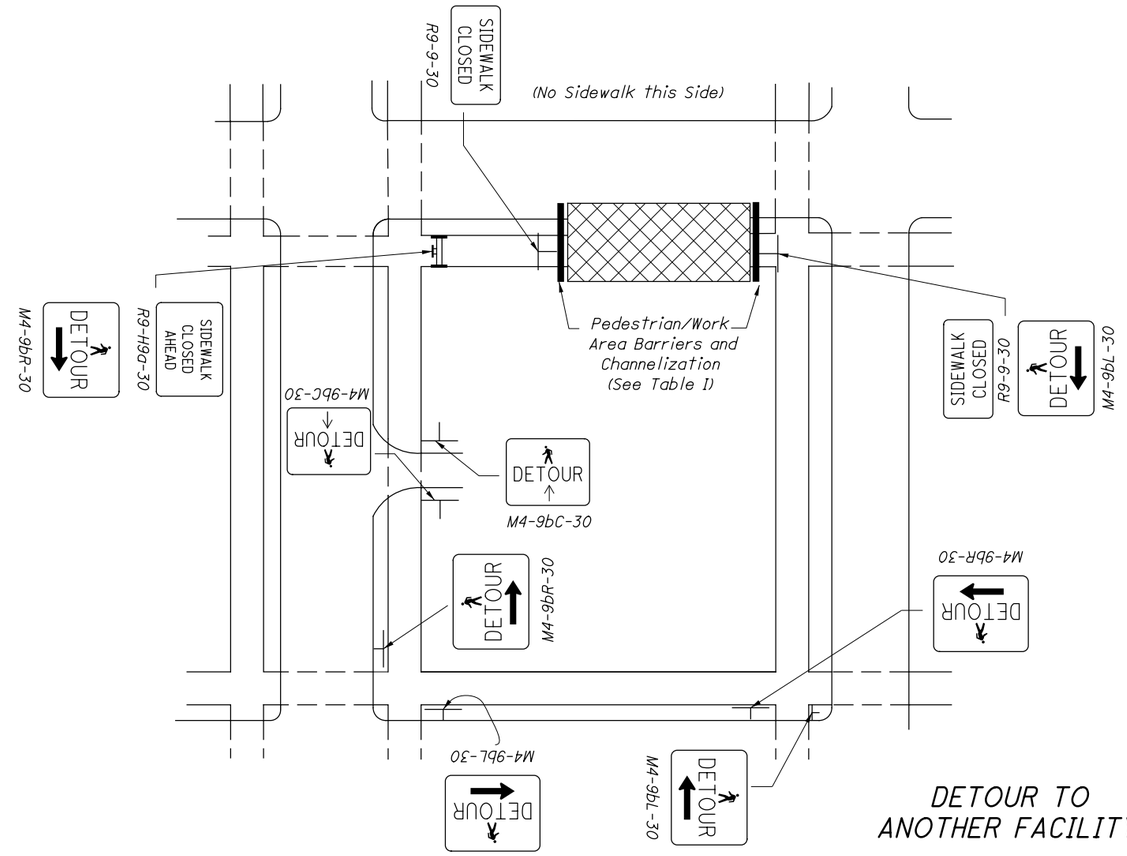

DETOUR TO
ANOTHER FACILITY

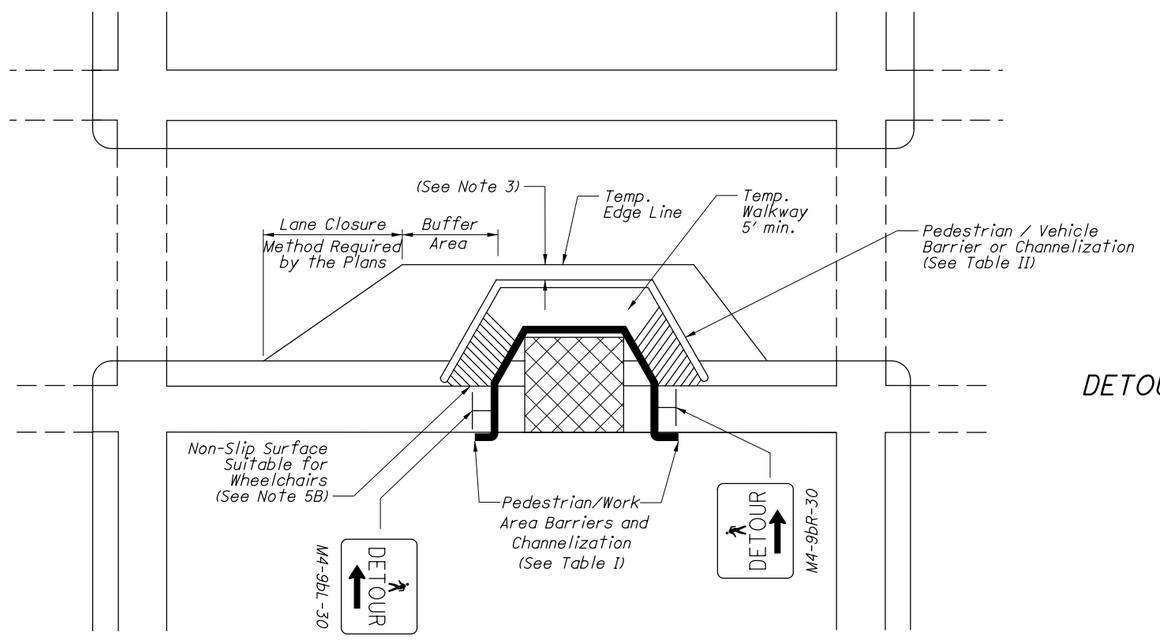

DETOUR TO TEMPORARY WALKWAY ("RUNAROUND")
ON ROADWAY

LEGEND

WORK AREA

TYPE I BARRICADE
WITH SIGN

THIS DRAWING REPLACES MT-110.10 DATED 07-20-2012.

STATE OF OHIO DEPARTMENT OF TRANSPORTATION

Michael Blue 7-19-2013
ADMINISTRATOR DATE

STDS. ENGINEER Stargell

OFFICE OF ROADWAY ENGINEERING

STANDARD ROADWAY CONSTRUCTION DRAWING

PEDESTRIAN DETOUR METHODS

SCD NUMBER MT-110.10

NOTES:

GENERAL

1A. This drawing presents traffic controls only for pedestrian traffic. Vehicular traffic control shall be provided as required.

1B. The purpose of the traffic control devices provided herein is to divert and guide pedestrians whose path would otherwise enter the work area. The Contractor must take additional precautions as appropriate to protect other pedestrians or residents (including children) from exposure to hazards resulting from construction operations.

SIGNS AND BARRICADES

2A. All signs and barricades shall be placed so that they do not cause a hazard for pedestrians. All signs, not on barricades or channelizing devices, near or over active sidewalks shall have a minimum 7′ vertical clearance. Signs mounted on barricades or channelizing devices shall have a minimum 1′ clearance above the sidewalk.

2B. Advance signing for sidewalk closure shall be mounted on Type I Barricade, placed such that they will not block more than one-half the sidewalk.

PAVEMENT MARKING

3. Maintain 2′ minimum when possible, between the work zone edge line and the barrier or channelizing device separating the pedestrian path from the vehicle path.

STAGED WORK

4. For repair or reconstruction work involving sidewalks on both sides of the street, the work shall be staged so that one side is rebuilt before the other is disrupted.

TEMPORARY WALKWAYS

5A. Pedestrian walkways constructed by the Contractor shall be kept free of any obstructions or hazards including holes, debris and mud. Other walkways damaged or dirtied by the Contractor shall be immediately repaired or cleaned.

5B. For construction of temporary walkway the maximum grade shall be 5 percent unless specified otherwise in the plans. The maximum cross slope shall be 2 percent.

LIGHTING AND DELINEATION

6A. At night, in otherwise unlighted areas, pedestrian-channelizing devices and barricades and pedestrian detour signs shall be provided with lighting as follows:

a) Illumination shall provide a minimum of 1.2 foot-candles on temporary walkways.
b) Illumination shall be controlled by photocells.
c) Illumination fixtures may consist of floodlights or other protected fixtures mounted at least 10′ above ground.
d) Illumination supports may be standard highway lighting poles, 4″ x 4″ wood posts or other supports approved by the Engineer.

6B. For barricades and channelizing devices located between the pedestrian way and the vehicle travel lane in unlighted areas, the devices shall be delineated or lighted at night as follows:

a) Delineation of the portable barrier (PB) located between the vehicle lane and the pedestrian path shall be by barrier reflectors on the vehicle side of the PB and by object markers as per Standard Construction Drawing (SCD) MT-101.70.
b) Channelizing devices other than PB shall be provided with Type C steady burning lights on the vehicle side of the channelizer.

CHANNELIZATION REQUIREMENTS

7A. All channelization devices used to separate pedestrians from the work area or from the vehicular lane shall be as determined from the adjacent tables.

7B. Wood railing shall be a min. of a 2″ x 4″ rail at 32″ above ground. It shall be secured to 2″ x 4″ posts at not more than 6′ spacing with secure attachment hardware. It shall be installed and braced to be essentially rigid and able to support the following loads:

a) A horizontal transverse load of 100 pounds at each post top.
b) A vertical load of 250 pounds at midpoint between each post.

7C. Wood snow fence shall be nominally 42″ high, securely supported by wood or steel posts at 6′ maximum spacing. Plastic/nylon construction fence shall be bright orange. It shall be securely fastened to wood or metal posts at not more than 6′ spacing. It shall be nominally 42″ high and the top edge shall not sag below 30″ (12″ max. sag). Either of the fence sections with extensive broken slots or holes greater than 12″ x 12″ shall be repaired or replaced.

7D. Chain link fence, Type CLT shall conform to CMS 607 and appropriate details on Roadway Standard Construction Drawings F-1.1, F-3.1 and F-3.2, except that materials need not be new nor shall certification and tests be required.

7E. Plywood walls shall be a minimum of ⅝″ exterior plywood, supported by a 2″ x 4″ or heavier framing securely anchored and buttressed to resist wind load and/or persons. They shall be designed for a minimum wind loading of 30 pounds per square foot (or larger if local codes require). Height of the wall shall be not less than 7′ above the walkway and if within range of thrown objects, shall be of sufficient height to screen pedestrians and passing cars.

7F. When PB is provided, it shall be 32″ PB as per CMS 622. Delineation of PB shall be as per SCD MT-101.70.

7G. Barrier located along a "runaround" within the roadway pavement shall meet the following requirements:

a) Be a minimum of 36″ in height and continuous with the ground surface.
b) Extend along the entire length of the runaround.
c) Have no breaks or gaps along the full length of the barrier.
d) Have a solid, continuous bottom rail between 4″ and 12″ in height.
e) Be of high contrast color and material.
f) Provide temporary ramps and boardwalks as required to ensure a smooth and continuous surface that complies with Americans with Disabilities Act Accessibility Guidelines.

BARRIER AND CHANNELIZING DEVICE SELECTION TABLES

TABLE I - CHANNELIZATION TYPE WHEN USED BETWEEN THE PEDESTRIAN WALKWAY AND THE WORK AREA

DISTANCE FROM WORK ACTIVITY TO CHANNELIZATION	WORK CHARACTERISTICS *					
	< 2 FT DROPOFF	2 - 5 FT DROPOFF	> 5 FT DROPOFF	DIRT/MUD SPLASHED	EQUIPMENT WHICH MOVES OR HAS EXPOSED MOVING PARTS	OPERATION WHICH THROWS STONE/ETC.
< 5 ft.	A-E	B-E	C-D	D	D-E	D
5 - 10 ft.	A-E	B-E	B-E	D	B-E	D
> 10 - 30 ft.	A-E	A-E	B-E	N/A	A-E	D
> 30 ft.	N/A	A-E	B-E	N/A	A-E	D

* These requirements shall not apply to paving, grinding or other similar operations.

TABLE II - CHANNELIZATION TYPE WHEN USED BETWEEN THE PEDESTRIAN WALKWAY AND THE VEHICULAR LANE

DISTANCE FROM EDGE OF TRAFFIC LANE TO FACE OF CHANNELIZATION	SPEED LIMIT (MPH)		
	25	30 - 40	> 40
0 - 2 ft.	E	E	E
> 2-6 ft.	B-E	E	E
> 6 ft.	B-E	B-E	E

SELECTION LIST

A. Wood Railing
B. Snow Fence, Wood or Orange Plastic Construction Fence.
C. Chain Link Fence, Type CLT
D. Plywood Wall
E. Portable Barrier

THIS DRAWING REPLACES MT-110.10 DATED 07-20-2012.

STATE OF OHIO DEPARTMENT OF TRANSPORTATION
Michael Bline 7-19-2013
ADMINISTRATOR DATE

STDS. ENGINEER Stargell

OFFICE OF ROADWAY ENGINEERING

STANDARD ROADWAY CONSTRUCTION DRAWING
PEDESTRIAN DETOUR METHODS

SCD NUMBER MT-110.10

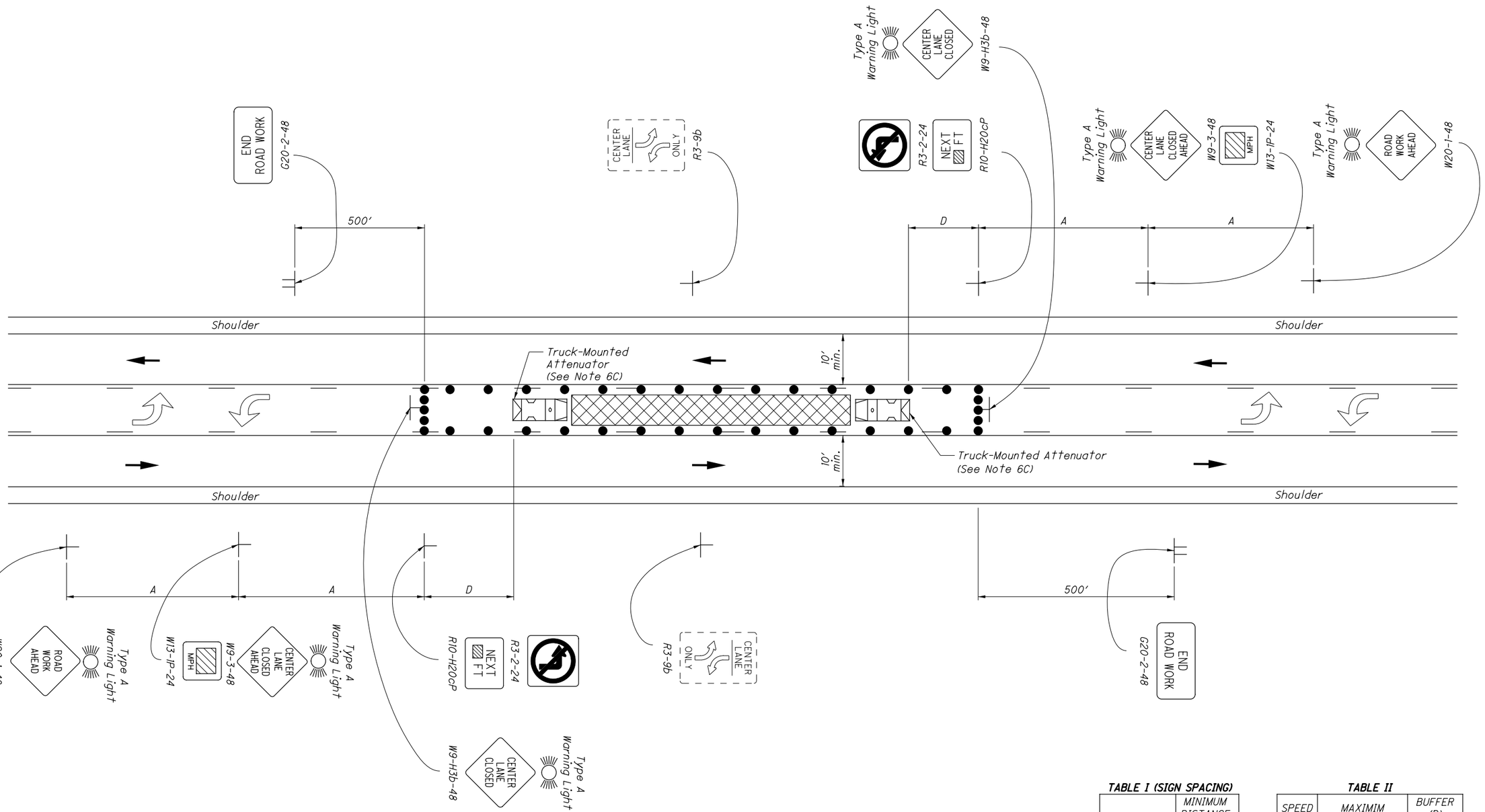

LEGEND

- WORK AREA
- DRUMS/CONES
- 2-WAY LEFT-TURN MARKING
- DIRECTION OF TRAVEL
- SHADOW VEHICLE

TABLE I (SIGN SPACING)

ROAD TYPE	MINIMUM DISTANCE (FT)
	A
URBAN (≤ 40 MPH)	100
URBAN (45-50 MPH)	350
RURAL (55 MPH)	500

TABLE II

SPEED LIMIT (MPH)	MAXIMIM DRUM SPACING (FT)	BUFFER (D) (FT) MINIMUM
25	25	155
30	30	200
35	35	250
40	40	305
45	40	360
50	40	425
55	40	495

THIS DRAWING REPLACES MT-95.60 DATED 7-20-2012.

STATE OF OHIO DEPARTMENT OF TRANSPORTATION

Michael Blue — 7-19-2013

ADMINISTRATOR — DATE

STDS. ENGINEER: Stargell

OFFICE OF ROADWAY ENGINEERING

STANDARD ROADWAY CONSTRUCTION DRAWING

CLOSURE OF TWO-WAY LEFT TURN LANE

SCD NUMBER: MT-95.60

NOTES:

SIGNING

1A. The location of the Advance Warning Signs should be adjusted to provide for adequate sight distance for the existing vertical and horizontal roadway alignment. The distances shown are minimums.

1B. Sign spacing should be adjusted to avoid conflict with existing signs. Minimum spacing to existing signs shall be 200'.

1C. The Advisory Speed (W13-1P) plaque shall be used when specified in the plan.

1D. If the lane closure will exist for more than one day, existing Two-Way Left Turn Only (R3-9b) signs in the work area shall be removed or covered.

1E. END ROAD WORK (G20-2) signs are only required for lane closures of more than one day.

1F. 36" warning signs may be used when the approach speed limit is 40 mph or less.

FLASHING WARNING LIGHTS

2. Type A flashing warning lights shown on the ROAD WORK AHEAD (W20-1) signs and on the CENTER LANE CLOSED AHEAD (W9-3) and the CENTER LANE CLOSED (W9-H3b) signs are required whenever a night lane closure is necessary.

DRUMS / CONES

3A. Drum spacing shall be as follows:

a) Spacing along the closure shall be as specified in Table II.
b) A minimum of five drums shall be placed laterally at each end of the closed lane as shown in the drawing.

3B. Cones may be substituted for drums as follows:

a) Cones used for daytime traffic control shall have a minimum height of 28".
b) Cones used for nighttime traffic control shall have a minimum height of 42".

3C. Provisions shall be made to stabilize the cones and drums to prevent them from blowing over.

3D. Intermixing of channelizing devices within the same run will not be permitted. Either drums shall be used for the entire run of channelizeation, or cones shall be for the entire run.

PAVEMENT MARKING / RAISED PAVEMENT MARKERS (RPMs)

4. If the construction operation requires the lane closure for more than one day then the following shall be performed:

a) The existing conflicting reflectors from the RPMs shall be removed.
b) The appropriate color work zone edge lines shall be applied. Existing conflicting pavement markings shall be removed or covered as per Construction and Material Specifications (CMS) 614.11G.
c) Work zone pavement markings for transition areas (lane shifts) shall be as called for in the plans.
d) Work zone pavement markings which would conflict with the final traffic lanes shall be removable (CMS 740.06, Type 1) tape unless the area will be resurfaced prior to project completion.
e) After completion of the work, pavement markings other than CMS 740.06, Type I shall be removed in accordance with CMS 641.10. The original markings and raised pavement marker reflectors shall be restored at no additional cost unless separately itemized in the plans.
f) Existing markings which will be covered by portable barrier do not need to be removed.

EQUIPMENT / MATERIALS STORAGE

5. All material and equipment shall be removed from the closure and the work area when no work is being done.

SHADOW VEHICLE

6A. The shadow vehicle shall be in place and unoccupied whenever workers are in the work area.

6B. The shadow vehicle shall be equipped with a high-intensity yellow rotating, flashing, oscillating, or strobe light(s).

6C. The vehicle shall be equipped with a truck-mounted attenuator when called for in the plans.

6D. The vehicle shall be removed from the pavement whenever workers are not in the work area.

6E. Other protective devices may be used in lieu of the shadow vehicle shown when approved by the Engineer.

THIS DRAWING REPLACES MT-95.60 DATED 7-20-2012.

STATE OF OHIO DEPARTMENT OF TRANSPORTATION
Michael Blue 7-19-2013
ADMINISTRATOR DATE

STDS. ENGINEER Stargell

OFFICE OF ROADWAY ENGINEERING

STANDARD ROADWAY CONSTRUCTION DRAWING
CLOSURE OF TWO-WAY LEFT TURN LANE

SCD NUMBER MT-95.60

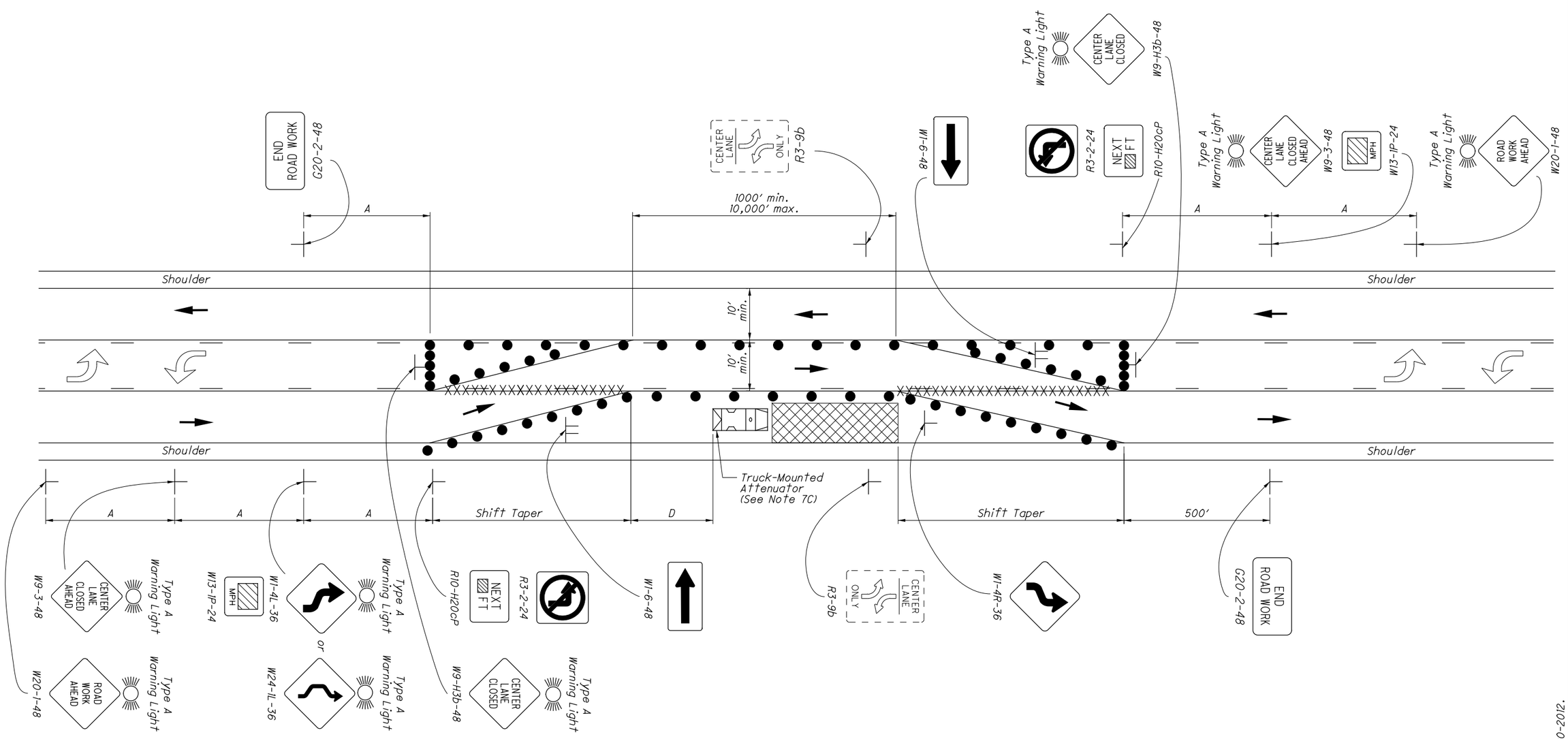

LEGEND

- WORK AREA
- DRUMS/CONES
- REMOVE EXISTING MARKINGS
- 2-WAY LEFT-TURN MARKING
- DIRECTION OF TRAVEL
- SHADOW VEHICLE

TABLE I (SIGN SPACING)

ROAD TYPE	MINIMUM DISTANCE (FT)
	A
TWO-LANE (≤ 40 MPH)	100
TWO-LANE (45-50 MPH)	350
TWO-LANE (55 MPH)	500

TABLE II

SPEED LIMIT (MPH)	SHIFT TAPER RATE MINIMUM	SHOULDER TAPER RATE MINIMUM	MAXIMUM DRUM SPACING (FT)	BUFFER (D) (FT) MINIMUM
25	11:1	4:1	25	155
30	15:1	5:1	30	200
35	21:1	7:1	35	250
40	27:1	9:1	40	305
45	45:1	15:1	40	360
50	50:1	17:1	40	425
55	55:1	19:1	40	495

THIS DRAWING REPLACES MT-95.61 DATED 7-20-2012.

STATE OF OHIO DEPARTMENT OF TRANSPORTATION

Michael Blue 7-19-2013

ADMINISTRATOR DATE

STDS. ENGINEER Stargell

OFFICE OF ROADWAY ENGINEERING

STANDARD ROADWAY CONSTRUCTION DRAWING

CLOSURE OF THRU LANE OF THREE LANE SECTION WITH TWO-WAY LEFT TURN LANE

SCD NUMBER MT-95.61

NOTES:

SIGNING

1A. The location of the Advance Warning signs should be adjusted to provide adequate sight distance for the existing vertical and horizontal roadway alignment. The distances shown are minimums.

1B. Sign spacing should be adjusted to avoid conflict with existing signs. Minimum spacing to existing signs shall be 200'.

1C. The Advisory Speed (W13-1P) plaque shall be used when specified in the plan.

1D. If the lane closure will exist for more than one day, existing Two-Way Left Turn Only (R3-9b) signs in the work area shall be removed or covered.

1E. END ROAD WORK (G20-2) signs are only required for lane closures of more than one day.

1F. 36" warning signs may be used when the approach speed limit is 40 mph or less.

1G. Where the shifted section is longer than 600', a Reverse Curve (W1-4) sign shall be used to show the initial shift and a second W1-4 sign shall be used to show the return to the normal alignment. Where the tangent distance along the shifted section is less than 600', the Double Reverse Curve (W24-1) sign should be used in place of the first W1-4 sign. The second W1-4 sign should be omitted.

FLASHING WARNING LIGHTS

2. Type A flashing warning lights shown on the Advance Warning Signs are required whenever a night lane closure is necessary, as follows:

   ROAD WORK AHEAD (W20-1)
   CENTER LANE CLOSED AHEAD (W9-3)
   CENTER LANE CLOSED (W9-H3b)
   Reverse Curve (W1-4)
   Double Reverse Curve (W24-1)

   Flashing warning lights are not required beyond the advance signs.

DRUMS / CONES

3A. Drum spacing shall be as follows:

   a) The maximum drum spacing along tapers and along tangent sections shall be as shown in Table II.
   b) A minimum of five drums shall be placed laterally at each end of the closed lane as shown in the drawing.

3B. Cones may be substituted for drums as follows:

   a) Cones used for daytime traffic control shall have a minimum height of 28".
   b) Cones used for nighttime traffic control shall have a minimum height of 42".

3C. Provisions shall be made to stabilize the cones and drums to prevent them from blowing over.

3D. Intermixing of channelizing devices within the same run will not be permitted. Either drums shall be used for the entire run of channelization, or cones shall be used for the entire run.

SHIFT TAPER

4. The minimum acceptable length for the shift taper shall be determined by multiplying the width of offset by the shift taper rate. The shift taper rate is provided in Table II.

PAVEMENT MARKING / RAISED PAVEMENT MARKERS (RPMs)

5. If the construction operation requires the lane closure for more than one day then the following shall be performed:

   a) The existing conflicting reflectors from the RPMs shall be removed.
   b) The appropriate color work zone edge lines shall be applied. Existing conflicting pavement markings shall be removed or covered as per Construction and Materials Specifications (CMS) 614.11 G.
   c) Work zone pavement markings for transition areas (lane shifts) shall be as called for in the plans.
   d) Work zone pavement markings which would conflict with the final traffic lanes shall be removable (CMS 740.06, Type I) tape unless the area will be resurfaced prior to project completion.
   e) After completion of the work, pavement markings other than CMS 740.06, Type I shall be removed in accordance with CMS 641.10. The original markings and raised pavement marker reflectors shall be restored at no additional cost unless separately itemized in the plans.
   f) Existing markings which will be covered by portable barrier do not need to be removed.

EQUIPMENT / MATERIALS STORAGE

6. All material and equipment shall be removed from the closure and the work area when no work is being done.

SHADOW VEHICLE

7A. The shadow vehicle shall be in place and unoccupied whenever workers are in the work area.

7B. The shadow vehicle shall be equipped with a high-intensity yellow rotating, flashing, oscillating, or strobe light(s).

7C. The vehicle shall be equipped with a truck-mounted attenuator when called for in the plans.

7D. The vehicle shall be removed from the pavement whenever workers are not in the work area.

7E. Other protective devices may be used in lieu of the shadow vehicle shown when approved by the Engineer.

THIS DRAWING REPLACES MT-95.61 DATED 7-20-2012.

STATE OF OHIO DEPARTMENT OF TRANSPORTATION
Michael Blue 7-19-2013
ADMINISTRATOR DATE

STDS. ENGINEER Stargell

OFFICE OF ROADWAY ENGINEERING

STANDARD ROADWAY CONSTRUCTION DRAWING
CLOSURE OF THRU LANE OF THREE LANE SECTION WITH TWO-WAY LEFT TURN LANE

SCD NUMBER MT-95.61

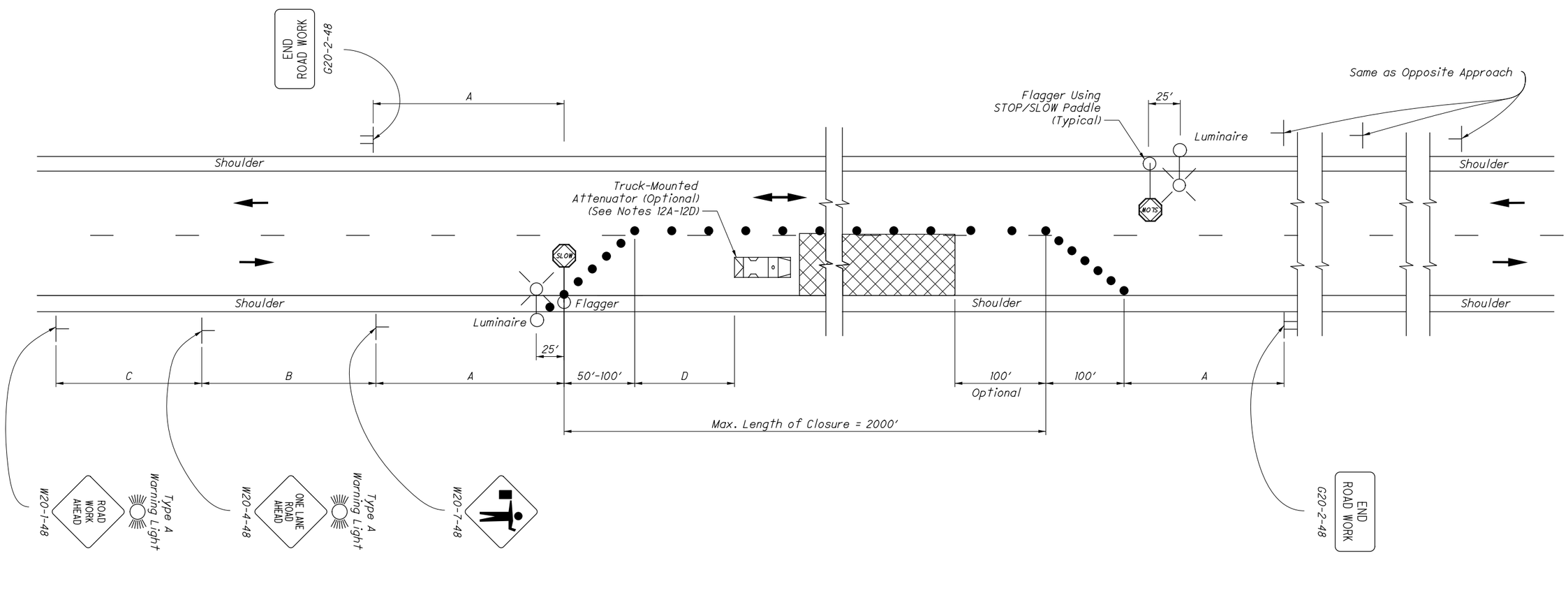

TABLE I (SIGN SPACING)

ROAD TYPE	DISTANCE BETWEEN SIGNS (FT)		
	A	B	C
Two-Lane (≤ 40 MPH)	100	100	100
Two-Lane (45-50 MPH)	350	350	350
Two-Lane (55-60 MPH)	500	500	500

TABLE II

SPEED LIMIT (MPH)	BUFFER (D) (FT) MIN.
25	155
30	200
35	250
40	305
45	360
50	425
55	495
60	570

LEGEND

- WORK AREA
- DRUMS/CONES
- DIRECTION OF TRAVEL
- SHADOW VEHICLE

THIS DRAWING REPLACES MT-97.10 DATED 7-20-2012.

STATE OF OHIO DEPARTMENT OF TRANSPORTATION

Michael Blue — ADMINISTRATOR — 7-19-2013 DATE

STDS. ENGINEER: Stargell

OFFICE OF ROADWAY ENGINEERING

STANDARD ROADWAY CONSTRUCTION DRAWING

FLAGGER CLOSING 1 LANE OF A 2-LANE HIGHWAY - STATIONARY OPERATION

SCD NUMBER: MT-97.10

NOTES:

FLAGGERS

1. Flaggers, one for each direction, shall be used to control traffic continuously for as long as a one lane operation is in effect. The flaggers shall be able to communicate with each other at all times.

LENGTH OF CLOSURE

2. Several small work areas close together should be combined into one work zone. However, the closure shall not be more than 2000′ long unless approved by the Engineer. The minimum length between closures shall be 2000′. Only one side of the road shall be closed in any one work zone.

SIGN LOCATION AND SPACING

3A. The minimum spacing between work zone signs is shown in Table I. Maximum spacing should not be greater than 1.5 times the distances shown in Table I.

3B. Sign spacing should be adjusted to avoid conflict with existing signs. Minimum spacing to existing signs shall be 200′ for speeds of 45 mph or less and a minimum of 400′ for speeds of 50 mph or greater.

3C. The location of the advance warning signs should be adjusted to provide for adequate sight distance for the existing vertical and horizontal roadway alignment.

ADJUSTMENTS FOR SIGHT DISTANCE

4. The location of the flagger station and the advance warning signs should be adjusted to provide for adequate sight distance for the existing vertical and horizontal roadway alignment.

BASIC SIGNING

5A. ROAD WORK AHEAD (W20-1) signs shall be provided on entrance ramps or roadways entering the work limits.

5B. END ROAD WORK (G20-2) signs are only required for lane closures of more than 1 day. It is intended that these signs be placed on the mainline, on all exit ramps, and on roadways exiting the work limits.

5C. Overlapping of signing for adjacent projects should be avoided where the messages could be confusing. Any ROAD WORK AHEAD (W20-1) or END ROAD WORK (G20-2) sign which falls within the limits of another traffic control zone shall be omitted or covered during the period when both projects are active.

SIGNING DETAILS

6A. The Advisory Speed (W13-1P) plaque shall be used when specified in the plan.

6B. 36″ warning signs may be used when the approach speed limit is 40 mph or less.

FLASHING WARNING LIGHTS

7. Type A flashing warning lights shown on the ROAD WORK AHEAD (W20-1) signs and on the LANE CLOSED AHEAD (W20-5) signs are required whenever a night lane closure is necessary.

DRUMS / CONES

8A. Drum spacing shall be as follows:

a) Spacing along the closure shall be 40′ center-to-center.
b) Spacing along the approach taper shall be 10′ center-to-center.

8B. Cones may be substituted for drums as follows:

a) Cones used for daytime traffic control shall have a minimum height of 28″.
b) Cones used for nighttime traffic control shall have a minimum height of 42″.
c) Use of cones at night shall be prohibited along tapers.

8C. Provisions shall be made to stabilize the cones and drums to prevent them from blowing over.

8D. A minimum of two drums shall be used to close the paved shoulder.

EQUIPMENT / MATERIALS STORAGE

9A. No equipment or material shall be located within the taper or buffer zone.

9B. When no work is being performed, all material and equipment shall be stored as per CMS 614.03.

AREA ILLUMINATION

10A. Adequate area illumination of each flagger station shall be provided at night. Use of portable flood lighting is acceptable. Luminaires shall be located adjacent to each flagger station.

10B. To ensure the adequacy of floodlight placement and the elimination of glare, the Contractor and the Engineer shall drive through the worksite each night when the lighting is in place. Light placement and shielding shall be adjusted to the satisfaction of the Engineer.

INTERSECTION / DRIVEWAY ACCESS

11. Within the length of closure, provision shall be made to control traffic entering from intersecting streets and major drives as necessary to prevent wrong-way movements and to keep vehicles off of new pavement not ready for traffic. The Contractor shall:

a) Place across the closed lane, either three drums (cones) or barricades, and/or
b) Provide an additional flagger at every public street intersection and major driveway.

Drums (cones) placed across the closed lane shall be located 25′ beyond the projected pavement edges of the driveway or cross highway, as shown in Standard Construction Drawings (SCDs MT-97.11 or MT-97.12. For barricades, see SCD MT-101.60.

Existing STOP signs shall be relocated as necessary to assure proper location for the traffic conditions.

The method of control shall be subject to the approval of the Engineer.

SHADOW VEHICLE

12A. The shadow vehicle shall be in place and unoccupied whenever workers are in the work area. This vehicle shall be removed from the pavement whenver workers are not in the work area.

12B. The shadow vehicle shall be equipped with a high-intensity yellow rotating, flashing, oscillating, or strobe light(s).

12C. The vehicle shall be equipped with a truck-mounted attenuator when called for in the plans.

12D. Other protective devices may be used in lieu of the shadow vehicle shown when approved by the Engineer.

CHIP SEAL OPERATIONS

13. For chip seal operations, additional signing shall be incorporated in the advanced warning area.

a) The LOOSE GRAVEL (W8-7) and FRESH TAR (W21-2) signs shall both be used in advance of the chip seal operation.
b) Repeat the LOOSE GRAVEL sign with a 35 mph Advisory Speed (W13-1) plaque every half mile per CMS 422.09.
c) The FRESH TAR and the LOOSE GRAVEL signs shall both be used for signing of side roads intersecting the work area.

THIS DRAWING REPLACES MT-97.10 DATED 7-20-2012.

STATE OF OHIO DEPARTMENT OF TRANSPORTATION
Michael Blue 7-19-2013
ADMINISTRATOR DATE

STDS. ENGINEER Stargell

OFFICE OF ROADWAY ENGINEERING

STANDARD ROADWAY CONSTRUCTION DRAWING
FLAGGER CLOSING 1 LANE OF A 2-LANE HIGHWAY - STATIONARY OPERATION

SCD NUMBER MT-97.10

PAVEMENT MARKING OPERATION PROCEDURES

NOTES:

GENERAL

1A. In addition to CMS 614, traffic shall be maintained in accordance with the following requirements.

1B. The purpose of the following requirements for traffic control for pavement marking operations is to provide safety for highway users, workers and equipment and to protect the markings from damage during application.

1C. These requirements are the required minimums. If at any time during the application of markings it is found by the Engineer that these minimum traffic control requirements are not achieving the necessary safety and marking protection, additional traffic control shall be implemented at no additional cost.

1D. The Engineer may suspend work in order to relieve traffic congestion at any time.

1E. No work shall be done during peak hours or during any other times which could result in excessive queuing, as determined by the Engineer.

1F. Vehicles transporting flammable pavement marking materials (material supply vehicles) shall not be utilized for lead or trail vehicles or for power broom equipment.

1G. All pavement marking application, protection and support equipment following the line marking machine shall have the traffic control equipment of a shadow vehicle.

1H. Line marking machines shall not be used for sign and cone placement.

CONES AND WET PAINT - KEEP OFF SIGNS

2A. Cones and WET PAINT - KEEP OFF (R11-H6-24) signs shall be placed to protect the line whenever the track-free time exceeds 2 minutes.

2B. These devices shall not be removed until the line has dried to a track-free condition.

2C. Retrieval equipment shall have the traffic control equipment of a shadow vehicle.

2D. Cones shall have a minimum height of 28".

2E. Cones shall be spaced at a maximum distance of 200' to protect the wet line. In areas of traffic congestion, on curves, and at other locations where tracking of the wet line is expected, closer spacings may be required.

2F. The WET PAINT - KEEP OFF (R11-H6-24) signs shall be placed facing traffic as follows:

a) The beginning and end of line application,
b) All side and cross roads, and
c) Maximum intervals of one mile.

2G. When line markings require greater than a two minute drying time or when the actual field conditions exceed two minute drying time, the lane from which the line marking machine applies line markings shall be closed until the line has dried to a totally track-free condition.

IMMOBILE OPERATIONS

3A. When loading material, cleaning or performing other operations in the field, every effort shall be made to have all equipment completely off of the traveled way.

3B. When it becomes necessary to enter upon private property, permission shall be obtained in advance.

3C. When the Contractor cannot remove his equipment from the traveled way, all traffic control devices on the vehicles shall be in operation and flaggers and vehicles shall be stationed to protect the work site and the traveling public.

3D. Two-way traffic shall be maintained.

3E. Flaggers shall be equipped in accordance with CMS 614.08.

AUXILIARY MARKINGS

4. Pavement preparation and placing of auxiliary markings are considered to be stationary operations and traffic control shall be in accordance with plan details, standard construction drawings and the Ohio Manual of Uniform Traffic Control Devices (OMUTCD).

NIGHTTIME OPERATION

5A. Nighttime operation is defined to include the time from sunset to sunrise, and at any other time when there are unfavorable atmospheric conditions or when there is not sufficient natural light to render discernable persons, vehicles, and substantial objects on the highway at a distance of 1000'.

5B. During nighttime conditions the following traffic control shall be provided:

a) Cones shall be reflectorized or equipped with lighting devices for maximum visibility (see OMUTCD 6F.64), and
b) The guide and side-mounted carriages shall be illuminated.

5C. The presence of highway lighting does not waive these requirements.

FLASHING ARROW BOARD

6A. A Type B flashing arrow board shall be from the ODOT approved list. For more information, refer to Supplemental Specification 921 "Arrow Boards."

6B. Arrow boards, when used on two-lane, two-way roadways shall be displayed only in the caution mode.

6C. When not in use, arrow boards shall be tilted horizontally or covered.

TRUCK-MOUNTED ATTENUATOR (TMA)

7A. When called for in the plans the shadow vehicle(s) shall be equipped with a TMA. The TMA must bring a vehicle weighing about 1800 to 4500 pounds and traveling at 60 mph to a safe, controlled stop, per NCHRP criteria.

7B. A shadow vehicle with TMA should be used in accordance with manufacturer's specifications and must meet NCHRP 350 with acceptable written manufacturer certification submitted to the Engineer before the devices are used on the project.

THIS DRAWING REPLACES MT-99.20 DATED 07-20-2012.

STATE OF OHIO DEPARTMENT OF TRANSPORTATION
Michael Blue 7-19-2013
ADMINISTRATOR DATE

STDS. ENGINEER Stargell

OFFICE OF ROADWAY ENGINEERING

STANDARD ROADWAY CONSTRUCTION DRAWING
TRAFFIC CONTROL FOR LONG LINE PAVEMENT MARKING OPERATIONS

SCD NUMBER MT-99.20

PAVEMENT MARKING VEHICLES AND EQUIPMENT

LEAD VEHICLE

8A. A lead vehicle shall be used to warn opposing traffic of the approach of center line and other marking equipment when this equipment extends into the adjacent opposing traffic lane.

8B. The lead vehicle shall precede the "left-of-center" marking equipment a distance that will provide advance safe warning to approaching traffic.

8C. The operator of this unit shall drive ahead of the crest of a vertical curve or around a horizontal curve and wait until the "left-of-center" marking equipment nears and then proceed, maintaining an advance location of 400′ to 600′.

8D. A lead vehicle shall be equipped with the following traffic control devices:

a) A high-intensity yellow rotating, flashing, oscillating, or strobe light(s), clearly visible a minimum of one quarter mile.
b) Lighted headlights and taillights, and
c) A KEEP RIGHT (W24-H4-48) sign and WET PAINT (W24-H3-48) sign mounted a minimum of 5′ above the road surface measured to the bottom of the sign, and visible to opposing traffic.

POWER BROOM EQUIPMENT

9. Power broom equipment shall be equipped and operated during pavement preparations with the following traffic traffic control devices:

a) A high-intensity yellow rotating, flashing, oscillating, or strobe light(s), clearly visible a minimum of one quarter mile.
b) Lighted headlights and taillights, and
c) A Type B flashing arrow board, displayed to the rear, mounted a minimum of 7′ above the road surface, measured to the bottom of of the board.

VEHICLE FOR LAYOUT AND PREMARKING

10. The vehicle used in layout and premarking shall be equipped and operated with the following equipment:

a) A high-intensity yellow rotating, flashing, oscillating, or strobe light(s), clearly visible a minimum of one quarter mile.
b) Lighted headlights and taillights, and
c) A KEEP RIGHT (W24-H4-48) sign mounted a minimum of 5′ above the road surface measured to the bottom of the sign, and visible to opposing traffic.

LINE MARKING MACHINE

11A. All traffic line marking machines shall be equipped and operated with the following traffic control equipment:

a) Three high-intensity yellow rotating, flashing, oscillating, or strobe lights, clearly visible a minimum of one quarter mile, one forward, one on the right rear and one on the left rear of the vehicle.

b) Any one of the following two:

1) A Type B flashing arrow board displayed to the rear, mounted a minimum of 7′ above the road surface, measured to the bottom of the board.

or

2) A DO NOT PASS (R11-H7-48) sign visible to the rear during center line marking on two-lane, two-way roadways and mounted a minimum of 7′ above the road surface, measured to the bottom of the sign. This sign may be used to cover the arrow board when used on two-lane, two-way roadways.

11B. A WET PAINT with Arrow (W24-H2a-24 or W24-H2-48) sign shall face the rear as follows:

a) The sign shall be positioned with the arrow pointing to the wet line.
b) When used, a W24-H2a-24 sign shall be mounted on the side of the vehicle nearest the wet marking material.
c) W24-H2a-24 and W24-H2-48 signs shall be mounted a minimum of 1′ above the road surface, measured to the bottom of the signs.

11C. A KEEP RIGHT (W24-H4-48) sign and WET PAINT (W24-H3-48) sign mounted a minimum of 5′ above the road surface, measured to the bottom of the sign facing opposing traffic when this unit extends into the adjacent opposing traffic lane.

11D. The guide and side-mounted marking carriages shall each be equipped with a clean red flag not less than 24″ square and fastened to a staff of sufficient length so as to permit the flag to move freely of any obstruction.

SHADOW VEHICLE

12A. When required, a shadow vehicle shall be positioned at the track-free end of the wet line.

12B. Shadow vehicles shall be equipped and operated with the following traffic control equipment (Also see Figure 6H-17 & 6H-35 in the OMUTCD):

a) A high-intensity yellowrotating, flashing, oscillating, or strobe light(s), clearly visible a minimum of one quarter mile.

b) Any one of the following two:

1) A Type B flashing arrow board, displayed to the rear, mounted a minimum of 7′ above the road surface, measured to the bottom of the board.

or

2) A DO NOT PASS (R11-H7-48) sign visible to the rear during center line marking on two-lane, two-way roadways and mounted a minimum of 7′ above the road surface, measured to the bottom of the sign. This sign may be used to cover the arrow panel when used on two-lane, two-way roadways.

12C. A WET PAINT with Arrow (W24-H2a-24 or W24-H2-48) sign shall face the rear as follows:

a) The sign shall be positioned with the arrow pointing to the wet line.
b) When used, W24-H2a-24 shall be mounted on the side of the vehicle nearest the wet marking material.
c) W24-H2a-24 signs shall be mounted a minimum of 1′ above the road surface and W24-H2-48 shall be mounted a minimum of 5′ above the road surface, both measured to the bottom of the sign.

MINIMUM PAVEMENT MARKING TRAFFIC CONTROL EQUIPMENT REQUIREMENTS

This table indicates the traffic control equipment which shall be furnished for each type of long line pavement marking operation. In addition, the type of traffic control equipment which shall be furnished when directed by the Engineer is indicated.

EQUIPMENT	PAVEMENT MARKING LINE TYPE (1)					
	CENTER LINE		EDGE LINE		LANE LINE (2) CHANNELIZING LINE (3)	
	LONGER THAN 2 MIN. DRY	2 MIN. OR LESS DRY	LONGER THAN 2 MIN. DRY	2 MIN. OR LESS DRY	LONGER THAN 2 MIN. DRY	2 MIN. OR LESS DRY
LEAD VEHICLE	A	A	C	C	C	C
POWER BROOM EQUIPMENT	B	B	A	A	B	B
LINE MARKING MACHINE	A	A	A	A	A	A
SHADOW VEHICLE	D	A	D	A	LANE CLOSURE REQUIRED (28″ CONES REQUIRED)	A
SHADOW VEHICLE (ADDITIONAL)	C	B	C	B		A
SHADOW VEHICLE (SIGN AND CONE RETRIEVAL)	A	C	A	C		C
SHADOW VEHICLE (SHADOW FOR RETRIEVAL)	A	C	A	C		C

(1) For equipment requirements for auxiliary marking operations see the plans and OMUTCD Part 6.

(2) Includes both dashed and solid lane lines.

(3) Channelizing line segments of 200′ or less shall be considered auxiliary markings, except when applied as components of gore markings sprayed in moving operations separate from the application of transverse lines.

A	Required equipment
B	Equipment required when directed by the engineer
C	Not required
D	Required equipment for sign and cone placement

THIS DRAWING REPLACES MT-99.20 DATED 07-20-2012.

STATE OF OHIO DEPARTMENT OF TRANSPORTATION
Michael Blue 7-19-2013
ADMINISTRATOR DATE

STDS. ENGINEER Stargell

OFFICE OF ROADWAY ENGINEERING

STANDARD ROADWAY CONSTRUCTION DRAWING
TRAFFIC CONTROL FOR LONG LINE PAVEMENT MARKING OPERATIONS

SCD NUMBER MT-99.20

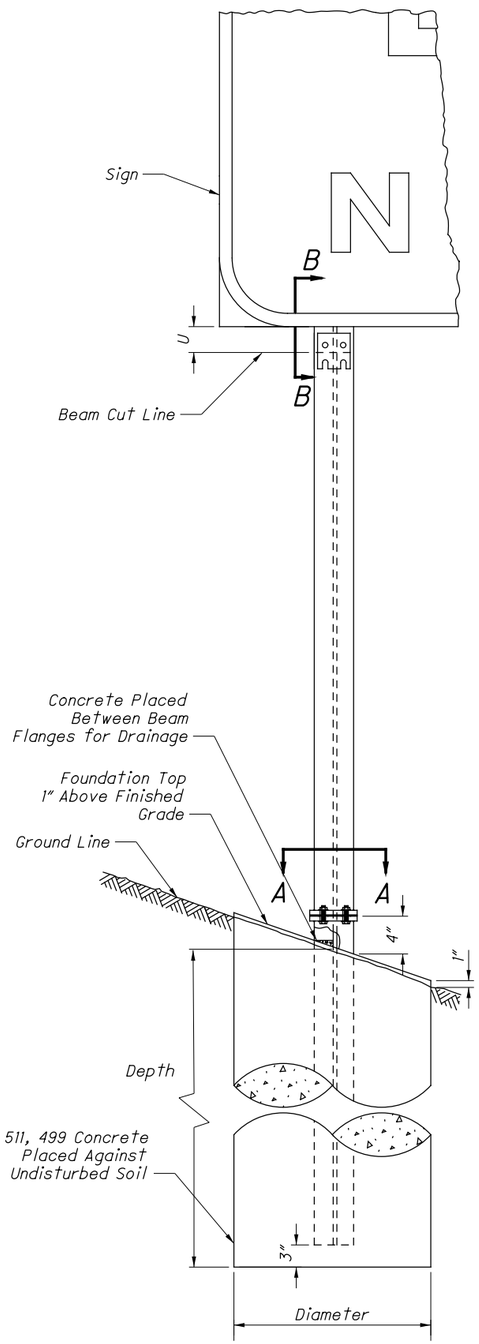

SLIP BASE DESIGN

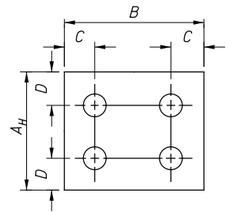

HINGE PLATE
(See Note 5)

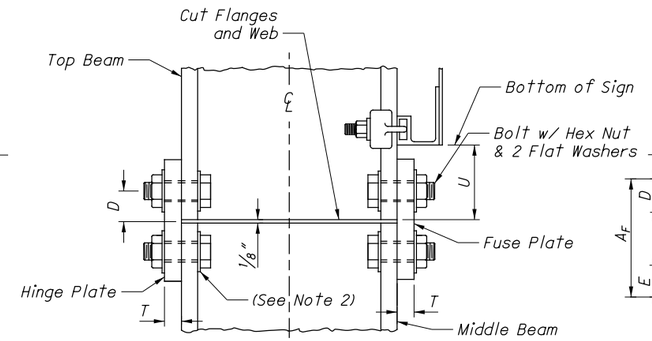

SECTION B - B

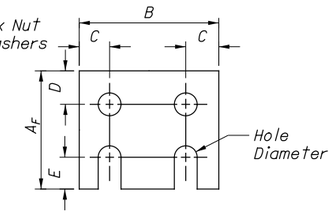

FUSE PLATE

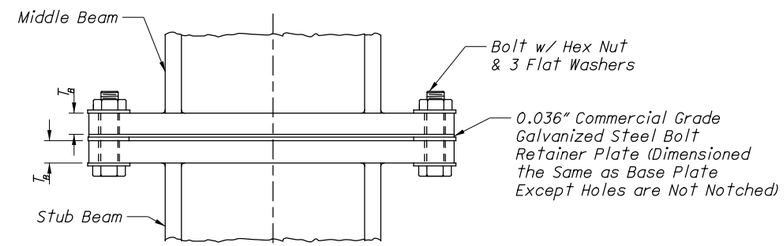

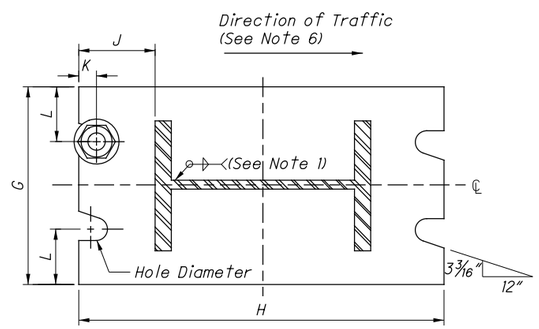

SECTION A - A

NOTES:

1. Base plate weld size shall be equal to the beam flange and web thickness respectively, but no less than 1/4" in either instance.
2. With the S4 x 7.7 beam, use malleable iron beveled washers conforming to ASTM A47 grade 35018.
3. Tighten fuse and hinge plate connections in the shop following a method approved by the Engineer to produce the minimum bolt preload specified.
4. Use the following procedure in assembling the breakaway base plate:

   After all bolts, washers, standard nuts and bolt retainer plates are in place, tighten all standard nuts snugly with a 12" wrench. Loosen each bolt in turn and retighten in a systematic manner to the specified maximum torque. Calibrate wrenches at least once each working day for each bolt diameter being torqued. Burr threads at junction with nut using a center punch.
5. For beams subject to impact from opposite directions, such as in freeway medians, provide fuse plates on both sides.
6. Notches are shown for the installation to the right of traffic. For installations to the left of traffic, fabricate with skewed edge of notches reversed from that shown.
7. Dimensions shown for alternate designs are approximate. Specified dimensions for alternate designs require prequalification. An approved list of suppliers can be provided by ODOT. Payment for alternate designs will be based on the plan quantities for embedded beams.

ALL DIMENSIONS IN INCHES, UNLESS OTHERWISE NOTED

BEAM		HINGE AND FUSE PLATE DIMENSIONS											FOUNDATIONS			BASE PLATE DIMENSIONS								
																DIMENSIONS						HOLE DIA.	BOLT SIZE	MAX. TORQUE (IN/LBS)
TYPE	SIZE	A_H	A_F	B	C	D	E	T	U	HOLE DIA.	BOLT SIZE	MIN. PRELOAD (LB)	DIA. (FT)	DEPTH (FT)	CONCRETE (CU YD/EA)	G	H	J	K	L	T_B			
S4 X 7.7	4 x 2-5/8	4-1/8	3-5/8	2-5/8	9/16	1	1/2	3/16	2-1/2	9/16	1/2	10,000	1.5	4	0.27	4	8	2	1/2	1	3/4	9/16	1/2	200
W6 X 9	5-7/8 x 4	4-1/8	3-5/8	4	7/8	1	1/2	3/16	2-1/2	9/16	1/2	10,000	1.5	5	0.33	5-1/2	10	2-1/16	1/2	1	3/4	9/16	1/2	200
W10 X 12	9-7/8 x 4	6-1/8	5-3/8	4	7/8	1-1/2	3/4	3/16	3-1/2	13/16	3/4	25,000	2.5	6	1.10	8	14-1/2	2-5/16	3/4	1-1/2	3/4	13/16	3/4	750
W8 X 18	8-1/8 x 5-1/4	7-1/8	6-1/4	5-1/4	1-1/4	1-3/4	7/8	1/4	4	15/16	7/8	35,000	2.5	6	1.10	8	14-1/2	3-1/4	3/4	1-1/2	1	13/16	3/4	750
W10 X 22	10-1/8 x 5-3/4	8-1/8	7-1/8	5-3/4	1-1/2	2	1	5/16	4-1/2	1-1/16	1	46,000	2.5	6.75	1.23	8	14-1/2	2-5/16	15/16	2	1	1-1/16	1	1325
W12 X 30	12-3/8 x 6-1/2	8-1/8	7-1/8	6-1/2	1-1/2	2	1	5/16	4-1/2	1-1/16	1	46,000	2.5	8.25	1.50	10	17	2-7/16	15/16	2	1-1/4	1-1/16	1	1325

THIS DRAWING REPLACES TC-41.10 DATED 10-19-2007.

STATE OF OHIO DEPARTMENT OF TRANSPORTATION

Michael Blume — 7-19-2013
ADMINISTRATOR — DATE

STDS. ENGINEER: H. Suter

OFFICE OF ROADWAY ENGINEERING

STANDARD ROADWAY CONSTRUCTION DRAWING

STRUCTURAL BEAM SIGN SUPPORTS

SCD NUMBER: TC-41.10

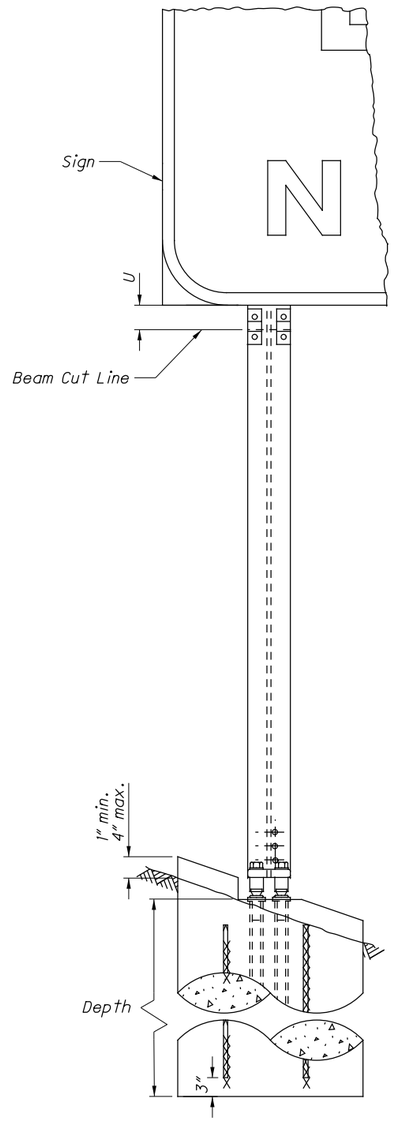

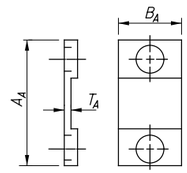

ALTERNATE HINGE AND FUSE PLATES (4 PER BEAM)

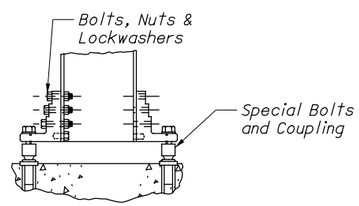

SIDE VIEW

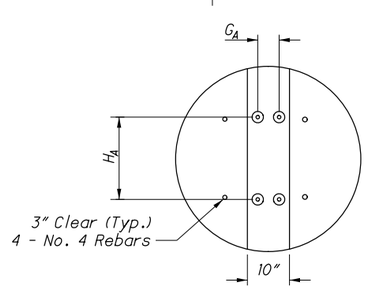

ALTERNATE DESIGN

ALTERNATE DESIGN

(See Note 7)

ALL DIMENSIONS IN INCHES, UNLESS OTHERWISE NOTED

BEAM		HINGE AND FUSE PLATE				FOUNDATIONS			BASE PLATE DIMENSIONS		
TYPE	SIZE	A_A	B_A	BOLT SIZE	T_A	DIA. (FT)	DEPTH (FT)	CONCRETE (CU YD/EA)	G_A	H_A	BOLT SIZE
S4 X 7.7	4 x 2-5/8	3-3/4	1	1/2	0.071	1.5	4	0.27	4-1/4	7-11/16	1/2
W6 X 9	5-7/8 x 4	3-3/4	1	1/2	0.071	1.5	5	0.33	4-1/4	9-9/16	1/2
W10 X 12	9-7/8 x 4	3-3/4	1	1/2	0.071	2.5	6	1.10	4-1/4	13-5/8	1/2
W8 X 18	8-1/8 x 5-1/4	4-3/4	1-1/2	3/4	0.113	2.5	6	1.10	3	16-1/4	1/2
W10 X 22	10-1/8 x 5-3/4	4-3/4	1-1/2	3/4	0.113	2.5	6.75	1.23	4	18-5/16	5/8
W12 X 30	12-3/8 x 6-1/2	4-3/4	1-1/2	3/4	0.113	2.5	8.25	1.50	4	20-7/16	5/8

THIS DRAWING REPLACES TC-41.10 DATED 10-19-2007.

STATE OF OHIO DEPARTMENT OF TRANSPORTATION

Michael Blue 7-19-2013

ADMINISTRATOR DATE

STDS. ENGINEER H. Suter

OFFICE OF ROADWAY ENGINEERING

STANDARD ROADWAY CONSTRUCTION DRAWING

STRUCTURAL BEAM SIGN SUPPORTS

SCD NUMBER TC-41.10

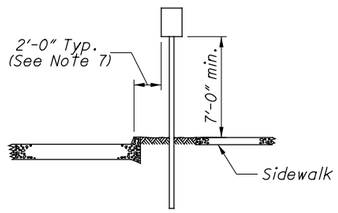

URBAN-RESIDENTIAL AND BUSINESS

AND ALL AREAS WITH SIDEWALKS

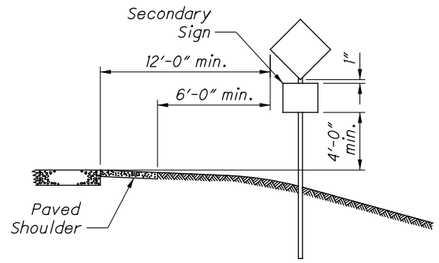

RURAL

WITH SECONDARY SIGN

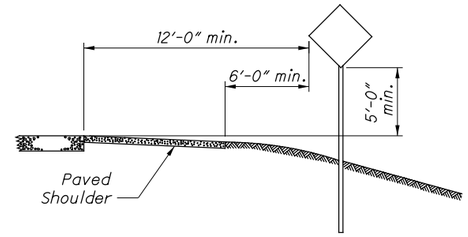

RURAL

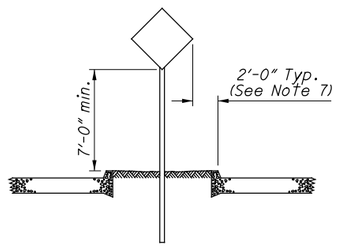

MEDIAN

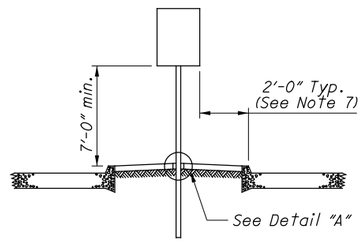

PAVED MEDIAN

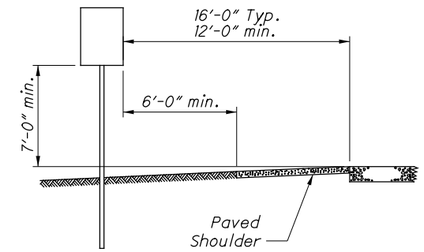

MEDIAN - EXPRESSWAY OR FREEWAY

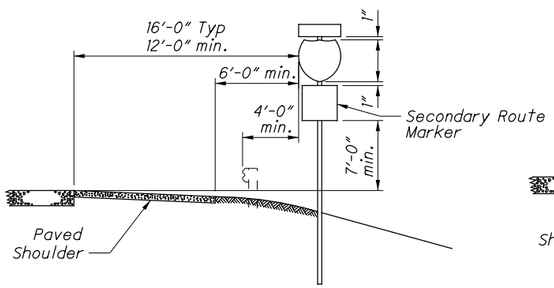

EXPRESSWAY OR FREEWAY

WITH SECONDARY SIGN

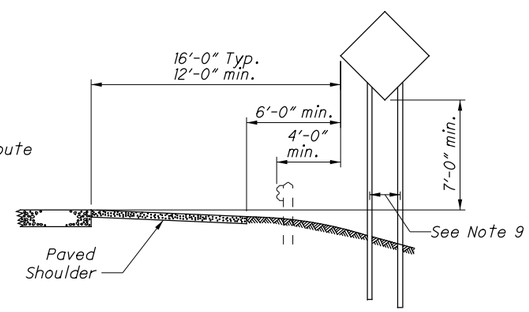

EXPRESSWAY OR FREEWAY

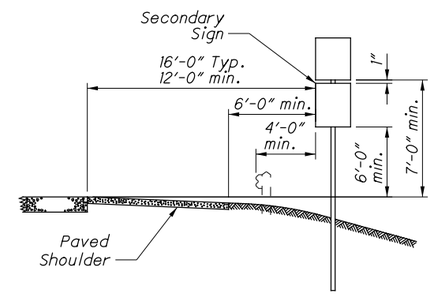

EXPRESSWAY OR FREEWAY

WITH SECONDARY SIGN

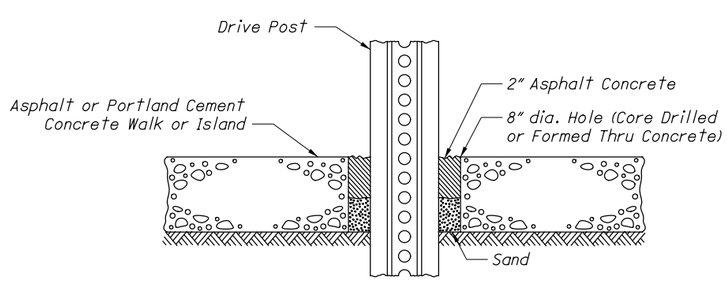

DETAIL "A"

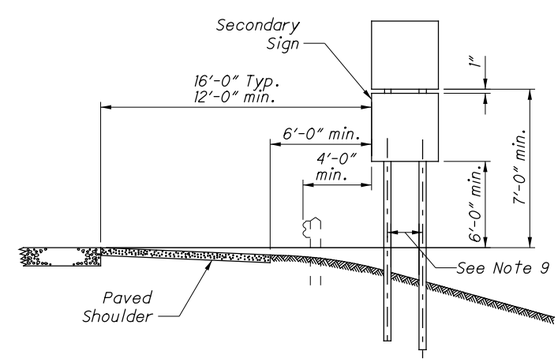

EXPRESSWAY OR FREEWAY

WITH SECONDARY SIGN

NOTES:

1. See Standard Construction Drawing (SCD) TC-41.20 for details on yielding supports.
2. All signs shall be placed 90° to the roadway, except as described in notes 3 and 4 below.
3. Install chevron alignment and one-direction large arrow signs on the outside of a turn or curve in line with and at approximately 90° to approaching traffic flow.
4. Install parking signs with arrows at an angle of not less than 30° nor more than 45° with the line of traffic flow.
5. Install chevron alignment signs at a minimum mounting height of 4' above the near edge of the traveled way.
6. Install object markers at a minimum mounting height of 4' above the near edge of the traveled way for obstructions 8' or less from the edge of shoulder or curb. Install object markers at a minimum mounting height of 4' above the ground for obstructions more than 8' from the edge of the shoulder or curb.
7. Install signs with a minimum lateral offset of 1' from the face of curb where sidewalk width is limited or where existing poles are close to the curb.
8. On conventional roads where it is impractical to locate a sign with the lateral offsets shown, install signs with a minimum lateral offset of 2'.
9. See SCDs TC-52.10 and TC-52.20 for dimensions between supports.

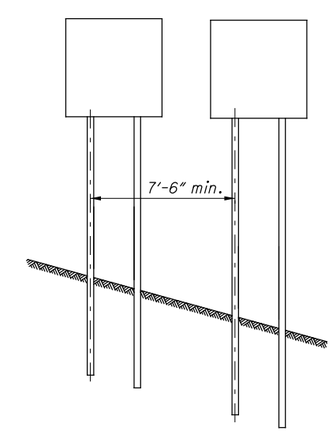

ADJACENT SIGN INSTALLATION

FOR NO. 2 AND NO. 3 YIELDING POST
SUPPORTS IN EXPOSED LOCATIONS

THIS DRAWING REPLACES TC-42.20 DATED 01-21-2011.

STANDARD ROADWAY CONSTRUCTION DRAWING

TYPICAL FLAT SHEET SIGN PLACEMENT

SCD NUMBER TC-42.20

1 / 1

STATE OF OHIO DEPARTMENT OF TRANSPORTATION

ADMINISTRATOR

10-18-2013
DATE

STDS. ENGINEER H. Suter

OFFICE OF ROADWAY ENGINEERING

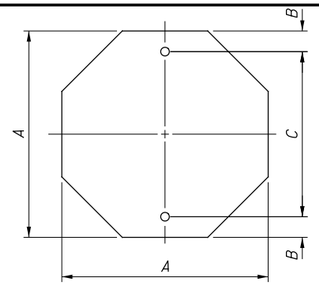

OCTA-1-2

A	B	C	THICKNESS	AREA (FT^2)
18	3	12	0.080	2.25
24	3	18	0.080	4.00
30	3	24	0.080	6.25
36	3	30	0.080	9.00

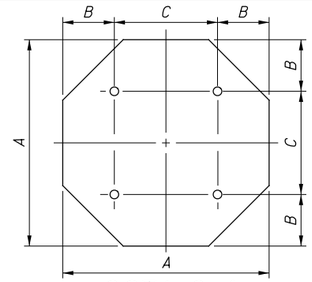

OCTA-2-4

A	B	C	THICKNESS	AREA (FT^2)
48	9	30	0.100	16.00

Shape — No. Bolts Required

OCTA-2-4

No. Supports Required

NOTES:

1. All bolt holes shall be ⅜" in diameter, and may be drilled or punched to finished size.
2. Dimensions between bolt holes shall be to tolerance of ± 1/32".
3. All route shields shall be 0.080" thick and attached to extrusheet signs with aluminum blind rivets.
4. For back-to-back mounting of STOP (R1-1) and DO NOT ENTER (R5-1) sign, follow details shown on Standard Construction Drawing TC-41.50.

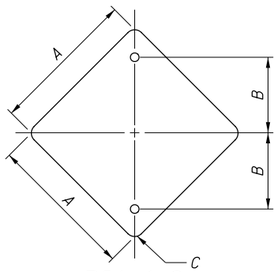

DIA-1-2

A	B	C	THICKNESS	AREA (FT^2)
18	9	1.5	0.080	2.25
24	12	1.5	0.080	4.00
30	15	1.875	0.080	6.25
36	18	2.25	0.080	9.00

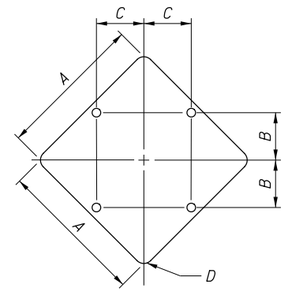

DIA-2-4

A	B	C	D	THICKNESS	AREA (FT^2)
48	15	15	3	0.100	16.00
60	18	18	3.75	0.100	25.00

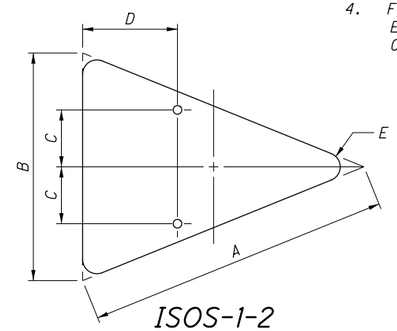

ISOS-1-2

A	B	C	D	E	THICKNESS	AREA (FT^2)
40	30	7.5	12	1.875	0.080	3.86
48	36	9	15	2.25	0.100	5.56

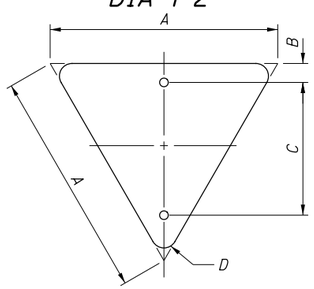

TRI-1-2

A	B	C	D	THICKNESS	AREA (FT^2)
24	2	14	1.5	0.080	1.73
30	3	18	1.5	0.080	2.71
36	3	21	2	0.080	3.90

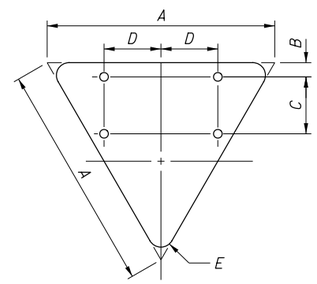

TRI-2-4

A	B	C	D	E	THICKNESS	AREA (FT^2)
48	3	12	12	3	0.100	6.93
60	3	18	15	4	0.100	10.83

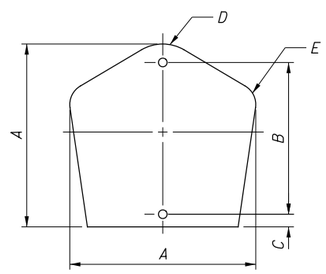

CO-1-2

A	B	C	D	E	THICKNESS	AREA (FT^2)
18	15	1	5	2	0.080	2.25
24	18	2	5.313	2.688	0.080	4.00
30	24	2	6.625	3.375	0.080	6.25

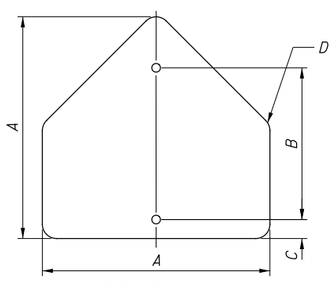

PENT-1-2

A	B	C	D	THICKNESS	AREA (FT^2)
30	21	3	1.875	0.080	6.25
36	24	3	2.25	0.080	9.00

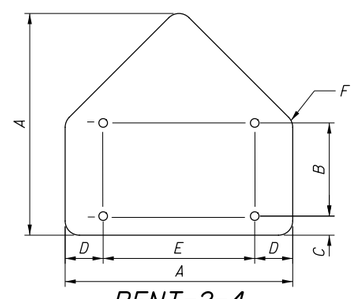

PENT-2-4

A	B	C	D	E	F	THICKNESS	AREA (FT^2)
48	18	6	9	30	3	0.100	16.00

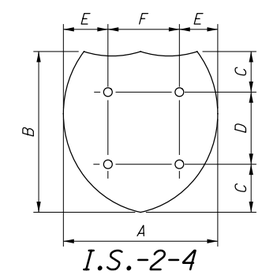

I.S.-2-4

A	B	C	D	E	F	THICKNESS	AREA (FT^2)
48	48	9	30	9	30	0.100	16.00
60	48	9	30	12	36	0.100	20.00

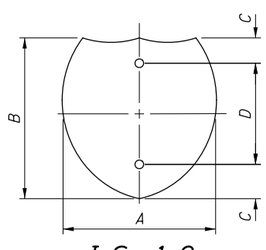

I.S.-1-2

A	B	C	D	THICKNESS	AREA (FT^2)
24	24	3	18	0.080	4.00
24	30	3	18	0.080	5.00
30	30	3	24	0.080	6.25
37.5	30	3	24	0.080	7.81
36	36	6	24	0.080	9.00
45	36	6	24	0.080	11.25

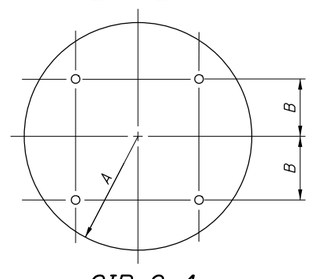

CIR-2-4

A	B	THICKNESS	AREA (FT^2)
24	15	0.100	16.00

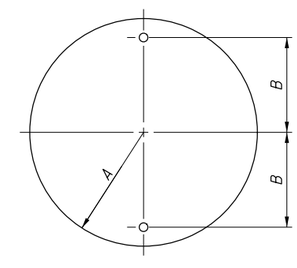

CIR-1-2

A	B	THICKNESS	AREA (FT^2)
9	6	0.080	2.25
12	9	0.080	4.00
15	12	0.080	6.25
18	15	0.080	9.00

THIS DRAWING REPLACES TC-52.10 DATED 01-18-2013.

STATE OF OHIO DEPARTMENT OF TRANSPORTATION

10-18-2013
DATE

ADMINISTRATOR

STDS. ENGINEER H. Suter

OFFICE OF ROADWAY ENGINEERING

STANDARD ROADWAY CONSTRUCTION DRAWING

SIGN BLANK DETAILS I

SCD NUMBER TC-52.10

NOTES:

1. All bolt holes shall be ⅜" in diameter and may be drilled or punched to finished size.
2. Dimensions between bolt holes shall be to tolerance of ± 1/32".
3. For back-to-back mounting of STOP (R1-1) and DO NOT ENTER (R5-1) sign, follow details shown on Standard Construction Drawing TC-41.50.

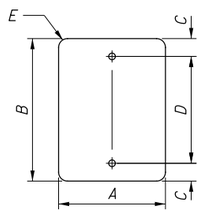

V-REC-1-2

A	B	C	D	E	THICKNESS	AREA (FT^2)
6	54	9	36	1.5	0.080	2.25
9	12	1.5	9	1.5	0.080	0.75
10	12	1.5	10	1.5	0.080	0.83
12	15	1.5	12	1.5	0.080	1.25
12	16	1.5	13	1.5	0.080	1.33
12	18	1.5	15	1.5	0.080	1.50
12	24	3	18	1.5	0.080	2.00
12	30	3	24	1.5	0.080	2.50
12	36	3	30	1.5	0.080	3.00
12	48	6	36	1.5	0.080	4.00
14	48	6	36	1.5	0.080	4.67
18	24	3	18	1.5	0.080	3.00
18	60	6	48	1.5	0.100	7.50
24	30	3	24	1.5	0.080	5.00
24	36	3	30	1.5	0.080	6.00
24	38	3	32	1.5	0.080	6.33
24	42	6	30	1.5	0.080	7.00
24	48	6	36	1.5	0.100	8.00
30	36	3	30	1.875	0.080	7.50
30	42	6	30	1.875	0.080	8.75
30	48	6	36	1.875	0.100	10.00

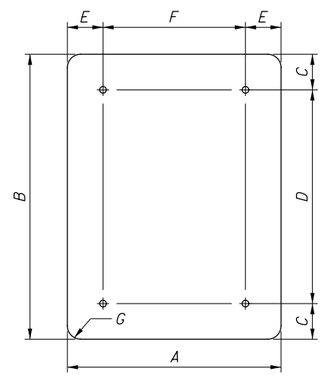

V-REC-2-4

A	B	C	D	E	F	G	THICKNESS	AREA (FT^2)
36	42	6	30	6	24	2.25	0.080	10.50
36	48	6	36	6	24	2.25	0.100	12.00
36	54	6	42	6	24	2.25	0.100	13.50
36	60	6	48	6	24	2.25	0.100	15.00
36	72	12	48	6	24	2.25	0.100	18.00
36	75	13.5	48	6	24	2.25	0.100	18.75
42	60	6	48	9	24	2.25	0.100	17.50
48	60	6	48	9	30	3	0.100	20.00

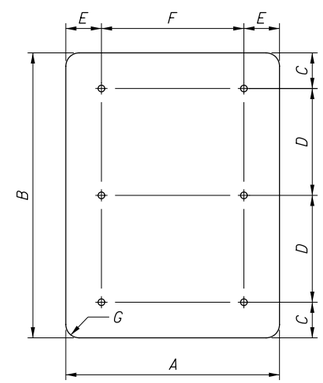

V-REC-2-6

A	B	C	D	E	F	G	THICKNESS	AREA (FT^2)
48	72	6	30	9	30	3	0.100	24.00
48	76	8	30	9	30	3	0.100	25.33
48	84	12	30	9	30	3	0.100	28.00
48	96	12	36	9	30	3	0.100	32.00

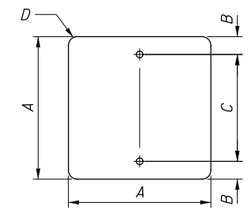

SQ-1-2

A	B	C	D	THICKNESS	AREA (FT^2)
6	1.0	3	1.0	0.080	0.25
9	1.0	6	1.0	0.080	0.56
12	1.5	9	1.5	0.080	1.00
15	1.5	12	1.5	0.080	1.56
16	1.5	13	1.5	0.080	1.78
18	3	12	1.5	0.080	2.25
24	3	18	1.5	0.080	4.00
30	3	24	1.875	0.080	6.25
36	3	30	2.25	0.080	9.00

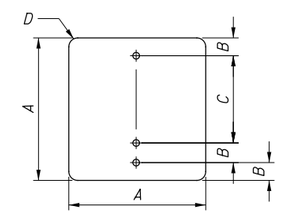

SQ-1-3
(MAINTENANCE MARKER)

A	B	C	D	THICKNESS	AREA (FT^2)
12	1	9	1.5	0.08	1

Shape — No. Bolts Required

V-REC-2-4

No. Supports Required

THIS DRAWING REPLACES TC-52.20 DATED 01-18-2013.

STATE OF OHIO DEPARTMENT OF TRANSPORTATION
ADMINISTRATOR — DATE 01-17-2014

STDS. ENGINEER H. Suter

OFFICE OF ROADWAY ENGINEERING

STANDARD ROADWAY CONSTRUCTION DRAWING

SIGN BLANK DETAILS II

SCD NUMBER TC-52.20

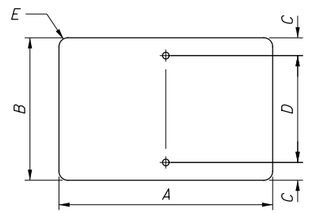

H-REC-1-2

A	B	C	D	E	THICKNESS	AREA (FT ²)
12	4	1	2	1.5	0.080	0.33
12	6	1	3	1.5	0.080	0.50
12	6.5	1	3.5	1.5	0.080	0.54
12	9	1.5	6	1.5	0.080	0.75
15	8	1.5	5	1.5	0.080	0.83
15	12	1.5	9	1.5	0.080	1.25
18	6	1	3	1.5	0.080	0.75
18	9	1.5	6	1.5	0.080	1.12
18	12	1.5	9	1.5	0.080	1.50
20	15	1.5	12	1.5	0.080	2.08
20	18	3	12	1.5	0.080	2.50
21	15	1.5	12	1.5	0.080	2.19
24	6	1	3	1.5	0.080	1.00
24	8	1.5	5	1.5	0.080	1.33
24	9	1.5	6	1.5	0.080	1.50
24	10	1.5	7	1.5	0.080	1.67
24	12	1.5	9	1.5	0.080	2.00
24	18	3	12	1.5	0.080	3.00
30	8	1.5	5	1.5	0.080	1.67
30	9	1.5	6	1.5	0.080	1.88
30	12	1.5	9	1.5	0.080	2.50
30	15	1.5	12	1.5	0.080	3.12
30	16	1.5	13	1.5	0.080	3.33
30	18	3	12	1.5	0.080	3.75
30	24	3	18	1.5	0.080	5.00
36	6	1	3	1.5	0.080	1.50
36	8	1.5	5	1.5	0.080	2.00
36	9	1.5	6	1.5	0.080	2.25
36	12	1.5	9	1.5	0.080	3.00
36	14	1.5	11	1.5	0.080	3.50
36	15	1.5	12	1.5	0.080	3.75
36	18	3	12	1.5	0.080	4.50
36	20	3	14	1.5	0.080	5.00
36	24	3	18	1.5	0.080	6.00
36	30	3	24	1.875	0.080	7.50
37.5	30	3	24	1.875	0.080	7.81
48	8	1.5	5	1.5	0.125	2.67
48	10	1.5	7	1.5	0.125	3.33
48	12	1.5	9	1.5	0.125	4.00
48	14	1.5	11	1.5	0.125	4.67
48	16	1.5	13	1.5	0.125	5.33
48	18	3	12	1.5	0.125	6.00

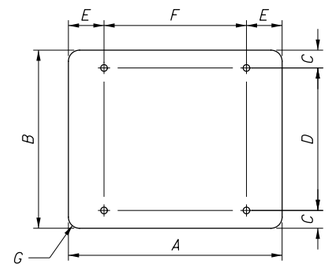

H-REC-2-4

A	B	C	D	E	F	G	THICKNESS	AREA (FT ²)
48	8	1.5	5	9	30	1.5	0.125	2.66
48	10	1.5	7	9	30	1.5	0.125	3.33
48	12	1.5	9	9	30	1.5	0.125	4.00
48	14	1.3	11	9	30	1.5	0.125	4.66
48	16	1.5	13	9	30	1.5	0.125	5.33
48	18	3	12	9	30	1.5	0.125	6.00
40	20	3	14	6	28	1.5	0.080	5.56
42	24	3	18	9	24	1.5	0.080	7.00
42	30	3	24	9	24	1.875	0.080	8.75
42	36	6	24	9	24	2.25	0.080	10.50
45	36	6	24	9	27	2.25	0.080	11.25
48	20	3	14	9	30	1.5	0.100	6.67
48	24	3	18	9	30	1.5	0.100	8.00
48	30	3	24	9	30	1.5	0.100	10.00
48	36	6	24	9	30	1.875	0.100	12.00
48	42	6	30	9	30	2.25	0.100	14.00
54	18	3	12	9	36	2.25	0.100	6.75
54	30	3	24	9	36	1.875	0.100	11.25
54	36	6	24	9	36	2.25	0.100	13.50
60	12	1.5	9	12	36	1.5	0.100	5.00
60	18	3	12	12	36	1.5	0.100	7.50
60	24	3	18	12	36	1.5	0.100	10.00
60	30	3	24	12	36	1.875	0.100	12.50
60	36	6	24	12	36	2.25	0.100	15.00
60	48	6	36	12	36	3	0.100	20.00
66	24	3	18	12	42	1.5	0.100	11.00
66	36	6	24	12	42	2.25	0.100	16.50
72	12	1.5	9	12	48	1.5	0.125	6.00
72	15	1.5	12	12	48	1.5	0.125	7.50
72	24	3	18	12	48	1.5	0.100	12.00
72	36	6	24	12	48	2.25	0.100	18.00
72	48	6	36	12	48	3	0.100	24.00
78	24	3	18	12	54	1.5	0.125	13.00

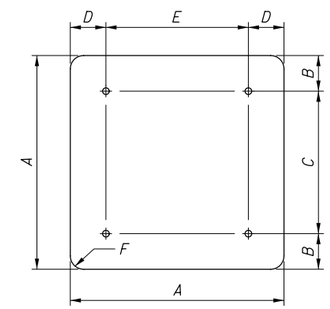

SQ-2-4

A	B	C	D	E	F	THICKNESS	AREA (FT ²)
36	6	24	6	24	2.25	0.080	9.00
42	6	30	9	24	2.25	0.080	12.25
48	6	36	9	30	3	0.100	16.00

Shape — No. Bolts Required

H-REC-2-4

No. Supports Required

NOTES:

1. All bolt holes shall be ⅜" in diameter and may be drilled or punched to finished size.
2. Dimensions between bolt holes shall be to tolerance of ± 1/32".
3. For back-to-back mounting of STOP (R1-1) and DO NOT ENTER (R5-1) sign, follow details shown on Standard Construction Drawing TC-41.50.

THIS DRAWING REPLACES TC-52.20 DATED 01-18-2013.

STATE OF OHIO DEPARTMENT OF TRANSPORTATION
ADMINISTRATOR — DATE 01-17-2014

STDS. ENGINEER H. Suter

OFFICE OF ROADWAY ENGINEERING

STANDARD ROADWAY CONSTRUCTION DRAWING

SIGN BLANK DETAILS II

SCD NUMBER TC-52.20

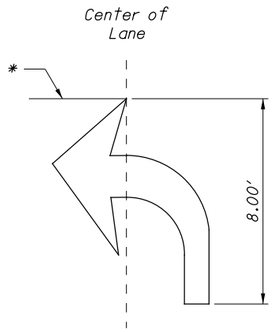

TURN ARROW

(Right Arrow Opposite)

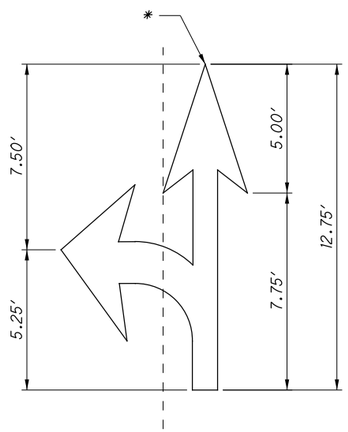

TURN AND THROUGH ARROW

(Three-Headed Directional Arrows Can be Achieved by the Combination of Turn Arrows.)

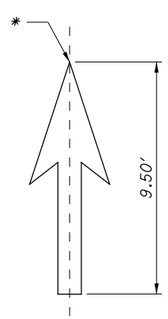

THROUGH ARROW

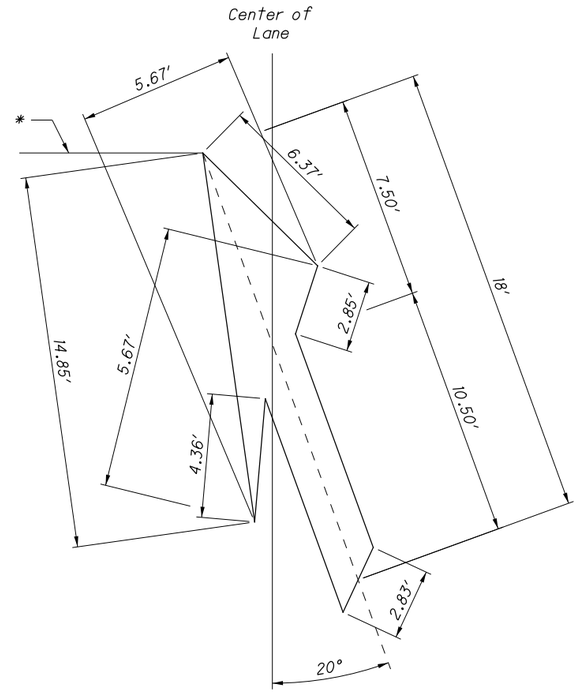

LANE-REDUCTION ARROW

(For Left Lane, Use Mirror Image)

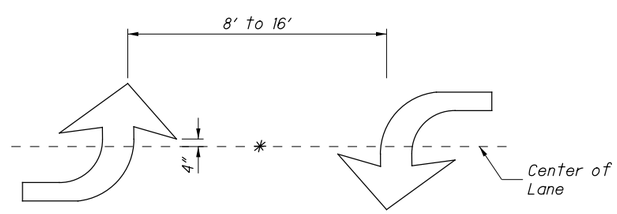

TWO-WAY LEFT-TURN ARROWS

(See Note 6)

TABLE 1 - LANE-USE ARROWS

ARROW TYPE	SIZE (FT)	AREA (SQ FT)
Turn Arrow	8.00	17
Through Arrow	9.50	13
Turn and Through Arrow	12.75	28
Lane-Reduction Arrow	18.00	46

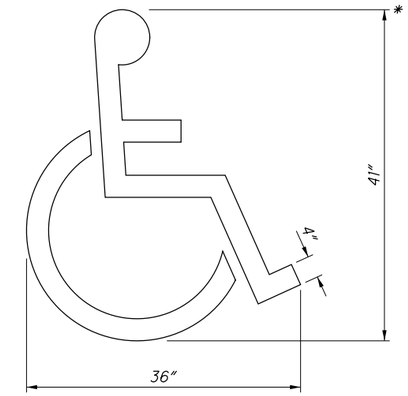

HANDICAP SYMBOL MARKING

TABLE 2 - HANDICAP, BIKE & CHEVRON MARKINGS

SYMBOL	HEIGHT (IN)	WIDTH (IN)	AREA (SQ FT)
HANDICAP	41	36	2.7
BIKE	72	40	16
CHEVRON	40	40	3.3 (.83 x 4)

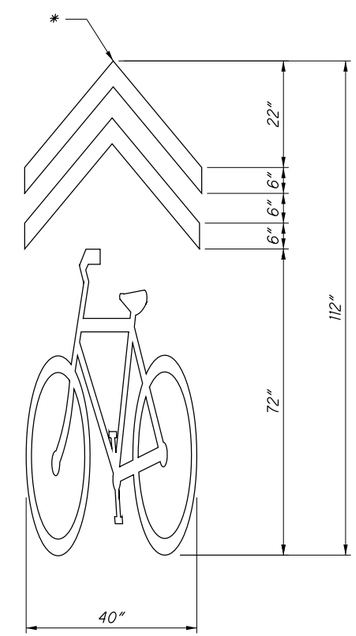

SHARED LANE MARKING

(See Note 7)

* - Indicates Station Reference Point

STATE OF OHIO DEPARTMENT OF TRANSPORTATION
Reynaldo Vásquez 01-17-2014
ADMINISTRATOR DATE

STDS. ENGINEER P. Singh

OFFICE OF ROADWAY ENGINEERING

STANDARD ROADWAY CONSTRUCTION DRAWING

WORD AND SYMBOL PAVEMENT MARKINGS

THIS DRAWING REPLACES TC-71.10 DATED 10-19-2012.

SCD NUMBER TC-71.10

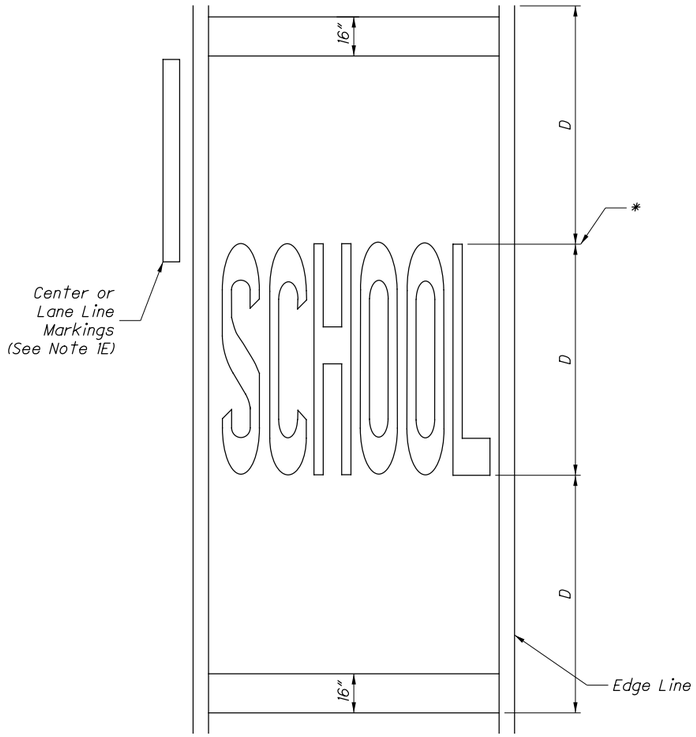

SCHOOL WORD MARKING
(See Note 1)

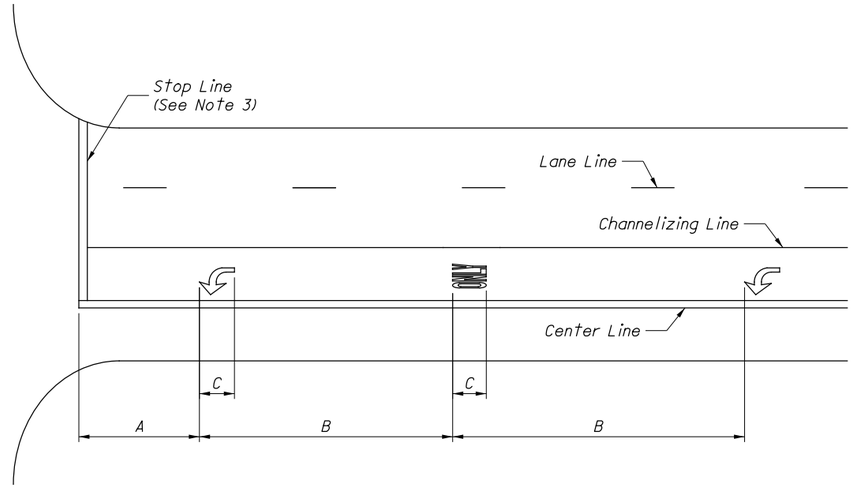

TABLE 4 - LANE USE MARKINGS

ROADWAY TYPE	DIMENSIONS (FT)		
	A (MIN.)	B	C
RURAL	30	88	8
URBAN	10	66	6

(See Note 5)

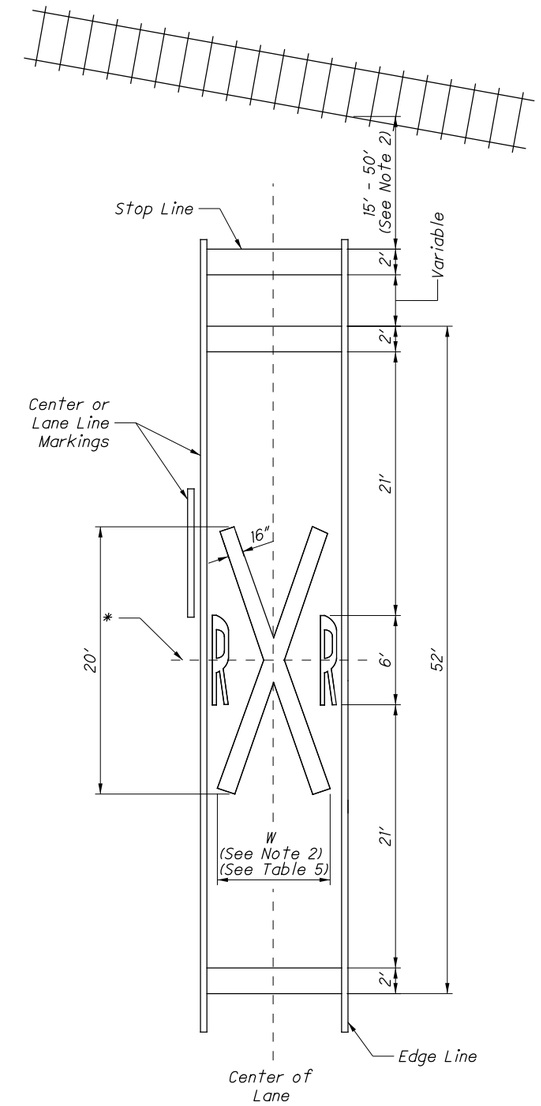

RAILROAD SYMBOL MARKING
(See Note 2)

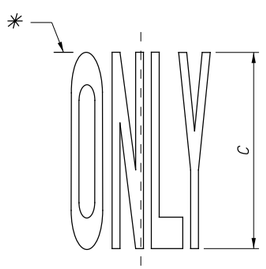

ONLY WORD MARKING
(See Note 4)

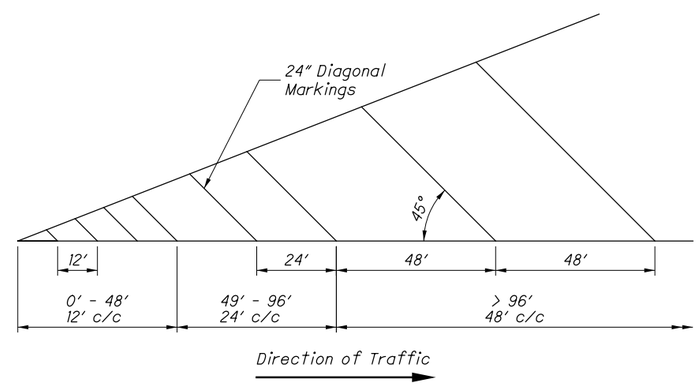

TYPICAL SPACING DETAIL FOR 24" DIAGONAL MARKINGS
(Chevron Markings, Including a Spacing Table, are Shown on SCD TC-72.20.)

TABLE 3 - WORDS (SQ FT)

WORD	HEIGHT (C, D)		
	URBAN 6'	RURAL 8'	MULTI-LANE 10'
ONLY (C)	17	23	N/A
SCHOOL (D)	27	37	90

* - Indicates Station Reference Point

TABLE 5 - R X R SYMBOL

WIDTH (W) (FT)	8	9	10	11	12
AREA (SQ FT)	67	68	70	71	72

THIS DRAWING REPLACES TC-71.10 DATED 10-19-2012.

STATE OF OHIO DEPARTMENT OF TRANSPORTATION
ADMINISTRATOR
01-17-2014
DATE

STDS. ENGINEER P. Singh

OFFICE OF ROADWAY ENGINEERING

STANDARD ROADWAY CONSTRUCTION DRAWING

WORD AND SYMBOL PAVEMENT MARKINGS

SCD NUMBER TC-71.10

NOTES:

SCHOOL Marking

1A. The SCHOOL markings shall be installed on all paved approaches in advance of all School Zones.

1B. The SCHOOL markings should be placed at least 100′ in advance of the School Zone. The preferred placement of the SCHOOL marking is adjacent to the School Zone Advance sign.

1C. On two-way, two-lane highways the following shall apply:

1.) When the approach lane to the School Zone is 11′ or more in width -

a.) The SCHOOL word marking and transverse lines shall be contained in, and centered in, the lane.

b.) The character height shall be 6′ for urban areas and 8′ for rural areas.

2.) When the approach lane to the School Zone is less than 11′ in width -

a.) One installation of the SCHOOL word marking and transverse lines shall extend across both lanes of traffic.
b.) The characters shall be 10′ in height.

1D. On multi-lane approaches the following shall apply -

1.) When the approach lanes to the School Zone are 11′ or more in width -

a.) The SCHOOL word marking and transverse lines shall be contained in, and centered in, each lane.
b.) The character height shall be 6′ for urban areas and 8′ for rural areas.

2.) When the approach lanes to the School Zone are less than 11′ in width -

a.) One installation of the SCHOOL word marking shall extend to the width of two approach lanes.
b.) Transverse lines shall extend across all approach lanes of traffic.
c.) The characters shall be 10′ in height.

1E. Center or lane lines shall not pass through the SCHOOL word marking.

1F. 6′ and 8′ high SCHOOL word marking shall be marked with 4″ strokes.

10′ high SCHOOL word marking shall be marked with 8″ strokes.

1G. The area of the transverse lines varies with the width of the pavement; therefore, the area must be added to the value in Table 3 (sheet 2).

Railroad Crossing Markings

2A. On multi-lane approaches, markings shall be as follows -

a.) The RXR symbol shall be placed in each approach lane.
b.) Transverse lines used with the railroad symbols shall extend across all appraoch lanes.

2B. The railroad symbol should be located so that the Railroad Advance Warning (W10-1) sign is within the two transverse boundary lines of the railroad symbol.

2C. The stop line shall be located for best sight distance between 15′ - 50′ of the near edge of the tracks.

2D. The stop line shall be approximately 8′ from a gate (if present).

2E. Width (W) of the "X" will vary according to the lane width.

2F. The height of the "R" shall be 6′.

2G. The area of the transverse lines and stop lines varies with the width of the pavement; therefore the area must be added to the value in Table 5 (sheet 2).

Stop Line Marking

3A. Except as specified in Notes 3B and 3C, the stop line should be placed as follows:

a.) The stop line should be placed where cross-corner vision is maximum.
b.) In no case shall the stop line be placed more than 30′ or less than 4′ from the nearest edge of the intersecting roadway.
c.) For normal intersections the maximum distance should be 10′.

3B. If a marked crosswalk is present the stop line should be placed 4′ in advance of, and parallel to, the nearest crosswalk line.

3C. For signalized intersections the stop line should be placed at a minimum distance of 40′ from the nearest signal head.

ONLY Word Marking

4A. The ONLY word marking is optional.

4B. Where used, the spacing between ONLY and arrow markings should be based on Table 4 (sheet 2).

4C. When lane-use arrow markings are used and the ONLY marking is not, an additional lane-use arrow should be used in its place to retain the spacing as shown in Table 4 (sheet 2).

Lane-Use Arrow Markings

5A. Lane-use arrow markings are optional except where a through traffic lane(s) approaching an intersection becomes a mandatory turn lane(s).

5B. Where used, the spacing between markings should be based on Table 4 (sheet 2). However, based on the turn lane length, the spacing between the markings may be adjusted.

Two-Way Left-Turn Only (TWLTO) Arrows

6A. Arrow sets should be longitudinally spaced at intervals of:

a.) 500′ - 1000′ for speeds less than or equal to 40 mph,
b.) 1000′ - 1500′ for speeds over 40 mph

6B. In addition, an arrow set should be placed:

a.) 100′ - 200′ from the near edge of an intersecting roadway, or
b.) Inside both ends of TWLTO lanes.

Shared Lane Marking

7A. When chevron markings are used, its area must be added to the value of the bike symbol markings (see Table 2 on sheet 1).

7B. When used, the shared lane marking should be placed immediately after an intersection and spaced at intervals not greater than 250′ thereafter.

THIS DRAWING REPLACES TC-71.10 DATED 10-19-2012.

STATE OF OHIO DEPARTMENT OF TRANSPORTATION
Reynaldo Arangel 01-17-2104
ADMINISTRATOR DATE

STDS. ENGINEER P. Singh

OFFICE OF ROADWAY ENGINEERING

STANDARD ROADWAY CONSTRUCTION DRAWING

WORD AND SYMBOL PAVEMENT MARKINGS

SCD NUMBER TC-71.10

G. SCOPE OF WORK

Construction of approximately 400 feet of new roadway with granite curb, brick sidewalk, parking areas with permeable brick pavers, granite edged planting beds and conduit to accommodate future street lighting, landscaping, storm sewer and water main and construction of approximately 400 feet of AEP duct bank.

IV. OWNER COMPLETED FORMS

A. OWNER EXECUTION CHECKLIST

The following list highlights and serves as a reminder of actions required to execute the Contract with the selected bidder.

Notice of Award

- ☐ Complete the form once bidder selected
- ☐ Mail form to bidder
- ☐ Collect acceptance from bidder

Notice of Award to Surety and Surety's Agent

- ☐ Complete the form once bidder selected
- ☐ Send the bond to legal counsel for double-check of validity
- ☐ Send notice form to Surety and Agent at the addresses listed on the Bond form

Bid Tabulation Sheet

- ☐ If Prevailing Wage applies, ensure that the Bid Tabulation Sheet is completed and in your Project file

Prevailing Wage

- ☐ Check the date of the Determination Letter included with the Contract Documents. If it has expired, issue new prevailing wage rates to the Contractor.

Owner/Contractor Agreement

- ☐ Have the Contractor sign the Agreement
- ☐ Have the Law Director review and sign the Agreement
- ☐ Have the Fiscal officer sign the Agreement
- ☐ Have the CITY OF DUBLIN representative sign the Agreement

Notice of Commencement

- ☐ Complete the Notice of Commencement form and put it in the Project file
- ☐ Must produce it if requested but no filing requirement

Notice to Proceed

- ☐ Issue the Notice to Proceed

Bidder's and Subcontractors' Certificate(s) of Licensure

- ☐ If applicable, Collect from Bidder if not submitted with Bid

B. NOTICE OF AWARD TO BIDDER

Date: _____

PROJECT: JOHN SHIELDS PARKWAY - PHASE 1

The CITY OF DUBLIN (Owner) has considered the Bid submitted by you for the above-described work in response to the Legal Notice dated June 3, 2014.

You are hereby notified that your Bid has been accepted for items in the amount of $.

You are required by the Instructions to Bidders to execute the Contract and furnish the required documents within ten (10) calendar days from the date of this notice to you.

If you fail to execute said Contract within ten (10) days from the date of this notice, Owner may—at its discretion—exercise its rights with respect to your Bid guaranty and be entitled to such other rights as may be granted by Law.

You are required to return an acknowledged copy of this Notice of Award to the Owner.

Dated this _____ day of _____, 2014.

Sincerely,

_____
Paul A. Hammersmith P.E.
Director of Engineering / City Engineer

ACCEPTANCE OF NOTICE

Receipt of the above Notice of Award is hereby acknowledged.

Bidder_____

This _____ day of _____, 2014

By: _____

Title: _____

C. NOTICE OF AWARD TO SURETY AND SURETY'S AGENT

_____ (Surety)

_____ (Address)

_____ (City/State/Zip)

_____ (Surety's Agent)

_____ (Address)

_____ (City/State/Zip)

Date: _____

SENT BY REGULAR U.S. MAIL

RE: NOTICE OF AWARD OF CONTRACT

To Whom It May Concern:

You are notified that your principal, , has been awarded a contract for the CITY OF DUBLIN, JOHN SHIELDS PARKWAY - PHASE 1 project, in the amount of $_____ by the CITY OF DUBLIN, OHIO .

Sincerely,

_____
Paul A. Hammersmith P.E.
Director of Engineering / City Engineer

D. NOTICE TO PROCEED

To:

Date: _____

Project: JOHN SHIELDS PARKWAY - PHASE 1

Owner: CITY OF DUBLIN, OHIO
5200 Emerald Parkway, Dublin, Ohio 43017

You are hereby notified to commence Work in accordance with the City/Contractor Agreement dated , and you are to complete the Work in the time required by the Contract Documents. Within ten (10) days from this Notice to Proceed date, you will begin physical, on-site improvements. You are required to return an acknowledged copy of this Notice to Proceed, to the Owner, indicating Acceptance of this Notice to Proceed.

_____
Paul A. Hammersmith P.E.
Director of Engineering / City Engineer

ACCEPTANCE OF NOTICE TO PROCEED

Receipt of the above NOTICE TO PROCEED is hereby acknowledged by _____, this the day of _____, 2014.

By: _____

Title: _____

E. NOTICE OF COMMENCEMENT OF PUBLIC IMPROVEMENT (O.R.C. §1311.252)

NOTICE IS HEREBY GIVEN OF THE COMMENCEMENT OF A PUBLIC IMPROVEMENT AS FOLLOWS:

1. The public improvement is identified as the CITY OF DUBLIN, JOHN SHIELDS PARKWAY - PHASE 1 project located at west of Riverside Drive and east of Tuller Ridge Road.

2. The public authority and Owner responsible for the public improvement is the CITY OF DUBLIN, OHIO, 5200 Emerald Parkway, Dublin, Ohio 43017 .

3. The principal contractor(s) for the public improvement are as follows:

, .

4. The date the CITY OF DUBLIN first executed a contract with a principal contractor for this public improvement is .

5. The name and address of the representative for the CITY OF DUBLIN upon whom service may be made for the purposes of serving an affidavit pursuant to Section 1311.26 of the Ohio Revised Code is Paul A. Hammersmith P.E., Director of Engineering / City Engineer for the CITY OF DUBLIN, OHIO, 5800 Shier-Rings Road, Dublin, Ohio 43016.

The foregoing instrument was acknowledged before me this _____, day of _____, 20____ by Paul A. Hammersmith P.E., Director of Engineering / City Engineer for the CITY OF DUBLIN, OHIO.

Signature and Seal of person taking acknowledgement:

_____

F. PREVAILING WAGE BID TABULATION SHEET

Please print and complete this form. Keep it with your records until the contract has been awarded. Once the contract has been officially awarded, check mark which company was awarded the contract for the project and send or fax a copy to the Wage and Hour Division at 614-728-8639.

Contracting Public Authority: the CITY OF DUBLIN, OHIO		
Project Name:JOHN SHIELDS PARKWAY - PHASE 1		
Project No.:	Bid Date: June 17, 2014	Estimate: $$1,350,000.00

Contract Description: ☐General ☐HVAC ☐Electrical ☐Plumbing ☐Asbestos ☐Other_____

Awarded to (check)	List of Bidding Contractors	Total Bid Amount

Submitted By

Print Name: Paul A. Hammersmith P.E.	Title: Director of Engineering / City Engineer
Telephone Number: 614-859-1617	Fax: 614-410-4699
Signature:	Date:

V. ADDITIONAL PROJECT FORMS

A. PAYROLL INFORMATION

PROJECT: JOHN SHIELDS PARKWAY - PHASE 1

I, _____ (Name),

_____ (Title) of _____ (Company Name), state the following:

1. That I pay or supervise the payment of the persons employed by _____ (Company Name) on the above-referenced project.

2. That during the payroll period commencing on the _____ day of _____, 2014, and ending on the _____ day of _____, 2014, all persons employed on said project have been paid the full weekly wages earned; that no rebates have been or will be made either directly or indirectly to or on behalf of said _____ (Contractor/Subcontractor) from the full weekly wages earned by such persons; and that no deductions have been made either directly or indirectly from the full wages earned by such persons, other than permissible deductions as defined in Regulations, Part 3 (29 CFR Subtitle A), issued by the Secretary of Labor under the Copeland Act, as amended (48 Stat. 948, 63 Stat. 108, 72 Stat. 967; 76 Stat. 357; 40 U.S.C. 276c), and described below:

_____

_____

_____

3. That any payrolls otherwise under this Agreement for Construction (the "Agreement") required to be submitted for the above period are correct and complete; that the wage rates for laborers or mechanics contained therein are not less than the applicable wage rates contained in the specifications as supplied by the Department of Industrial Relations or any wage determination incorporated into the Agreement; and that the classifications set forth therein for each laborer or mechanic conform with the work he performed.

4. That any apprentices employed in the above period are duly registered in a bona fide apprenticeship program registered with the Ohio Apprenticeship Council.

5. That (check applicable box):

□ a. WHERE FRINGE BENEFITS ARE PAID TO APPROVED PLANS, FUNDS, OR PROGRAMS:

In addition to the basic hourly wage rates paid to each laborer or mechanic listed in the above-referenced payroll, payments of fringe benefits listed in the Agreement have been or will be made to appropriate programs for the benefit of such employees, except as noted in Section 4 below.

□ b. WHERE FRINGE BENEFITS ARE PAID IN CASH:

Each laborer or mechanic listed in the above-referenced payroll has been paid as indicated on the payroll, and amount not less than the sum of the applicable basic hourly wage rate plus the amount of the required fringe benefits as listed in the Agreement, except as noted in Section 4 below.

c. Exceptions:

Exception (Craft):	Explanation:
_____	_____
_____	_____
_____	_____
_____	_____

Remarks:

_____

_____

_____

(Signature)

_____

(Print Name and Title)

The willful falsification of any of the above statements may subject the Contractor or Subcontractor to fines as described in Section 4115.99 of the O.R.C.

B. FINAL AFFIDAVIT OF COMPLIANCE WITH PREVAILING WAGES

PROJECT: JOHN SHIELDS PARKWAY - PHASE 1

STATE OF _____

COUNTY OF _____, SS:

I,_____,(Name of person signing the affidavit) _____ (Title) do hereby certify that the wages paid to all employees of _____ (Company Name) for all hours worked on project the CITY OF DUBLIN JOHN SHIELDS PARKWAY - PHASE 1 Project located at west of Riverside Drive and east of Tuller Ridge Road during the period from _____to_____ are in compliance with the Prevailing Wage requirements of Chapter 4115 of the Ohio Revised Code. I further certify that no rebates or deductions have been or will be made, directly or indirectly, from any wages paid in connection with this project, other than those provided by law.

_____

(Signature of Affiant)

_____

(Print Name)

Sworn to and subscribed in my presence this _____ day of _____, 2014.

_____

Notary Public

The above affidavit must be executed and sworn to by the officer or agent or the Contractor/Subcontractor who supervised the payment of employees, before the CITY OF DUBLIN, OHIO will release the surety and/or make final payment due under the terms of the Agreement.

C. CONTRACTOR'S LIEN WAIVER AND RELEASE AGREEMENT

Project: JOHN SHIELDS PARKWAY - PHASE 1

The undersigned hereby acknowledges receipt of payment from the City for all Work on the Project through the date of its prior Application for Payment. The undersigned acknowledges and agrees that the terms in this Agreement shall have the same meaning as in the Contract Documents for the Project.

In return for said payment, and/or pursuant to certain contractual obligations of the undersigned, the undersigned hereby waives and releases any rights it has or may have through the date of its last Application for Payment to any and all Claims and liens related to the Project, including without limitation: Claims of payment, mechanic's liens, liens against funds, surety bond Claims, and Claims for breach of contract or unjust enrichment. The sole exception to this waiver and release is for any Claims the undersigned has made by properly and timely submitting a Claim as required by the Contract Documents. The undersigned acknowledges and agrees that this wavier and release is intended to be a comprehensive release of all Claims and liens related to the Project, including without limitation all Claims against the City, and the employees, board members, agents and representatives of any of the foregoing persons. The undersigned further certifies that this Agreement covers Claims and liens by all persons with which it did business related to the Project, including without limitation subcontractors and suppliers, through the date of its last Application for Payment. The undersigned represents that all such persons have signed an agreement in the form of this Agreement releasing any and all Claims and liens related to the Project, except for any Claims made by properly and timely submitting a Claim as required by the Contract Documents, a copy of which has been delivered to the City. The undersigned hereby represents and warrants that it has paid any and all welfare, pension, vacation, or other contributions required to be paid on account of the employment by the undersigned of any laborers on the Project.

This Agreement is for the benefit of, and may be relied upon by the City. The undersigned hereby agrees to indemnify, defend and hold harmless each of the foregoing, the Project, work or improvement, and real property from any and all Claims, or liens that are or should have been released in accordance with this Agreement.

Contractor Name:_____

Authorized Signature: _____

Title: _____

The foregoing instrument was acknowledged before me this _____, day of _____, 20____ by _____.

Signature and Seal of person taking acknowledgement:

_____

VI. PLANS/DRAWINGS

Plans and Drawing are available at http://dublinohiousa.gov/bids-and-requests-for-proposals/ when downloading the project documents on line. If you purchase a hard copy of the project documents the plans and drawings will be on the CD included in the Bid Document and 11 X 17 printed copy as well.

Sheets 34 to 44 Landscape Layout and Materials will be posted by Addendum