MUIRFIELD DRIVE / NORTH FORK INDIAN RUN PEDESTRIAN BRIDGES

BRAND ROAD TO MOORS PLACE

13 - 025.2 - CIP

City of Dublin

INDEX

TITLE SHEET 1
TYPICAL SECTIONS 2
GENERAL NOTES 3–4
EROSION CONTROL NOTES AND DETAILS 5
MAINTENANCE OF TRAFFIC NOTES 6
GENERAL SUMMARY 7
PLAN AND PROFILE – NORTHBOUND SHARED–USE PATH 8–9
CROSS SECTIONS – NORTHBOUND SHARED–USE PATH 10–11
PLAN AND PROFILE – SOUTHBOUND SHARED–USE PATH 12–13
CROSS SECTIONS – SOUTHBOUND SHARED–USE PATH 14–15
BRIDGE PLANS – NORTHBOUND PEDESTRIAN BRIDGE 16–23
BRIDGE PLANS – SOUTHBOUND PEDESTRIAN BRIDGE 24–31

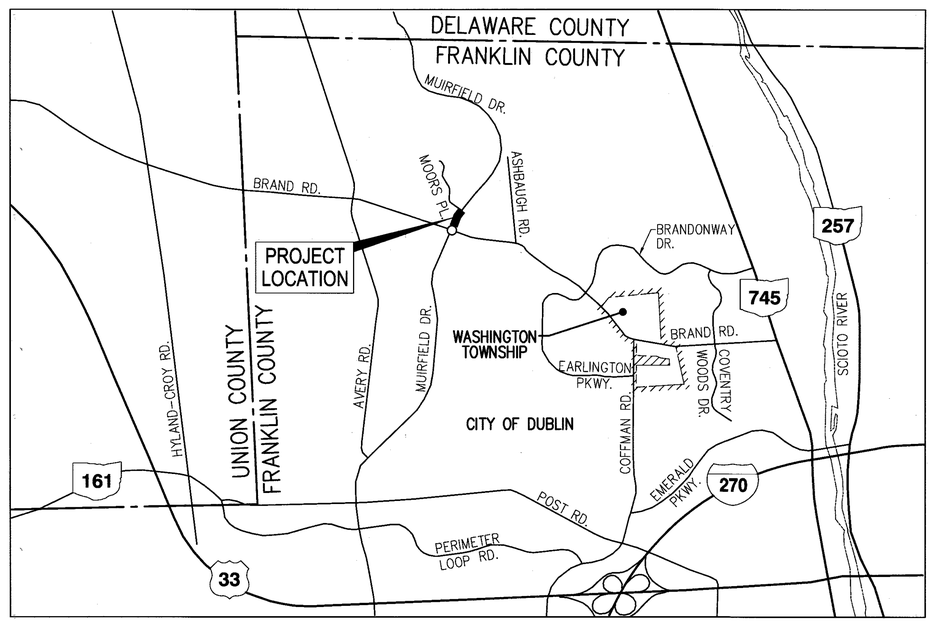

LOCATION MAP

0 1/2 1

SCALE IN MILES

ENGINEERS SEAL

STATE OF OHIO
FONDA GAREY WELKER
69631
REGISTERED PROFESSIONAL ENGINEER

SIGNED: Fonda G. Welker

DATE: MAY 21, 2014

Ohio Utilities Protection Service
Call 811 before you dig

PLAN PREPARED BY:

URS

COLUMBUS, OHIO

URS CORPORATION
TRANSPORTATION DIVISION
277 WEST NATIONWIDE BOULEVARD
COLUMBUS, OH 43215–2566
614–464–4500

THIS PLAN INCLUDES SHEETS FROM BRAND ROAD SHARED–USE PATH 11–022–CIP PREPARED BY:

GPD GROUP
1801 WATERMARK DRIVE, SUITE 150
COLUMBUS, OH 43215
614–210–0751
(SOUTHBOUND SHARED–USE PATH)

AND

RW ARMSTRONG
471 E BROAD STREET, SUITE 2010
COLUMBUS, OH 43215
614–225–8868
(SOUTHBOUND PEDESTRIAN BRIDGE)

STANDARD CONSTRUCTION DRAWINGS

CITY OF DUBLIN	ODOT		CITY OF COLUMBUS	
PD–02	DM–4.4	7–20–12	1441	
PD–03				
PD–04	MT–95.30	7–20–12	AA–S106	
	MT–95.40	7–20–12	AA–S107	
RD–02	MT–97.10	7–20–12	AA–S130	
RD–03	MT–97.11	7–20–12	AA–S149	
RD–05	MT–105.10	7–20–12	AA–S151	
RD–06				
ST–03				

SIGNATURES BELOW SIGNIFY CONCURRENCE WITH THE GENERAL PURPOSES AND GENERAL LOCATION OF THE PROJECT ONLY AND DO NOT CONSTITUTE ASSURANCE TO OPERATE AS INTENDED. ALL TECHNICAL DETAILS REMAIN THE RESPONSIBILITY OF THE PROFESSIONAL CIVIL ENGINEER PREPARING THE PLANS.

APPROVED:

CITY ENGINEER, CITY OF DUBLIN, OHIO

5.28.2014
DATE

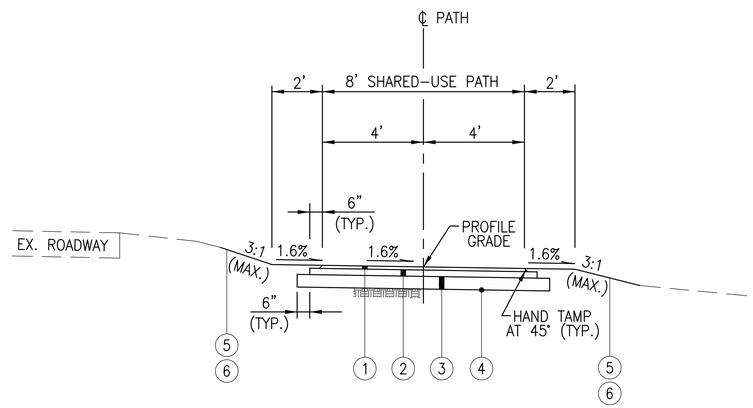

TYPICAL SECTION NORTHBOUND SHARED-USE PATH

STA. 100+01.63 TO STA. 102+54.59
STA. 103+23.76 TO STA. 103+86.56

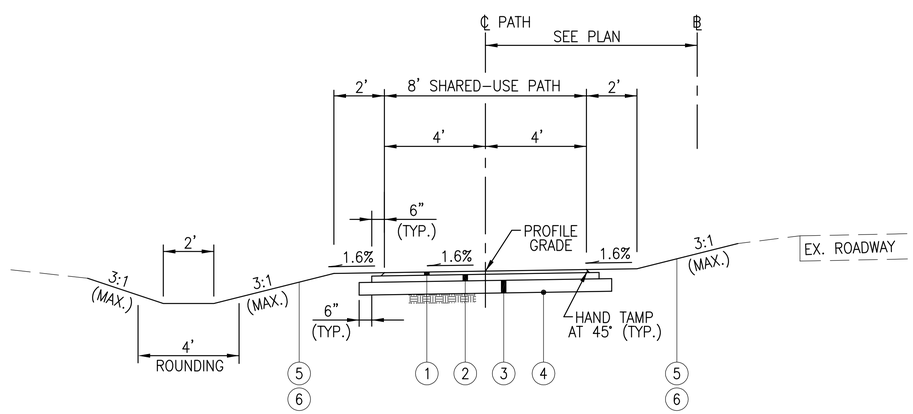

TYPICAL SECTION SOUTHBOUND SHARED-USE PATH

℄ "C" STA. 1+35.00 TO STA. 5+58.51
℄ "C" STA. 6+22.54 TO STA. 6+51.64

CROSS SLOPE TRANSITIONS:
SHARED-USE PATH CROSS SLOPE TRANSITIONS TO BE COMPLETED OVER A 10' LENGTH, CENTERED ABOUT THE STATIONS LISTED ON THE TYPICAL SECTIONS.

LEGEND

1. ITEM 448 - 1 1/2" ASPHALT CONCRETE SURFACE COURSE, TYPE I, PG64-22, MEDIUM TRAFFIC
2. ITEM 301 - 3" ASPHALT CONCRETE BASE, PG64-22
3. ITEM 304 - 6" AGGREGATE BASE
4. ITEM 204 - SUBGRADE COMPACTION
5. ITEM 659 - SEEDING AND MULCHING, AS PER PLAN
6. ITEM 653 - 3" TOPSOIL FURNISHED AND PLACED, AS PER PLAN

CALCULATED LAM
CHECKED FGW

TYPICAL SECTIONS

MUIRFIELD DRIVE / NORTH FORK
INDIAN RUN PEDESTRIAN BRIDGES

GENERAL NOTES

1. THE CITY OF COLUMBUS CONSTRUCTION AND MATERIAL SPECIFICATIONS, CURRENT EDITION, AND ANY SUPPLEMENTS THERETO (HEREAFTER REFERRED TO AS STANDARD SPECIFICATIONS), SHALL GOVERN ALL CONSTRUCTION ITEMS UNLESS OTHERWISE NOTED. THE OHIO DEPARTMENT OF TRANSPORTATION CONSTRUCTION AND MATERIAL SPECIFICATIONS, CURRENT EDITION, SHALL GOVERN THE WORK OF THE ITEM SPECIFICALLY NOTED AS 'ODOT' .

2. THE CITY ENGINEER WILL NOT BE RESPONSIBLE FOR MEANS, METHODS, PROCEDURES, TECHNIQUES, OR SEQUENCES OF CONSTRUCTION THAT ARE NOT SPECIFIED HEREIN. THE CITY ENGINEER WILL NOT BE RESPONSIBLE FOR SAFETY ON THE WORK SITE, OR FOR FAILURE BY THE CONTRACTOR TO PERFORM WORK ACCORDING TO CONTRACT DOCUMENTS.

3. THE CITY SHALL BE RESPONSIBLE TO OBTAIN ALL NECESSARY PERMITS, UNLESS OTHERWISE NOTED.

4. THE CONTRACTOR SHALL NOTIFY THE CITY OF DUBLIN DIVISION OF ENGINEERING IN WRITING AT LEAST 3 WORKING DAYS PRIOR TO BEGINNING CONSTRUCTION.

5. THE CONTRACTOR SHALL BE SOLELY RESPONSIBLE FOR COMPLYING WITH ALL FEDERAL, STATE AND LOCAL SAFETY REQUIREMENTS INCLUDING THE OCCUPATIONAL SAFETY AND HEALTH ACT OF 1970. THE CONTRACTOR SHALL EXERCISE PRECAUTION ALWAYS FOR THE PROTECTION OF PERSONS (INCLUDING EMPLOYEES) AND PROPERTY. IT SHALL ALSO BE THE SOLE RESPONSIBILITY OF THE CONTRACTOR TO INITIATE, MAINTAIN AND SUPERVISE ALL SAFETY REQUIREMENTS, PRECAUTIONS AND PROGRAMS IN CONNECTION WITH THE WORK, INCLUDING THE REQUIREMENTS FOR CONFINED SPACES PER 29 CFR 1910.146.

6. FOLLOWING COMPLETION OF CONSTRUCTION OF THE SITE IMPROVEMENTS AND BEFORE REQUESTING OCCUPANCY, A PROOF SURVEY SHALL BE PROVIDED TO THE DIVISION OF ENGINEERING THAT DOCUMENTS "AS BUILT" ELEVATIONS, DIMENSIONS, SLOPES AND ALIGNMENTS OF ALL ELEMENTS OF THIS PROJECT. THE PROOF SURVEY SHALL BE PREPARED, SIGNED AND SUBMITTED BY THE PROFESSIONAL ENGINEER WHO SEALED THE CONSTRUCTION DRAWINGS.

7. THE CONTRACTOR SHALL RESTRICT CONSTRUCTION ACTIVITY TO PUBLIC RIGHT OF WAY AND AREAS DEFINED AS PERMANENT AND/OR TEMPORARY CONSTRUCTION EASEMENTS, UNLESS OTHERWISE AUTHORIZED BY THE CITY ENGINEER.

8. THE CONTRACTOR SHALL CAREFULLY PRESERVE BENCHMARKS, PROPERTY CORNERS, REFERENCE POINTS, STAKES AND OTHER SURVEY REFERENCE MONUMENTS OR MARKERS. IN CASES OF WILLFUL OR CARELESS DESTRUCTION, THE CONTRACTOR SHALL BE RESPONSIBLE FOR RESTORATIONS. RESETTING OF MARKERS SHALL BE PERFORMED BY AN OHIO PROFESSIONAL SURVEYOR AS APPROVED BY THE CITY ENGINEER.

9. NONRUBBER TIRED VEHICLES SHALL NOT BE MOVED ON OR ACROSS PUBLIC STREETS OR HIGHWAYS WITHOUT THE WRITTEN PERMISSION OF THE CITY ENGINEER.

10. THE CONTRACTOR SHALL RESTORE ALL DISTURBED AREAS TO EQUAL OR BETTER CONDITION THAN EXISTED BEFORE CONSTRUCTION. DRAINAGE DITCHES OR WATERCOURSES THAT ARE DISTURBED BY CONSTRUCTION SHALL BE RESTORED TO THE GRADES AND CROSS SECTIONS THAT EXISTED BEFORE CONSTRUCTION.

11. TRACKING OR SPILLING MUD, DIRT OR DEBRIS UPON STREETS, RESIDENTIAL OR COMMERCIAL DRIVES, SIDEWALKS OR BIKE PATHS IS PROHIBITED ACCORDING TO SECTION 97.38 OF THE DUBLIN CODE OF ORDINANCES. ANY SUCH OCCURRENCE SHALL BE CLEANED UP IMMEDIATELY BY THE CONTRACTOR AT NO COST TO THE CITY. IF THE CONTRACTOR FAILS TO REMOVE SAID MUD, DIRT, DEBRIS, OR SPILLAGE, THE CITY RESERVES THE RIGHT TO REMOVE THESE MATERIALS AND CLEAN AFFECTED AREAS, THE COST OF WHICH SHALL BE THE RESPONSIBILITY OF THE CONTRACTOR.

12. ALL SIGNS, LANDSCAPING, STRUCTURES OR OTHER APPURTENANCES WITHIN RIGHT-OF-WAY DISTURBED OR DAMAGED DURING CONSTRUCTION SHALL BE REPLACED OR REPAIRED TO THE SATISFACTION OF THE CITY ENGINEER. THE COST OF THIS WORK SHALL BE THE RESPONSIBILITY OF THE CONTRACTOR.

13. ALL FIELD TILE BROKEN OR ENCOUNTERED DURING EXCAVATION SHALL BE REPLACED OR REPAIRED AND CONNECTED TO THE PUBLIC STORM SEWER SYSTEM AS DIRECTED BY THE CITY ENGINEER. THE COST OF THIS WORK SHALL BE THE RESPONSIBILITY OF THE CONTRACTOR.

14. ALL PRECAST CONCRETE PRODUCTS SHALL BE INSPECTED AT THE LOCATION OF MANUFACTURE. APPROVED PRECAST CONCRETE PRODUCTS WILL BE STAMPED OR HAVE SUCH IDENTIFICATION NOTING THAT INSPECTION HAS BEEN CONDUCTED BY THE CITY OF COLUMBUS. PRECAST CONCRETE PRODUCTS WITHOUT PROOF OF INSPECTION SHALL NOT BE APPROVED FOR INSTALLATION.

15. BACKFILL WITHIN A 1:1 INFLUENCE LINE OF EXISTING STRUCTURES (HOUSES, DRIVES, GARAGES, ETC.) OR PUBLIC INFRASTRUCTURE (PAVEMENT, CURBS, SIDEWALKS, BIKE PATHS, ETC.) SHALL BE COMPACTED GRANULAR BACKFILL ACCORDING TO ITEM 912 OF THE STANDARD SPECIFICATIONS OR FLOWABLE CDF, TYPE 2 ACCORDING TO ITEM 613. ITEM 911 OF THE STANDARD SPECIFICATIONS SHALL BE USED ELSEWHERE.

16. ALL TRENCHES WITHIN PUBLIC RIGHT-OF-WAY SHALL BE BACKFILLED ACCORDING TO THE APPROVED CONSTRUCTION DRAWINGS OR SECURELY PLATED DURING NONWORKING HOURS. TRENCHES OUTSIDE THESE AREAS SHALL BE BACKFILLED OR SHALL BE PROTECTED BY APPROVED TEMPORARY FENCING OR BARRICADES DURING NON-WORKING HOURS. CLEAN UP SHALL FOLLOW CLOSELY BEHIND THE TRENCHING OPERATION.

17. ALL TREES WITHIN THE CONSTRUCTION AREA NOT SPECIFICALLY DESIGNATED FOR REMOVAL SHALL BE PRESERVED, WHETHER SHOWN OR NOT SHOWN ON THE APPROVED CONSTRUCTION DRAWINGS. TREES TO BE PRESERVED SHALL BE PROTECTED WITH HIGH VISIBILITY FENCING PLACED A MINIMUM 15 FEET FROM THE TREE TRUNK. TREES 6 INCHES OR GREATER AT DBH (DIAMETER BREAST HEIGHT) MUST BE PROTECTED WITH FENCING PLACED AT THE CRITICAL ROOT ZONE OR 15 FEET, WHICHEVER IS GREATER.

18. PAVEMENTS SHALL BE CUT IN NEAT, STRAIGHT LINES THE FULL DEPTH OF THE EXISTING PAVEMENT, OR AS REQUIRED BY THE CITY ENGINEER. PAVEMENT REPLACEMENT SHALL BE CONDUCTED ACCORDING TO CITY OF COLUMBUS STANDARD DRAWING 1441 DR. A AND APPLICABLE CITY OF DUBLIN STANDARD DRAWINGS. THE REPLACEMENT OF DRIVEWAYS, HANDICAPPED RAMPS, SIDEWALKS, BIKE PATHS, PARKING LOT PAVEMENT, ETC. SHALL BE PROVIDED ACCORDING TO THE APPROVED CONSTRUCTION DRAWINGS AND CITY OF DUBLIN STANDARD CONSTRUCTION DRAWINGS.

19. TREE TRIMMING WITHIN THE CONSTRUCTION ZONE IS TO BE COMPLETED BY A CERTIFIED ARBORIST. AT THE COMPLETION OF THE PROJECT, THE ARBORIST IS TO RETURN AND TRIM ANY BROKEN BRANCHES AS NEEDED.

20. ANY MODIFICATION TO THE WORK SHOWN ON DRAWINGS MUST HAVE PRIOR WRITTEN APPROVAL BY THE CITY OF DUBLIN ENGINEER.

21. ALL INLETS SHALL BE CHANNELIZED.

22. TRAFFIC CONTROL AND OTHER REGULATORY SIGNS SHALL BE TYPE S WITH A SQUARE POST ANCHOR BASE INSTALLATION AND MEET ALL REQUIREMENTS OF ODOT TC-41.20 AND APPLICABLE CITY OF DUBLIN SPECIFICATIONS.

23. THE CONTRACTOR INTENDING TO SUBMIT A BID FOR CITY OF DUBLIN (HEREAFTER REFERRED TO AS "CITY") CAPITAL IMPROVEMENT CONTRACTS SHALL BE PREQUALIFIED WITH THE OHIO DEPARTMENT OF TRANSPORTATION IN ACCORDANCE WITH SECTION 102 OF THE ODOT CONSTRUCTION AND MATERIAL SPECIFICATIONS AND CHAPTER 5525 OF THE OHIO REVISED CODE CONCERNING CONSTRUCTION CONTRACTS.

24. ALL ITEMS OF WORK CALLED FOR ON THE PLANS FOR WHICH NO SPECIFIC METHOD OF PAYMENT IS PROVIDED SHALL BE PERFORMED BY THE CONTRACTOR WITH THE COST TO BE INCLUDED IN THE UNIT PRICE BID FOR THE VARIOUS RELATED ITEMS.

25. IT IS THE INTENTION OF THE CONTRACT DOCUMENTS TO PROVIDE AND REQUIRE A COMPLETED PROJECT READY FOR OPERATION. ANY WORK ITEMS OMITTED FROM THE CONTRACT DOCUMENTS WHICH ARE CLEARLY NECESSARY FOR COMPLETION OF THE WORK AND ITS APPURTENANCES SHALL BE CONSIDERED A PART OF SUCH WORK, THOUGH NOT DIRECTLY SPECIFIED OR CALLED FOR IN THE CONTRACT DOCUMENTS. THIS INCLUDES, BUT IS NOT LIMITED TO, SUCH INCIDENTAL ITEMS AS RELOCATION OF MAIL BOXES, SAW CUTTING, AND REMOVAL AND/OR RELOCATION OF SIGNS, SPRINKLERS, OR OTHER MISCELLANEOUS ITEMS.

26. THE COST OF ALL ASPHALT PAVEMENT REMOVAL AND DISPOSAL SHALL BE INCLUDED IN THE PRICE BID PER CUBIC YARD FOR ITEM 203, EXCAVATION. THE COST OF CONCRETE PAVEMENT REMOVAL AND DISPOSAL WILL BE PAID AT THE UNIT PRICE BID PER SQUARE YARD FOR ITEM 202, PAVEMENT REMOVED.

FRANKLIN COUNTY ENGINEER'S MONUMENTATION

THE CONTRACTOR SHALL CONTACT THE FRANKLIN COUNTY ENGINEER'S OFFICE, SURVEY DEPARTMENT AT 614-462-3026 TWO WORKING DAYS BEFORE DISTURBING ANY FRANKLIN COUNTY GEODETIC MONUMENTS (VERTICAL AND/OR HORIZONTAL) FOR REFERENCE AND REPLACEMENT.

CONSTRUCTION NOISE

ANY DEVICE SHALL NOT BE OPERATED AT ANY TIME IN SUCH A MANNER THAT THE NOISE CREATED SUBSTANTIALLY EXCEEDS THE NOISE CUSTOMARILY AND NECESSARILY ATTENDANT TO THE REASONABLE AND EFFICIENT PERFORMANCE OF SUCH EQUIPMENT. THE CONTRACTOR'S CONSTRUCTION ACTIVITIES SHALL BE CONDUCTED SO AS TO ELIMINATE ALL UNNECESSARY NOISE, DUST, AND ODORS. THE USE OF OIL OR OTHER MATERIAL FOR DUST CONTROL, WHICH MAY CAUSE TRACKING, IS NOT PERMITTED.

WORK LIMITS

THE WORK LIMITS SHOWN ON THESE PLANS ARE FOR PHYSICAL CONSTRUCTION ONLY. THE INSTALLATION AND OPERATION OF ALL TEMPORARY TRAFFIC CONTROL AND TEMPORARY TRAFFIC CONTROL DEVICES REQUIRED BY THESE PLANS SHALL BE PROVIDED BY THE CONTRACTOR WHETHER INSIDE OR OUTSIDE THE WORK LIMITS.

CONTINGENCY QUANTITIES

THE CONTRACTOR SHALL NEITHER ORDER MATERIALS NOR PERFORM WORK FOR ITEMS DESIGNATED BY PLAN NOTE TO BE USED "AS DIRECTED BY THE CITY ENGINEER" UNLESS AUTHORIZED BY THE CITY ENGINEER.

ITEM 653 - TOPSOIL FURNISHED AND PLACED, AS PER PLAN

THE REQUIREMENTS OF THE CITY OF COLUMBUS CMS FOR ITEM 653 SHALL BE REQUIRED EXCEPT AS HEREIN NOTED.

A MINIMUM OF 3 INCHES OF TOPSOIL SHALL BE PLACED IN ALL AREAS TO BE SEEDED. PRIOR TO PLACING TOPSOIL IN CUT AREAS, THE EARTH SHALL BE EXCAVATED TO A DEPTH SUFFICIENT TO PLACE 3 INCHES OF TOPSOIL. THE COST OF EXCAVATION AND DISPOSAL OF SURPLUS MATERIALS WILL NOT BE PAID FOR SEPARATELY, BUT SHALL BE INCLUDED IN THE COST OF THE VARIOUS CONTRACT ITEMS.

TOPSOIL SHALL BE REMOVED AND WASTED OR UTILIZED IN NON-LOAD BEARING FILLS IN ACCORDANCE WITH THE SPECIFICATIONS. NO EXTRA COMPENSATION SHALL BE PAID FOR THE REMOVAL OF EXCESS TOPSOIL AS REQUIRED TO OBTAIN A SUITABLE SUBGRADE. PAYMENT FOR TOPSOIL REMOVAL IS INCLUDED IN ITEM 203, EXCAVATION.

ALL TOPSOIL MATERIALS AND FINAL AREA OF SUBGRADE PREPARATION SHALL BE FREE FROM ROCK AND OTHER FOREIGN MATERIAL ½" OR GREATER IN ANY DIMENSION.

SUBGRADE

ALL SOIL SUBGRADES SHALL BE PREPARED AND COMPACTED IN ACCORDANCE WITH ITEM 204 TO A DEPTH OF 12-INCHES BELOW THE SUBGRADE SURFACE. SUBGRADE SHALL BE SCARIFIED AND CONTAIN SUFFICIENT MOISTURE TO MEET ITEM 204 COMPACTION REQUIREMENTS.

SUBGRADE COMPACTION SHALL ALSO BE REQUIRED UNDER SIDEWALKS, BIKE PATHS, AND BRICK PAVER AREAS AND SHALL FOLLOW THE REQUIREMENTS FOR COMPACTION UNDER DRIVEWAYS AS DESCRIBED IN SECTION 204.03. THE COST SHALL BE INCLUDED IN THE UNIT PRICE BID FOR ITEM 204, SUBGRADE COMPACTION.

THE CONTRACTOR SHALL DEFINE THE LIMITS OF ANY WEAK SOILS ENCOUNTERED BY PROOF ROLLING. WHERE SOFT SUBGRADE IS ENCOUNTERED IN CUTS, DUE TO NO FAULT OF THE CONTRACTOR, AND SATISFACTORY COMPACTION CANNOT BE OBTAINED, THE UNSUITABLE MATERIAL SHALL BE REMOVED AND REPLACED PER SECTION 204.04. THE FOLLOWING QUANTITIES HAVE BEEN INCLUDED AS AN ALLOWANCE FOR BIDDING PURPOSES.

ITEM 204 EXCAVATION OF SUBGRADE 30 C.Y.
ITEM 204 GRANULAR EMBANKMENT, NO. 2 STONE 30 C.Y.

AMERICANS WITH DISABILITIES ACT (ADA)

ALL SIDEWALKS, PEDESTRIAN PATHS, CURB RAMPS, AND DRIVEWAYS SHALL BE CONSTRUCTED IN ACCORDANCE WITH THE LATEST STANDARDS OF THE AMERICANS WITH DISABILITIES ACT ACCESSIBILITY GUIDELINES FOR BUILDINGS AND FACILITIES (ADAGG).

THE ELEVATIONS AND SLOPES PROVIDED ON THE DRAWINGS ARE INTENDED TO CONVEY A DESIGN THAT IS COMPATIBLE WITH ADA GUIDELINES. THE CONTRACTOR SHALL DETERMINE THE EXISTING ELEVATIONS OF ADJACENT NEW OR EXISTING CONCRETE CURB AND ADJACENT NEW OR EXISTING WALK PRIOR TO THE START OF RAMP CONSTRUCTION. ADJUSTMENTS IN GRADE SHALL BE MADE BY THE CONTRACTOR BASED ON THE ELEVATION INFORMATION TO INSURE THAT THE FINISHED WORK IS IN ACCORDANCE WITH ADA GUIDELINES.

ALL DETECTABLE WARNINGS SHALL BE ADA SOLUTIONS TACTILE WARNING SURFACE MATS REPLACEABLE WET-SET COMPOSITE TACTILE WITH A DOME SPACING OF 2.35 INCHES, MANUFACTURER PART NUMBER 2448REP. BRICK RED COLOR SHALL BE USED IN MOST LOCATIONS UNLESS OTHERWISE NOTED. THE COST OF THIS WORK WILL BE PAID AT THE UNIT PRICE BID PER EACH, AND SHALL BE IN ADDITION TO ANY OVERLAPPING PAYMENTS PER SQUARE FOOT FOR SIDEWALK OR PEDESTRIAN PATH.

UTILITIES

1. THE FOLLOWING UTILITIES ARE KNOWN TO BE LOCATED WITHIN THE LIMITS OF THIS PROJECT:

AMERICAN ELECTRIC POWER
ELECTRIC & STREET LIGHTING
850 TECH CENTER DRIVE
GAHANNA, OHIO 43230
PAUL PAXTON
PHONE 614-883-6831
FAX 614-883-6868
CELL 614-949-8883
PTPAXTON@AEP.COM

AT&T (CONDUIT)
111 NORTH 4" STREET
ROOM 802
COLUMBUS, OHIO 43215
GARY VAN ALMSICK
PHONE 614-223-7276
GV2758@ATT.COM

COLUMBIA GAS OF OHIO
1600 DUBLIN ROAD
COLUMBUS, OHIO 43215
ROB CALDWELL
PHONE 614-481-1057
CELL 614-370-1906
RCALDWELL@NISOURCE.COM

CITY OF DUBLIN
WATER, STORM, SANITARY, LIGHTING
5800 SHIER RINGS ROAD
DUBLIN, OH 43016
KEN RICHARDSON, PE, PS
PHONE 614-410-4631
KRICHARDSON@DUBLIN.OH.US

TIME WARNER COMMUNICATIONS
3760 INTERCHANGE ROAD
COLUMBUS, OHIO 43204
RAY MAURER
PHONE 614-481-5262
FAX 614-255-6428
PAGER 614-640-6915
CELL 614-348-2979
RAY.MAURER@TWCABLE.COM

TW TELECOM INC.
250 WEST OLD WILSON BRIDGE RD.
SUITE 130
WORTHINGTON, OHIO 43085
MARK BLACKBURN
PHONE 614-255-2148
MARK.BLACKBURN@TWTELECOM.COM

WIDE OPEN WEST
3675 CORPORATE DRIVE
COLUMBUS, OH 43231
ROBERT CARPENTER
PHONE 614-948-4665
CELL 614-937-4313
R_CARPENTER20@WIDEOPENWEST.COM

2. THE CONTRACTOR SHALL GIVE NOTICE OF INTENT TO CONSTRUCT TO OHIO UTILITIES PROTECTION SERVICE (TELEPHONE NUMBER 811), AND TO OWNERS OF UNDERGROUND UTILITIES THAT ARE NOT MEMBERS OF A REGISTERED UNDERGROUND PROTECTION SERVICE. NOTICE SHALL BE GIVEN AT LEAST 2 WORKING DAYS BEFORE START OF CONSTRUCTION.

3. THE IDENTITY AND LOCATIONS OF EXISTING UNDERGROUND UTILITIES IN THE CONSTRUCTION AREA HAVE BEEN SHOWN ON THE APPROVED CONSTRUCTION DRAWINGS AS ACCURATELY AS PROVIDED BY THE OWNER OF THE UNDERGROUND UTILITY. THE CITY OF DUBLIN AND THE CITY ENGINEER ASSUMES NO RESPONSIBILITY FOR THE ACCURACY OR DEPTHS OF UNDERGROUND FACILITIES SHOWN ON THE APPROVED CONSTRUCTION DRAWINGS. IF DAMAGE IS CAUSED, THE CONTRACTOR SHALL BE RESPONSIBLE FOR REPAIR OF THE SAME AND FOR ANY RESULTING CONTINGENT DAMAGE.

4. LOCATION, SUPPORT, PROTECTION AND RESTORATION OF ALL EXISTING UTILITIES AND APPURTENANCES, WHETHER SHOWN OR NOT SHOWN ON THE APPROVED CONSTRUCTION DRAWINGS, SHALL BE THE RESPONSIBILITY OF THE CONTRACTOR.

5. WHEN UNKNOWN OR INCORRECTLY LOCATED UNDERGROUND UTILITIES ARE ENCOUNTERED DURING CONSTRUCTION, THE CONTRACTOR SHALL IMMEDIATELY NOTIFY THE UTILITY OWNER AND THE CITY ENGINEER.

6. PUBLIC STREET LIGHTING MAY BE IN THE VICINITY OF THIS PROJECT. CONTACT THE CITY OF DUBLIN, DIVISION OF ENGINEERING AT 410-4637, TWO DAYS PRIOR TO BEGINNING WORK.USE OF FIRE HYDRANTS

THE CONTRACTOR SHALL MAKE PROPER ARRANGEMENTS WITH THE DUBLIN SERVICE DEPARTMENT AND THE COLUMBUS DIVISION OF WATER FOR THE USE OF FIRE HYDRANTS WHEN USED FOR WORK PERFORMED UNDER THIS CONTRACT AND PROVIDE THE CITY OF DUBLIN A COPY OF THE HYDRANT USAGE PERMIT OBTAINED FROM THE CITY OF COLUMBUS. THE CONTRACTOR SHALL ALSO SEND COPIES OF PERMITS OBTAINED FROM DUBLIN AND COLUMBUS TO THE WASHINGTON AND/OR PERRY TOWNSHIP FIRE DEPARTMENT. PERMITS SHALL BE KEPT AT THE CONSTRUCTION SITE AT ALL TIMES.

ITEM SPECIAL EXPANSION MATERIAL

THE REQUIREMENTS OF THE CITY OF COLUMBUS CMS SHALL BE REQUIRED EXCEPT AS HEREIN NOTED.

FULL DEPTH EXPANSION MATERIAL ONE HALF (1/2) INCHES THICK CONFORMING TO ASTM D 1752, TYPE 1 (RECYCLED RUBBER EXPANSION MATERIAL) SHALL BE UTILIZED WHERE NEW WORK MEETS EXISTING CURBS OR STRUCTURES. FIBROUS TYPE EXPANSION MATERIAL IS NOT TO BE USED.

THIS MATERIAL WILL BE USED BETWEEN THE CURB RAMP AND CURB AND GUTTER. COST IS TO BE INCLUDED IN THE UNIT PRICES BID FOR THE CONCRETE CURB AND RAMP ITEMS.

ITEM 659 - SEEDING AND MULCHING, AS PER PLAN

THE REQUIREMENTS OF THE CITY OF COLUMBUS CMS FOR ITEM 659 SHALL BE REQUIRED EXCEPT AS HEREIN NOTED.

SEED - CERTIFICATION OF GRASS SEED SHALL BE PROVIDED BY SEED VENDOR FOR EACH GRASS-SEED MIXTURE STATING THE BOTANICAL AND COMMON NAME, PERCENTAGE BY WEIGHT OF EACH SPECIES AND VARIETY; AND PERCENTAGE OF PURITY, GERMINATION, AND WEED SEED. INCLUDE THE YEAR OF PRODUCTION AND DATE OF PACKAGING. FURNISH NATIONAL TURFGRASS EVALUATION PROGRAM (NTEP) DATA FOR EACH SPECIES TO BE USED.

GRASS SEED MUST BE FRESH, CLEAN, DRY, NEW-CROP SEED COMPLYING WITH THE A.O.S.A. "JOURNAL OF SEED TECHNOLOGY" RULES FOR TESTING SEEDS FOR PURITY AND GERMINATION TOLERANCES.

SEED SPECIES SHALL BE AS FOLLOWS, WITH NOT LESS THAN 90 PERCENT GERMINATION, NOT LESS THAN 98 PERCENT PURE SEED, AND NOT MORE THAN 0.5 PERCENT WEED SEED.

TURFGRASS SEED MIX PROPORTIONED BY WEIGHT:
A.80 PERCENT TALL FESCUE (FESTUCA ARUNDINACEA), WITH A MINIMUM OF 3 IMPROVED TURF-TYPE VARIETIES. KENTUCKY-31 AND ALTA VARIETIES ARE NOT APPROVED.
B.20 PERCENT PERENNIAL RYEGRASS (LOLIUM PERENNE).

SEEDING - SOW SEED AT A TOTAL RATE OF 7-9 LB. / 1,000 SF WITH A SPREADER OR SEEDING MACHINE. RAKE SEED LIGHTLY INTO TOP 1/8 INCH OF SOIL, ROLL LIGHTLY, AND WATER WITH FINE SPRAY. THOROUGHLY COVER WITH STRAW AND NETTING. NETTING SHALL BE ADEQUATELY PINNED TO PREVENT THE STRAW FROM BEING BLOWN OR WASHED AWAY.

PROTECT SEEDED AREAS WITH SLOPES EXCEEDING 3:1 WITH EROSION CONTROL BLANKETS AS DIRECTED BY THE ENGINEER. COST OF EROSION CONTROL BLANKETS, MATERIAL, AND LABOR SHALL BE PAID FOR BY THE CITY.

HYDRO-SEEDING & HYDRO-MULCHING ARE NOT PERMITTED.

TURF MAINTENANCE - MAINTAIN AND ESTABLISH TURF BY WATERING, FERTILIZING, WEEDING, MOWING, TRIMMING, AND REPLANTING TO ESTABLISH HEALTHY, VIABLE TURF. ROLL, REGRADE, AND REPLANT BARE OR ERODED AREAS AND REMULCH TO PRODUCE A UNIFORMLY SMOOTH TURF. PROVIDE THE SAME MATERIALS AND INSTALLATION AS THOSE USED IN THE ORIGINAL INSTALLATION.

WATER TURF WITH FINE SPRAY AT A MINIMUM RATE OF 1 INCH PER WEEK UNLESS RAINFALL PRECIPITATION IS ADEQUATE.

MOW TURFGRASS SEED MIX AREAS AS SOON AS TOP GROWTH IS TALL ENOUGH TO CUT. REPEAT MOWING TO MAINTAIN SPECIFIED HEIGHT WITHOUT CUTTING MORE THAN 1/3 OF GRASS HEIGHT. MOW AREAS TO A HEIGHT OF 2 TO 3 INC

ITEM SPECIAL – ADS N-12 FLARED END SECTION WITH DISSIMILAR COUPLER

THE REQUIREMENTS OF THE CITY OF COLUMBUS CMS SHALL BE REQUIRED EXCEPT AS HEREIN NOTED.

HDPE FLARED ENDS CALLED FOR IN THE PLANS SHALL BE ADVANCED DRAINAGE SYSTEMS (ADS) "FLARED END SECTIONS", OR APPROVED EQUAL, WITH PE THREADED RODS AND WING NUTS. N-12 ADAPTER FITTINGS FOR CONNECTION TO CONCRETE PIPE SHALL BE INCLUDED IN THE PER EACH PRICE BID FOR THE FLARED END SECTIONS.

608 COMBINATION CONCRETE CURB AND GUTTER, AS PER PLAN

THE REQUIREMENTS OF THE CITY OF COLUMBUS CMS FOR ITEM 608 SHALL BE REQUIRED EXCEPT AS HEREIN NOTED.

CONSTRUCT CONCRETE CURB AND GUTTER PER CITY OF DUBLIN STANDARD DRAWING RD-02 AND COLUMBUS SPECIFICATION 608. COST OF ALL ITEMS SHOWN IN RD-02, INCLUDING THE 4" SUB-DRAIN, SHALL BE INCLUDED IN THE UNIT PRICE BID FOR ITEM 608, COMBINATION CONCRETE CURB AND GUTTER, AS PER PLAN.

ITEM 604 – MANHOLES, CATCH BASINS AND INLETS, AS PER PLAN

THE REQUIREMENTS OF THE CITY OF COLUMBUS CMS FOR ITEM 604 SHALL BE REQUIRED EXCEPT AS HEREIN NOTED.

THE CONTRACTOR SHALL MAKE ALL FINAL GRADE ADJUSTMENT OF MANHOLE, CATCH BASIN AND INLET COVERS AND FRAME ASSEMBLIES USING INJECTION MOLDED HIGH DENSITY POLYETHYLENE (HDPE) ADJUSTMENT RINGS WHERE PRACTICAL. THESE ADJUSTMENT RINGS SHALL BE MANUFACTURED FROM POLYETHYLENE PLASTIC AS IDENTIFIED IN ASTM DESIGNATION D-1248 (STANDARD SPECIFICATION FOR POLYETHYLENE PLASTIC MOLDING AND EXTRUSION MATERIALS). INSTALLATION SHALL BE PER MANUFACTURES'S RECOMMENDATIONS ONLY. THE ANNULAR SPACE BETWEEN THE RINGS AND CONE BASIN, THE RINGS, AND THE RINGS AND COVER FRAME SHALL BE SEALED UTILIZING AN APPROVED BUTYL SEALANT.

DRAINAGE

THE CONTRACTOR SHALL CONDUCT HIS OPERATIONS SO AS TO MAINTAIN AT ALL TIMES STORM SEWER, DRAIN, AND DITCH FLOWS THROUGH EXISTING FACILITIES TO REMAIN IN PLACE AND THROUGH EXISTING FACILITIES TO BE REPLACED UNTIL NEW FACILITIES ARE COMPLETED AND PUT INTO SERVICE. THE FLOW OF ALL STORM SEWER, DRAINS, AND OTHER WATERCOURSES ENCOUNTERED AND DISTURBED OR DESTROYED DURING CONSTRUCTION SHALL BE RESTORED BY THE CONTRACTOR TO A CONDITION SATISFACTORY TO THE CITY ENGINEER. PAYMENT FOR THIS SHALL BE INCLUDED IN THE PRICES BID FOR THE VARIOUS ITEMS OF THE CONTRACT.

WHERE THE WORK CALLS FOR RELOCATION OF EXISTING DITCHES OR STORM SEWER, THE CONTRACTOR SHALL REESTABLISH THE OUTLETS OF ALL PRIVATE DRAINS ENCOUNTERED; SUCH AS DOWNSPOUTS, FOUNDATION DRAINS, CATCH BASINS, YARD DRAINS, ETC., INTO THE NEAREST NEW DITCH OR STORM SEWER. THE COST FOR REESTABLISHING PRIVATE DRAIN OUTLETS SHALL BE INCLUDED IN THE VARIOUS STORM SEWER ITEMS.

ITEM 601, ROCK CHANNEL PROTECTION, TYPE C WITH FILTER FABRIC SHALL BE PROVIDED AT THE OUTLET END OF STORM SEWERS AT THE LOCATIONS AND DIMENSIONS SHOWN ON THE PLANS. ITEM 601 MATERIALS SHALL CONSIST OF NATURAL, BROKEN, OR CRUSHED ROCK. BROKEN CONCRETE MATERIALS ARE UNACCEPTABLE. THE FILTER UNDERLYING ROCK CHANNEL PROTECTION BE FILTER FABRIC AS PER SECTION 601.09.

ALL EXISTING AND PROPOSED CASTINGS SHALL BE ADJUSTED TO MATCH THE SURROUNDING FINISH GRADE BY THE CONTRACTOR. TOP OF CASTING ELEVATIONS PROVIDED ON THE PLANS ARE APPROXIMATE. PAYMENT UNDER ITEM 604, MANHOLES ADJUSTED TO GRADE, SHALL ONLY BE FOR CASTING ADJUSTMENTS ON EXISTING MANHOLES THAT REQUIRE NO OTHER WORK. THE COST OF ALL CASTING ADJUSTMENTS SHALL BE INCLUDED IN THE VARIOUS SEWER ITEMS.

WHERE BACKFILLING WITH CONCRETE AROUND A STORM SEWER PIPE IS DETERMINED TO BE NECESSARY, BY EITHER CALL OUT ON THE PLANS, OR AS DIRECTED BY THE ENGINEER, THE WORK SHALL BE IN ACCORDANCE WITH THE CITY OF COLUMBUS STANDARD DRAWING AA-S151, TYPE 1 BEDDING FOR RIGID SEWER PIPE USING CLASS "A" CONCRETE. THE TOTAL LENGTH OF BACKFILL SHALL BE FOR ALL EXPOSED PORTIONS OF PIPE, OR AS DIRECTED BY THE ENGINEER.

REVIEW OF DRAINAGE FACILITIES

BEFORE ANY WORK IS STARTED ON THE PROJECT AND AGAIN BEFORE FINAL ACCEPTANCE BY THE CITY, REPRESENTATIVES OF THE CITY AND THE CONTRACTOR SHALL MAKE AN INSPECTION OF ALL EXISTING SEWERS WHICH ARE TO REMAIN IN SERVICE AND WHICH MAY BE AFFECTED BY THE WORK. THE CONDITION OF THE EXISTING CONDUITS AND THEIR APPURTENANCES SHALL BE DETERMINED FROM FIELD OBSERVATIONS. RECORDS OF THE INSPECTION SHALL BE KEPT IN WRITING BY THE CITY.

ALL NEW CONDUITS, INLETS, CATCH BASINS, AND MANHOLES CONSTRUCTED AS A PART OF THE PROJECT SHALL BE FREE OF ALL FOREIGN MATTER AND IN A CLEAN CONDITION BEFORE THE PROJECT WILL BE ACCEPTED BY THE CITY.

ALL EXISTING SEWERS INSPECTED INITIALLY BY THE ABOVE MENTIONED PARTIES SHALL BE MAINTAINED AND LEFT IN A CONDITION REASONABLY COMPARABLE TO THAT DETERMINED BY THE ORIGINAL INSPECTION. ANY CHANGE IN THE CONDITION RESULTING FROM THE CONTRACTOR'S OPERATIONS SHALL BE CORRECTED BY THE CONTRACTOR TO THE SATISFACTION OF THE CITY ENGINEER.

PAYMENT FOR ALL INSPECTIONS, CLEANING, AND MAINTENANCE OF EXISTING AND NEW STORM SEWER DESCRIBED ABOVE SHALL BE INCLUDED IN THE CONTRACT PRICE FOR THE PERTINENT CONTRACT ITEMS.

CROSSINGS AND CONNECTIONS TO EXISTING PIPES AND UTILITIES

WHERE PLANS CALL FOR CONDUIT TO BE CONNECTED TO, OR CROSS OVER OR UNDER AN EXISTING SEWER OR UNDERGROUND UTILITY, THE CONTRACTOR SHALL LOCATE THE EXISTING PIPES OR UTILITIES FOR BOTH LINE AND GRADE BEFORE STARTING TO LAY THE PROPOSED CONDUIT.

IF IT IS DETERMINED THAT THE ELEVATION OF THE EXISTING CONDUIT OR EXISTING APPURTENANCE TO BE CONNECTED DIFFERS FROM THE PLAN ELEVATION, THE CITY ENGINEER SHALL BE NOTIFIED BEFORE STARTING CONSTRUCTION OF ANY PORTION OF THE PROPOSED CONDUIT WHICH WILL BE AFFECTED BY THE VARIANCE IN THE EXISTING ELEVATIONS.

IF IT IS DETERMINED THAT A PROPOSED CONDUIT WILL CONFLICT WITH AN EXISTING SEWER OR UNDERGROUND UTILITY WHEN CONSTRUCTED AS SHOWN ON THE PLAN, THE CITY ENGINEER SHALL BE NOTIFIED BEFORE STARTING CONSTRUCTION ON ANY PORTION OF THE PROPOSED CONDUIT WHICH WOULD BE AFFECTED BY THE CONFLICT.

PAYMENT FOR DETERMINATION OF LINE AND GRADE OF EXISTING UTILITIES AS REQUIRED SHALL BE INCLUDED IN THE CONTRACT PRICE FOR THE PERTINENT CONTRACT ITEMS.

ITEM 604 – CATCH BASIN (AA-S133A) WITH BIKE SAFE GRATE

BICYCLE SAFE GRATES SHALL BE USED FOR ALL PROPOSED CATCH BASINS. ALL CATCH BASINS ARE TO BE EQUIPPED WITH EAST JORDAN #5110, TYPE M3 GRATES.

EROSION CONTROL DETAILS

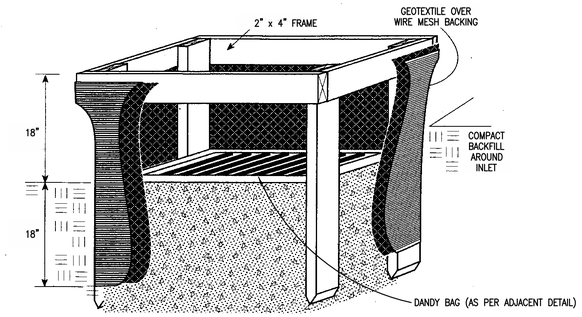

1. Inlet protection shall be constructed either before upslope land disturbance begins or before the storm drain becomes operational.

2. The earth around the inlet shall be excavated completely to a depth at least 18 in.

3. The wooden frame shall be constructed of 2-by-4-in. construction-grade lumber. The 2-by-4-in. posts shall be driven 1 ft. into the ground at four corners of the inlet and the top portion of 2-by-4-in. frame assembled using the overlap joint shown. The top of the frame shall be at least 6 in. below adjacent roads if ponded water would pose a safety hazard to traffic.

4. Wire mesh shall be of sufficient strength to support fabric with water fully impounded against it. It shall be stretched tightly around the frame and fastened securely to the frame.

5. Geotextile shall have an equivalent opening size of 20-40 sieve and be resistant to sunlight. It shall be stretched tightly around the frame and fastened securely. It shall extend from the top of the frame to 18 in. below the inlet notch elevation. The geotextile shall overlap across one side of the inlet so the ends of the cloth are not fastened to the same post.

6. Backfill shall be placed around the inlet in compacted 6-in. layers until the earth is even with notch elevation on ends and top elevation on sides.

7. A compacted earth dike or a check dam shall be constructed in the ditch line below the inlet if the inlet is not in a depression and if runoff bypassing the inlet will not flow to a settling pond. The top of earth dikes shall be at least 6 in. higher than the top of the frame.

INLET PROTECTION DETAIL

FOR CATCH BASINS

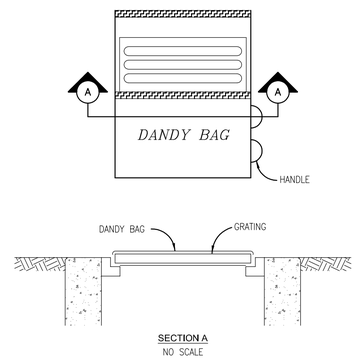

INSTALLATION: STAND GRATE ON END. PLACE DANDY BAG OVER GRATE. FLIP GRATE OVER SO THAT OPEN END IS UP. PULL UP SLACK. TUCK FLAP IN. BE SURE END OF GRATE IS COMPLETELY COVERED BY FLAP OR DANDY BAG WILL NOT FIT PROPERLY. HOLDING HANDLES, CAREFULLY PLACE DANDY BAG WITH GRATE INSERTED INTO CATCH BASIN FRAME SO THAT RED DOT ON THE TOP OF THE DANDY BAG IS VISIBLE.

MAINTENANCE: AFTER SILT HAS DRIED, REMOVE IT FROM THE SURFACE OF DANDY BAG WITH BROOM.

DANDY BAG DETAIL

FOR CATCH BASINS

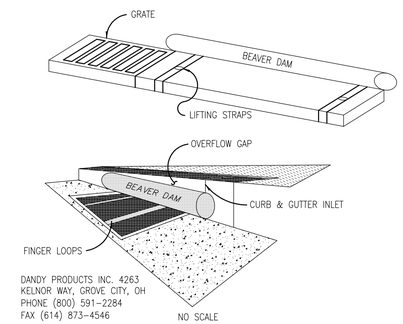

INSTALLATION: STAND GRATE ON END. SLIDE THE BEAVER DAM BAG ON WITH DAM ON TOP OF GRATE. PULL ALL EXCESS DOWN. LAY UNIT ON ITS SIDE. CAREFULLY TUCK FLAP IN. PRESS VELCRO STRIPS TOGETHER. INSTALL THE UNIT MAKING SURE FRONT EDGE OF GRATE IS INSERTED IN FRAME FIRST THEN LOWER BACK INTO PLACE. PRESS VELCRO DOTS TOGETHER WHICH ARE LOCATED UNDER LIFTING STRAPS. THIS INSURES STRAPS REMAIN FLUSH WITH GUTTER.

MAINTENANCE: WITH A STIFF BRISTLE BROOM SWEEP SILT & OTHER DEBRIS OFF SURFACE AFTER EACH EVENT.

BEAVER DAM DETAIL

FOR CURB & GUTTER INLETS

TEMPORARY EROSION CONTROL NOTES

1. THE DESIGN OF EROSION CONTROL SYSTEMS SHALL FOLLOW THE REQUIREMENTS OF OHIO EPA, ITEM 207 OF OHIO DEPARTMENT OF TRANSPORTATION (ODOT) STANDARD SPECIFICATIONS, AND THE CITY ENGINEER. THE CONTRACTOR SHALL BE CONSIDERED THE DEVELOPER OF STORMWATER DISCHARGE.

2. THE CONTRACTOR SHALL PROVIDE SEDIMENT CONTROL AT ALL POINTS WHERE WATER LEAVES THE PROJECT, INCLUDING WATERWAYS, OVERLAND SHEET FLOW, AND STORM SEWERS, WHETHER SPECIFICALLY SHOWN ON THE PLANS OR NOT.

3. ACCEPTED METHODS OF PROVIDING EROSION/SEDIMENT CONTROL INCLUDE, BUT ARE NOT LIMITED TO: SEDIMENT FILTERS, SILT FILTER FENCE, ROCK CHECK DAMS, AND TEMPORARY GROUND COVER.

4. THE CONTRACTOR SHALL PROVIDE ADEQUATE DRAINAGE OF THE WORK AREA AT ALL TIMES CONSISTENT WITH EROSION CONTROL PRACTICES.

5. DISTURBED AREAS THAT WILL REMAIN UNWORKED FOR 45 DAYS OR MORE SHALL BE SEEDED WITHIN 7 CALENDAR DAYS OF THE DISTURBANCE. OTHER SEDIMENT CONTROLS THAT ARE INSTALLED SHALL BE MAINTAINED UNTIL VEGETATIVE GROWTH HAS BEEN ESTABLISHED. THE CONTRACTOR SHALL BE RESPONSIBLE FOR THE REMOVAL OF ALL TEMPORARY SEDIMENT DEVICES AT THE CONCLUSION OF CONSTRUCTION BUT NOT BEFORE GROWTH OF PERMANENT GROUND COVER.

6. ALL DENUDED AREAS, INCLUDING STOCKPILED TOPSOIL AND EXCAVATED MATERIAL, ARE TO BE PROTECTED THROUGH THE USE OF TEMPORARY SEEDING OR COVERED WITH STRAW MULCH.

7. FINAL GRADING WILL BE CONSISTENT WITH PRECONSTRUCTION TOPOGRAPHY TO MAINTAIN DRAINAGE AND AESTHETICS.

8. REMOVE ONLY THE TREES, SHRUBS, AND GRASSES THAT MUST BE REMOVED TO PERMIT ACTUAL CONSTRUCTION, EXCEPT WHERE NOTED OTHERWISE IN THE PLANS. PROTECT THE REMAINING TO PRESERVE THEIR AESTHETIC AND EROSION CONTROL VALUE.

9. BACKFILL TRENCHES IMMEDIATELY AFTER USE. SEED AND MULCH TRENCH AREA WITHIN ONE WEEK AFTER AREA OR SECTION HAS BEEN OPENED.

10. SETTLING FACILITIES, SEDIMENT FILTERS, PERIMETER CONTROLS, AND OTHER PRACTICES INTENDED TO TRAP SEDIMENT SHALL BE IMPLEMENTED AS THE FIRST STEP OF GRADING OR CONSTRUCTION AND WITHIN 7 DAYS FORM THE START OF GRUBBING. THEY SHALL CONTINUE TO FUNCTION UNTIL THE UPSLOPE DEVELOPMENT AREA IS STABILIZED.

11. STORM INLET PROTECTION – ALL STORM SEWER INLETS WHICH ACCEPT WATER RUNOFF FROM THE PROJECT AREA SHALL BE PROTECTED SO THAT SILT-LADEN WATER WILL NOT ENTER THE STORM SEWER SYSTEM WITHOUT FIRST BEING FILTERED OR OTHERWISE TREATED TO REMOVE SEDIMENT, UNLESS THE STORM SEWER SYSTEM DRAINS TO A SETTLING FACILITY. THESE CONTROLS SHALL BE SELECTED AND LOCATED AS INDICATED IN THE PLANS AND AS DIRECTED BY THE ENGINEER.

12. WORKING IN OR CROSSING STREAMS – STREAMS INCLUDING BED AND BANKS SHALL BE RESTABILIZED IMMEDIATELY AFTER IN-CHANNEL WORK IS COMPLETED, INTERRUPTED, OR STOPPED. TO THE EXTENT PRACTICABLE, CONSTRUCTION VEHICLES SHALL BE KEPT OUT OF STREAMS. WHERE IN-CHANNEL WORK IS NECESSARY, PRECAUTIONS SHALL BE TAKEN TO STABILIZE THE WORK AREA DURING CONSTRUCTION TO MINIMIZE EROSION. WHERE A STREAM MUST BE CROSSED BY CONSTRUCTION VEHICLES REGULARLY DURING CONSTRUCTION, A TEMPORARY CULVERT SHALL BE PROVIDED.

13. CONSTRUCTION ACCESS ROUTES – MEASURES SHALL BE TAKEN TO PREVENT SOIL TRANSPORT ONTO SURFACES WHERE RUNOFF IS NOT CHECKED BY SEDIMENT CONTROLS, OR ONTO PUBLIC ROADS. THE CONTRACTOR SHALL BE RESPONSIBLE TO ENSURE THAT OFF-SITE TRACKING OF SEDIMENTS BY VEHICLES AND EQUIPMENT OF ELIMINATED. SEE STABILIZED CONSTRUCTION ENTRANCE DETAIL, THIS SHEET.

14. SLOUGHING AND DUMPING – NO SOIL, ROCK, DEBRIS, OR ANY OTHER MATERIAL SHALL BE DUMPED OR PLACED IN A WATER RESOURCE, OR INTO SUCH PROXIMITY THAT IT MAY READILY SLOUGH, SLIP OR ERODE INTO A WATER RESOURCE UNLESS SUCH DUMPING OR PLACING IS AUTHORIZED BY THE CITY ENGINEER. UNSTABLE SOILS PRONE TO SLIPPING OR LANDSLIDING SHALL NOT BE GRADED, EXCAVATED, FILLED, OR HAVE LOADS IMPOSED UPON THEM UNLESS THE WORK IS DONE IN ACCORDANCE WITH A QUALIFIED PROFESSIONAL ENGINEER'S RECOMMENDATIONS TO CORRECT, ELIMINATE, OR ADEQUATELY ADDRESS THE PROBLEMS.

15. MAINTENANCE AND INSPECTION – ALL TEMPORARY AND PERMANENT EROSION AND SEDIMENT CONTROL PRACTICES SHALL BE DESIGNED AND CONSTRUCTED TO MINIMIZE MAINTENANCE REQUIREMENTS. THEY SHALL BE MAINTAINED AND REPAIRED AS NEEDED TO ENSURE CONTINUED PERFORMANCE OF THEIR INTENDED FUNCTION. MAINTENANCE AND INSPECTION OF ALL EROSION/SEDIMENT CONTROL DEVICES REQUIRED BY THE CITY ENGINEER SHALL BE THE SOLE RESPONSIBILITY OF THE CONTRACTOR. INSPECTIONS SHALL BE PERFORMED BY THE CONTRACTOR IN THE PRESENCE OF THE CITY ENGINEER, ONCE EVERY 7 CALENDAR DAYS AND/OR WITHIN 24 HOURS AFTER A RAIN EVENT OF GREATER THAN 0.5 INCHES IN A 24-HOUR PERIOD. THESE INSPECTIONS SHALL IDENTIFY AREAS CONTRIBUTING TO STORMWATER DISCHARGES ASSOCIATED WITH PROJECT; EVALUATE THE ADEQUACY, IMPLEMENTATION, AND MAINTENANCE OF EXISTING AND PROPOSED EROSION/SEDIMENTATION MEASURES; AND DETERMINE WHETHER ADDITIONAL MEASURES ARE REQUIRED. ACCEPTABLE INSPECTION REPORTS SHALL BE PREPARED BY THE CONTRACTOR AND SUBMITTED TO THE CITY ENGINEER WITHIN 48 HOURS OF INSPECTION COMPLETION. THE REPORT SHALL CONTAIN THE RESULTS OF THE INSPECTION, NAMES AND QUALIFICATIONS OF PERSONNEL MAKING THE INSPECTION, MAJOR OBSERVATIONS RELATING TO THE IMPLEMENTATION OF THE TEMPORARY EROSION AND SEDIMENT CONTROL PLAN, A CERTIFICATION THAT THE FACILITY IS IN COMPLIANCE WITH THE PLAN, AND IDENTIFYING ANY INCIDENTS OF NONCOMPLIANCE.

16. OUTFLOWS FROM DEWATERING OPERATIONS – ALL WATER PRODUCED FROM CLEANING AAND DEWATERING OPERATIONS, WHETHER SPECIFICALLY FROM TRENCH DEWATERING OPERATIONS OR FROM MORE EXTENSIVE DEWATERING OPERATIONS, SHALL BE DISCHARGED IN SUCH A MANNER AS TO ELIMINATE SEDIMENT FROM SUCH DISCHARGE AND PREVENT EROSION DOWNSTREAM OF THE DISCHARGE POINT.

17. ADDITIONAL CONTROLS – THE CONTRACTOR SHALL ENSURE THAT NO SEDIMENTS ARE TRACKED OFF-SITE BY CONSTRUCTION EQUIPMENT, VEHICLES, AND WORKERS. THE CONTRACTOR SHALL ALSO ENSURE THAT NO SOLID OR LIQUID WASTE IS DISCHARGED INTO ANY STORMWATER FLOW.

18. TEMPORARY EROSION AND SEDIMENT CONTROL PLAN AVAILABILITY AND UPDATES – THE CONTRACTOR SHALL BE SOLELY RESPONSIBLE TO ALL UPDATES AND ADJUSTMENTS TO THE TEMPORARY EROSION AND SEDIMENT CONTROL PLAN.

19. THE CONTRACTOR SHALL NOT USE CONSTRUCTION PROCEDURES, ACTIVITIES, OR OPERATIONS THAT MAY UNNECESSARILY IMPACT THE NATURAL ENVIRONMENT OR THE PUBLIC HEALTH AND SAFETY. PROHIBITED CONSTRUCTION PROCEDURES, ACTIVITIES, OR OPERATIONS INCLUDE, BUT ARE NOT LIMITED TO, THE FOLLOWING:

A. DISPOSING OF EXCESS OR UNSUITABLE EXCAVATED MATERIAL IN WETLANDS OR FLOODPLAINS, EVEN WITH THE PERMISSION OF THE PROPERTY OWNER.
B. INDISCRIMINATE, ARBITRARY, OR CAPRICIOUS OPERATION OF EQUIPMENT IN ANY STREAM CORRIDORS, ANY WETLANDS, ANY SURFACE WATERS, OR OUTSIDE THE EASEMENT LIMITS.
C. PUMPING OF SEDIMENT-LADEN WATER FROM TRENCHES OR OTHER EXCAVATIONS INTO ANY SURFACE WATERS, ANY STREAM CORRIDORS, ANY WETLANDS, OR STORM DRAINS.

D. DISCHARGING POLLUTANTS, SUCH AS CHEMICALS, FUELS, LUBRICANTS, BITUMINOUS MATERIALS, RAW SEWAGE, AND/OR ANY OTHER HARMFUL WASTE, INTO OR ALONGSIDE OF RIVERS, STREAMS, IMPOUNDMENTS, OR INTO NATURAL OR MAN-MADE CHANNELS LEADING THERETO.

E. PERMANENT OR UNSPECIFIED ALTERATION OF THE FLOWLINE OF A STREAM.

F. DAMAGING VEGETATION OUTSIDE OF THE CONSTRUCTION AREA.

G. DISPOSAL OF TREES, BRUSH, AND OTHER DEBRIS IN ANY STREAM CORRIDORS, WETLANDS, OR SURFACE WATERS.

H. OPEN BURNING OF PROJECT DEBRIS WITHOUT PERMIT.

I. STORING CONSTRUCTION EQUIPMENT AND VEHICLES OR STOCKPILING CONSTRUCTION MATERIALS ON PROPERTY (PUBLIC OR PRIVATE) NOT PREVIOUSLY SPECIFIED BY THE CITY ENGINEER FOR SAID PURPOSES.

ITEM 614 – MAINTAINING TRAFFIC

A MINIMUM OF ONE (1) LANE OF TRAFFIC IN EACH DIRECTION SHALL BE MAINTAINED AT ALL TIMES.

LENGTH AND DURATION OF LANE CLOSURES AND RESTRICTIONS SHALL BE AT THE APPROVAL OF THE ENGINEER. IT IS THE INTENT TO MINIMIZE THE IMPACT TO THE TRAVELING PUBLIC. LANE CLOSURES OR RESTRICTIONS OVER SEGMENTS OF THE PROJECT IN WHICH NO WORK IS ANTICIPATED WITHIN A REASONABLE TIME FRAME, AS DETERMINED BY THE ENGINEER, SHALL NOT BE PERMITTED. THE LEVEL OF UTILIZATION OF MAINTENANCE OF TRAFFIC DEVICES SHALL BE COMMENSURATE WITH THE WORK IN PROGRESS.

THE CONTRACTOR SHALL NOTIFY THE CITY OF DUBLIN AT LEAST 14 DAYS IN ADVANCE OF ANY PLANNED CLOSURES OR OTHER DISRUPTION OF TRAFFIC.

THE CONTRACTOR SHALL MAINTAIN ACCESS FROM PUBLIC ROADWAYS TO ALL ABUTTING PROPERTIES THROUGHOUT CONSTRUCTION OF THIS PROJECT, AS WELL AS ACCESS FOR MAIL, WATER, SANITARY SERVICE AND EMERGENCY VEHICLES.

THROUGHOUT CONSTRUCTION OF SHARED–USE PATH AND PEDESTRIAN BRIDGE ALONG BOTH NORTHBOUND AND SOUTHBOUND MUIRFIELD DRIVE (BRAND ROAD TO MOORS PLACE), THE CONTRACTOR SHALL CLOSE THE OUTSIDE LANE OF MUIRFIELD DRIVE FROM JUST SOUTH OF THE BRIDGE OVER NORTH FORK INDIAN RUN TO JUST NORTH OF MOORS PLACE TO WITH DRUMS IN ACCORDANCE WITH ODOT STANDARD CONSTRUCTION DRAWING MT–95.30. IF EXISTING BRIDGE GUARDRAIL IS DISTURBED BY THE CONTRACTOR DURING CONSTRUCTION OF THE PROPOSED PEDESTRIAN BRIDGE, SUCH THAT THE GUARDRAIL IS DEEMED BY THE CITY TO PROVIDE INSUFFICIENT PROTECTION FOR VEHICULAR TRAFFIC, PORTABLE CONCRETE BARRIER SHALL BE PROVIDED IN ACCORDANCE WITH ODOT STANDARD CONSTRUCTION DRAWING MT–95.40.

THE CONTRACTOR SHALL PROVIDE, ERECT AND MAINTAIN SIGNS AND SIGN SUPPORTS AS DETAILED IN THE OHIO MANUAL OF UNIFORM TRAFFIC CONTROL DEVICES.

IN THE EVENT THAT IT BECOMES NECESSARY FOR THE CITY TO PERFORM WORK OF AN IMMEDIATE NATURE (SUCH AS THE PLACEMENT OF BARRICADES OR REPLACEMENT OF SIGNS AND OTHER WARNING OR PROTECTIVE DEVICES) BECAUSE OF FAILURE OR REFUSAL OF THE CONTRACTOR TO PERFORM SUCH WORK AS REQUIRED BY THE CONTRACT, THE CONTRACTOR SHALL REIMBURSE THE CITY AT THE RATE OF 2.5 TIMES THE ACTUAL COST OF LABOR, MATERIALS, AND EQUIPMENT NECESSARY TO PERFORM SUCH WORK. THE CITY SHALL BE REQUIRED TO NOTIFY OR ATTEMPT TO NOTIFY THE DESIGNATED REPRESENTATIVE OF THE CONTRACTOR OF THE NECESSITY TO PERFORM SUCH WORK. IF THE CONTRACTOR REFUSES OR FAILS WITHIN A REASONABLE TIME TO PERFORM OR CAUSE THE PERFORMANCE OF SUCH WORK, THE CITY SHALL BE REIMBURSED BY THE CONTRACTOR IN THE AMOUNT PROVIDED HEREIN BY WAY OF A DEDUCTION FROM THE CONTRACTOR'S NEXT PAYMENT UNDER THE CONTRACT. REASONABLE TIME FOR ALL STREETS INVOLVED ON THIS CONTRACT IS 2 HOURS FROM THE TIME OF NOTIFICATION BY THE CITY.

ALL WORK AND TRAFFIC CONTROL DEVICES SHALL BE IN ACCORDANCE WITH CMS 614 AND OTHER APPLICABLE PORTIONS OF THE SPECIFICATIONS, AS WELL AS THE OHIO MANUAL OF UNIFORM TRAFFIC CONTROL DEVICES. PAYMENT FOR ALL LABOR, EQUIPMENT AND MATERIALS SHALL BE INCLUDED IN THE LUMP SUM CONTRACT PRICE FOR ITEM 614 – MAINTAINING TRAFFIC, UNLESS SEPARATELY ITEMIZED IN THE PLAN.

ITEM 614 LAW ENFORCEMENT OFFICER WITH PATROL CAR, AS PER PLAN

THE REQUIREMENTS OF THE CITY OF COLUMBUS CMS FOR ITEM 614 SHALL BE REQUIRED EXCEPT AS HEREIN NOTED.

USE OF LAW ENFORCEMENT OFFICES (LEOS) BY CONTRACTORS OTHER THAN THE USES SPECIFIED IN THIS NOTE WILL NOT BE PERMITTED AT PROJECT COST UNLESS PRIOR APPROVAL HAS BEEN OBTAINED FROM THE ENGINEER. LEOS SHOULD NOT BE USED WHERE THE OHIO MANUAL OF UNIFORM TRAFFIC CONTROL DEVICES (OMUTCD) INTENDS FOR FLAGGERS BE USED.

IN ADDITION TO THE REQUIREMENTS OF CMS 614 AND THE OMUTCD, A UNIFORMED LEO WITH AN OFFICIAL PATROL CAR (CAR WITH TOP–MOUNTED EMERGENCY FLASHING LIGHTS AND COMPLETE MARKINGS OF THE APPROPRIATE LAW ENFORCEMENT AGENCY) SHOULD BE PROVIDED FOR CONTROLLING TRAFFIC FOR THE FOLLOWING TASKS:

A. FOR LANE CLOSURES: DURING INITIAL SET–UP PERIODS, TEAR DOWN PERIODS, SUBSTANTIAL SHIFTS OF A CLOSURE POINT OR WHEN NEW LANE CLOSURE ARRANGEMENTS ARE INITIATED. IN GENERAL, LEOS SHOULD BE POSITIONED AT THE POINT OF LANE RESTRICTION OR ROAD CLOSURE AND TO MANUALLY CONTROL TRAFFIC MOVEMENTS THROUGH INTERSECTIONS IN WORK ZONES.

B. DURING THE ENTIRE ADVANCE PREPARATION AND CLOSURE SEQUENCE WHERE BLOCKAGE OF TRAFFIC IS REQUIRED.

LEOS WORK AT THE DIRECTION OF THE CONTRACTOR. THE CONTRACTOR IS RESPONSIBLE FOR SECURING THE SERVICES OF THE LEOS AND COMMUNICATING THE INTENTIONS OF THE PLANS WITH RESPECT TO DUTIES OF THE LEOS. THE ENGINEER SHALL HAVE FINAL CONTROL OVER THE LEOS' DUTIES AND PLACEMENT AND WILL RESOLVE ANY ISSUES THAT MAY ARISE BETWEEN THE TWO PARTIES. THE CONTRACTOR SHALL UTILIZE ANY OF THE FOLLOWING LAW ENFORCEMENT AGENCY(S): CITY OF DUBLIN, FRANKLIN COUNTY SHERRIF'S OFFICE, OR OHIO STATE HIGHWAY PATROL.

LAW ENFORCEMENT OFFICERS WITH PATROL CAR REQUIRED BY THE TRAFFIC MAINTENANCE TASKS ABOVE SHALL BE PAID FOR ON A UNIT PRICE (HOURLY) BASIS UNDER ITEM 614 LAW ENFORCEMENT OFFICE WITH PATROL CAR. THE FOLLOWING ESTIMATED QUANTITY HAS BEEN CARRIED TO THE GENERAL SUMMARY.

ITEM 614	LAW ENFORCEMENT OFFICER WITH PATROL CAR, AS PER PLAN	70 HOURS

THE HOURS PAID SHALL INCLUDE MINIMUM SHOW–UP TIME REQUIRED BY THE LAW ENFORCEMENT AGENCY INVOLVED. ANY ADDITIONAL COSTS (ADMINISTRATIVE OR OTHERWISE) INCURRED BY THE CONTRACTOR TO OBTAIN THE SERVICES OF AN LEO ARE INCLUDED WITH THE BID UNIT PRICE FOR ITEM 614 LAW ENFORCEMENT OFFICER WITH PATROL CAR, AS PER PLAN.

DRUM REQUIREMENTS

PAYMENT FOR DRUMS SHALL BE INCLUDED IN THE LUMP SUM BID FOR MAINTAINING TRAFFIC.

CALCULATED FGW
CHECKED EAK

MAINTENANCE OF TRAFFIC NOTES

MUIRFIELD DRIVE / NORTH FORK
INDIAN RUN PEDESTRIAN BRIDGES

ITEM	DESCRIPTION	TOTAL	UNIT
	GENERAL		
614	MAINTAINING TRAFFIC	1	LUMP
623	CONSTRUCTION LAYOUT STAKES	1	LUMP
624	MOBILIZATION	1	LUMP
	ROADWAY		
201	CLEARING AND GRUBBING	1	LUMP
204	EXCAVATION OF SUBGRADE	30	CY
204	GRANULAR EMBANKMENT, NO. 2 STONE	30	CY
SPECIAL	PROOF SURVEY	1	LUMP
	NORTHBOUND SHARED–USE PATH		
201	TREE REMOVED, 18" SIZE	1	EACH
203	EXCAVATION	55	CY
203	EMBANKMENT	210	CY
204	SUBGRADE COMPACTION	360	SY
653	TOPSOIL FURNISHED AND PLACED, AS PER PLAN	36	CY
	SOUTHBOUND SHARED–USE PATH		
201	TREE REMOVED, 18" SIZE	1	EACH
202	CURB REMOVED AND DISPOSED OF	56	FT
202	CURB AND GUTTER REMOVED AND DISPOSED OF	23	FT
202	PAVEMENT REMOVED	7	SY
203	EXCAVATION	125	CY
203	EMBANKMENT	211	CY
204	SUBGRADE COMPACTION	459	SY
608	4" CONCRETE WALK, AS PER PLAN	136	SF
608	CURB RAMP, AS PER PLAN	2	EACH
608	DETECTABLE WARNING, 2' x 8', AS PER PLAN	2	EACH
653	TOPSOIL FURNISHED AND PLACED, AS PER PLAN	140	CY
SPECIAL	LIMESTONE STEPS	25	FT
	EROSION CONTROL		
	NORTHBOUND SHARED–USE PATH		
207	PERIMETER FILTER FABRIC FENCE	200	FT
207	INLET PROTECTION	4	EACH
601	ROCK CHANNEL PROTECTION, TYPE D WITH FABRIC FILTER	4	CY
659	SEEDING AND MULCHING, AS PER PLAN	435	SY
659	COMMERCIAL FERTILIZER	0.06	TON
659	WATER	2	M GAL
	SOUTHBOUND SHARED–USE PATH		
207	PERIMETER FILTER FABRIC FENCE	200	FT
601	ROCK CHANNEL PROTECTION, TYPE D WITH FABRIC FILTER	2	CY
659	SEEDING AND MULCHING, AS PER PLAN	858	SY
659	COMMERCIAL FERTILIZER	0.12	TON
659	WATER	4	M GAL
SPECIAL	TREE PROTECTION FENCE	500	FT

ITEM	DESCRIPTION	TOTAL	UNIT
	DRAINAGE		
	NORTHBOUND SHARED–USE PATH		
604	INLINE DRAIN WITH HEAVY DUTY GRATE	2	EACH
604	MANHOLE RECONSTRUCTED TO GRADE	1	EACH
901	12" PIPE, WITH TYPE 1 BEDDING, 706.02	16	LF
SPECIAL	18" ADS FLARED END SECTION WITH DISSIMILAR COUPLER	2	EACH
	SOUTHBOUND SHARED–USE PATH		
604	INLINE DRAIN WITH HEAVY DUTY GRATE	1	EACH
901	12" PIPE, WITH TYPE 1 BEDDING, 706.02	53	LF
SPECIAL	12" ADS FLARED END SECTION WITH DISSIMILAR COUPLER	1	EACH
SPECIAL	21" CONCRETE FLARED END SECTION	1	EACH
	PAVEMENT		
	NORTHBOUND SHARED–USE PATH		
301	ASPHALT CONCRETE BASE, PG64–22	54	TON
304	AGGREGATE BASE	60	CY
448	ASPHALT CONCRETE SURFACE COURSE, TYPE 1, PG64–22, MEDIUM TRAFFIC	24	TON
	SOUTHBOUND SHARED–USE PATH		
301	ASPHALT CONCRETE BASE, PG64–22	73	TON
304	AGGREGATE BASE	77	CY
448	ASPHALT CONCRETE SURFACE COURSE, TYPE 1, PG64–22, MEDIUM TRAFFIC	32	TON
452	8" NON–REINFORCED CONCRETE PAVEMENT	12	SY
609	6" CONCRETE COMBINATION CURB AND GUTTER, AS PER PLAN	23	FT
609	STRAIGHT 18" CONCRETE CURB	49	FT
	WATER		
	SOUTHBOUND SHARED–USE PATH		
807	VALVE BOXES ADJUSTED TO GRADE	1	EACH

ITEM	DESCRIPTION	TOTAL	UNIT
	TRAFFIC CONTROL *		
	SOUTHBOUND SHARED–USE PATH		
630	REMOVAL OF GROUND MOUNTED SIGN AND REERECTION	3	EACH
630	REMOVAL OF GROUND MOUNTED POST SUPPORT AND REERECTION	3	EACH
644	STOP LINE, 24"	16	FT
	STRUCTURES		
	PEDESTRIAN BRIDGE OVER NORTH FORK INDIAN RUN		
	ALONG NORTHBOUND MUIRFIELD DRIVE		
	SEE SHEET 17		
	PEDESTRIAN BRIDGE OVER NORTH FORK INDIAN RUN		
	ALONG SOUTHBOUND MUIRFIELD DRIVE		
	SEE SHEET 25		
	MAINTENANCE OF TRAFFIC		
614	LAW ENFORCEMENT OFFICER WITH PATROL CAR, AS PER PLAN	70	HOURS

* DENOTES OHIO DEPARTMENT OF TRANSPORTATION CONSTRUCTION AND MATERIAL SPECIFICATIONS (2013 EDITION). ALL OTHER ITEMS REFERENCE CITY OF COLUMBUS CONSTRUCTION AND MATERIAL SPECIFICATIONS.

CALCULATED LMO
CHECKED FGW

GENERAL SUMMARY

MUIRFIELD DRIVE / NORTH FORK INDIAN RUN PEDESTRIAN BRIDGES

COORDINATES ARE OHIO STATE PLANE SOUTH ZONE

SOUTHBOUND MUIRFIELD DRIVE

NORTHBOUND MUIRFIELD DRIVE

BRAND ROAD

NORTH FORK INDIAN RUN

MUIRFIELD ASSOCIATION INC.

7847 NASSAU LOOP

MATCH LINE – STA. 103+50, SEE SHEET 10

PC 100+03.38
PT 100+24.40
PC 100+56.90
PT 100+92.30
PC 101+68.29
PT 101+82.79
PC 103+36.08

SAVE

N 775583.7715
E 1786992.2178

L=21.0
Δ=12°2'40"
R=100.0

L=35.4
Δ=10°8'36"
R=200.0

L=14.4
Δ=8°18'24"
R=100.0

PROP. SHARED-USE PATH

EX. EASEMENT

EX. SHARED-USE PATH

CONSTRUCTION LIMIT

EX. 3" GAS, LOCATION APPROXIMATE

PROP. PEDESTRIAN BRIDGE

RCP, TYPE D
W/ FABRIC FILTER
4'x4'x18"

EX. 18" RCP
FL = 895.47
ADD 18" ADS N-12
FLARED END SECTION
W/DISSIMILAR COUPLER

RECONSTRUCT TO GRADE
EX. RIM = 901.13
PROP. RIM = 903.00

EX. 18" RCP
FL = 896.05
ADD 18" ADS N-12
FLARED END SECTION
W/DISSIMILAR COUPLER

PROP. PERMANENT EASEMENT

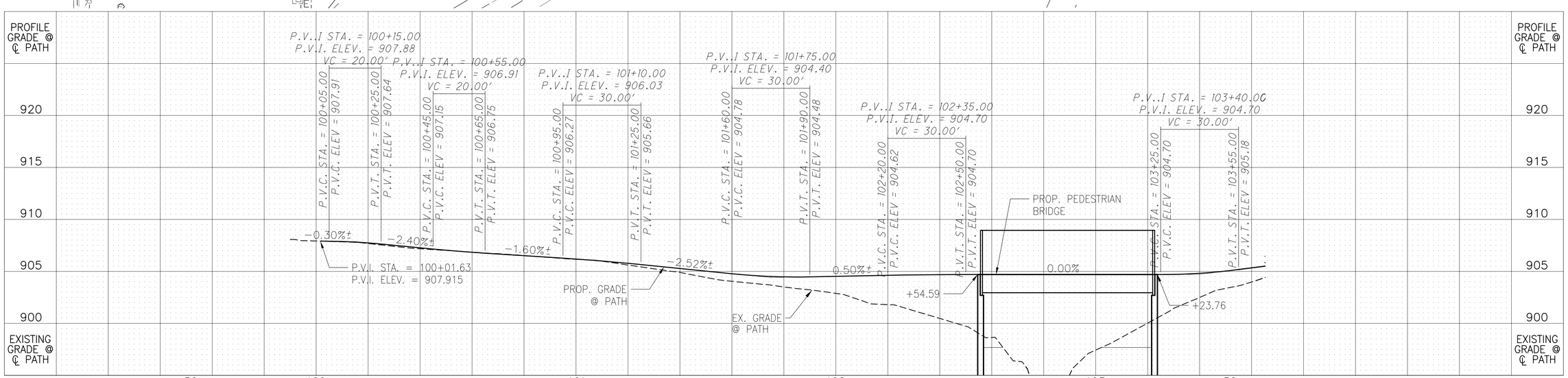

HORIZONTAL SCALE IN FEET
0 10 20 40

CALCULATED EAK
CHECKED FGW

PLAN AND PROFILE - NORTHBOUND SHARED-USE PATH
STA. 100+01.63 TO STA. 103+50.00

MUIRFIELD DRIVE / NORTH FORK
INDIAN RUN PEDESTRIAN BRIDGES

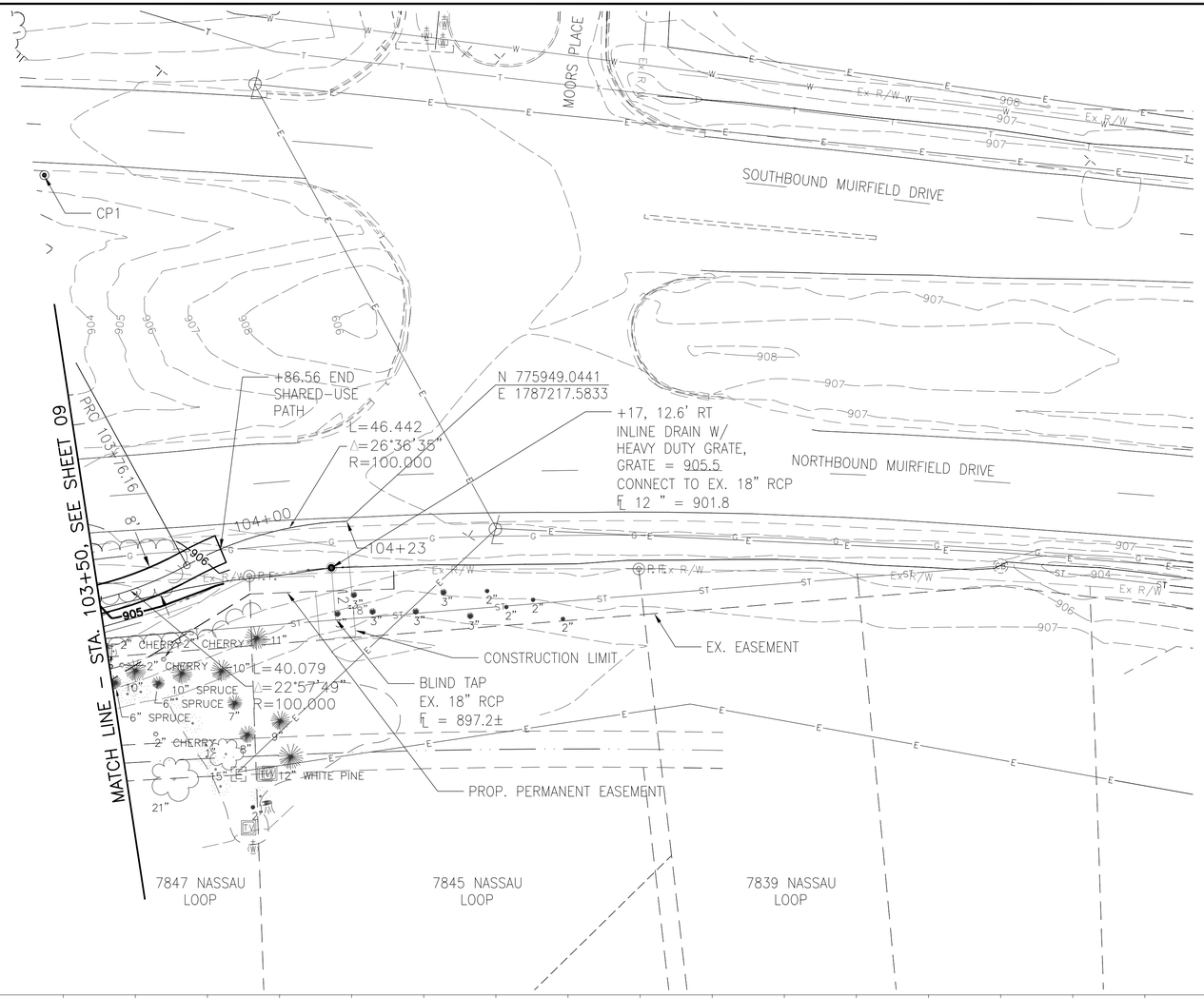

BENCHMARK:

N39RESET ELEV. = 886.77 (NAVD88)

ALUMINUM DISK SET IN THE TOP OF THE SOUTH END OF THE EAST ABUTMENT OF BRAND ROAD BRIDGE WAS-44-2.09 OVER NORTH FORK INDIAN RUN, 0.20 MILES NORTHWEST OF COFFMAN ROAD.

CONTROL POINTS

REF #	℄ C STATION	℄ C OFFSET	NORTHING	EASTING	ELEV.	DESCRIPTION
CP1	4+65.10	31.59' RT.	775940.3664	1787090.3763	905.78	IPINS /CAPPED WESCG #500102
CP2			775455.0293	1786773.9818	910.16	IPINS /CAPPED WESCG #500101

COORDINATES ARE OHIO STATE PLANE SOUTH ZONE

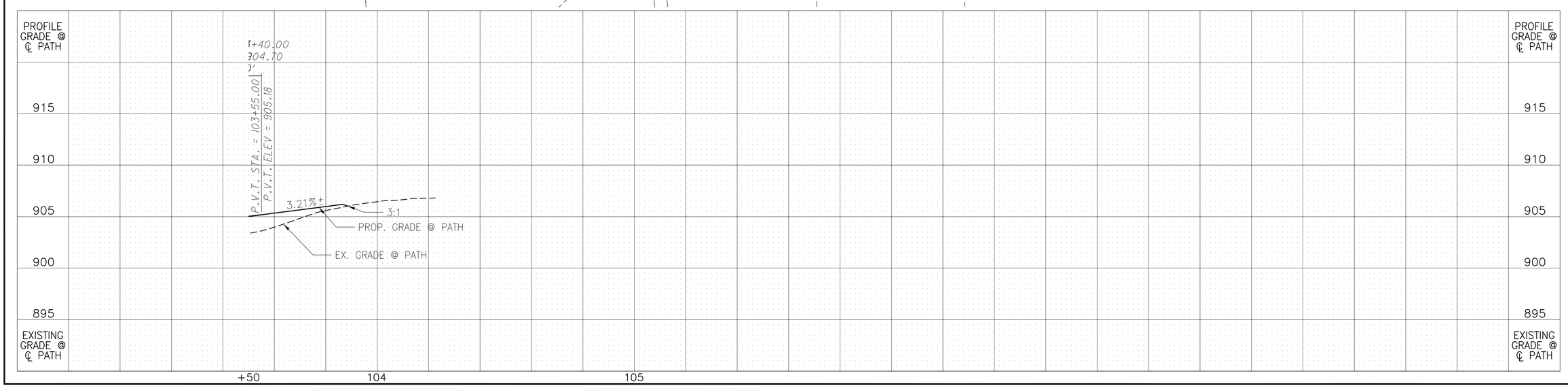

HORIZONTAL SCALE IN FEET 0 10 20 40

CALCULATED EAK
CHECKED FGW

PLAN AND PROFILE - NORTHBOUND SHARED-USE PATH STA. 103+50.00 TO STA. 104+17.00

MUIRFIELD DRIVE / NORTH FORK INDIAN RUN PEDESTRIAN BRIDGES

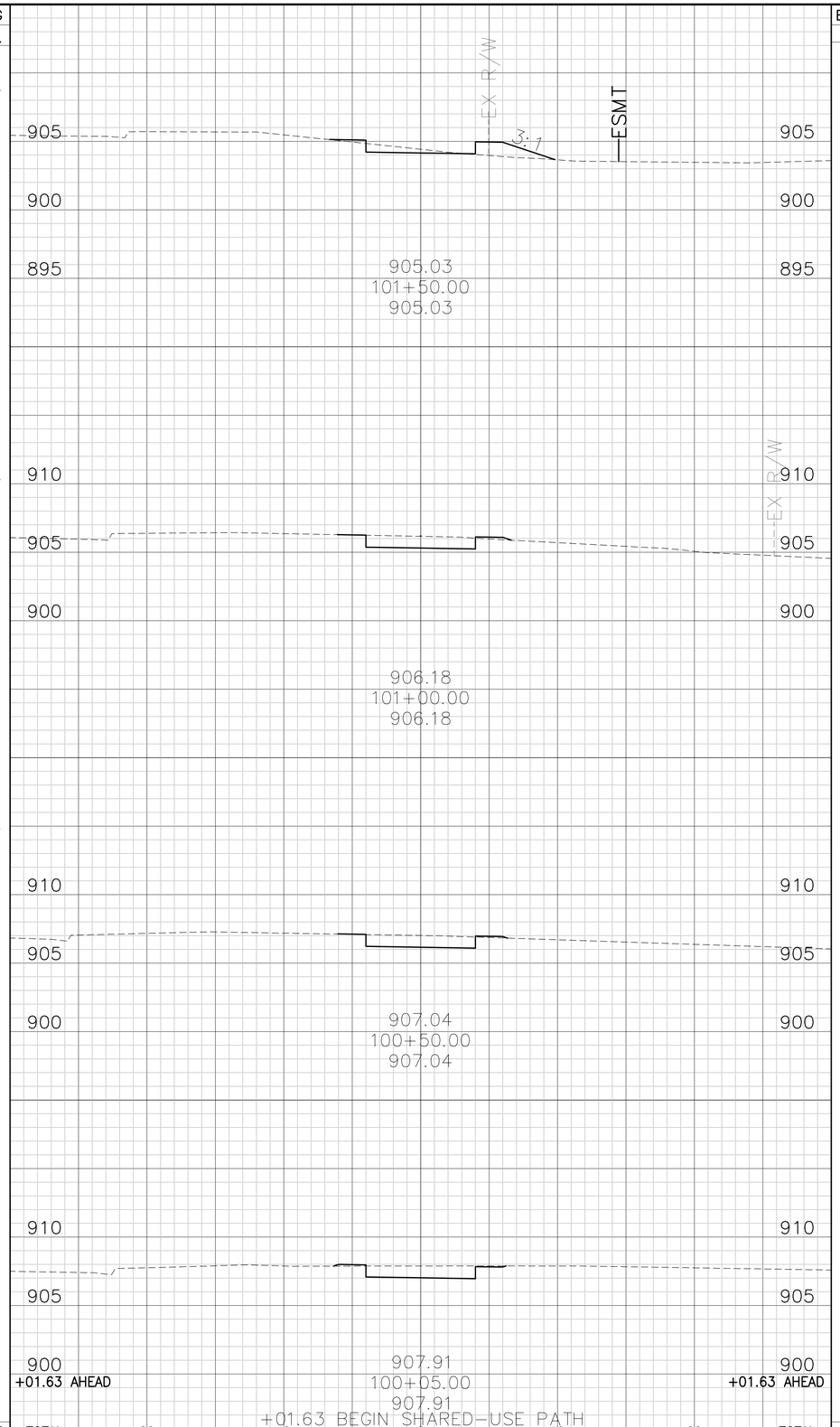

SEEDING END WIDTH	SEEDING SQ. YDS.	END AREA CUT	END AREA FILL	VOLUME CUT	VOLUME FILL
	83			3	30
9		3	4		
	36			9	4
4		7	0		
	22			13	0
4		7	0		
	21			13	0
4		7	0		
	162 TOTAL			38	34

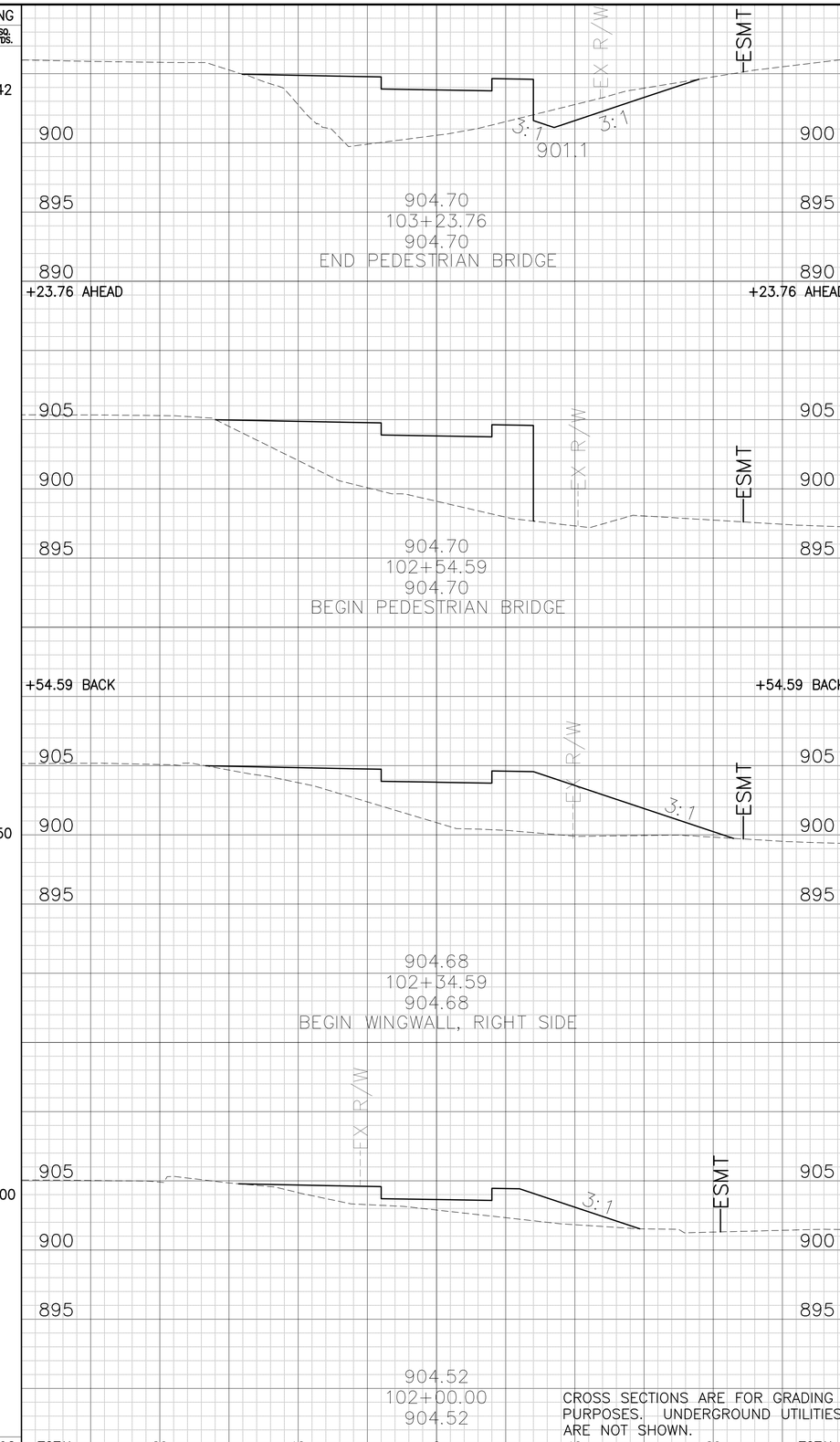

SEEDING END WIDTH	SEEDING SQ. YDS.	END AREA CUT	END AREA FILL	VOLUME CUT	VOLUME FILL
	42			12	25
30		41	63		
14		0	91		
	50			0	64
31		0	82		
	100			0	71
21		0	28		
	192 TOTAL			12	160

CALCULATED FGW
CHECKED PGF

CROSS SECTIONS - NORTHBOUND SHARED-USE PATH
STA. 100+05.00 TO STA. 103+23.76

MUIRFIELD DRIVE / NORTH FORK
INDIAN RUN PEDESTRIAN BRIDGES

SEEDING			END AREA		VOLUME	
END WIDTH	SQ. YDS.		CUT	FILL	CUT	FILL
	22	104+17.00				
6		+86.56 BACK	5	2		
	41				4	10
14			1	12		
	18				1	6
17			1	20		
	81				5	16

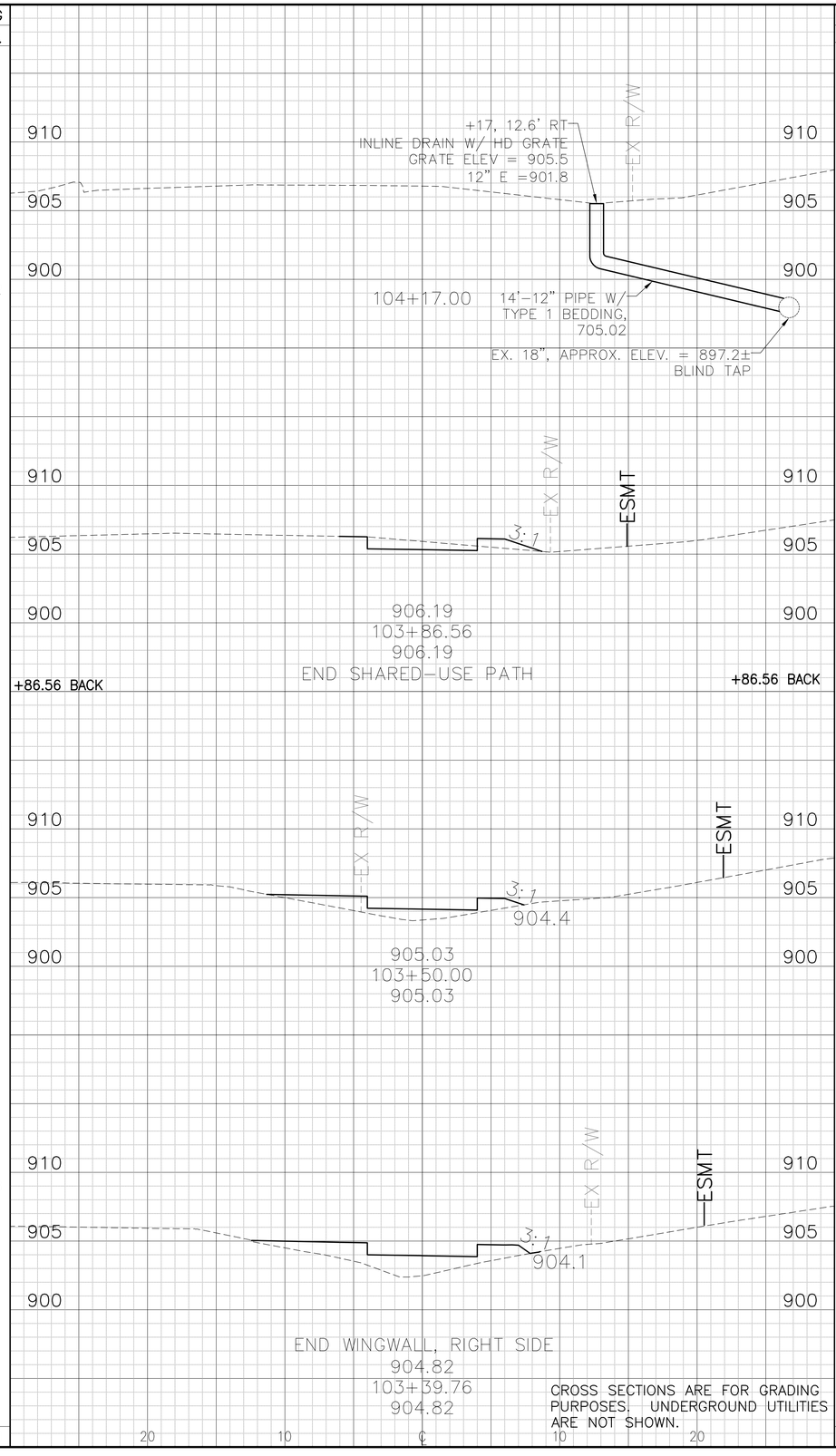

CROSS SECTIONS ARE FOR GRADING PURPOSES. UNDERGROUND UTILITIES ARE NOT SHOWN.

ITEM 203 EXCAVATION	55	CU. YD.
ITEM 203 EMBANKMENT	210	CU. YD.
ITEM 659 SEEDING & MULCHING	435	SQ. YD.

TOTALS CARRIED TO GENERAL SUMMARY

CALCULATED FGW
CHECKED PHF

CROSS SECTIONS - NORTHBOUND SHARED-USE PATH
STA. 103+39.76 TO STA. 104+17.00

MUIRFIELD DRIVE / NORTH FORK
INDIAN RUN PEDESTRIAN BRIDGES

CONTROL POINTS

REF #	℄ C STATION	℄ C OFFSET	NORTHING	EASTING	ELEV.	DESCRIPTION
CP1	4+65.10	31.59' RT.	775940.3664	1787090.3763	905.78	IPINS /CAPPED WESCG #500102
CP2			775455.0293	1786773.9818	910.16	IPINS /CAPPED WESCG #500101

COORDINATES ARE OHIO STATE PLANE SOUTH ZONE

FOR LOCATION OF SHARED-USE PATH, SEE OFFSETS FROM ℄ "C" ON CROSS SECTION SHEETS.

8715 MUIRFIELD DR
THE COUNTRY CLUB AT MUIRFIELD VILLAGE

BENCHMARK:

N39RESET ELEV. = 886.77 (NAVD88)

ALUMINUM DISK SET IN THE TOP OF THE SOUTH END OF THE EAST ABUTMENT OF BRAND ROAD BRIDGE WAS-44-2.09 OVER NORTH FORK INDIAN RUN, 0.20 MILES NORTHWEST OF COFFMAN ROAD.

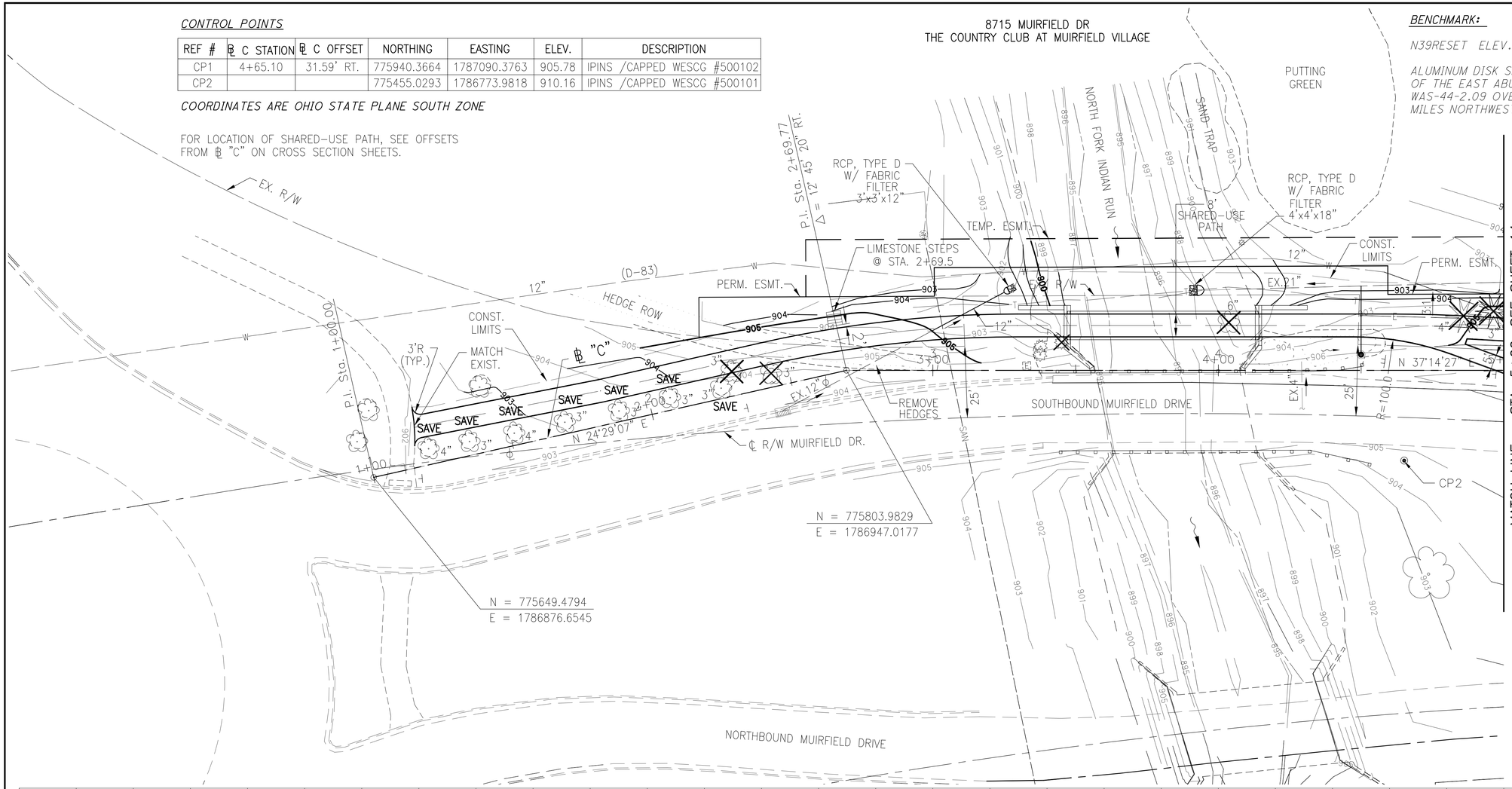

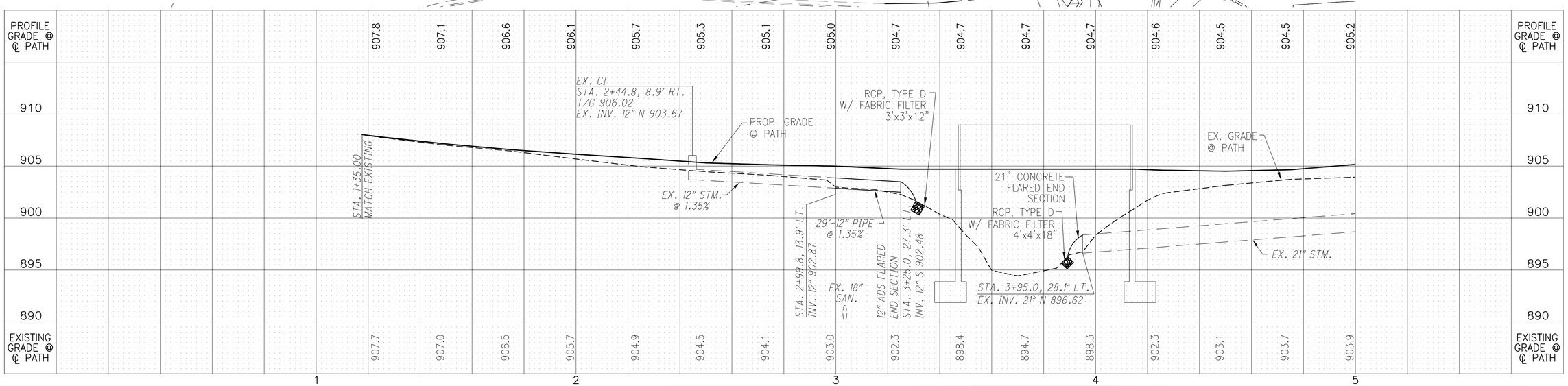

HORIZONTAL SCALE IN FEET 0 10 20 40

CALCULATED LAM
CHECKED KJG

PLAN AND PROFILE - SOUTHBOUND SHARED-USE PATH
℄ "C" STA. 1+00 TO STA. 5+00

MUIRFIELD DRIVE / NORTH FORK INDIAN RUN PEDESTRIAN BRIDGES

FOR LOCATION OF SHARED-USE PATH, SEE OFFSETS FROM ℄ "C" ON CROSS SECTION SHEETS.

8715 MUIRFIELD DR.
THE COUNTRY CLUB AT MUIRFIELD VILLAGE

COORDINATES ARE OHIO STATE PLANE SOUTH ZONE

LEGEND

(SL) STOP LINE, 24"

(PV) ITEM 448 - 1 1/4" ASPHALT CONCRETE SURFACE COURSE TYPE 1, PG64-22, MEDIUM TRAFFIC
ITEM 452 - 8" NON-REINFORCED CONCRETE PAVEMENT

EX. CURB AND GUTTER REMOVED AND DISPOSED OF

CURB RAMP LOCATIONS

℄ AT FACE OF CURB		
ID	NORTHING	EASTING
A	7760434.12	1787121.60
B	776081.57	1787164.63

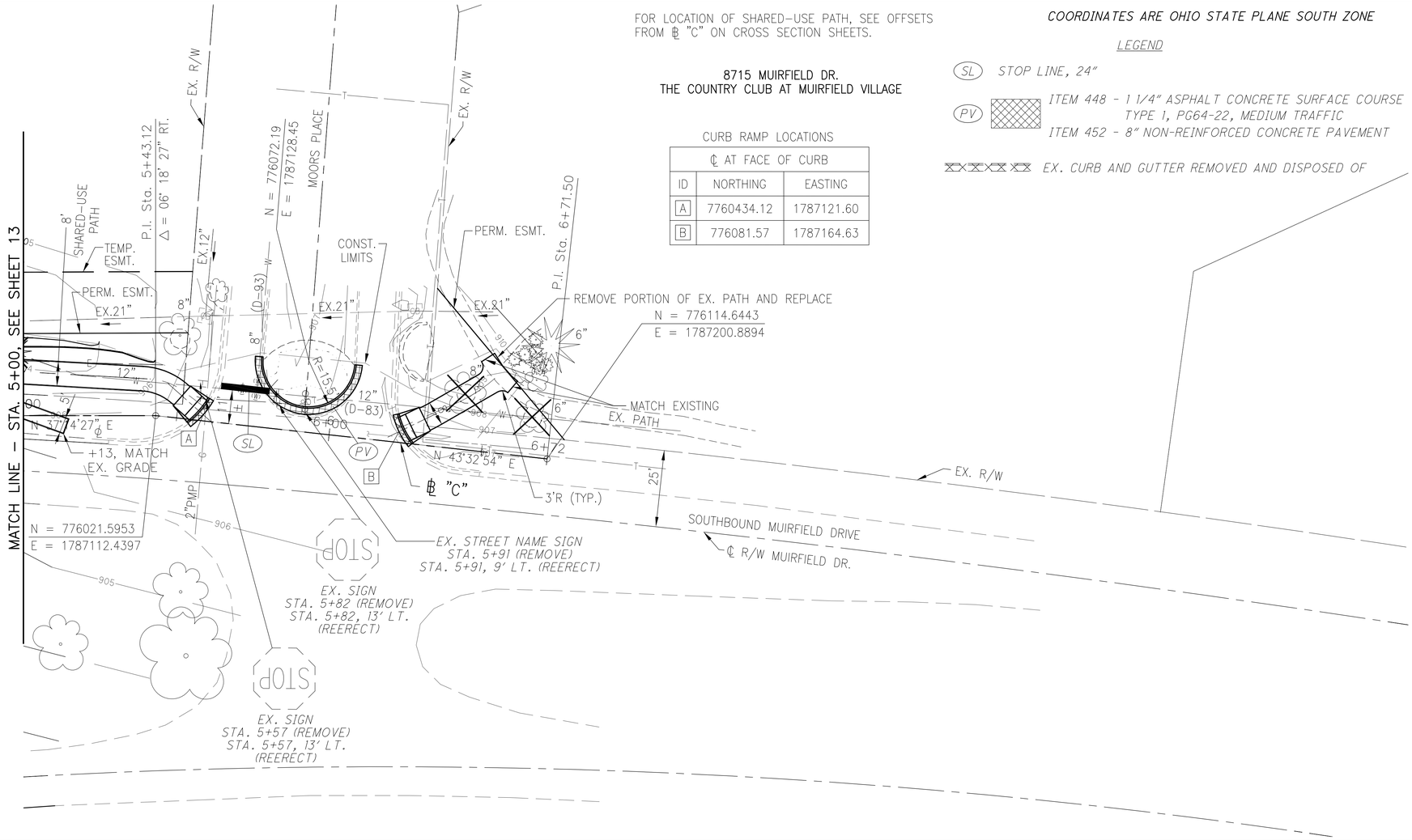

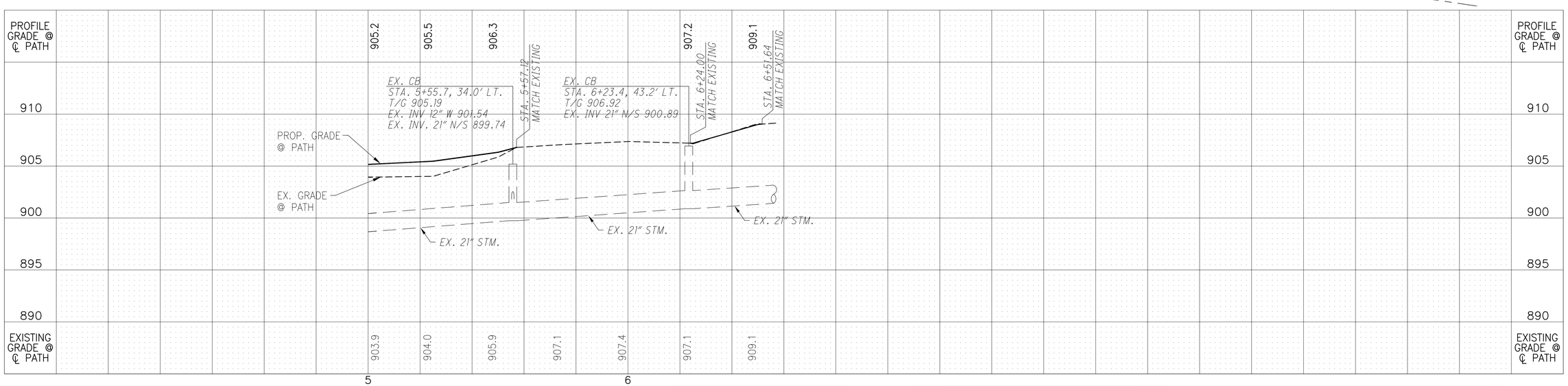

HORIZONTAL SCALE IN FEET 0 10 20 40

CALCULATED LAM
CHECKED KJG

PLAN AND PROFILE - SOUTHBOUND SHARED-USE PATH
℄ "C" STA. 5+00 TO STA. 6+71.50

MUIRFIELD DRIVE / NORTH FORK
INDIAN RUN PEDESTRIAN BRIDGES

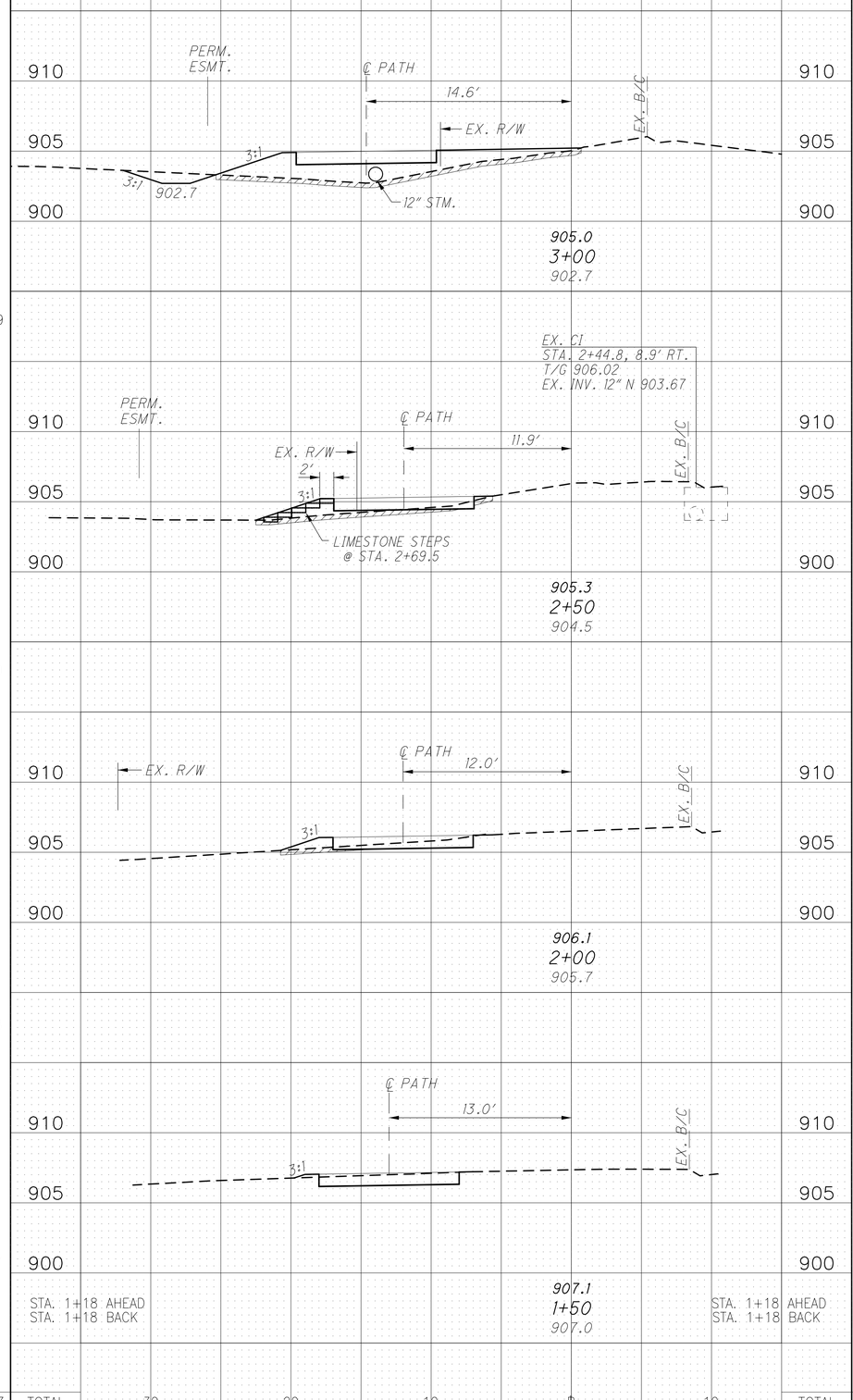

SEEDING END WIDTH	SEEDING SQ. YDS.	END AREA CUT	END AREA FILL	VOLUME CUT	VOLUME FILL
33		12	33		
	139			19	42
17		8	12		
	89			14	16
15		7	5		
	78			14	6
13		8	1		
	47			9	1
13 0		8 0	1 0		
	353 TOTAL			56	65

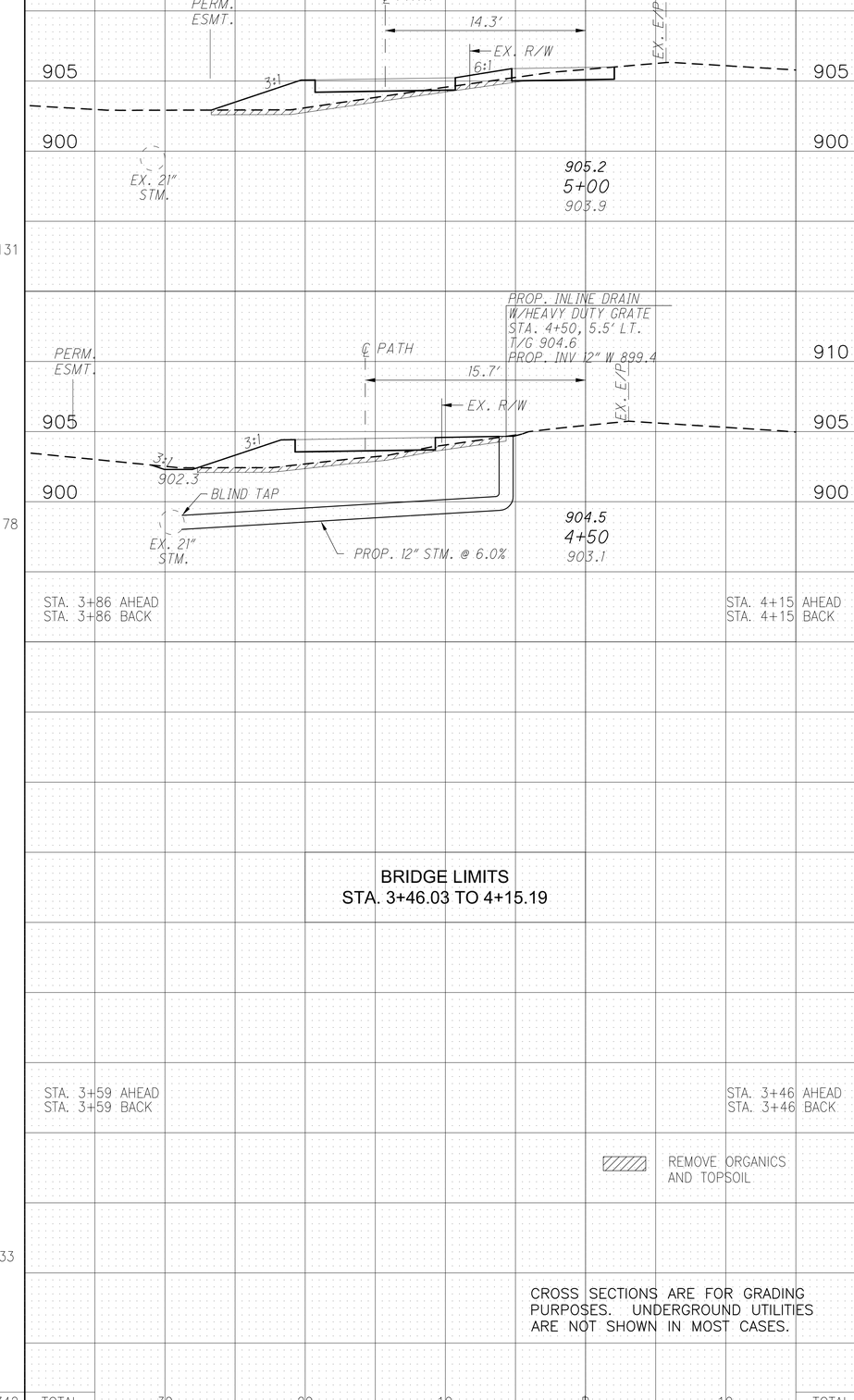

SEEDING END WIDTH	SEEDING SQ. YDS.	END AREA CUT	END AREA FILL	VOLUME CUT	VOLUME FILL
22		7	21		
	131			14	39
25		8	21		
	178			10	27
25 0		8 0	21 0		
0 33		0 12	0 33		
	33			20	56
	342 TOTAL			44	122

CALCULATED LAM
CHECKED KJG

CROSS SECTIONS - SOUTHBOUND SHARED-USE PATH
STA. 1+50 TO STA. 5+00

MUIRFIELD DRIVE / NORTH FORK
INDIAN RUN PEDESTRIAN BRIDGES

SEEDING END WIDTH	SEEDING SQ. YDS.		END AREA CUT	END AREA FILL	VOLUME CUT	VOLUME FILL
0		STA. 6+52 AHEAD / STA. 6+52 BACK	0	0		
12			9	0		
	2				1	0
12			9	0		
	37				9	0
12		STA. 6+23 AHEAD / STA. 6+23 BACK	9	0		
0			0	0		
					0	0
			0	0		
					0	0
0		STA. 5+59 AHEAD / STA. 5+59 BACK	0	0		
17			7	4		
	16				2	1
17			7	4		
	108				13	23
	163	TOTAL			25	24

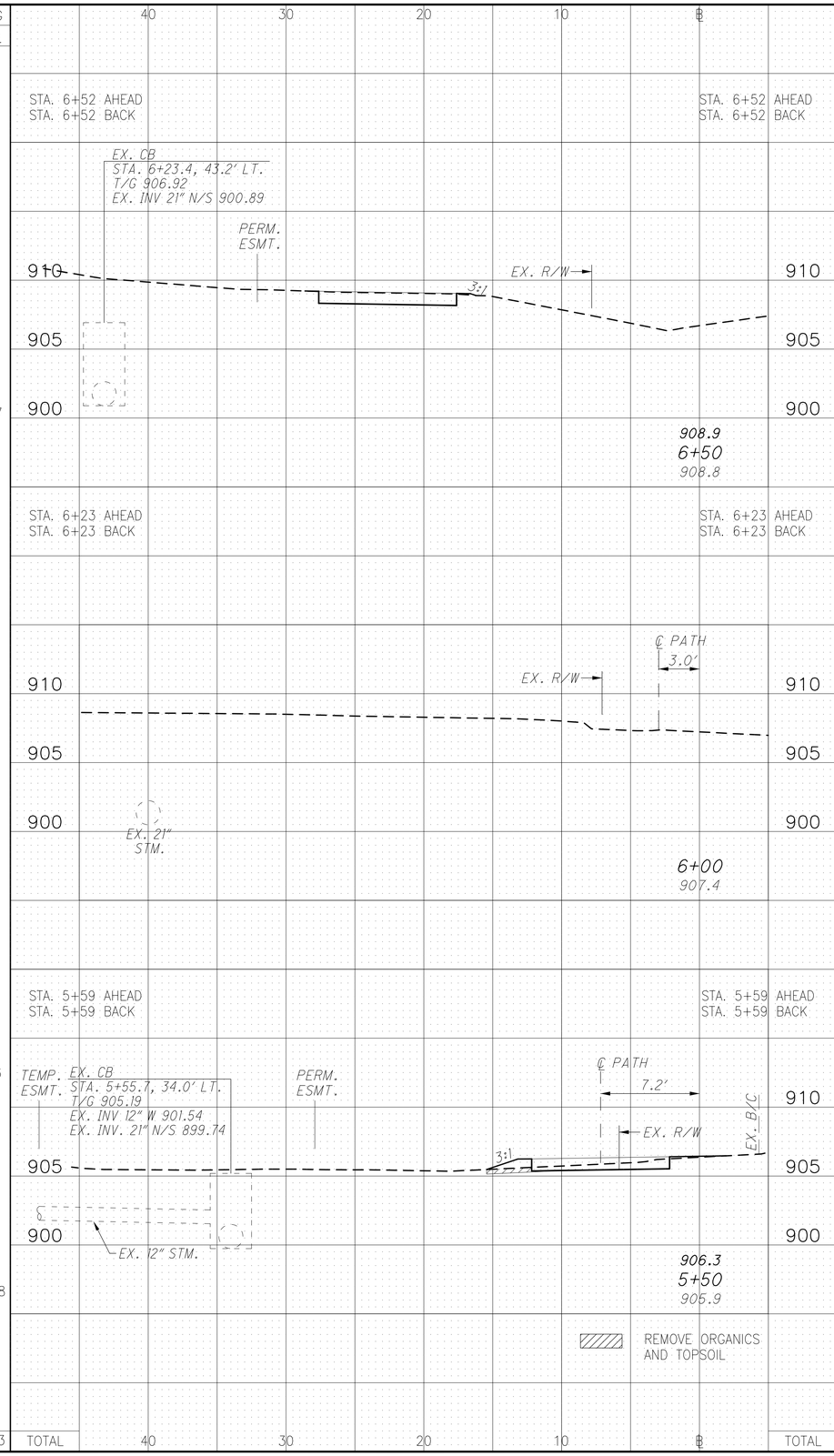

SEEDING END WIDTH	SEEDING SQ. YDS.	END AREA CUT	END AREA FILL	VOLUME CUT	VOLUME FILL

ITEM 203 EXCAVATION 125 CU. YD.
ITEM 203 EMBANKMENT 211 CU. YD.
ITEM 659 SEEDING & MULCHING 858 SQ. YD.

TOTALS CARRIED TO GENERAL SUMMARY

CROSS SECTIONS ARE FOR GRADING PURPOSES. UNDERGROUND UTILITIES ARE NOT SHOWN IN MOST CASES.

TOTAL

CALCULATED LAM
CHECKED KJG

CROSS SECTIONS - SOUTHBOUND SHARED-USE PATH
STA. 5+50 TO STA. 6+50

MUIRFIELD DRIVE / NORTH FORK
INDIAN RUN PEDESTRIAN BRIDGES

DESIGN SPECIFICATIONS:

THIS STRUCTURE CONFORMS TO THE "LRFD BRIDGE DESIGN SPECIFICATIONS" ADOPTED BY THE AMERICAN ASSOCIATION OF STATE HIGHWAY AND TRANSPORTATION OFFICIALS, 2012, INCLUDING ANY INTERIM SPECIFICATIONS AND ODOT BRIDGE DESIGN MANUAL, 2007.

DESIGN LOADING:

DESIGN LOADING: 0.085 KIPS/SQ.FT PEDESTRIAN LOADING AND 8.0 KIP VEHICLE

DESIGN STRESSES:

CAST-IN-PLACE STRUCTURES
CONCRETE CLASS C - COMPRESSIVE STRENGTH 4000 PSI
REINFORCING STEEL - ASTM A615 OR A996 GRADE 60, MINIMUM YIELD STRENGTH 60000 PSI

ITEM 203 EMBANKMENT, AS PER PLAN

PLACE AND COMPACT EMBANKMENT MATERIAL IN 6 INCH LIFTS FOR THE CONSTRUCTION OF THE APPROACH EMBANKMENT.

FOUNDATION BEARING RESISTANCE

SHARED-USE PATH BRIDGE OVER NORTH FORK INDIAN RUN ALONG MUIRFIELD DRIVE:
SPREAD FOOTINGS, AS DESIGNED, PRODUCE A MAXIMUM SERVICE LOAD PRESSURE OF 4.0 KIPS PER SQUARE FOOT AND A MAXIMUM STRENGTH LOAD PRESSURE OF 5.0 KIPS PER SQUARE FOOT. THE FACTORED BEARING RESISTANCE IS 22.0 KIPS PER SQUARE FOOT.

FOOTINGS

FOOTINGS FOR SHARED-USE PATH BRIDGE OVER NORTH FORK INDIAN RUN ALONG MUIRFIELD DRIVE SHALL EXTEND A MINIMUM OF 6 INCHES INTO BEDROCK OR TO THE ELEVATION SHOWN, WHICHEVER IS LOWER.

EXISTING STRUCTURE VERIFICATION

DETAILS AND DIMENSIONS SHOWN ON THESE PLANS PERTAINING TO THE EXISTING STRUCTURES HAVE BEEN OBTAINED FROM PLANS OF THE EXISTING STRUCTURES AND FROM FIELD OBSERVATIONS. CONSEQUENTLY, THEY ARE INDICATIVE OF THE EXISTING STRUCTURES AND THE PROPOSED WORK BUT THEY SHALL BE CONSIDERED TENTATIVE AND APPROXIMATE. THE CONTRACTOR IS REFERRED TO DUBLIN SECTIONS 102.05 AND 105.02.

CONTRACT BID PRICES SHALL BE BASED UPON A RECOGNITION OF THE UNCERTAINTIES DESCRIBED ABOVE AND UPON A PREBID EXAMINATION OF THE EXISTING STRUCTURES BY THE CONTRACTOR. HOWEVER, ALL PROJECT WORK SHALL BE BASED UPON ACTUAL DETAILS AND DIMENSIONS WHICH HAVE BEEN VERIFIED BY THE CONTRACTOR IN THE FIELD.

EXISTING BRIDGE PLANS MAY BE INSPECTED AT THE CITY OF DUBLIN.

DEMOLITION AND CONSTRUCTION: IN REMOVING EXISTING MATERIAL, THE CONTRACTOR SHALL EXERCISE CARE TO PREVENT DAMAGE TO THOSE PARTS OF THE STRUCTURES WHICH ARE TO REMAIN IN PLACE. ANY PORTION OF THE STRUCTURES DAMAGED DURING DEMOLITION AND CONSTRUCTION BY THE CONTRACTOR'S OPERATIONS SHALL BE REPAIRED OR REPLACED BY THE CONTRACTOR AT HIS OWN EXPENSE AND TO THE SATISFACTION OF THE ENGINEER.

ITEM 202, PORTIONS OF STRUCTURE REMOVED, AS PER PLAN
(MUIRFIELD DRIVE BRIDGE)

DESCRIPTION: THIS WORK CONSISTS OF THE REMOVAL OF PORTIONS OF THE SOUTH WINGWALLS OF MUIRFIELD DRIVE BRIDGE. THE PROVISIONS OF ITEM 202 APPLY EXCEPT AS SPECIFIED BY THE FOLLOWING NOTES. PERFORM WORK CAREFULLY DURING REMOVAL TO PROTECT PORTIONS OF SUCH SYSTEMS THAT ARE TO BE SALVAGED/INCORPORATED INTO THE PROPOSED STRUCTURE.

SUBSTRUCTURE CONCRETE REMOVAL: REMOVE CONCRETE BY MEANS OF APPROVED PNEUMATIC HAMMERS EMPLOYING POINTED AND BLUNT CHISEL TOOLS. HYDRAULIC HOE-RAM TYPE HAMMERS WILL NOT BE PERMITTED. THE WEIGHT OF THE HAMMER SHALL NOT BE MORE THAN 35 POUNDS FOR REMOVAL WITHIN 18 INCHES OF PORTIONS TO BE PRESERVED. OUTSIDE THE 18 INCH LIMIT, THE CONTRACTOR MAY USE HAMMERS NOT EXCEEDING 90 POUNDS UPON THE APPROVAL OF THE ENGINEER. DO NOT PLACE PNEUMATIC HAMMERS IN DIRECT CONTACT WITH REINFORCING STEEL THAT IS TO BE RETAINED IN THE REBUILT STRUCTURE.

REPLACE OR REPAIR STRUCTURAL MEMBERS DAMAGED BY THE REMOVAL OPERATIONS AT NO EXTRA COST TO THE PROJECT. AT LEAST 7 DAYS BEFORE PERFORMING REPAIR WORK, SUBMIT A PROPOSED REPAIR PLAN, DEVELOPED BY AN OHIO REGISTERED PROFESSIONAL ENGINEER TO THE ENGINEER. OBTAIN THE ENGINEER'S APPROVAL BEFORE PERFORMING REPAIR.

MEASUREMENT & PAYMENT: THE CITY WILL MEASURE THE QUANTITY OF REMOVALS ON A LUMP SUM BASIS. THE CITY WILL PAY FOR THE ACCEPTED QUANTITIES OF REMOVALS AT THE CONTRACT PRICE FOR ITEM 202, PORTIONS OF STRUCTURE REMOVED, AS PER PLAN.

UTILITIES

SUPPORT AND PROTECTION OF ALL UTILITIES AND APPURTENANCES SHALL BE THE RESPONSIBILITY OF THE CONTRACTOR. COSTS FOR THE REPAIR AND RESTORATION OF EXISTING UTILITIES DAMAGED BY THE CONTRACTOR SHALL BE THE RESPONSIBILITY OF THE CONTRACTOR. COSTS ASSOCIATED WITH THE ABOVE WORK RESPONSIBILITIES SHALL BE INCLUDED IN THE PRICE BID FOR VARIOUS ITEMS.

PRIOR TO EXCAVATION, THE CONTRACTOR SHALL GIVE A 48-HOUR NOTICE TO THE OHIO UTILITIES PROTECTION SERVICE(OUPS) BY CALLING 811. A 48-HOUR NOTICE SHALL BE GIVEN TO THE OWNERS OF UNDERGROUND UTILITIES SHOWN ON THE PLANS WHO ARE NOT MEMBERS OF A REGISTERED UNDERGROUND PROTECTION SERVICE.

CUT LINE CONSTRUCTION JOINT PREPARATION
(MUIRFIELD DRIVE BRIDGE)

SAW CUT BOUNDARIES OF PROPOSED CONCRETE REMOVALS 1/2 INCH DEEP. REMOVE CONCRETE TO A ROUGH SURFACE. LEAVE THE EXISTING REINFORCING STEEL, IF REQUIRED IN THE PLANS, IN PLACE. INSTALL DOWEL BARS IF SPECIFIED. PRIOR TO CONCRETE PLACEMENT, ABRASIVELY CLEAN JOINT SURFACES AND EXISTING EXPOSED REINFORCEMENT TO REMOVE LOOSE AND DISINTEGRATED CONCRETE AND LOOSE RUST. THOROUGHLY CLEAN THE JOINT SURFACE AND EXPOSED REINFORCEMENT OF ALL DIRT, DUST, RUST OR OTHER FOREIGN MATERIAL BY THE USE OF WATER, AIR UNDER PRESSURE, OR OTHER METHODS THAT PRODUCE SATISFACTORY RESULTS. EXISTING REINFORCING STEEL DOES NOT HAVE TO HAVE A BRIGHT STEEL FINISH, BUT REMOVAL ALL PACK AND LOOSE RUST. THOROUGHLY DRENCH EXISTING CONCRETE SURFACES WITH CLEAN WATER AND ALLOW TO DRY TO A DAMP CONDITION BEFORE PLACING CONCRETE.

ITEM 503 - COFFERDAM AND EXCAVATION BRACING, AS PER PLAN

TEMPORARY SHORING SHALL BE REMOVED AFTER COMPLETION OF WORK.

ITEM 509 - REINFORCING STEEL, REPLACEMENT OF EXISTING REINFORCING STEEL, AS PER PLAN
(MUIRFIELD DRIVE BRIDGE)

ANY EXISTING REINFORCING BARS DEEMED BY THE ENGINEER TO BE UNUSABLE BECAUSE OF CORROSION SHALL BE REPLACED WITH NEW EPOXY COATED REINFORCING STEEL. ANY EXISTING REINFORCING BARS WHICH ARE TO BE INCORPORATED INTO THE NEW WORK AND ARE MADE UNUSABLE BY CONCRETE REMOVAL OPERATIONS SHALL BE REPLACED WITH NEW EPOXY COATED REINFORCING STEEL OF THE SAME SIZE AT THE CONTRACTOR'S COST. ALL WORK SHALL BE TO THE SATISFACTION OF THE ENGINEER.

A CONTINGENCY QUANTITY OF 200 POUNDS OF REINFORCING STEEL IS INCLUDED UNDER ITEM 509 - REINFORCING STEEL. REPLACEMENT OF EXISTING REINFORCING STEEL, AS PER PLAN, TO BE USED AS DIRECTED BY THE ENGINEER.

THE NUMBER OF POUNDS OF REINFORCING STEEL PAID FOR AT THE CONTRACT UNIT PRICE SHALL BE THE ACTUAL POUNDS OF REPLACEMENT REINFORCING STEEL SPECIFIED BY THE ENGINEER DUE TO CORROSION, AND SHALL INCLUDE PLACEMENT, DOWELING, BENDING, SUPPORTING, TIE WIRES AND TYING OF THAT SPECIFIED REINFORCING STEEL.

ITEM 511 - CLASS C CONCRETE FOOTING, AS PER PLAN
ITEM 511 - CLASS C CONCRETE, WINGWALL ABOVE FOOTING, AS PER PLAN
ITEM 511 - CLASS C CONCRETE, ABUTMENT ABOVE FOOTING, AS PER PLAN

USE EPOXY COATED REINFORCING STEEL, 60 KSI MINIMUM YIELD STRENGTH, CONFORMING TO SPECIFICATION SECTION 509. SUBMIT SHOP DRAWINGS FOR THE FABRICATION, BENDING, AND PLACEMENT OF REINFORCING STEEL BARS, INCLUDING BAR SCHEDULES, AT LEAST 7 DAYS PRIOR TO FABRICATION, FOR THE ENGINEER'S APPROVAL.

ALL STEEL REINFORCEMENT IN CONCRETE SHALL BE CONSIDERED INCIDENTAL TO THE CONCRETE. PAYMENT SHALL BE INCLUDED IN THE UNIT PRICE FOR THE CONCRETE.

CONCRETE FINISHING

CHAMFER EXPOSED CONCRETE EDGES ¾" BY ¾" UNLESS DIRECTED OTHERWISE BY THE ENGINEER.

ITEM 512 - SEALING OF CONCRETE SURFACES, AS PER PLAN
(EPOXY-URETHANE)

SEALING OF CONCRETE SURFACES, AS DELINEATED, FOR THE SHARED-USE PATH BRIDGE OVER NORTH FORK INDIAN RUN ALONG MUIRFIELD DRIVE SHALL BE MATCHED TO THE EXISTING ADJACENT MUIRFIELD DRIVE BRIDGE.

ITEM 518 - 6" NON-PERFORATED CORRUGATED PIPE, INCLUDING SPECIALS, 720.08, AS PER PLAN

IN ADDITIONS TO THE PIPE AND ALL SPECIALS, THE COST OF THE PRECAST REINFORCED CONCRETE OUTLET SHALL BE INCLUDED IN THE UNIT COST FOR ITEM 518 - 6" NON-PERFORATED CORRUGATED PIPE, INCLUDING SPECIALS,720.08, AS PER PLAN. THE PRECAST REINFORCED CONCRETE OUTLET SHALL BE IN ACCORDANCE WITH ODOT STANDARD DRAWING DM-1.1 (REVISED 1-18-13).

ABBREVIATIONS:

℄	BASELINE
℄	CENTERLINE
APPROX.	APPROXIMATELY
B.F.	BACK FACE
BOTT.	BOTTOM
C.P.P.	CORRUGATED PLASTIC PIPE
C.I.P.	CAST IN PLACE
C.J.	CONSTRUCTION JOINT
CLR.	CLEAR
DIA.	DIAMETER
E.F.	EACH FACE
EL.	ELEVATION
E.P.	EDGE OF PAVEMENT
EQ.	EQUAL
EX.	EXISTING
EXIST.	EXISTING
F.A.	FORWARD ABUTMENT
F.F.	FRONT FACE
FL	FLOW LINE
INV.	INVERT
LT.	LEFT
MAX.	MAXIMUM
MIN.	MINIMUM
N.F.I.R	NORTH FORK INDIAN RUN
OFF.	OFFSET
P.E.J.F.	PREFORMED EXPANSION JOINT FILLER
P.F.	PROFILE GRADE
PROP.	PROPOSED
R.A.	REAR ABUTMENT
R.F.	REAR FACE
RT.	RIGHT
SPA.	SPACE
S.O.	SERIES OF
STA.	STATION
STR.	STRAIGHT
TEMP.	TEMPORARY
T.O.W.	TOP OF WALL
TYP.	TYPICAL
U.N.O.	UNLESS NOTED OTHERWISE
W/	WITH

ENGINEERS SEAL FOR BRIDGES:

STATE OF OHIO
DAVID ROBERT CUNNINGHAM II
73978
REGISTERED
PROFESSIONAL ENGINEER

SIGNED:
DATE: MAY 21, 2014

DESIGN AGENCY
URS
AKRON CLEVELAND COLUMBUS
277 WEST NATIONWIDE BOULEVARD
COLUMBUS, OH 43215-2566
(614) 464-4500

DESIGNED	DRAWN	REVIEWED	DATE
DRC	BAD	RWB	02/2014
CHECKED	REVISED	STRUCTURE FILE NUMBER	
RWB		N/A	

GENERAL NOTES

MUIRFIELD DRIVE/NORTH FORK INDIAN RUN PEDESTRIAN BRIDGES
ALONG MUIRFIELD DRIVE (NORTHBOUND LANES)

MUIRFIELD DRIVE
SHARED USE PATH

File Name: L:\Projects\14578434\TRANSFRA\08434\structures\08434GN001.dwg - Structure Notes
Modified / By: May 21, 2014 2:16:37 PM / beth_dollboa
Plotted / By: May 21, 2014 2:17:06 PM / Dollboa, Beth

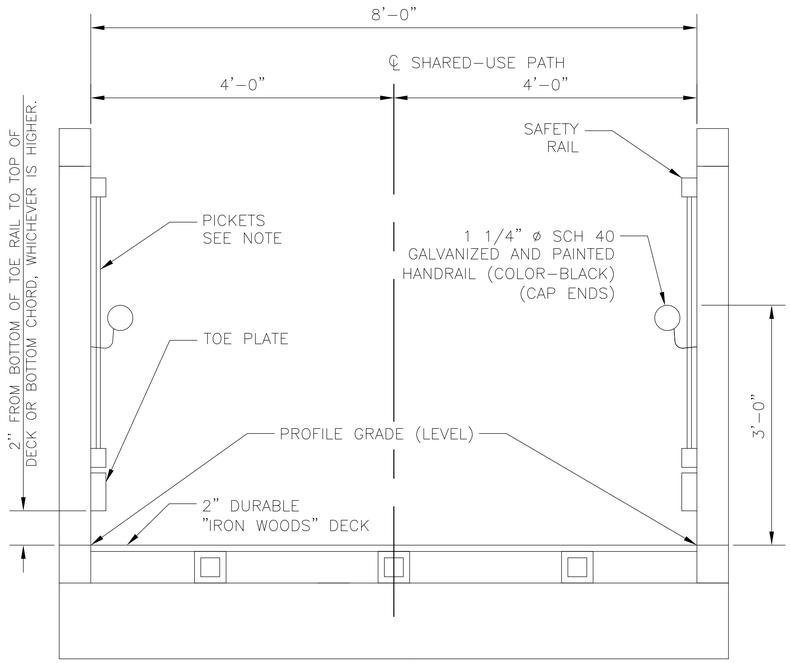

TRANSVERSE SECTION

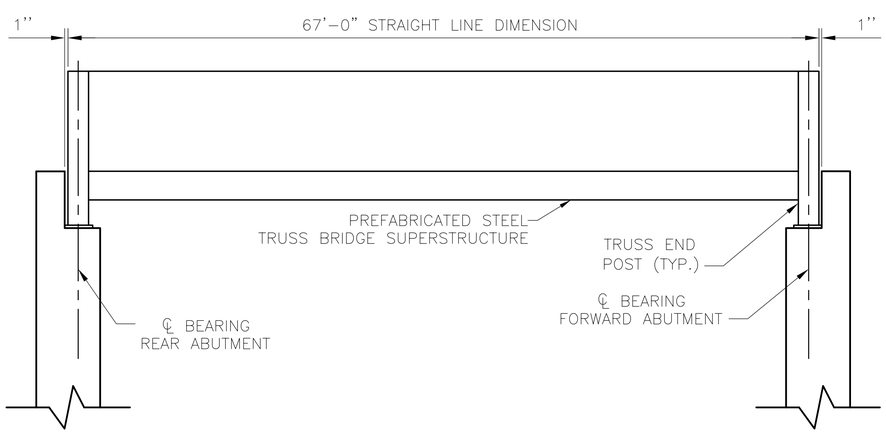

ELEVATION

NOT TO SCALE

SUB-SUMMARY				
ITEM	TOTAL	UNIT	DESCRIPTION	REF. SHEET
202	1	LUMP	PORTIONS OF STRUCTURES REMOVED, AS PER PLAN	1/8
503	1	LUMP	COFFERDAMS AND EXCAVATION BRACING, AS PER PLAN	1/8
503	1	LUMP	UNCLASSIFIED EXCAVATION	
511	73	CU YD	CLASS C CONCRETE, FOOTING, AS PER PLAN	1/8
511	34	CU YD	CLASS C CONCRETE, WINGWALL ABOVE FOOTING, AS PER PLAN	1/8
511	24	CU YD	CLASS C CONCRETE, ABUTMENT ABOVE FOOTING, AS PER PLAN	1/8
512	8	SQ YD	TYPE 2 WATERPROOFING MEMBRANE	
512	69	SQ YD	SEALING CONCRETE SURFACES (EPOXY-URETHANE), AS PER PLAN	1/8
516	34	SQ FT	1" PREFORMED EXPANSION JOINT FILLER	
518	44	CU YD	POROUS BACKFILL WITH FILTER FABRIC	
518	73	FT	6" PERFORATED CORRUGATED PIPE, INCLUDING SPECIALS, 720.12	
518	40	FT	6" NON-PERFORATED CORRUGATED PIPE, INCLUDING SPECIALS, 720.08, AS PER PLAN	1/8
519	17	CU FT	SPECIAL-PATCHING CONCRETE STRUCTURE, MISC.; MUIRFIELD DRIVE WINGWALL	4/8
SPECIAL	61	FT	RAILING (42" HIGH METAL RAILING)	
SPECIAL	1	LUMP	ITEM SPECIAL-STRUCTURE MISC.: 67' PRE-ENGINEERED HALF THROUGH TRUSS	2/8
			PEDESTRIAN BRIDGE, H TRUSS DESIGN	

NOTES:

1. THE FOLLOWING BRIDGE MANUFACTURERS ARE QUALIFIED SUPPLIERS
   - CONTINENTAL BRIDGE
   - WHEELER BRIDGE
   - STEADFAST BRIDGES
   - BIG R BRIDGE
   - ECHO BRIDGE
   - EXCEL BRIDGE
   - PIONEER BRIDGE

2. THE BRIDGE SHALL HAVE PICKETS, SPACED TO GIVE A 4" GAP. BRIDGES SHALL MEET REQUIREMENTS LISTED IN SPECIAL SPECIFICATIONS OF THE CONTRACT DOCUMENT.

3. BRIDGE SHALL BE H-TRUSS DESIGN.

4. CHAMFER EXPOSED CONCRETE SURFACES ¾" UNLESS SHOWN OTHERWISE

DESIGN AGENCY
URS
AKRON CLEVELAND COLUMBUS
277 WEST NATIONWIDE BOULEVARD
COLUMBUS, OH 43215-2566
(614) 464-4500

DESIGNED	DRAWN	REVIEWED	DATE
DRC	BAD	RWB	02/2014
CHECKED	REVISED	STRUCTURE FILE NUMBER	
RWB		N/A	

GENERAL NOTES

MUIRFIELD DRIVE/NORTH FORK INDIAN RUN PEDESTRIAN BRIDGES
ALONG MUIRFIELD DRIVE (NORTHBOUND LANE)

MUIRFIELD DRIVE
SHARED USE PATH

File Name: L:\Projects\14578434\TRANSIFRA\08434\structures\08434GN001.dwg - Structure Notes2
Modified / By: May 21, 2014 2:16:37 PM / beth_doliboa
Plotted / By: May 21, 2014 2:18:57 PM / Doliboa, Beth

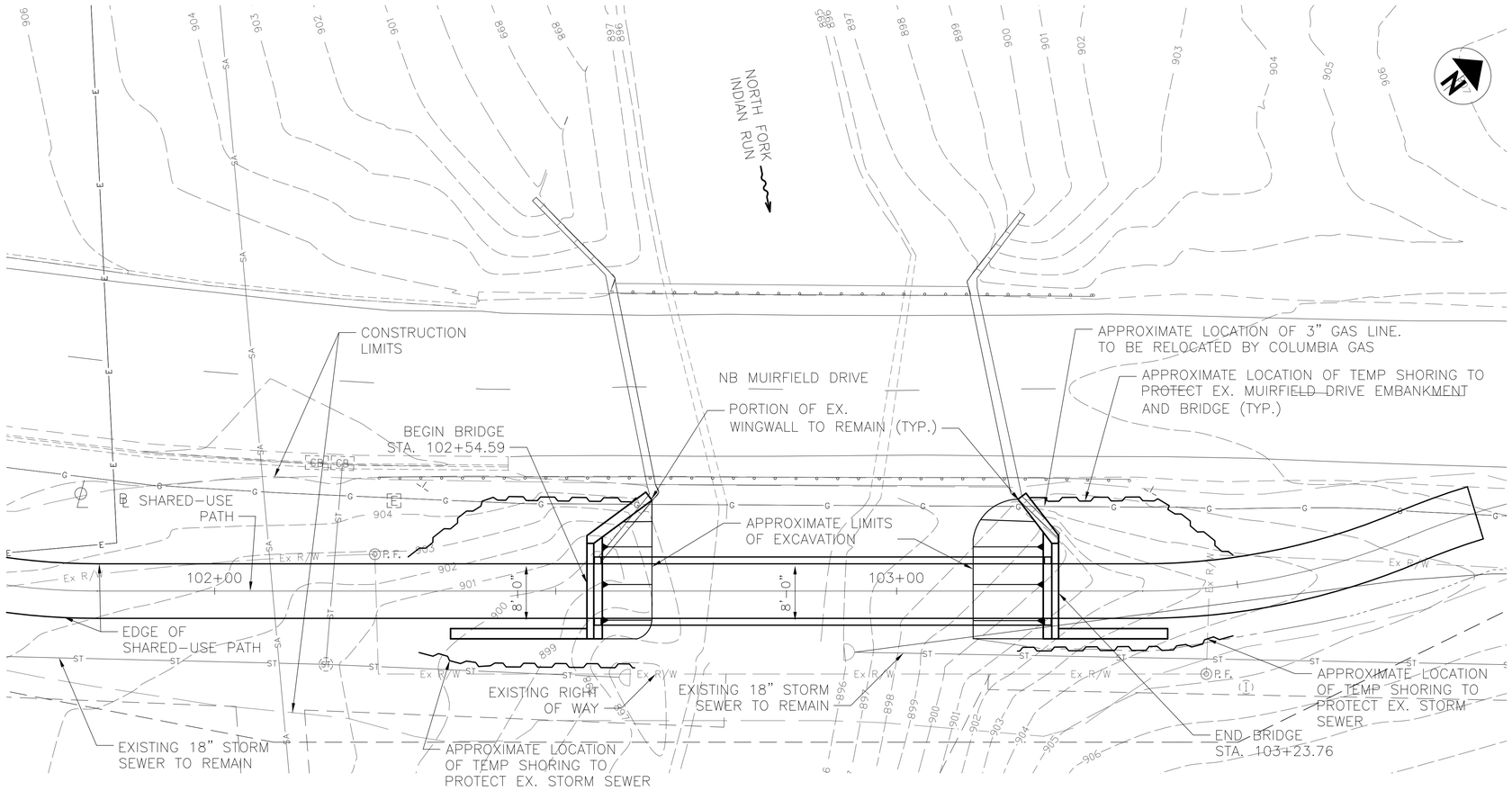

PLAN

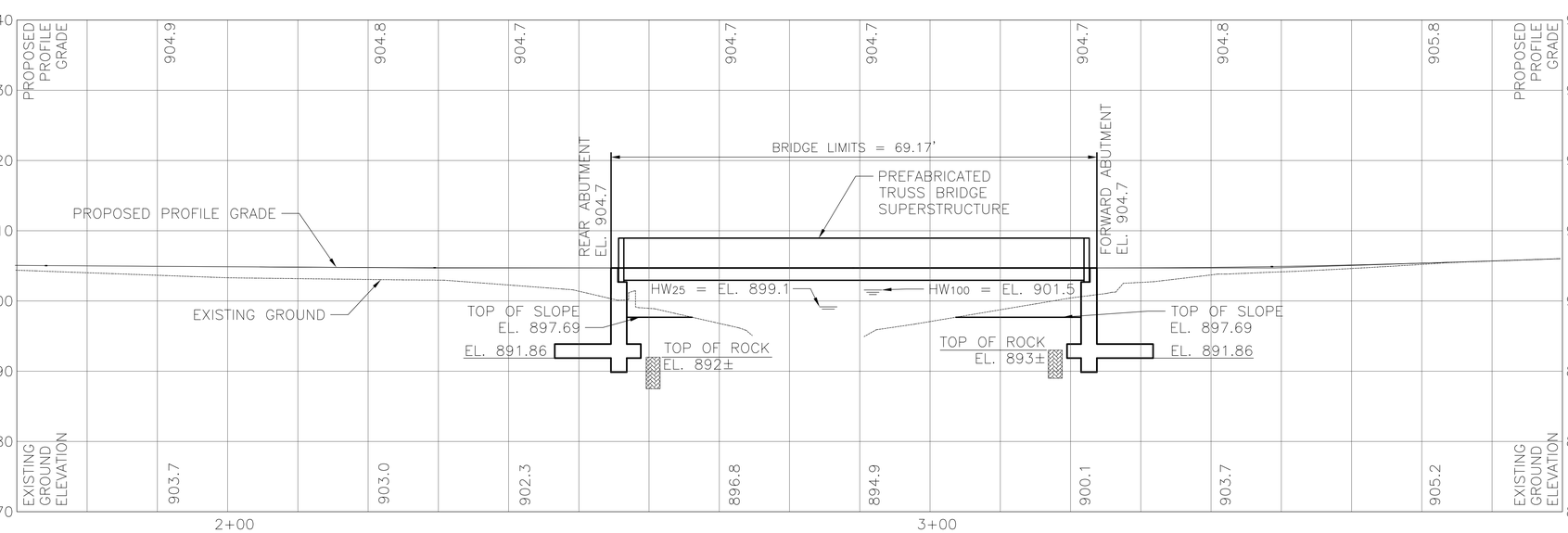

PROFILE ALONG ℄ SHARED USED PATH

BENCHMARK DATA		
BM #1 STA.103+50.87	ELEV. 905.78	OFFSET 117.21 LT.

NOTES

EARTHWORK LIMITS SHOWN ARE APPROXIMATE. ACTUAL SLOPES SHALL CONFORM TO PLAN CROSS SECTIONS.

0 10 20

SCALE: 1" = 10'

HYDRAULIC DATA (Q'S PROVIDED BY CDM MODEL FROM THE CITY OF DUBLIN)

DRAINAGE AREA = 8.4 SQ. MILES
Q (25) = 426 CFS V (25) = 3.15 FT/S
Q (100) = 1070 CFS V (100) = 4.12 FT/S
STRUCTURE CLEARS THE 100 YEAR DESIGN HW BY 1.45 FEET.

PROPOSED STRUCTURE

TYPE: SINGLE SPAN PREFABRICATED STEEL TRUSS SUPERSTRUCTURE SUPPORTED ON REINFORCED CONCRETE ABUTMENTS

SPANS: 67'-0" OUT-TO-OUT BRIDGE TRUSS
ROADWAY: 8'-0" FACE/FACE TRUSS
LOADING: 85 PSF (PEDESTRIAN LOAD) AND 8 KIP VEHICLE
SKEW: 0° 00' 00"
APPROACH SLABS: NONE
ALIGNMENT: TANGENT
CROWN: LEVEL
COORDINATES: LATITUDE 40° 07' 41" N
LONGITUDE 83° 08' 55" W

DESIGN AGENCY
URS
AKRON CLEVELAND COLUMBUS
277 WEST NATIONWIDE BOULEVARD
COLUMBUS, OH 43215-2566
(614) 464-4500

DRAWN	REVIEWED	DATE
BAD	RWB	02/2014
DESIGNED	REVISED	STRUCTURE FILE NUMBER
DRC		N/A
CHECKED		
RWB		

FRANKLIN COUNTY
STA. 102+54.59
STA. 103+23.76

SITE PLAN
MUIRFIELD DRIVE/NORTH FORK INDIAN RUN PEDESTRIAN BRIDGES
ALONG MUIRFIELD DRIVE (NORTHBOUND LANES)

MUIRFIELD DRIVE
SHARED USE PATH

File Name: L:\Projects\14578434\TRANSFRA\08434\structures\08434SP001.dwg - Sheet
Modified / By: May 21, 2014 2:27:56 PM / beth_dolibca
Plotted / By: May 22, 2014 9:27:15 AM / Dolibca, Beth

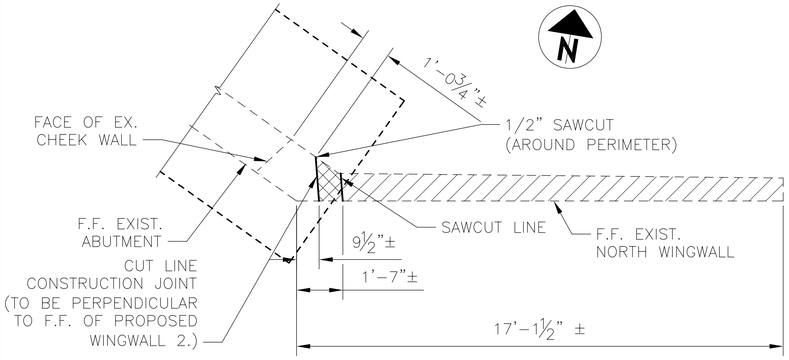

PLAN
FORWARD ABUTMENT

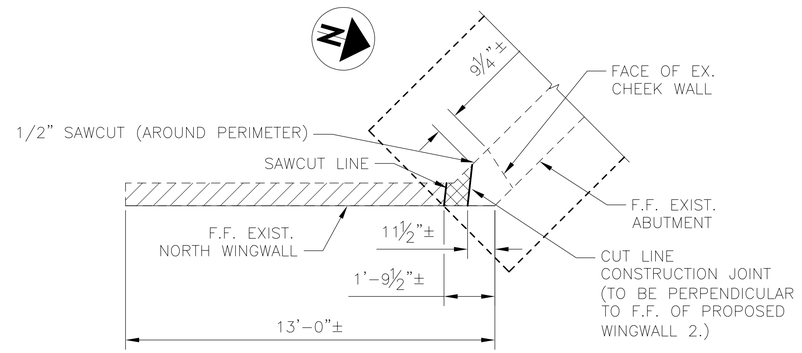

PLAN
REAR ABUTMENT

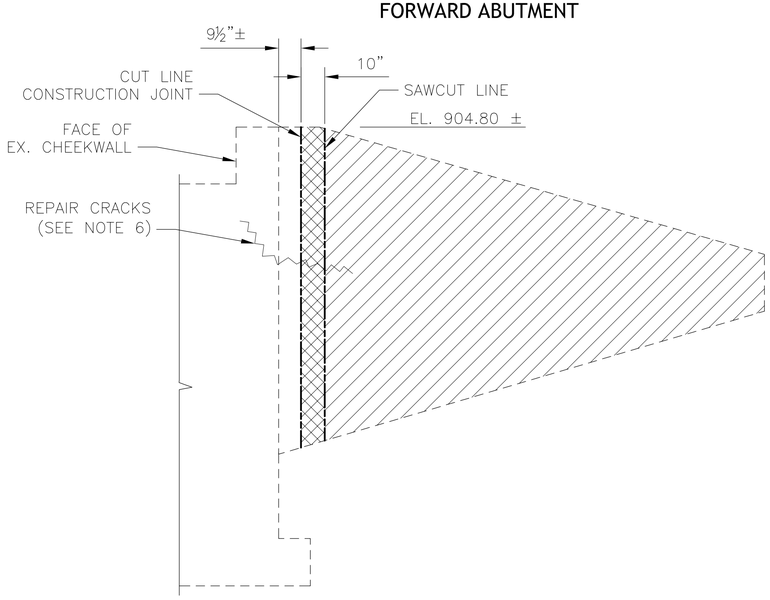

ELEVATION
FORWARD ABUTMENT

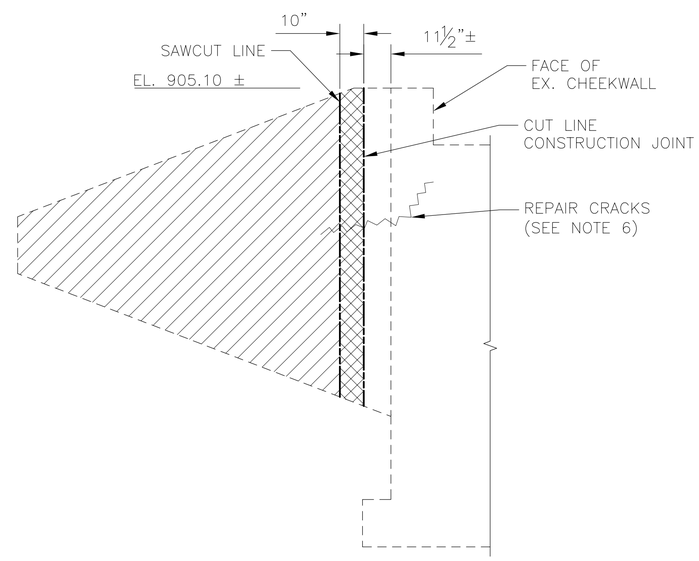

ELEVATION
REAR ABUTMENT

NOTES:

1. SEE SHEETS 1/10 & 2/10 FOR GENERAL NOTES AND ESTIMATED QUANTITIES.
2. EXISTING DIMENSIONS AND ELEVATIONS ARE OBTAINED FROM EXISTING DRAWINGS AND SURVEY. CONTRACTOR SHALL VERIFY DIMENSIONS AND ELEVATIONS IN THE FIELD.
3. EXISTING HORIZONTAL REINFORCEMENT IN WINGWALL SHALL BE CUT AT THE SAWCUT LINES. EXISTING HORIZONTAL REINFORCEMENT SHALL REMAIN WITHIN THE LIMITS OF REMOVAL WITH HAND TOOLS AND SHALL BE BENT TO FIT INSIDE THE 6" CONCRETE REPAIR AS SHOWN ON THIS SHEET TO MAINTAIN A 2" COVER.

   IF EXISTING REINFORCEMENT DOES NOT PROTRUDE FROM CONSTRUCTION JOINT INTO THE PROPOSED CONCRETE REPAIR, CONTRACTOR SHALL PROVIDE HORIZONTAL BARS AT EACH FACE AT 1'-0" MAX SPACING. REINFORCEMENT SHALL BE EMBEDDED 8" INTO HORIZONTAL DOWEL HOLES IN THE REMAINING EXISTING CONCRETE AND SHALL HAVE A 90° STANDARD HOOK IN THE REPAIR CONCRETE. DOWEL HOLES AND REINFORCEMENT TO BE APPROVED BY THE ENGINEER.
4. REPAIR CONCRETE MIX SHALL BE SIKACRETE 211 SCC PLUS OR EQUAL. APPLY A BONDING AGENT TO THE SURFACE OF THE EXISTING CONCRETE TO COME IN CONTACT WITH NEW CONCRETE. BONDING AGENT SHALL BE SIKA ARMATEC 110 EPOCEM OR EQUAL. CONCRETE MIX & BONDING AGENT SHALL BE COMPATIBLE AND PRODUCED BY THE SAME MANUFACTURER. APPLY BONDING AGENT AND PERFORM CONCRETE REPAIR IN ACCORDANCE WITH THE MANUFACTURER'S RECOMMENDATION.

   PRE-APPROVED MANUFACTURER:
   SIKA CORPORATION
   201 POLITO AVENUE
   LYNDHURST, NJ 07071
   PHONE: 800-933-7452

   ALL MATERIAL AND WORK ASSOCIATED WITH THE CONCRETE REPAIR SHALL BE INCIDENTAL TO ITEM 519-SPECIAL-PATCHING CONCRETE STRUCTURE, MISC.: MUIRFIELD DRIVE WINGWALL.
5. EXPANSION JOINT MATERIAL SHALL CONFORM TO ASTM D1752, TYPE 1 (RECYCLED RUBBER EXPANSION MATERIAL). FIBROUS TYPE EXPANSION MATERIAL SHALL NOT BE USED.
6. REPAIR CRACKS IN ABUTMENT FACE ADJACENT TO WINGWALL REMOVAL AND IN PORTION OF WINGWALL TO REMAIN ACCORDING TO ITEM 512 SEALING CRACKS BY EPOXY INJECTION.

EXISTING MUIRFIELD DRIVE BRIDGE REMOVAL DETAILS

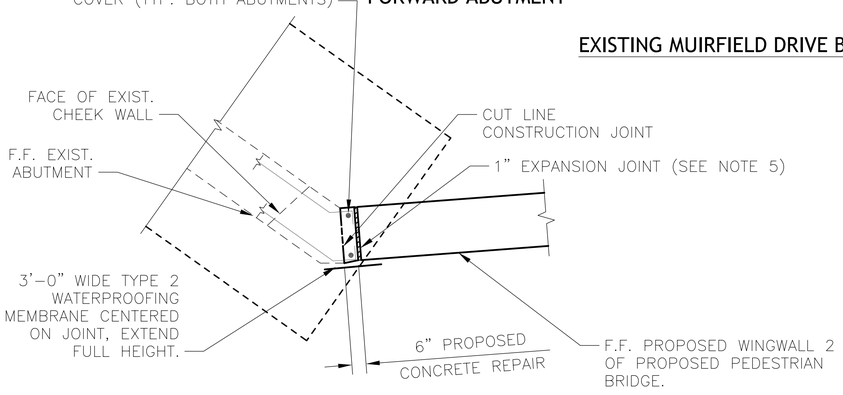

PROPOSED ABUTMENT REHAB PLAN
FORWARD ABUTMENT

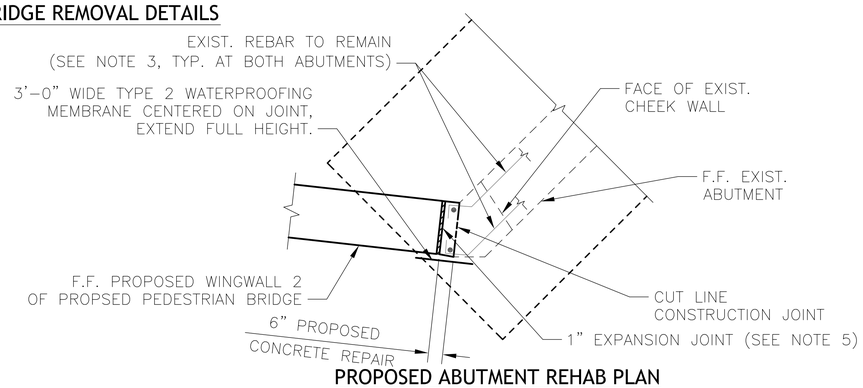

PROPOSED ABUTMENT REHAB PLAN
REAR ABUTMENT

LEGEND:

REMOVAL

REMOVAL WITH HAND TOOLS

DESIGN AGENCY
URS
AKRON CLEVELAND COLUMBUS
277 WEST NATIONWIDE BOULEVARD
COLUMBUS, OH 43215-2566
(614) 464-4500

DESIGNED	DRAWN	REVIEWED	DATE
DRC	BAD	RWB	02/2014
CHECKED	REVISED	STRUCTURE FILE NUMBER	
RWB		N/A	

REMOVAL AND REPAIR DETAILS
MUIRFIELD DRIVE/NORTH FORK INDIAN RUN PEDESTRIAN BRIDGES
ALONG MUIRFIELD DRIVE (NORTHBOUND LANES)

MUIRFIELD DRIVE SHARED USE PATH

4 / 8

19 / 31

File Name: L:\Projects\14578434\TRANSIFRA\08434\structures\08434RE002.dwg - Removal Details
Modified / By: May 7, 2014 10:28:40 AM / beth_dolibca
Plotted / By: May 7, 2014 10:35:11 AM / Dolibca, Beth

NOTES:

1. SEE SHEET 1/8 & 2/8 FOR GENERAL NOTES AND ESTIMATED QUANTITIES.
2. SEE SHEET 7/8 FOR SECTION B–B, C–C AND D–D.
3. SEE SHEET 7/8 FOR WINGWALL 2 DETAILS.

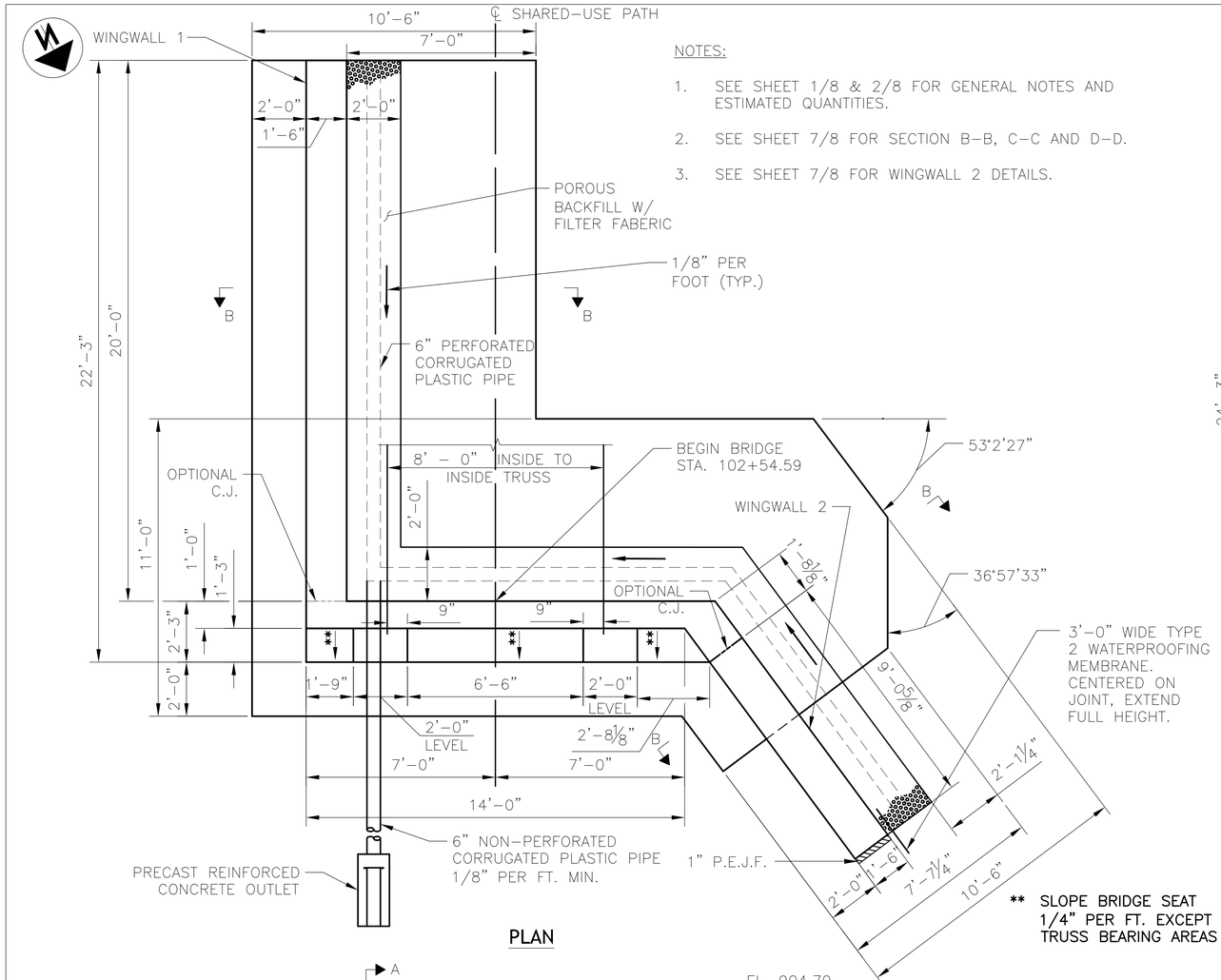

PLAN

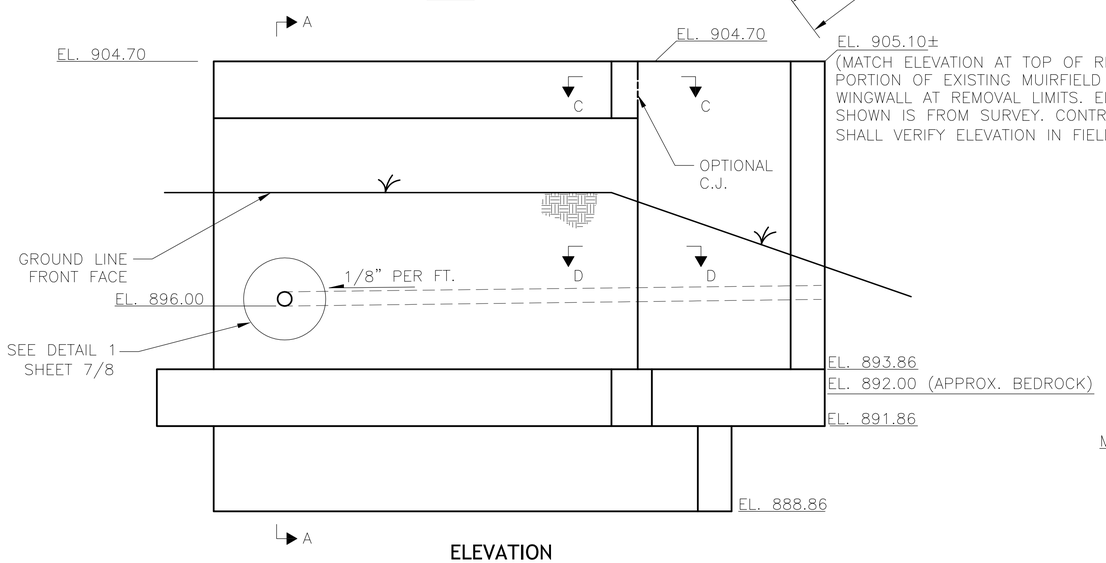

ELEVATION

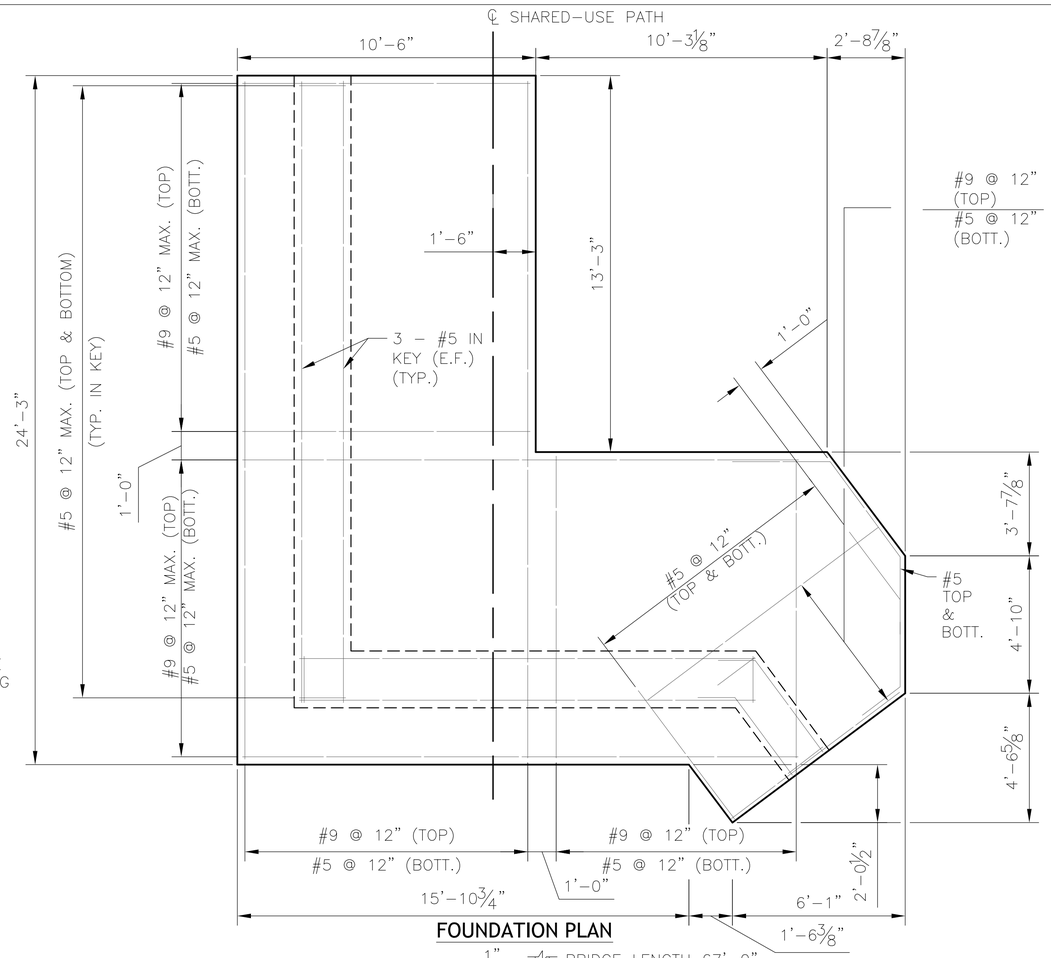

FOUNDATION PLAN

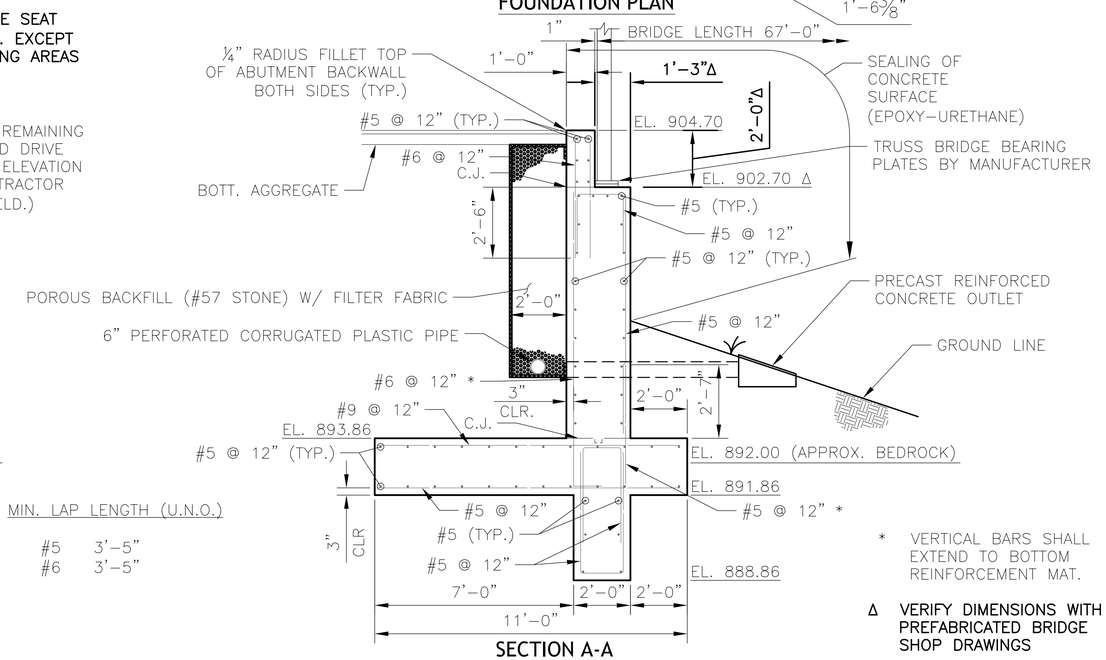

SECTION A-A

MIN. LAP LENGTH (U.N.O.)

#5	3'–5"
#6	3'–5"

* VERTICAL BARS SHALL EXTEND TO BOTTOM REINFORCEMENT MAT.

Δ VERIFY DIMENSIONS WITH PREFABRICATED BRIDGE SHOP DRAWINGS

DESIGN AGENCY
URS
AKRON CLEVELAND COLUMBUS
277 WEST NATIONWIDE BOULEVARD
COLUMBUS, OH 43215-2566
(614) 464-4500

DESIGNED	DRAWN	REVIEWED	DATE
DRC	BAD	RWB	02/2014
CHECKED	REVISED	STRUCTURE FILE NUMBER	
RWB		N/A	

REAR ABUTMENT DETAILS

MUIRFIELD DRIVE/NORTH FORK INDIAN RUN PEDESTRIAN BRIDGES
ALONG MUIRFIELD DRIVE (NORTHBOUND LANE)

MUIRFIELD DRIVE
SHARED USE PATH

5 / 8

20 / 31

File Name: L:\Projects\14578434\TRANS\FRA\08434\structures\08434RE002.dwg - Rear Abutment Details
Modified / By: May 8, 2014 9:52:18 AM / beth_dollboa
Plotted / By: May 20, 2014 3:00:42 PM / Dollboa, Beth

NOTES:

1. SEE SHEETS 1/8 & 2/8 FOR GENERAL NOTES AND ESTIMATED QUANTITIES.
2. SEE SHEET 7/8 FOR SECTION B–B, E–E AND F–F.
3. SEE SHEET 7/8 FOR WINGWALL 2 DETAILS.

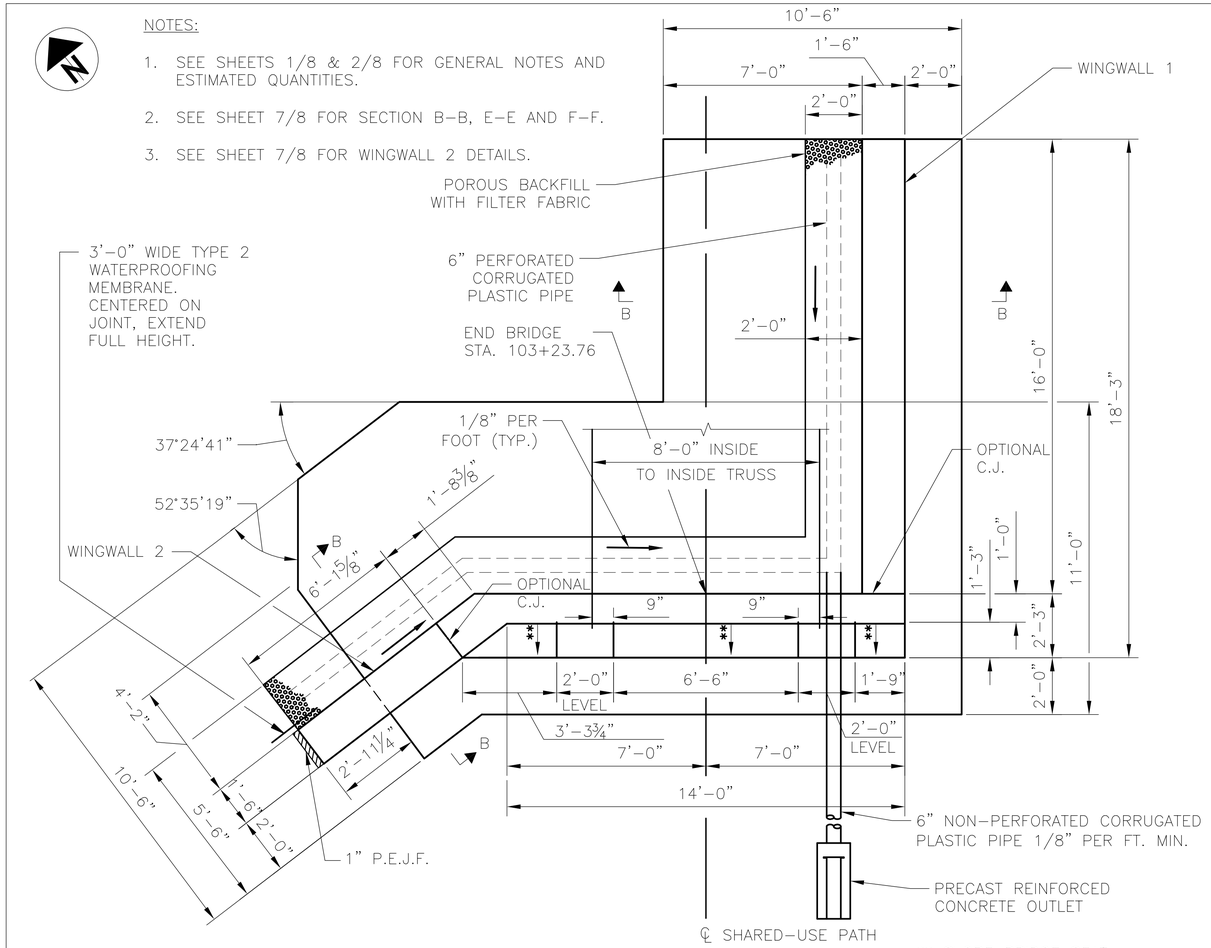

PLAN

** SLOPE BRIDGE SEAT 1/4" PER FT., EXCEPT TRUSS BEARING AREAS

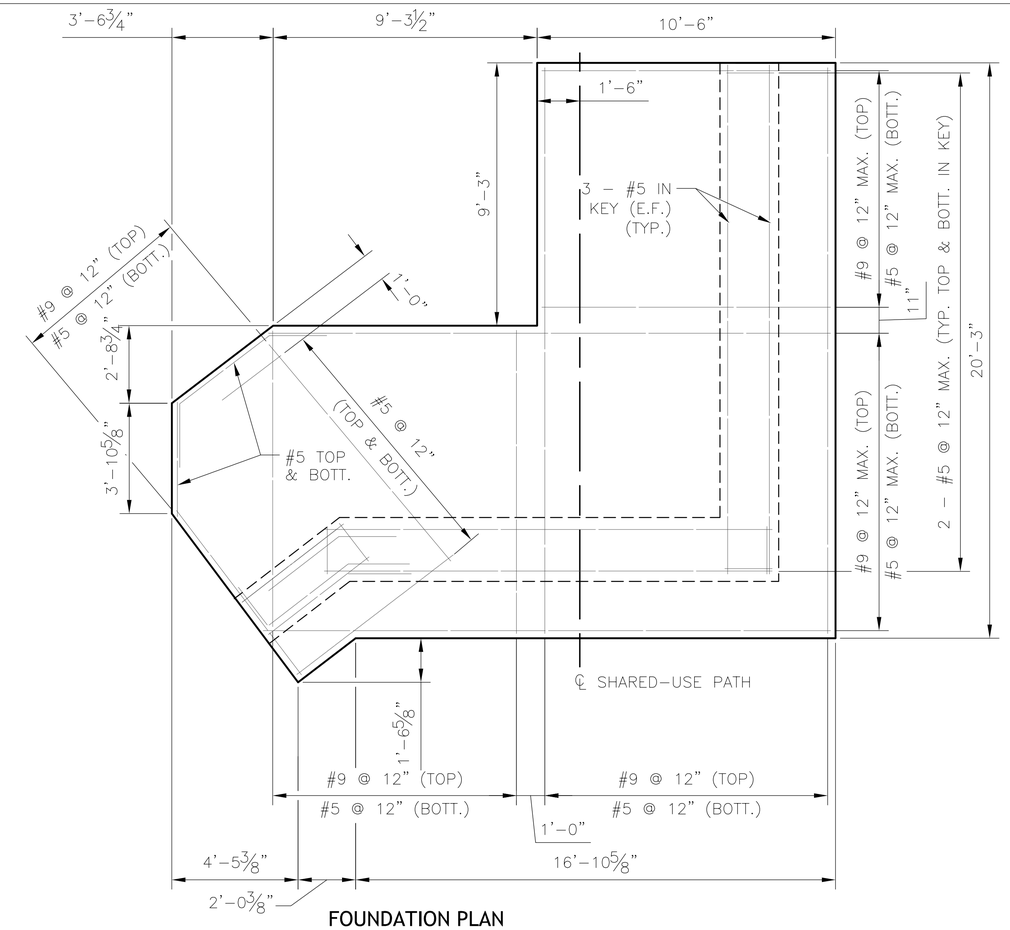

FOUNDATION PLAN

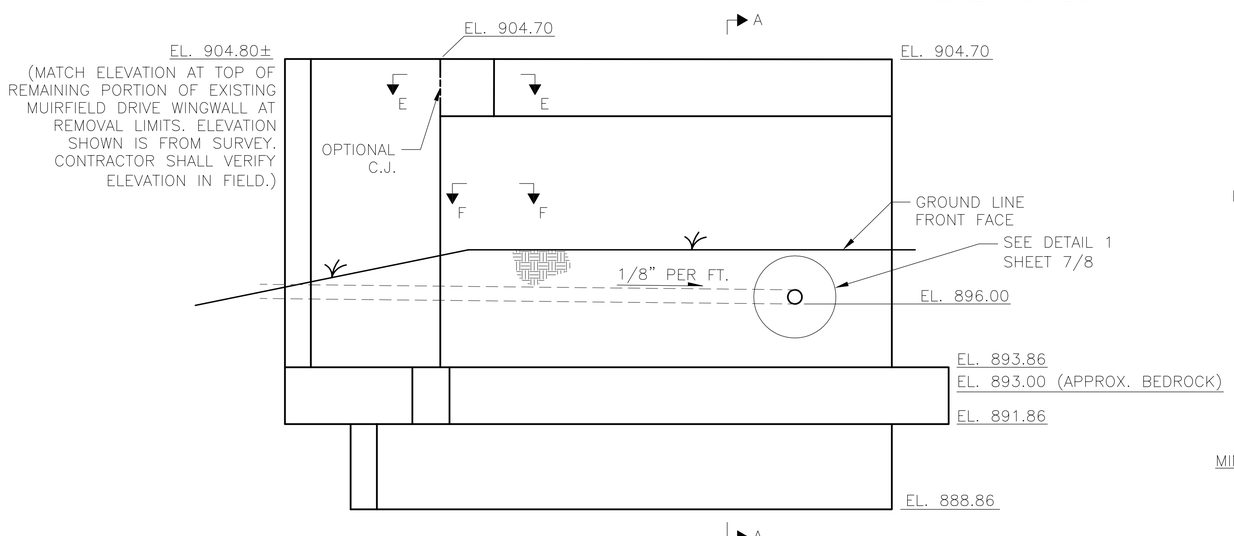

ELEVATION

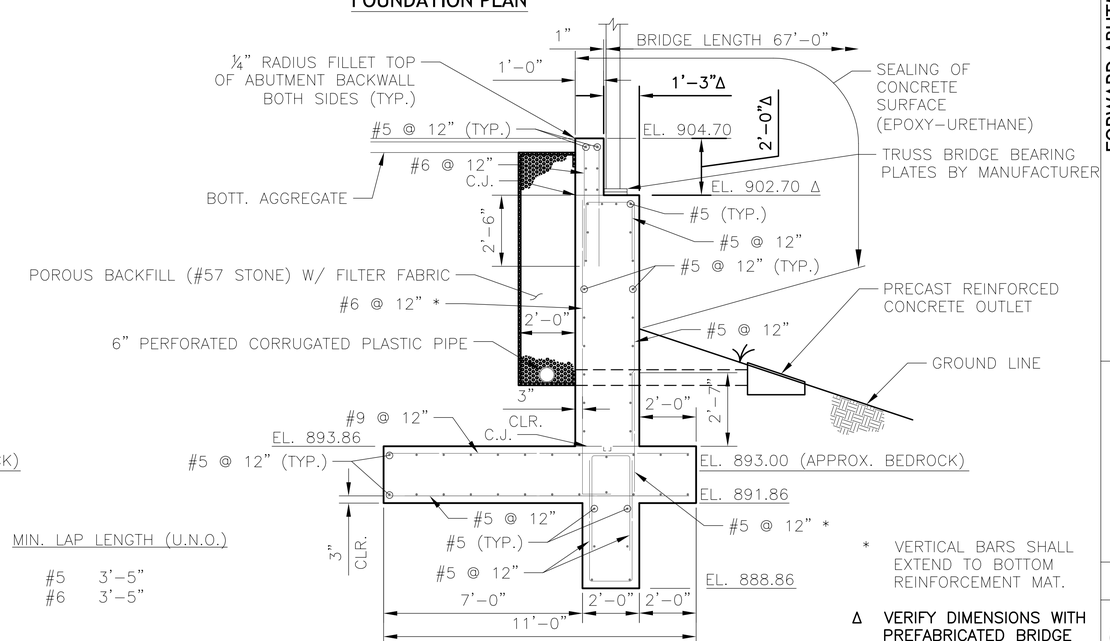

SECTION A-A

MIN. LAP LENGTH (U.N.O.)

#5	3'–5"
#6	3'–5"

* VERTICAL BARS SHALL EXTEND TO BOTTOM REINFORCEMENT MAT.

Δ VERIFY DIMENSIONS WITH PREFABRICATED BRIDGE SHOP DRAWINGS

DESIGN AGENCY
URS
AKRON CLEVELAND COLUMBUS
277 WEST NATIONWIDE BOULEVARD
COLUMBUS, OH 43215-2566
(614) 464-4500

DESIGNED	DRAWN	REVIEWED	DATE
DRC	BAD	RWB	02/2014
CHECKED	REVISED	STRUCTURE FILE NUMBER	
RWB		N/A	

FORWARD ABUTMENT DETAILS

MUIRFIELD DRIVE/NORTH FORK INDIAN RUN PEDESTRIAN BRIDGES ALONG MUIRFIELD DRIVE (NORTHBOUND LANES)

MUIRFIELD DRIVE SHARED USE PATH

6 / 8

21 / 31

File Name: L:\Projects\1457843\4\TRANSIFRA\08434\structures\08434RE002.dwg - Forward Abutment Details
Modified / By: May 8, 2014 9:52:18 AM / beth_dollinoa
Plotted / By: May 20, 2014 3:02:37 PM / Dollinoa, Beth

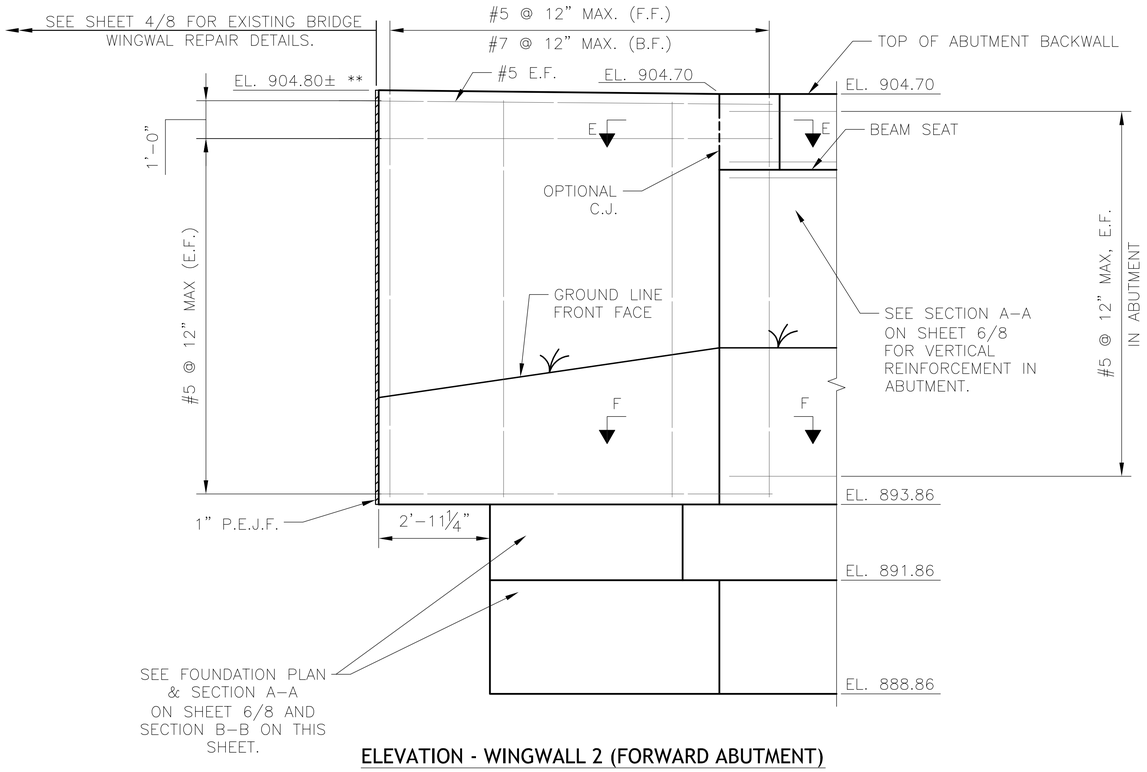

ELEVATION - WINGWALL 2 (FORWARD ABUTMENT)

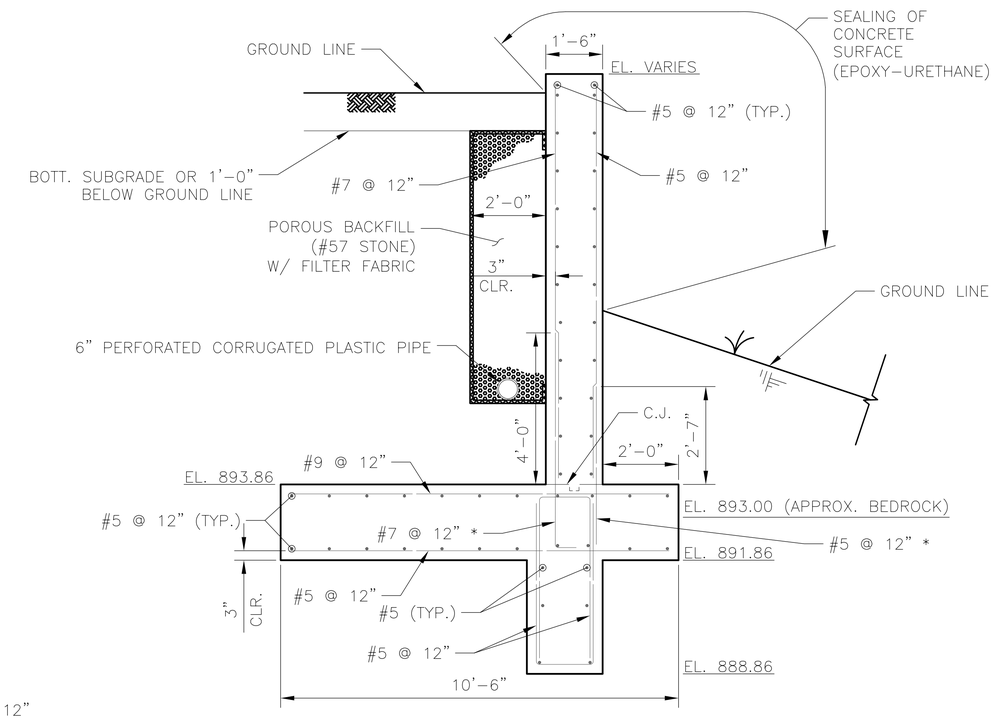

SECTION B-B

* VERTICAL BARS SHALL EXTEND TO BOTTOM REINFORCEMENT MAT.

** MATCH ELEVATION AT TOP OF REMAINING PORTION OF EXISTING MUIRFIELD DRIVE WINGWALL AT REMOVAL LIMITS. ELEVATIONS SHOWN ARE FROM SURVEY. CONTRACTOR SHALL VERIFY ELEVATIONS IN FIELD.

MIN. LAP LENGTH (U.N.O.)

#5 3'-5"
#7 3'-8"

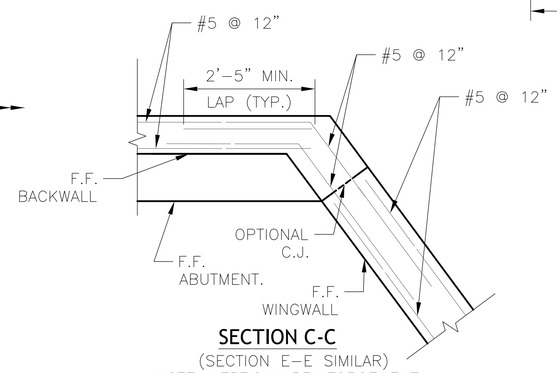

SECTION C-C

(SECTION E-E SIMILAR)
NOTE: VERTICAL REINFORCEMENT NOT SHOWN.

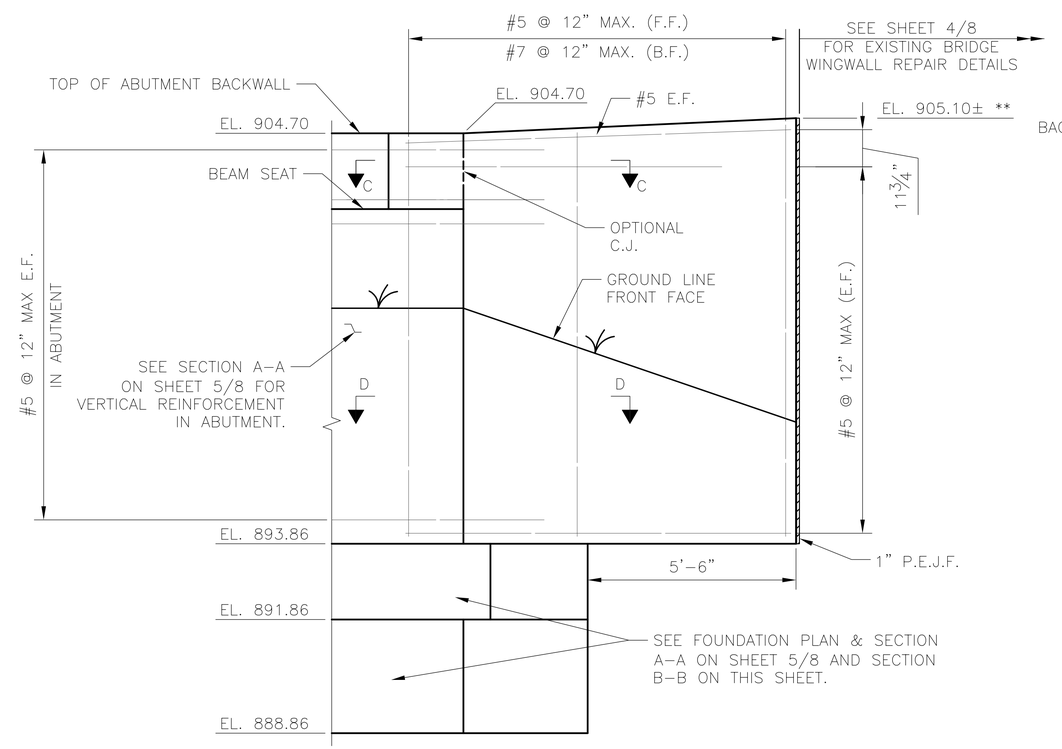

ELEVATION - WINGWALL 2 (REAR ABUTMENT)

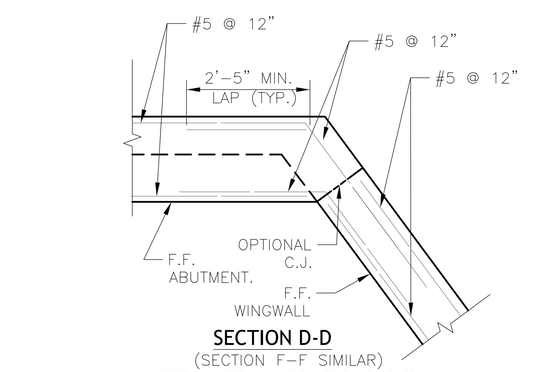

SECTION D-D

(SECTION F-F SIMILAR)
NOTE: VERTICAL REINFORCEMENT NOT SHOWN.

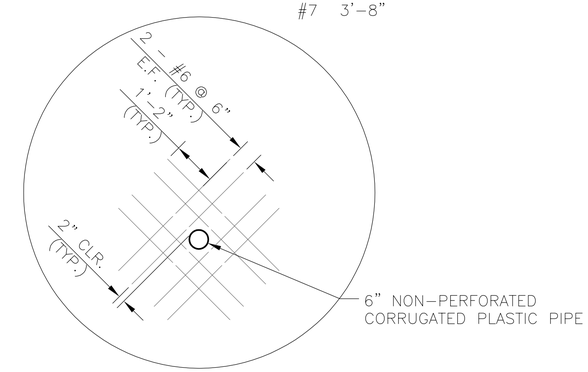

DETAIL 1
ADDITIONAL REINFORCEMENT

NOTE:

1. SEE SHEETS 1/10 & 2/10 FOR GENERAL NOTES AND ESTIMATED QUANTITIES.

DESIGN AGENCY
URS
AKRON CLEVELAND COLUMBUS
277 WEST NATIONWIDE BOULEVARD
COLUMBUS, OH 43215-2566
(614) 464-4500

DATE	REVIEWED	DRAWN	DESIGNED
02/2014	RWB	BAD	DRC
STRUCTURE FILE NUMBER		REVISED	CHECKED
N/A			RWB

WINGWALL DETAILS
MUIRFIELD DRIVE/NORTH FORK INDIAN RUN PEDESTRIAN BRIDGES
ALONG MUIRFIELD DRIVE (NORTHBOUND LANES)

MUIRFIELD DRIVE
SHARED USE PATH

File Name: L:\Projects\14578434\TRANSIFRA\08434\structures\08434RE002.dwg - Wingwall Details
Modified / By: May 7, 2014 10:28:40 AM / beth_dollboa
Plotted / By: May 7, 2014 10:36:56 AM / Dollboa, Beth

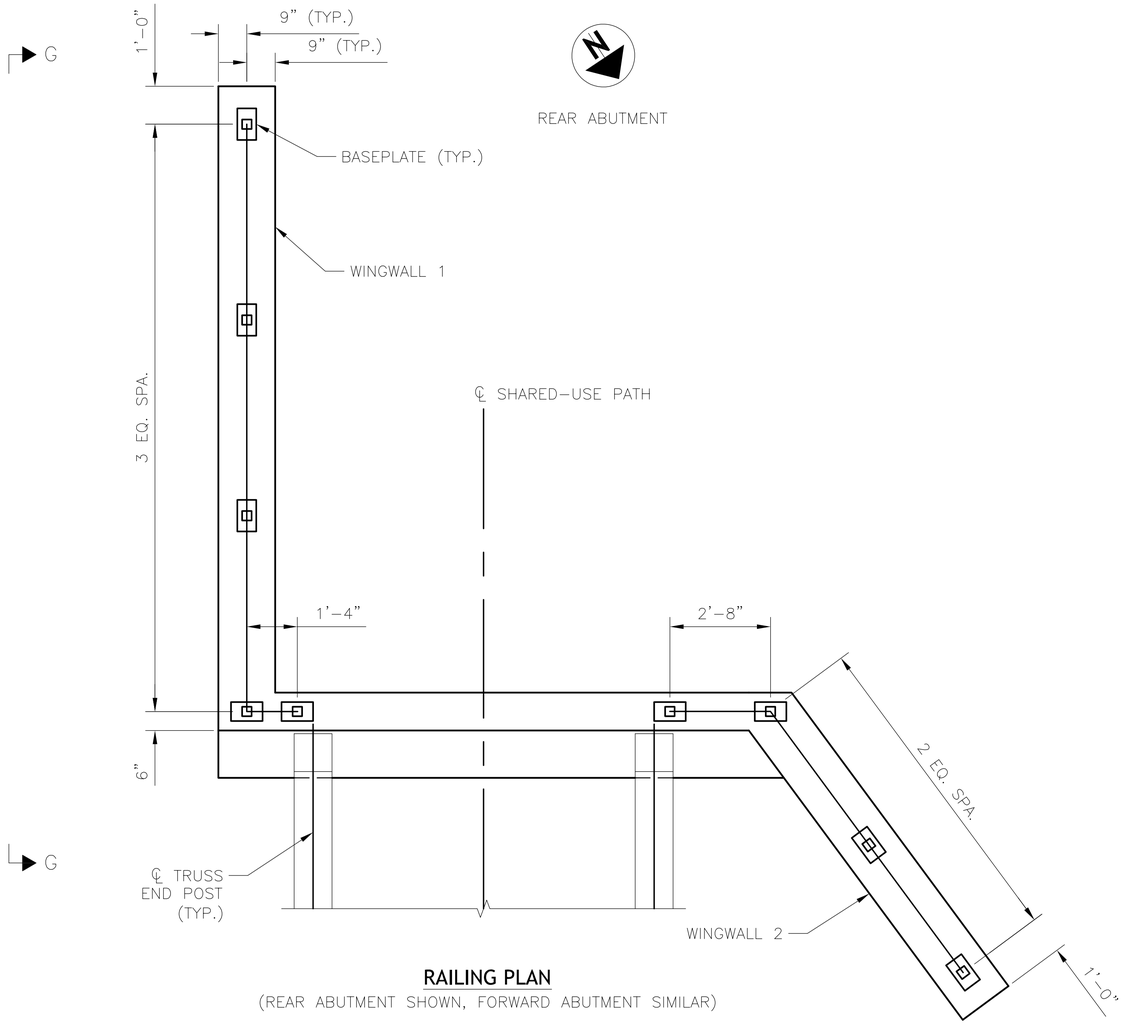

RAILING PLAN

(REAR ABUTMENT SHOWN, FORWARD ABUTMENT SIMILAR)

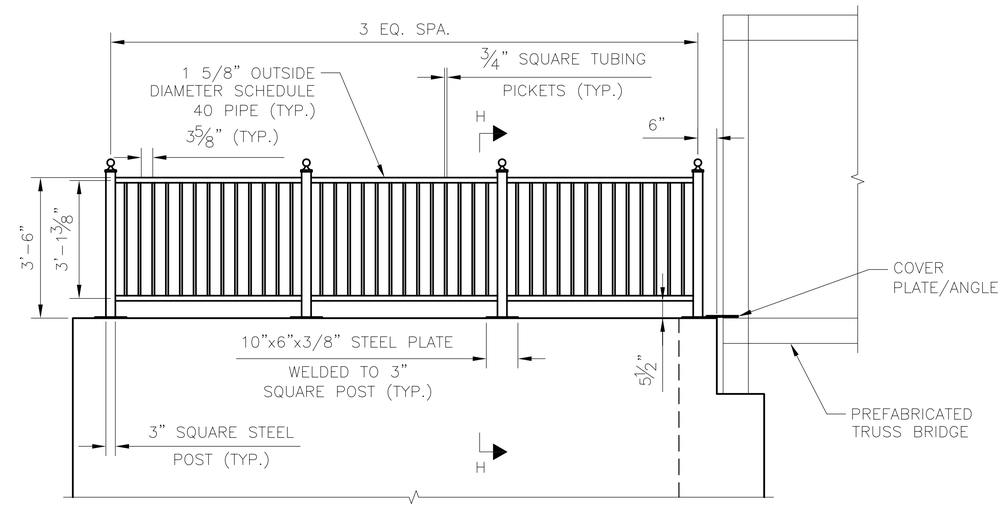

SECTION G-G

(PROPOSED GRADE NOT SHOWN FOR CLARITY)
(WINGWALL 1 SHOWN, WINGWALL 2 SIMILAR)

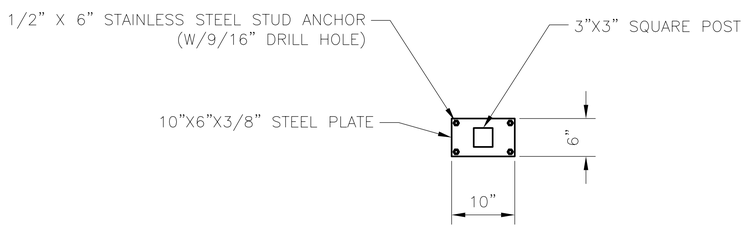

POST SUPPORT BASE PLATE PLAN

(TYP. AT EACH POST)

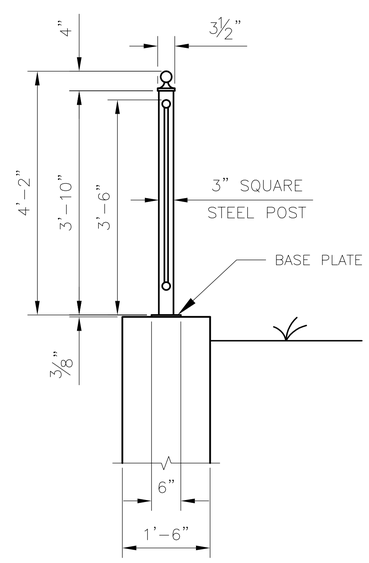

SECTION H-H

RAILING DETAIL

NOTES:

1. ALL RAILING MATERIAL SHALL BE HOT DIPPED GALVANIZED AND POWDER COATED BLACK.
2. PIPE RAIL SHALL BE ASTM A53, TYPE E OR S GRADE B OR ASTM A501 GRADE B. SQUARE TUBES SHALL BE ASTM A500 GRADE B OR ASTM A501.
3. EACH POST SHALL BE WELDED TO A 10"x6"x3/8" STEEL PLATE PRIOR TO GALVANIZING AND PAINTING. THAT PLATE ASSEMBLY SHALL THEN BE ANCHORED TO THE TOP OF THE WINGWALL WITH 4-1/2"x6" STAINLESS STEEL STUDS AND BOLTS.
4. WELDING SHALL BE IN ACCORDANCE WITH ANSI/AWS D1.1, STRUCTURAL WELDING CODE.
5. ALL LABOR, MATERIALS, EQUIPMENT AND INCIDENTALS NECESSARY TO FABRICATE, GALVANIZE, PAINT, AND INSTALL THE METAL RAILING SHALL BE INCLUDED IN THE PER FOOT QUANTITY, ITEM SPECIAL, RAILING (42" HIGH METAL RAILING).
6. POST SPACING SHALL NOT EXCEED 7'-0".
7. FABRICATE AND INSTALL APPROXIMATELY 61' OF 42" HIGH GUARD RAIL CONSTRUCTED OF 1¼" SCHEDULE 40 HANDRAIL PIPE FOR HORIZONTALS, ¾" SQUARE SOLID PICKETS, NO MORE THAN 4¾" ON CENTER, 3"x3" SUPPORT POST WITH BALL CAPS AND 6"x10"x⅜" BASE PLATES. ALL MATERIAL HOT-DIPPED GALVANIZED AND POWDER COATED BLACK, ALL RAILINGS MOUNTED WITH ½"x4" WEDGE ANCHORS, STAINLESS STEEL HARDWARE.

DESIGN AGENCY
URS
AKRON CLEVELAND COLUMBUS
277 WEST NATIONWIDE BOULEVARD
COLUMBUS, OH 43215-2566
(614) 464-4500

DESIGNED	DRAWN	REVIEWED	DATE
DRC	BAD	RWB	02/2014
CHECKED	REVISED	STRUCTURE FILE NUMBER	
RWB		N/A	

RAILING DETAILS

MUIRFIELD DRIVE/NORTH FORK INDIAN RUN PEDESTRIAN BRIDGES
ALONG MUIRFIELD DRIVE (NORTHBOUND LANES)

MUIRFIELD DRIVE SHARED USE PATH

File Name: L:\Projects\1457843\TRANS\FRA\08434\structures\08434RE002.dwg - Railing Details
Modified / By: May 8, 2014 9:52:18 AM / beth_dolibosa
Plotted / By: May 20, 2014 3:04:08 PM / Dolibosa, Beth

DESIGN SPECIFICATIONS:

THIS STRUCTURE CONFORMS TO THE "LRFD BRIDGE DESIGN SPECIFICATIONS" ADOPTED BY THE AMERICAN ASSOCIATION OF STATE HIGHWAY AND TRANSPORTATION OFFICIALS, 2012, INCLUDING ANY INTERIM SPECIFICATIONS AND ODOT BRIDGE DESIGN MANUAL, 2007.

DESIGN LOADING:

DESIGN LOADING: 0.085 KIPS/SQ.FT PEDESTRIAN LOADING AND 8.0 KIP VEHICLE

DESIGN STRESSES:

CAST-IN-PLACE STRUCTURES
CONCRETE CLASS C – COMPRESSIVE STRENGTH 4000 PSI
REINFORCING STEEL – ASTM A615 OR A996 GRADE 60, MINIMUM YIELD STRENGTH 60000 PSI

ITEM 203 EMBANKMENT, AS PER PLAN

PLACE AND COMPACT EMBANKMENT MATERIAL IN 6 INCH LIFTS FOR THE CONSTRUCTION OF THE APPROACH EMBANKMENT.

FOUNDATION BEARING RESISTANCE

SHARED-USE PATH BRIDGE OVER NORTH FORK INDIAN RUN ALONG MUIRFIELD DRIVE:
SPREAD FOOTINGS, AS DESIGNED, PRODUCE A MAXIMUM SERVICE LOAD PRESSURE OF 3.0 KIPS PER SQUARE FOOT AND A MAXIMUM STRENGTH LOAD PRESSURE OF 4.0 KIPS PER SQUARE FOOT. THE FACTORED BEARING RESISTANCE IS 22.0 KIPS PER SQUARE FOOT.

SHARED-USE PATH BRIDGE OVER BEAR RUN ALONG BRAND ROAD:
SPREAD FOOTINGS, AS DESIGNED, PRODUCE A MAXIMUM SERVICE LOAD PRESSURE OF 1.80 KIPS PER SQUARE FOOT AND A MAXIMUM STRENGTH LOAD PRESSURE OF 2.40 KIPS PER SQUARE FOOT. THE FACTORED BEARING RESISTANCE IS 6.5 KIPS PER SQUARE FOOT.

FOOTINGS

FOOTINGS FOR SHARED-USE PATH BRIDGE OVER NORTH FORK INDIAN RUN ALONG MUIRFIELD DRIVE SHALL EXTEND A MINIMUM OF 6 INCHES INTO BEDROCK OR TO THE ELEVATION SHOWN, WHICHEVER IS LOWER.

EXISTING STRUCTURE VERIFICATION

DETAILS AND DIMENSIONS SHOWN ON THESE PLANS PERTAINING TO THE EXISTING STRUCTURES HAVE BEEN OBTAINED FROM PLANS OF THE EXISTING STRUCTURES AND FROM FIELD OBSERVATIONS. CONSEQUENTLY, THEY ARE INDICATIVE OF THE EXISTING STRUCTURES AND THE PROPOSED WORK BUT THEY SHALL BE CONSIDERED TENTATIVE AND APPROXIMATE. THE CONTRACTOR IS REFERRED TO DUBLIN SECTIONS 102.05 AND 105.02.

CONTRACT BID PRICES SHALL BE BASED UPON A RECOGNITION OF THE UNCERTAINTIES DESCRIBED ABOVE AND UPON A PREBID EXAMINATION OF THE EXISTING STRUCTURES BY THE CONTRACTOR. HOWEVER, ALL PROJECT WORK SHALL BE BASED UPON ACTUAL DETAILS AND DIMENSIONS WHICH HAVE BEEN VERIFIED BY THE CONTRACTOR IN THE FIELD.

EXISTING BRIDGE PLANS MAY BE INSPECTED AT THE CITY OF DUBLIN.

DEMOLITION AND CONSTRUCTION: IN REMOVING EXISTING MATERIAL, THE CONTRACTOR SHALL EXERCISE CARE TO PREVENT DAMAGE TO THOSE PARTS OF THE STRUCTURES WHICH ARE TO REMAIN IN PLACE. ANY PORTION OF THE STRUCTURES DAMAGED DURING DEMOLITION AND CONSTRUCTION BY THE CONTRACTOR'S OPERATIONS SHALL BE REPAIRED OR REPLACED BY THE CONTRACTOR AT HIS OWN EXPENSE AND TO THE SATISFACTION OF THE ENGINEER.

ITEM 202, PORTIONS OF STRUCTURE REMOVED, AS PER PLAN
(MUIRFIELD DRIVE BRIDGE)

DESCRIPTION: THIS WORK CONSISTS OF THE REMOVAL OF PORTIONS OF THE NORTH WINGWALLS OF MUIRFIELD DRIVE BRIDGE. THE PROVISIONS OF ITEM 202 APPLY EXCEPT AS SPECIFIED BY THE FOLLOWING NOTES. PERFORM WORK CAREFULLY DURING REMOVAL TO PROTECT PORTIONS OF SUCH SYSTEMS THAT ARE TO BE SALVAGED/INCORPORATED INTO THE PROPOSED STRUCTURE.

SUBSTRUCTURE CONCRETE REMOVAL: REMOVE CONCRETE BY MEANS OF APPROVED PNEUMATIC HAMMERS EMPLOYING POINTED AND BLUNT CHISEL TOOLS. HYDRAULIC HOE-RAM TYPE HAMMERS WILL NOT BE PERMITTED. THE WEIGHT OF THE HAMMER SHALL NOT BE MORE THAN 35 POUNDS FOR REMOVAL WITHIN 18 INCHES OF PORTIONS TO BE PRESERVED. OUTSIDE THE 18 INCH LIMIT, THE CONTRACTOR MAY USE HAMMERS NOT EXCEEDING 90 POUNDS UPON THE APPROVAL OF THE ENGINEER. DO NOT PLACE PNEUMATIC HAMMERS IN DIRECT CONTACT WITH REINFORCING STEEL THAT IS TO BE RETAINED IN THE REBUILT STRUCTURE.

REPLACE OR REPAIR STRUCTURAL MEMBERS DAMAGED BY THE REMOVAL OPERATIONS AT NO EXTRA COST TO THE PROJECT. AT LEAST 7 DAYS BEFORE PERFORMING REPAIR WORK, SUBMIT A PROPOSED REPAIR PLAN, DEVELOPED BY AN OHIO REGISTERED PROFESSIONAL ENGINEER TO THE ENGINEER. OBTAIN THE ENGINEER'S APPROVAL BEFORE PERFORMING REPAIR.

MEASUREMENT & PAYMENT: THE CITY WILL MEASURE THE QUANTITY OF REMOVALS ON A LUMP SUM BASIS. THE CITY WILL PAY FOR THE ACCEPTED QUANTITIES OF REMOVALS AT THE CONTRACT PRICE FOR ITEM 202, PORTIONS OF STRUCTURE REMOVED, AS PER PLAN.

UTILITIES

SUPPORT AND PROTECTION OF ALL UTILITIES AND APPURTENANCES SHALL BE THE RESPONSIBILITY OF THE CONTRACTOR. COSTS FOR THE REPAIR AND RESTORATION OF EXISTING UTILITIES DAMAGED BY THE CONTRACTOR SHALL BE THE RESPONSIBILITY OF THE CONTRACTOR. COSTS ASSOCIATED WITH THE ABOVE WORK RESPONSIBILITIES SHALL BE INCLUDED IN THE PRICE BID FOR VARIOUS ITEMS.

PRIOR TO EXCAVATION, THE CONTRACTOR SHALL GIVE A 48-HOUR NOTICE TO THE OHIO UTILITIES PROTECTION SERVICE(OUPS) BY CALLING 811. A 48-HOUR NOTICE SHALL BE GIVEN TO THE OWNERS OF UNDERGROUND UTILITIES SHOWN ON THE PLANS WHO ARE NOT MEMBERS OF A REGISTERED UNDERGROUND PROTECTION SERVICE.

CUT LINE CONSTRUCTION JOINT PREPARATION
(MUIRFIELD DRIVE BRIDGE)

SAW CUT BOUNDARIES OF PROPOSED CONCRETE REMOVALS 1/2 INCH DEEP. REMOVE CONCRETE TO A ROUGH SURFACE. LEAVE THE EXISTING REINFORCING STEEL, IF REQUIRED IN THE PLANS, IN PLACE. INSTALL DOWEL BARS IF SPECIFIED. PRIOR TO CONCRETE PLACEMENT, ABRASIVELY CLEAN JOINT SURFACES AND EXISTING EXPOSED REINFORCEMENT TO REMOVE LOOSE AND DISINTEGRATED CONCRETE AND LOOSE RUST. THOROUGHLY CLEAN THE JOINT SURFACE AND EXPOSED REINFORCEMENT OF ALL DIRT, DUST, RUST OR OTHER FOREIGN MATERIAL BY THE USE OF WATER, AIR UNDER PRESSURE, OR OTHER METHODS THAT PRODUCE SATISFACTORY RESULTS. EXISTING REINFORCING STEEL DOES NOT HAVE TO HAVE A BRIGHT STEEL FINISH, BUT REMOVAL ALL PACK AND LOOSE RUST. THOROUGHLY DRENCH EXISTING CONCRETE SURFACES WITH CLEAN WATER AND ALLOW TO DRY TO A DAMP CONDITION BEFORE PLACING CONCRETE.

ITEM 503 – COFFERDAM AND EXCAVATION BRACING, AS PER PLAN

TEMPORARY SHORING SHALL BE REMOVED AFTER COMPLETION OF WORK.

ITEM 509 – REINFORCING STEEL, REPLACEMENT OF EXISTING REINFORCING STEEL, AS PER PLAN
(MUIRFIELD DRIVE BRIDGE)

ANY EXISTING REINFORCING BARS DEEMED BY THE ENGINEER TO BE UNUSABLE BECAUSE OF CORROSION SHALL BE REPLACED WITH NEW EPOXY COATED REINFORCING STEEL. ANY EXISTING REINFORCING BARS WHICH ARE TO BE INCORPORATED INTO THE NEW WORK AND ARE MADE UNUSABLE BY CONCRETE REMOVAL OPERATIONS SHALL BE REPLACED WITH NEW EPOXY COATED REINFORCING STEEL OF THE SAME SIZE AT THE CONTRACTOR'S COST. ALL WORK SHALL BE TO THE SATISFACTION OF THE ENGINEER.

A CONTINGENCY QUANTITY OF 200 POUNDS OF REINFORCING STEEL IS INCLUDED UNDER ITEM 509 – REINFORCING STEEL. REPLACEMENT OF EXISTING REINFORCING STEEL, AS PER PLAN, TO BE USED AS DIRECTED BY THE ENGINEER.

THE NUMBER OF POUNDS OF REINFORCING STEEL PAID FOR AT THE CONTRACT UNIT PRICE SHALL BE THE ACTUAL POUNDS OF REPLACEMENT REINFORCING STEEL SPECIFIED BY THE ENGINEER DUE TO CORROSION, AND SHALL INCLUDE PLACEMENT, DOWELING, BENDING, SUPPORTING, TIE WIRES AND TYING OF THAT SPECIFIED REINFORCING STEEL.

ITEM 511 – CLASS C CONCRETE FOOTING, AS PER PLAN
ITEM 511 – CLASS C CONCRETE, WINGWALL ABOVE FOOTING, AS PER PLAN
ITEM 511 – CLASS C CONCRETE, ABUTMENT ABOVE FOOTING, AS PER PLAN

USE EPOXY COATED REINFORCING STEEL, 60 KSI MINIMUM YIELD STRENGTH, CONFORMING TO SPECIFICATION SECTION 509. SUBMIT SHOP DRAWINGS FOR THE FABRICATION, BENDING, AND PLACEMENT OF REINFORCING STEEL BARS, INCLUDING BAR SCHEDULES, AT LEAST 7 DAYS PRIOR TO FABRICATION, FOR THE ENGINEER'S APPROVAL.

ALL STEEL REINFORCEMENT IN CONCRETE SHALL BE CONSIDERED INCIDENTAL TO THE CONCRETE. PAYMENT SHALL BE INCLUDED IN THE UNIT PRICE FOR THE CONCRETE.

CONCRETE FINISHING

CHAMFER EXPOSED CONCRETE EDGES ¾" BY ¾" UNLESS DIRECTED OTHERWISE BY THE ENGINEER.

ITEM 512 – SEALING OF CONCRETE SURFACES, AS PER PLAN (EPOXY-URETHANE)

SEALING OF CONCRETE SURFACES, AS DELINEATED, FOR THE SHARED-USE PATH BRIDGE OVER NORTH FORK INDIAN RUN ALONG MUIRFIELD DRIVE SHALL BE MATCHED TO THE EXISTING ADJACENT MUIRFIELD DRIVE BRIDGE.

ITEM 518 – 6" NON-PERFORATED CORRUGATED PIPE, INCLUDING SPECIALS, 720.08, AS PER PLAN

IN ADDITIONS TO THE PIPE AND ALL SPECIALS, THE COST OF THE PRECAST REINFORCED CONCRETE OUTLET SHALL BE INCLUDED IN THE UNIT COST FOR ITEM 518 – 6" NON-PERFORATED CORRUGATED PIPE, INCLUDING SPECIALS,720.08, AS PER PLAN. THE PRECAST REINFORCED CONCRETE OUTLET SHALL BE IN ACCORDANCE WITH ODOT STANDARD DRAWING DM-1.1 (REVISED 1-18-13).

ABBREVIATIONS:

℄	BASELINE
℄	CENTERLINE
APPROX.	APPROXIMATELY
B.F.	BACK FACE
BOTT.	BOTTOM
C.P.P.	CORRUGATED PLASTIC PIPE
C.I.P.	CAST IN PLACE
C.J.	CONSTRUCTION JOINT
CLR.	CLEAR
DIA.	DIAMETER
E.F.	EACH FACE
EL.	ELEVATION
E.P.	EDGE OF PAVEMENT
EQ.	EQUAL
EX.	EXISTING
EXIST.	EXISTING
F.A.	FORWARD ABUTMENT
F.F.	FRONT FACE
℄	FLOW LINE
INV.	INVERT
LT.	LEFT
MAX.	MAXIMUM
MIN.	MINIMUM
N.F.I.R	NORTH FORK INDIAN RUN
OFF.	OFFSET
P.E.J.F.	PREFORMED EXPANSION JOINT FILLER
P.F.	PROFILE GRADE
PROP.	PROPOSED
R.A.	REAR ABUTMENT
R.F.	REAR FACE
RT.	RIGHT
SPA.	SPACE
S.O.	SERIES OF
STA.	STATION
STR.	STRAIGHT
TEMP.	TEMPORARY
T.O.W.	TOP OF WALL
TYP.	TYPICAL
U.N.O.	UNLESS NOTED OTHERWISE
W/	WITH

ENGINEERS SEAL FOR BRIDGES:

SEE BRAND ROAD SHARED-USE PATH 11-022-CIP

SIGNED: _____

DATE: _____

DESIGN AGENCY
RW ARMSTRONG
471 E BROAD ST., SUITE 2010
COLUMBUS, OH 43215

DATE	REVIEWED	DRAWN	REVISED	DESIGNED	CHECKED
06/2013	FRR	ALM		ALM	JNS

STRUCTURE FILE NUMBER N/A

STRUCTURE GENERAL NOTES (1 OF 2)
PEDESTRIAN BRIDGE OVER NORTH FORK INDIAN RUN ALONG SOUTHBOUND MUIRFIELD DRIVE

MUIRFIELD DRIVE / NORTH FORK INDIAN RUN PEDESTRIAN BRIDGES

1 / 8

24 / 31

File Name: L:\Projects\14578434\TRANS\FRA\08434\road\wy\sheets\BridgePlans\Sheets\08434EQ001.dwg - STRUCTURAL NOTES
Modified / By: May 21, 2014 2:34:07 PM / beth_dolboa
Plotted / By: May 21, 2014 2:35:49 PM / Dolboa, Beth

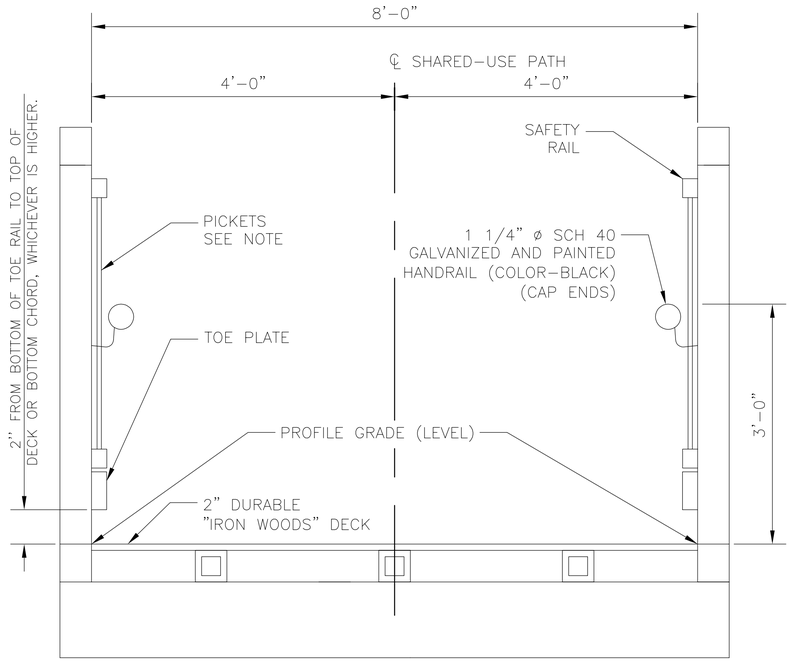

TRANSVERSE SECTION

SUB-SUMMARY				
ITEM	TOTAL	UNIT	DESCRIPTION	REF. SHEET
202	1	LUMP	PORTIONS OF STRUCTURES REMOVED, AS PER PLAN	1/10
503	1	LUMP	COFFERDAMS AND EXCAVATION BRACING, AS PER PLAN	1/10
503	1	LUMP	UNCLASSIFIED EXCAVATION	
511	70	CU YD	CLASS C CONCRETE, FOOTING, AS PER PLAN	1/10
511	31	CU YD	CLASS C CONCRETE, WINGWALL ABOVE FOOTING, AS PER PLAN	1/10
511	25	CU YD	CLASS C CONCRETE, ABUTMENT ABOVE FOOTING, AS PER PLAN	1/10
512	5	SQ YD	TYPE 2 WATERPROOFING MEMBRANE	
512	71	SQ YD	SEALING CONCRETE SURFACES (EPOXY-URETHANE), AS PER PLAN	1/10
516	34	SQ FT	1" PREFORMED EXPANSION JOINT FILLER	
518	48	CU YD	POROUS BACKFILL WITH FILTER FABRIC	
518	79	FT	6" PERFORATED CORRUGATED PIPE, INCLUDING SPECIALS, 720.12	
518	45	FT	6" NON-PERFORATED CORRUGATED PIPE, INCLUDING SPECIALS, 720.08, AS PER PLAN	1/10
519	17	CU FT	SPECIAL-PATCHING CONCRETE STRUCTURE, MISC.; MUIRFIELD DRIVE WINGWALL	4/10
SPECIAL	56	FT	RAILING (42" HIGH METAL RAILING)	
SPECIAL	1	LUMP	ITEM SPECIAL-STRUCTURE MISC.: 67' PRE-ENGINEERED HALF THROUGH TRUSS	2/10
			PEDESTRIAN BRIDGE, H TRUSS DESIGN	

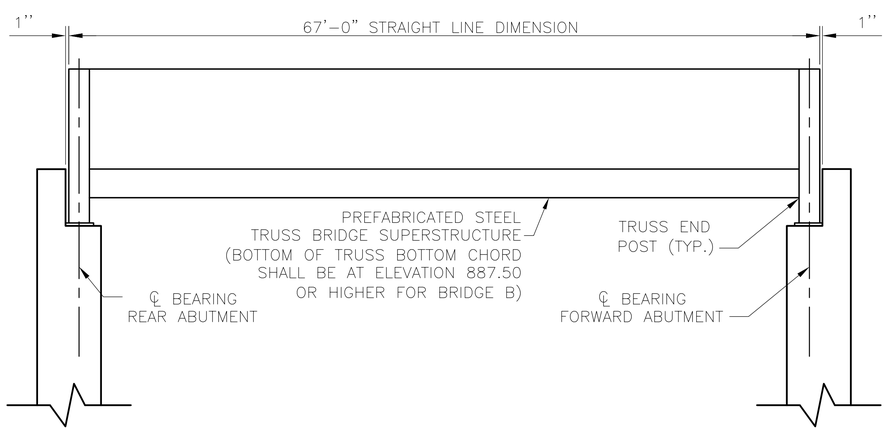

ELEVATION

NOT TO SCALE

NOTES:

1. THE FOLLOWING BRIDGE MANUFACTURERS ARE QUALIFIED SUPPLIERS
   - CONTINENTAL BRIDGE
   - WHEELER BRIDGE
   - STEADFAST BRIDGES
   - BIG R BRIDGE
   - ECHO BRIDGE
   - EXCEL BRIDGE
   - PIONEER BRIDGE

2. THE BRIDGE SHALL HAVE PICKETS, SPACED TO GIVE A 4" GAP. BRIDGES SHALL MEET REQUIREMENTS LISTED IN SPECIAL SPECIFICATIONS OF THE CONTRACT DOCUMENT.

3. BRIDGE SHALL BE H-TRUSS DESIGN.

4. CHAMFER EXPOSED CONCRETE SURFACES ¾" UNLESS SHOWN OTHERWISE

DESIGN AGENCY
RW ARMSTRONG
471 E BROAD ST., SUITE 2010
COLUMBUS, OH 43215

DESIGNED	DRAWN	REVIEWED	DATE
ALM	ALM	FRR	06/2013
CHECKED	REVISED	STRUCTURE FILE NUMBER	
JNS		N/A	

STRUCTURE GENERAL NOTES (2 OF 2)

PEDESTRIAN BRIDGE OVER NORTH FORK INDIAN RUN ALONG SOUTHBOUND MUIRFIELD DRIVE

MUIRFIELD DRIVE / NORTH FORK INDIAN RUN PEDESTRIAN BRIDGES

File Name: L:\Projects\14578434\TRANS\FRA\08434\roadway\sheets\BridgePlans\Sheets\08434EQ001.dwg - STRUCTURAL NOTES (2)
Modified / By: May 21, 2014 2:34:07 PM / beth_dolitoa
Plotted / By: May 21, 2014 2:39:10 PM / Dolitoa, Beth

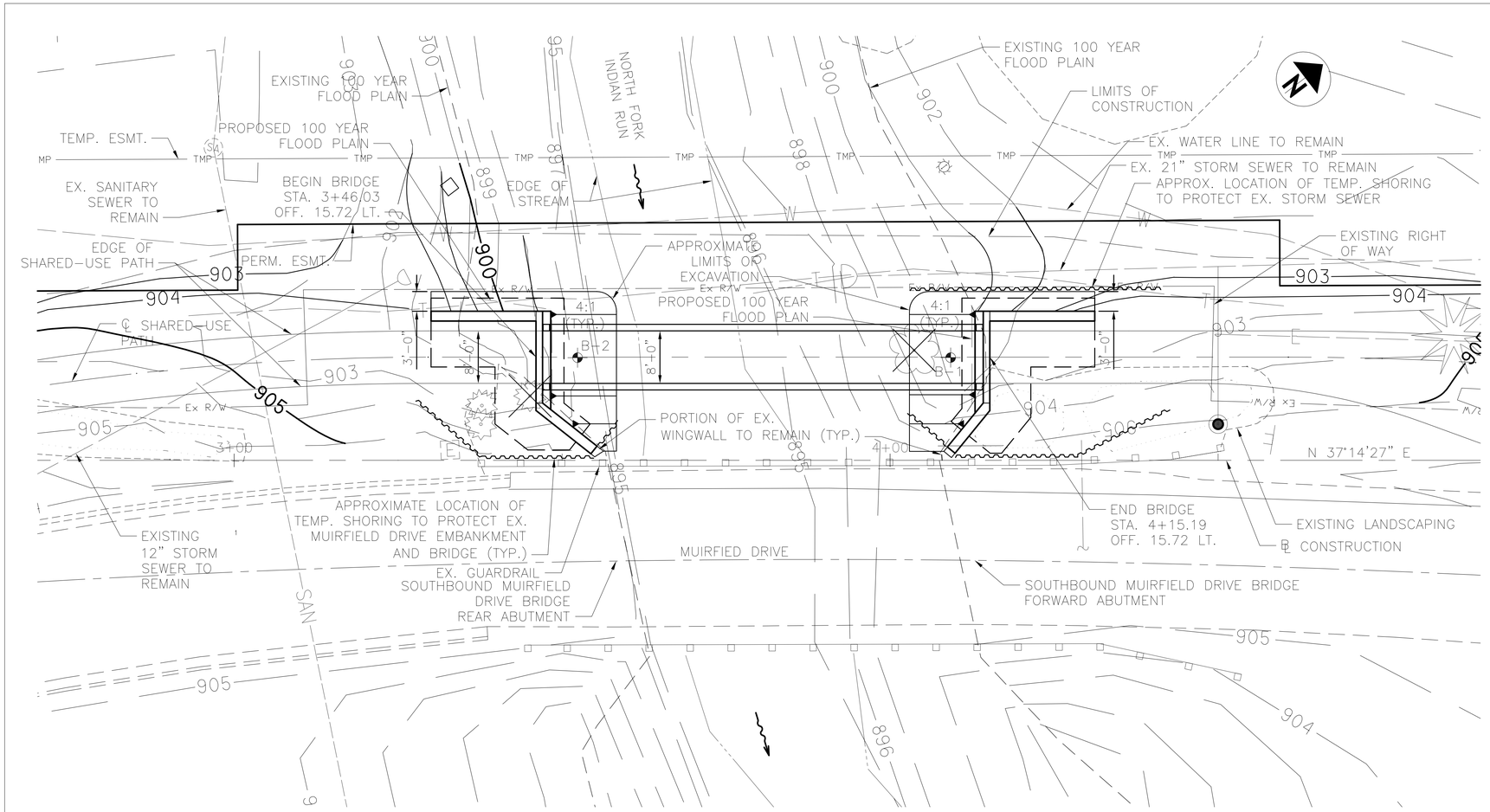

PLAN

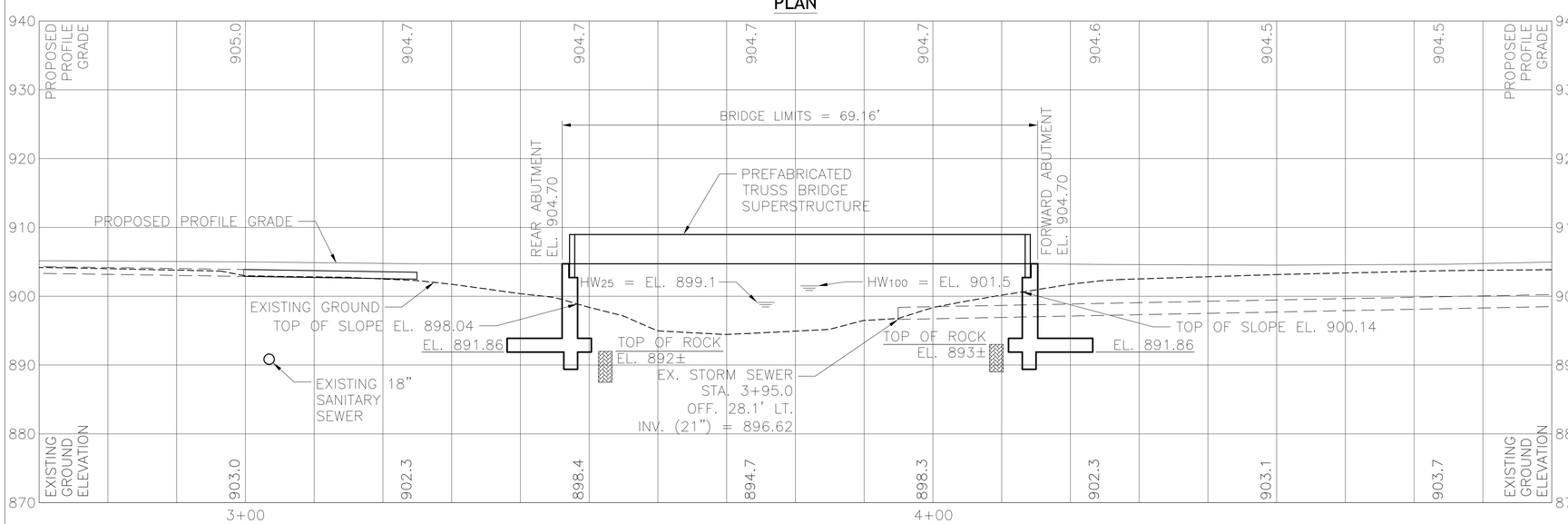

PROFILE ALONG ℄ SHARED USED PATH

BENCHMARK DATA			
BM #1 STA.4+65.10	ELEV. 905.78	OFFSET 31.59	RT.

NOTES

EARTHWORK LIMITS SHOWN ARE APPROXIMATE. ACTUAL SLOPES SHALL CONFORM TO PLAN CROSS SECTIONS.

0 10 20

SCALE: 1" = 10'

LEGEND

BORING LOCATION

HYDRAULIC DATA (Q'S PROVIDED BY CDM MODEL FROM THE CITY OF DUBLIN)

DRAINAGE AREA = 8.4 SQ. MILES
Q (25) = 426 CFS V (25) = 3.15 FT/S
Q (100) = 1070 CFS V (100) = 4.12 FT/S
STRUCTURE CLEARS THE 100 YEAR DESIGN HW BY 1.7 FEET.

PROPOSED STRUCTURE

TYPE: SINGLE SPAN PREFABRICATED STEEL TRUSS SUPERSTRUCTURE SUPPORTED ON REINFORCED CONCRETE ABUTMENTS

SPANS: 67'-0" OUT-TO-OUT BRIDGE TRUSS
ROADWAY: 8'-0" FACE/FACE TRUSS
LOADING: 85 PSF (PEDESTRIAN LOAD) AND 8 KIP VEHICLE
SKEW: 0° 00' 00"
APPROACH SLABS: NONE
ALIGNMENT: TANGENT
CROWN: LEVEL
COORDINATES: LATITUDE 40° 07' 42" N
LONGITUDE 83° 08' 57" W

DESIGN AGENCY
RW ARMSTRONG
471 E BROAD ST., SUITE 2010
COLUMBUS, OH 43215

DESIGNED	DRAWN	REVIEWED	DATE
ALM	ALM	FRR	06/2013
CHECKED	REVISED	STRUCTURE FILE NUMBER	
JNS		N/A	

FRANKLIN COUNTY
STA. 3+46.03
STA. 4+15.19

SITE PLAN
SHARED-USE PATH BRIDGE OVER NORTH FORK INDIAN RUN ALONG MUIRFIELD DRIVE

MUIRFIELD DRIVE / NORTH FORK INDIAN RUN PEDESTRIAN BRIDGES

File Name: L:\Projects\14578434\TRANS\FRA\08434\roadway\sheets\BridgePlans\Sheets\08434SP001.dwg - Sheet
Modified / By: May 22, 2014 9:38:13 AM / fonda_welker
Plotted / By: May 22, 2014 9:58:17 AM / Doliboa, Beth

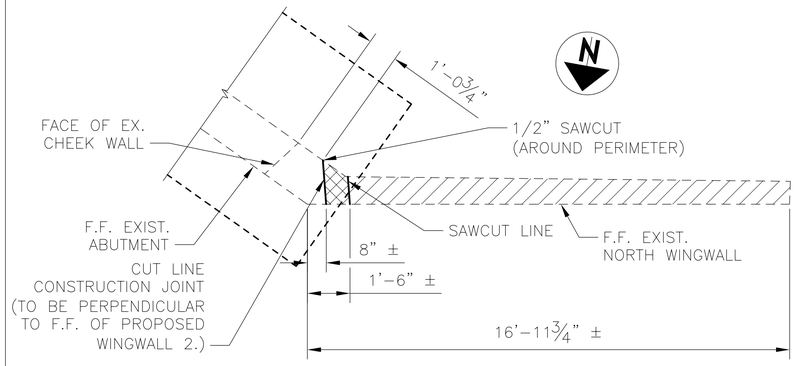

PLAN
REAR ABUTMENT

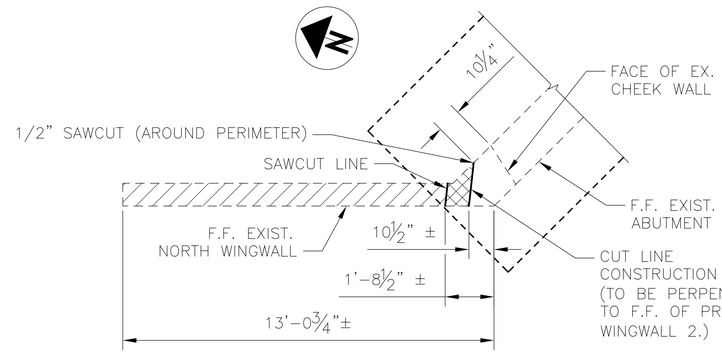

PLAN
FORWARD ABUTMENT

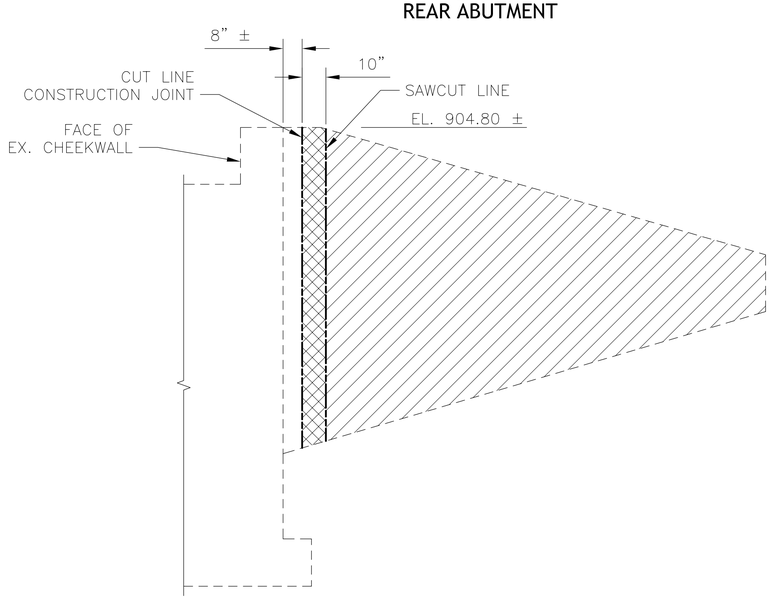

ELEVATION
REAR ABUTMENT

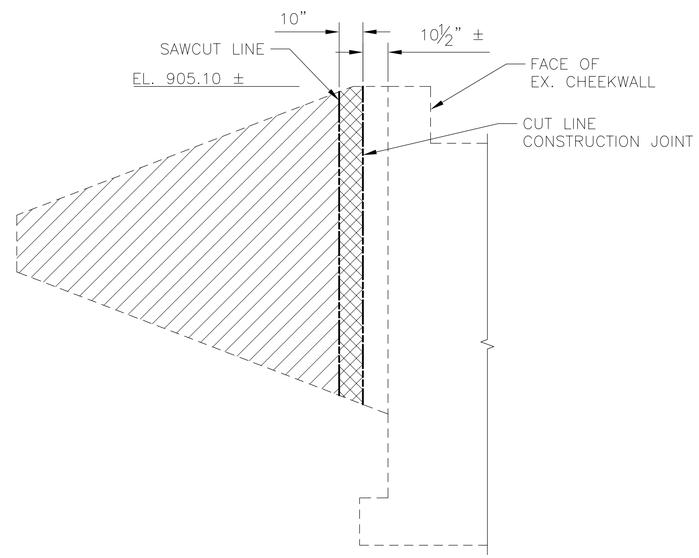

ELEVATION
FORWARD ABUTMENT

NOTES:

1. SEE SHEETS 1/8 & 2/8 FOR GENERAL NOTES AND ESTIMATED QUANTITIES.
2. EXISTING DIMENSIONS AND ELEVATIONS ARE OBTAINED FROM EXISTING DRAWINGS AND SURVEY. CONTRACTOR SHALL VERIFY DIMENSIONS AND ELEVATIONS IN THE FIELD.
3. EXISTING HORIZONTAL REINFORCEMENT IN WINGWALL SHALL BE CUT AT THE SAWCUT LINES. EXISTING HORIZONTAL REINFORCEMENT SHALL REMAIN WITHIN THE LIMITS OF REMOVAL WITH HAND TOOLS AND SHALL BE BENT TO FIT INSIDE THE 6" CONCRETE REPAIR AS SHOWN ON THIS SHEET TO MAINTAIN A 2" COVER.

   IF EXISTING REINFORCEMENT DOES NOT PROTRUDE FROM CONSTRUCTION JOINT INTO THE PROPOSED CONCRETE REPAIR, CONTRACTOR SHALL PROVIDE HORIZONTAL BARS AT EACH FACE AT 1'-0" MAX SPACING. REINFORCEMENT SHALL BE EMBEDDED 8" INTO HORIZONTAL DOWEL HOLES IN THE REMAINING EXISTING CONCRETE AND SHALL HAVE A 90° STANDARD HOOK IN THE REPAIR CONCRETE. DOWEL HOLES AND REINFORCEMENT TO BE APPROVED BY THE ENGINEER.
4. REPAIR CONCRETE MIX SHALL BE SIKACRETE 211 SCC PLUS OR EQUAL. APPLY A BONDING AGENT TO THE SURFACE OF THE EXISTING CONCRETE TO COME IN CONTACT WITH NEW CONCRETE. BONDING AGENT SHALL BE SIKA ARMATEC 110 EPOCEM OR EQUAL. CONCRETE MIX & BONDING AGENT SHALL BE COMPATIBLE AND PRODUCED BY THE SAME MANUFACTURER. APPLY BONDING AGENT AND PERFORM CONCRETE REPAIR IN ACCORDANCE WITH THE MANUFACTURER'S RECOMMENDATION.

   PRE-APPROVED MANUFACTURER:
   SIKA CORPORATION
   201 POLITO AVENUE
   LYNDHURST, NJ 07071
   PHONE: 800-933-7452

   ALL MATERIAL AND WORK ASSOCIATED WITH THE CONCRETE REPAIR SHALL BE INCIDENTAL TO ITEM 519-SPECIAL-PATCHING CONCRETE STRUCTURE, MISC.: MUIRFIELD DRIVE WINGWALL.
5. EXPANSION JOINT MATERIAL SHALL CONFORM TO ASTM D1752, TYPE 1 (RECYCLED RUBBER EXPANSION MATERIAL). FIBROUS TYPE EXPANSION MATERIAL SHALL NOT BE USED.

EXISTING MUIRFIELD DRIVE BRIDGE REMOVAL DETAILS

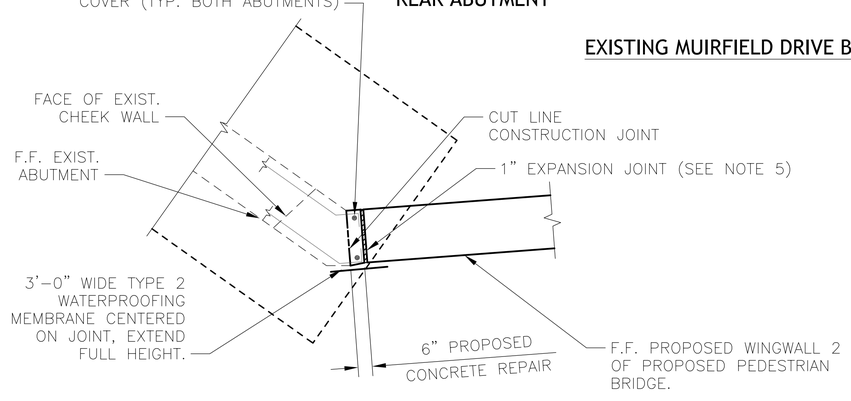

PROPOSED ABUTMENT REHAB PLAN
REAR ABUTMENT

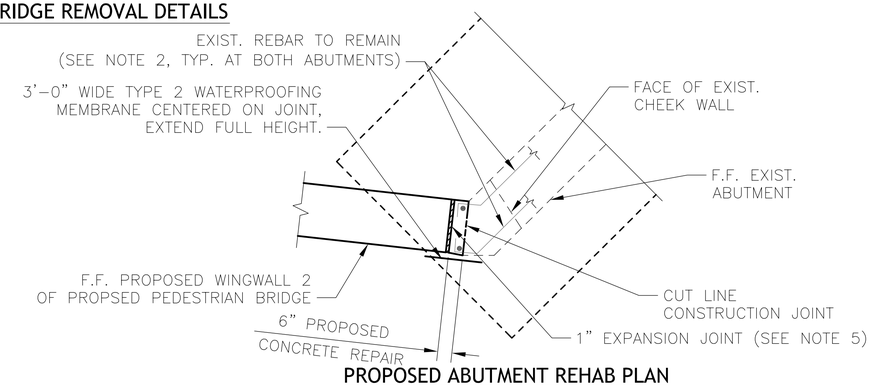

PROPOSED ABUTMENT REHAB PLAN
FORWARD ABUTMENT

LEGEND:

REMOVAL

REMOVAL WITH HAND TOOLS

DESIGN AGENCY
RW ARMSTRONG
471 E. BROAD ST., SUITE 2010
COLUMBUS, OH 43215

DESIGNED	DRAWN	REVIEWED	DATE
ALM	ALM	FRR	06/2013
CHECKED	REVISED	STRUCTURE FILE NUMBER	
JNS		N/A	

REMOVAL AND REPAIR DETAILS
PEDESTRIAN BRIDGE OVER NORTH FORK INDIAN RUN ALONG SOUTHBOUND MUIRFIELD DRIVE

MUIRFIELD DRIVE / NORTH FORK INDIAN RUN PEDESTRIAN BRIDGES

4 / 8

27 / 31

File Name: L:\Projects\1457843\TRAN\SFRA\08434\roadway\sheets\BridgePlans\Sheets\08434RE001.dwg - Removal Details
Modified / By: May 7, 2014 10:29:19 AM / beth_dollboa
Plotted / By: May 7, 2014 10:52:12 AM / Dollboa, Beth

NOTES:

1. SEE SHEETS 1/8 & 2/8 FOR GENERAL NOTES AND ESTIMATED QUANTITIES.
2. SEE SHEET 7/8 FOR SECTION B–B, E–E AND F–F.
3. SEE SHEET 7/8 FOR WINGWALL 2 DETAILS.

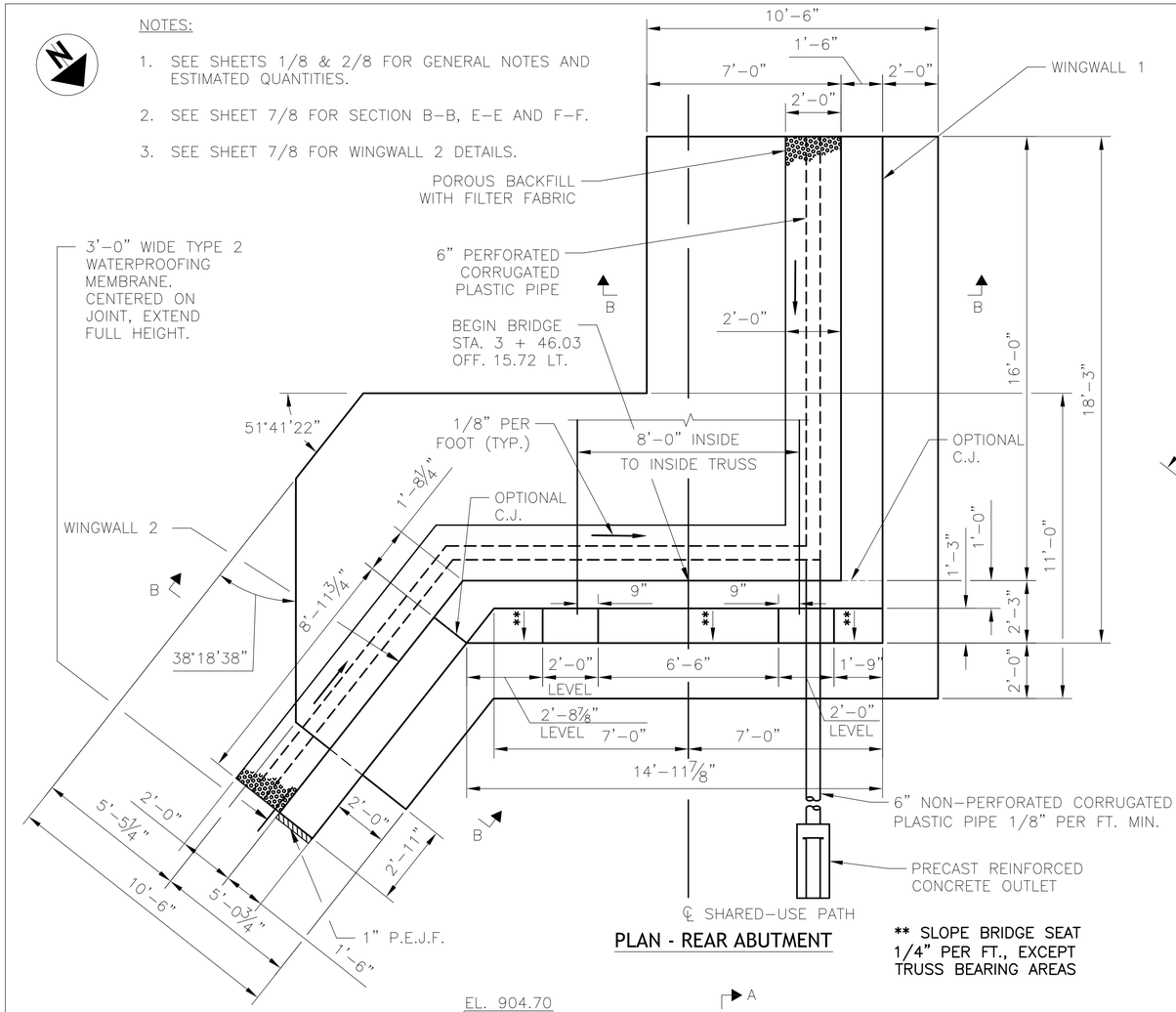

PLAN - REAR ABUTMENT

** SLOPE BRIDGE SEAT 1/4" PER FT., EXCEPT TRUSS BEARING AREAS

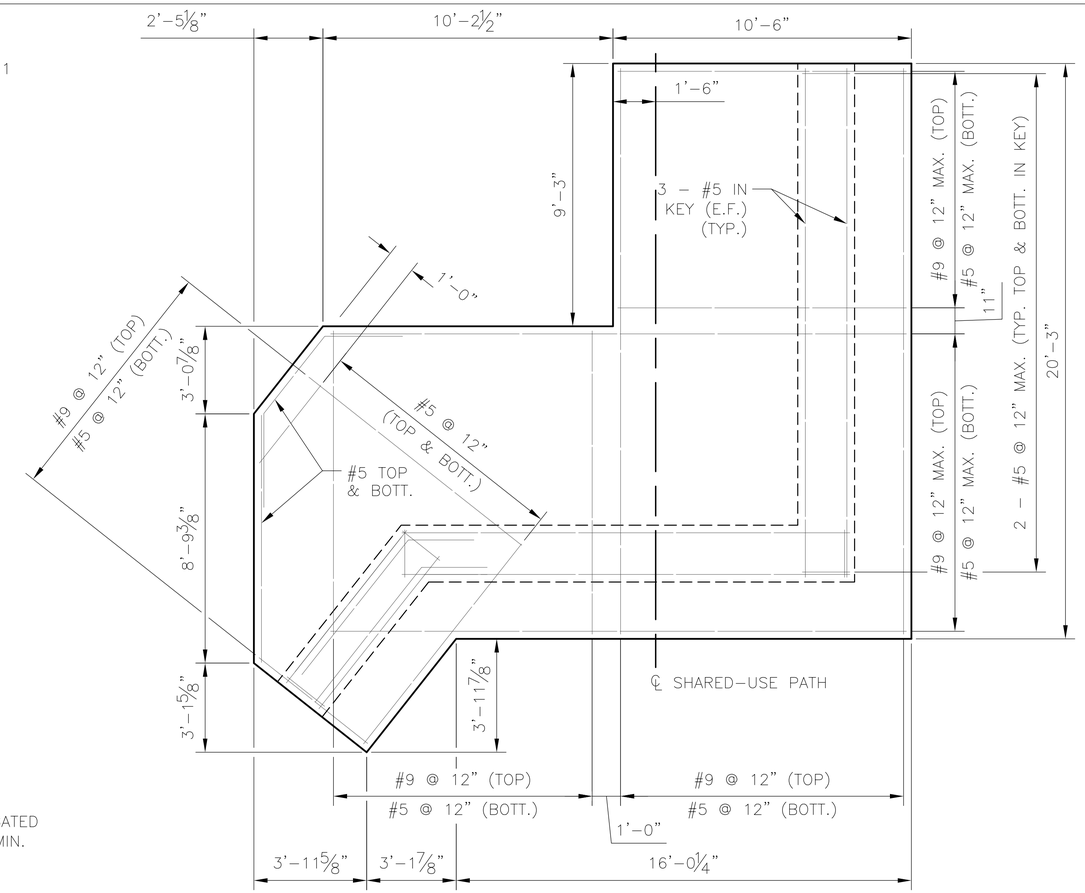

FOUNDATION PLAN

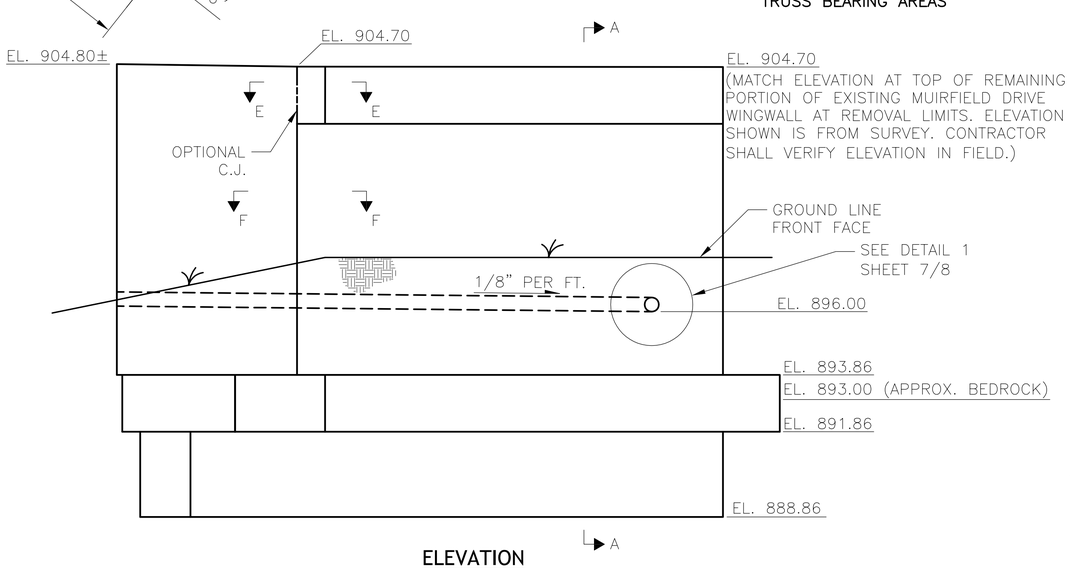

ELEVATION

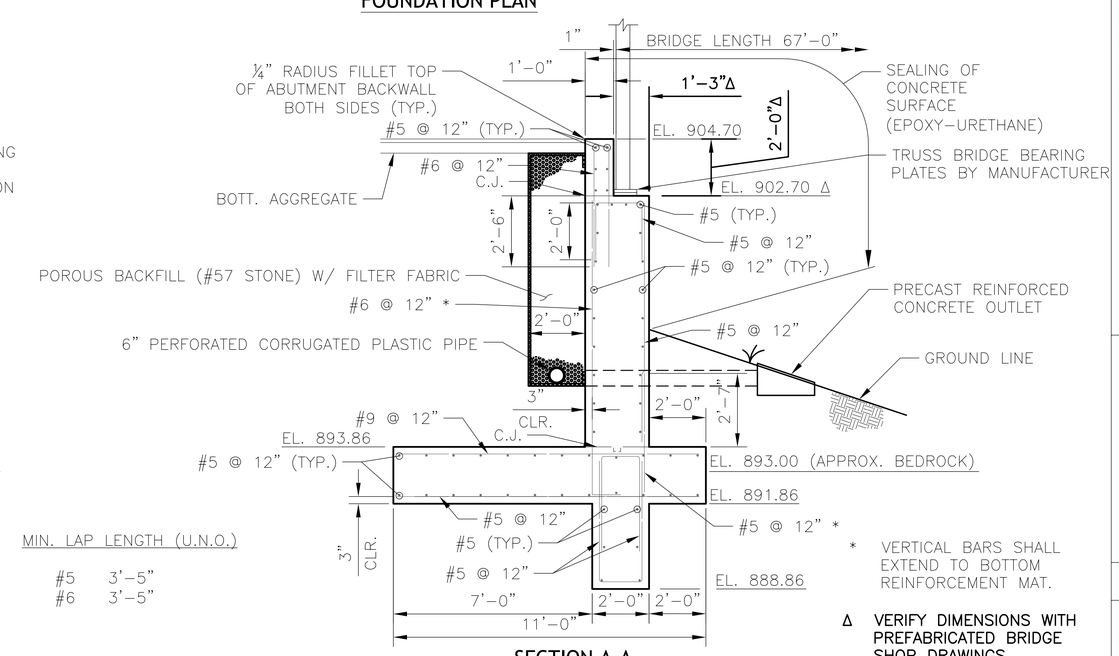

MIN. LAP LENGTH (U.N.O.)

#5	3'–5"
#6	3'–5"

* VERTICAL BARS SHALL EXTEND TO BOTTOM REINFORCEMENT MAT.

Δ VERIFY DIMENSIONS WITH PREFABRICATED BRIDGE SHOP DRAWINGS

SECTION A-A

DESIGN AGENCY
RWARMSTRONG.
471 E. BROAD ST., SUITE 2010
COLUMBUS, OH 43215

DESIGNED	DRAWN	REVIEWED	DATE
ALM	ALM	FRR	06/2013
CHECKED	REVISED	STRUCTURE FILE NUMBER	
JNS		N/A	

REAR ABUTMENT DETAILS

PEDESTRIAN BRIDGE OVER NORTH FORK INDIAN RUN ALONG SOUTHBOUND MUIRFIELD DRIVE

MUIRFIELD DRIVE / NORTH FORK INDIAN RUN PEDESTRIAN BRIDGES

5 / 8

28 / 31

File Name: L:\Projects\14578434\TRANSIFRA\08434\roadway\sheets\BridgePlans\Sheets\08434AR001.dwg - Rear Abutment Details
Modified / By: May 8, 2014 9:31:58 AM / beth_dollboa
Plotted / By: May 8, 2014 9:47:35 AM / Dollboa, Beth

NOTES:

1. SEE SHEET 1/8 & 2/8 FOR GENERAL NOTES AND ESTIMATED QUANTITIES.
2. SEE SHEET 7/8 FOR SECTION B–B, C–C AND D–D.
3. SEE SHEET 7/8 FOR WINGWALL 2 DETAILS.

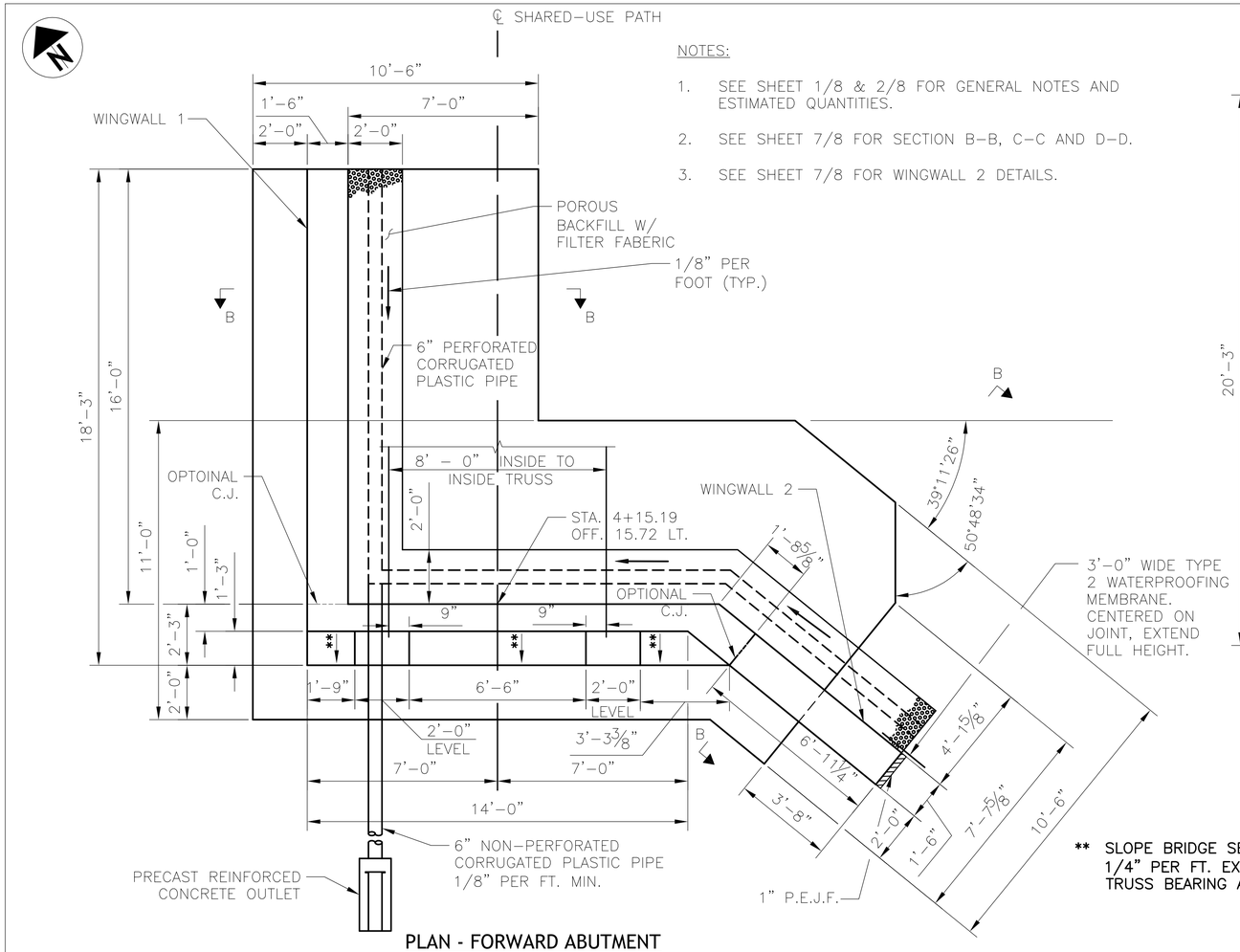

** SLOPE BRIDGE SEAT 1/4" PER FT. EXCEPT TRUSS BEARING AREAS

PLAN - FORWARD ABUTMENT

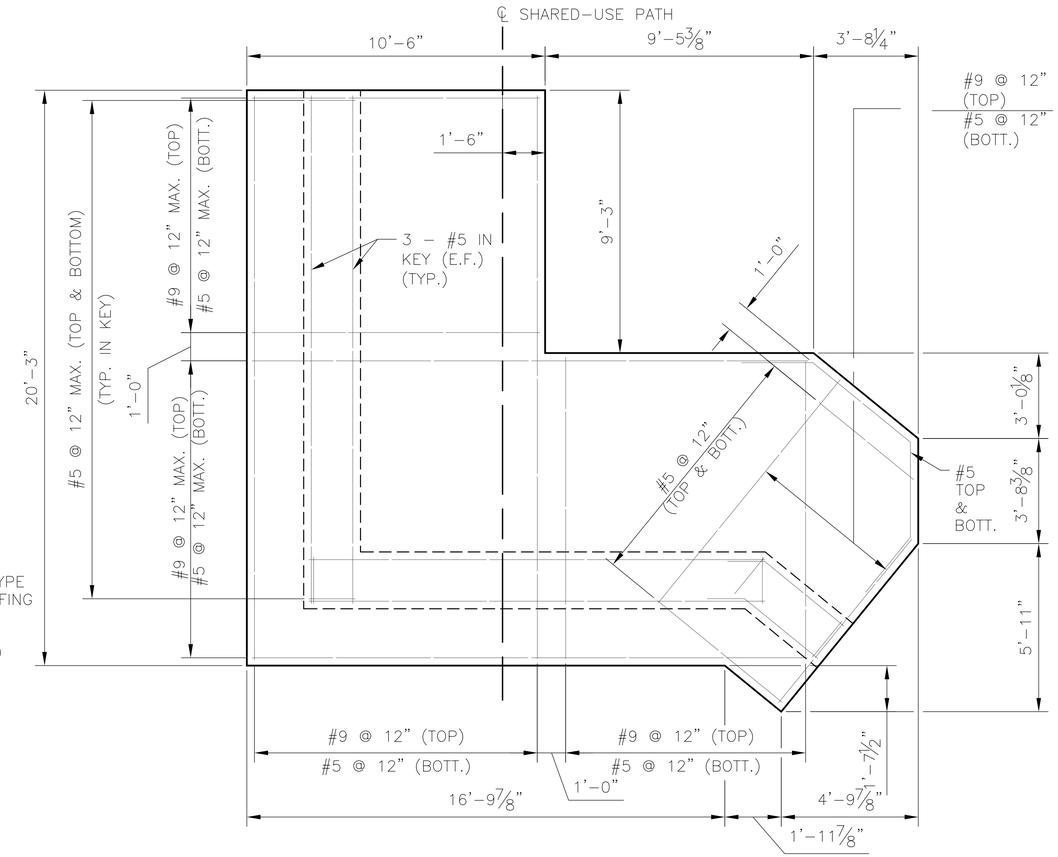

FOUNDATION PLAN

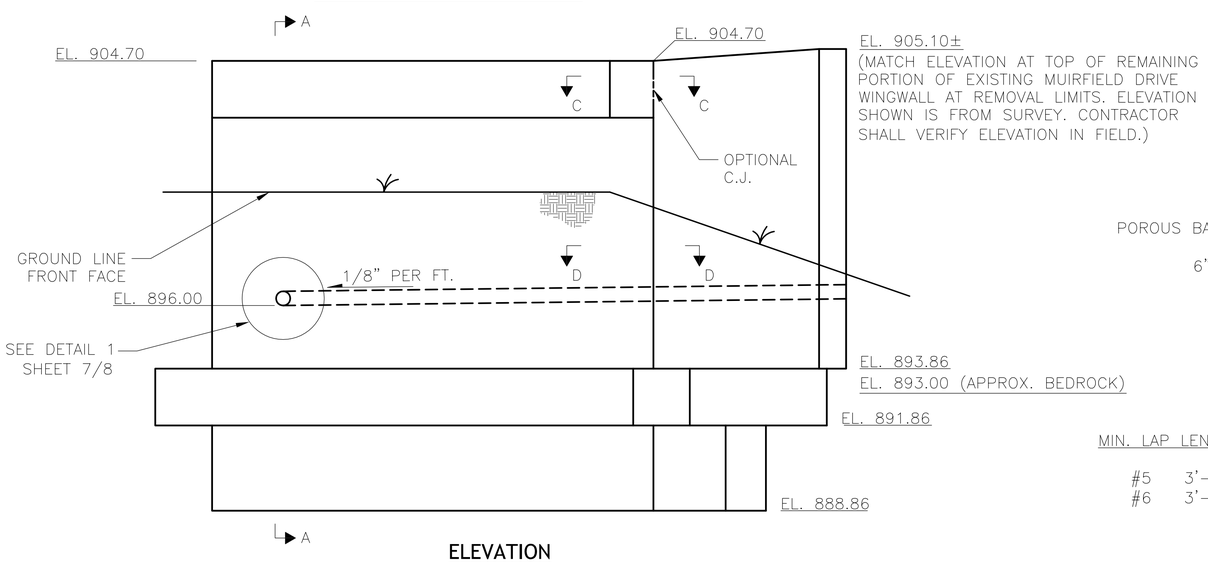

ELEVATION

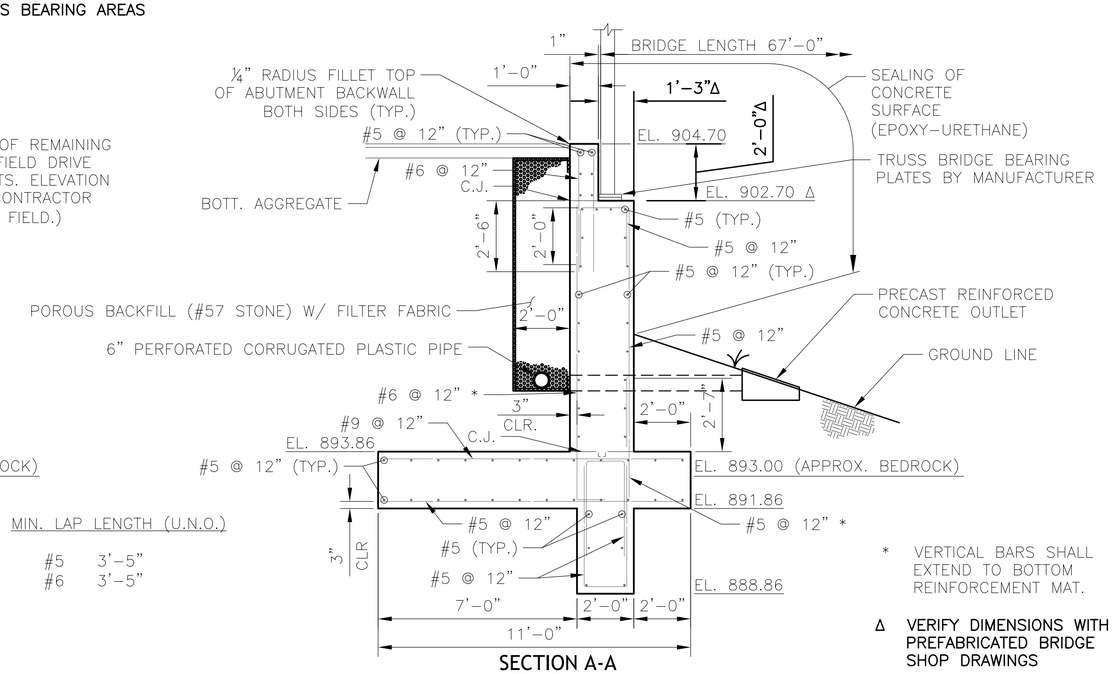

SECTION A-A

MIN. LAP LENGTH (U.N.O.)

#5	3'–5"
#6	3'–5"

* VERTICAL BARS SHALL EXTEND TO BOTTOM REINFORCEMENT MAT.

Δ VERIFY DIMENSIONS WITH PREFABRICATED BRIDGE SHOP DRAWINGS

DESIGN AGENCY
RW ARMSTRONG
471 E. BROAD ST., SUITE 2010
COLUMBUS, OH 43215

DESIGNED	DRAWN	REVIEWED	DATE
ALM	ALM	FRR	06/2013
CHECKED	REVISED	STRUCTURE FILE NUMBER	
JNS		N/A	

FORWARD ABUTMENT DETAILS

PEDESTRIAN BRIDGE OVER NORTH FORK INDIAN RUN ALONG SOUTHBOUND MUIRFIELD DRIVE

MUIRFIELD DRIVE / NORTH FORK INDIAN RUN PEDESTRIAN BRIDGES

6 / 8

29 / 31

File Name: L:\Projects\14578434\TRANSIT\FRA\08434\roadway\sheets\BridgePlans\Sheets\08434AR001.dwg - Forward Abutment Details
Modified / By: May 8, 2014 9:52:13 AM / beth_doliboa
Plotted / By: May 20, 2014 4:16:42 PM / Doliboa, Beth

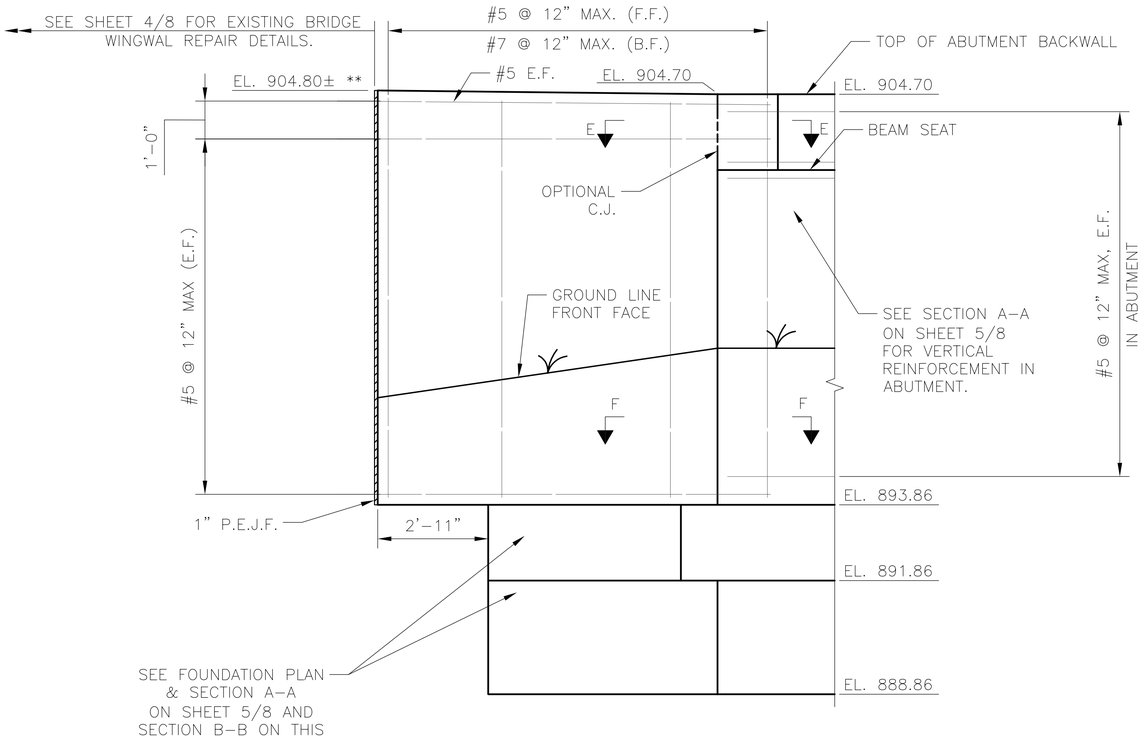

ELEVATION - WINGWALL 2 (REAR ABUTMENT)

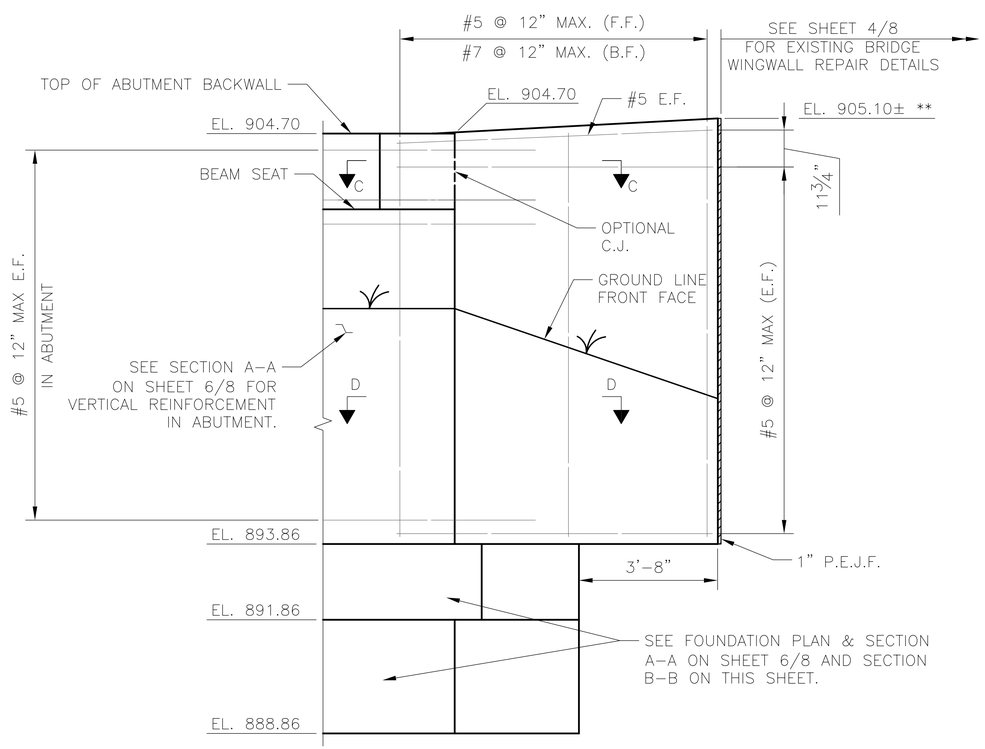

ELEVATION - WINGWALL 2 (FORWARD ABUTMENT)

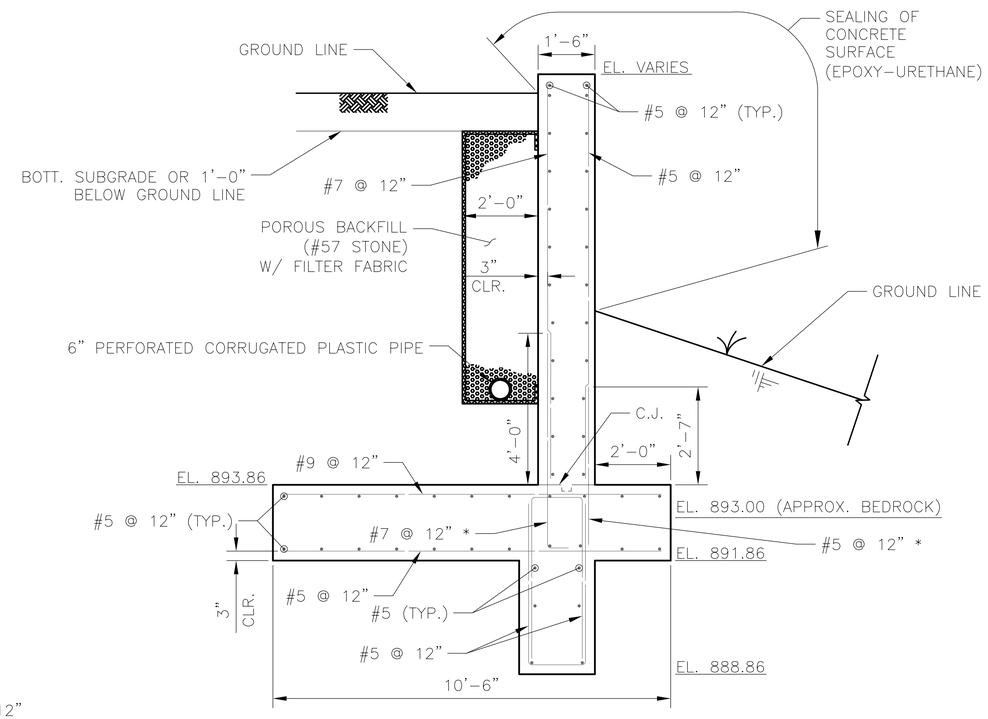

SECTION B-B

* VERTICAL BARS SHALL EXTEND TO BOTTOM REINFORCEMENT MAT.

** MATCH ELEVATION AT TOP OF REMAINING PORTION OF EXISTING MUIRFIELD DRIVE WINGWALL AT REMOVAL LIMITS. ELEVATIONS SHOWN ARE FROM SURVEY. CONTRACTOR SHALL VERIFY ELEVATIONS IN FIELD.

MIN. LAP LENGTH (U.N.O.)

#5	3'-5"
#7	3'-8"

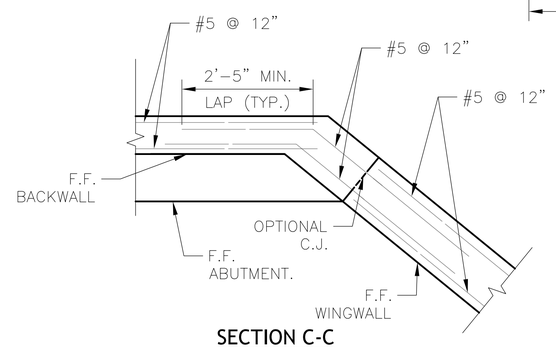

SECTION C-C

(SECTION E-E SIMILAR)
NOTE: VERTICAL REINFORCEMENT NOT SHOWN.

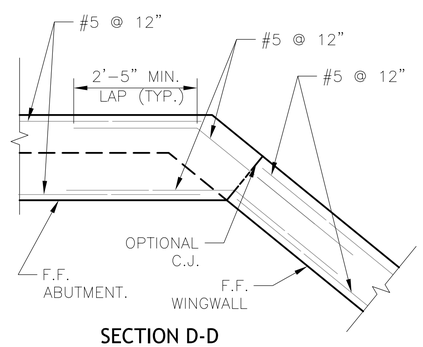

SECTION D-D

(SECTION F-F SIMILAR)
NOTE: VERTICAL REINFORCEMENT NOT SHOWN.

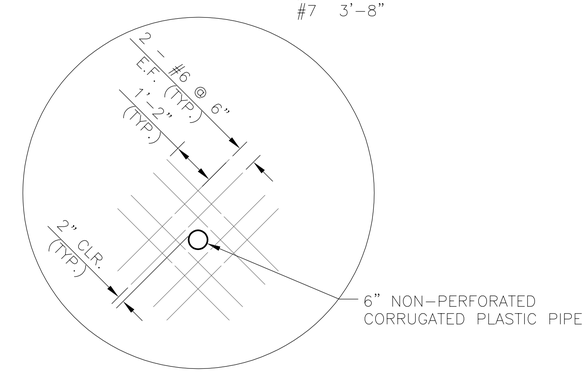

DETAIL 1
ADDITIONAL REINFORCEMENT

NOTE:

1. SEE SHEETS 1/8 & 2/8 FOR GENERAL NOTES AND ESTIMATED QUANTITIES.

DESIGN AGENCY
RW ARMSTRONG
471 E. BROAD ST., SUITE 2010
COLUMBUS, OH 43215

DESIGNED	DRAWN	REVIEWED	DATE
ALM	ALM	FRR	06/2013
CHECKED	REVISED	STRUCTURE FILE NUMBER	
JNS		N/A	

WINGWALL DETAILS
PEDESTRIAN BRIDGE OVER NORTH FORK INDIAN RUN ALONG SOUTHBOUND MUIRFIELD DRIVE

MUIRFIELD DRIVE / NORTH FORK INDIAN RUN PEDESTRIAN BRIDGES

7 / 8

30 / 31

File Name: L:\Projects\145784\34\TRANS\FRA\08434\roadway\sheets\BridgePlans\Sheets\08434AR001.dwg - Foundation & Wingwall Details
Modified / By: May 7, 2014 10:29:55 AM / beth_dolboa
Plotted / By: May 7, 2014 10:46:54 AM / Dolboa, Beth

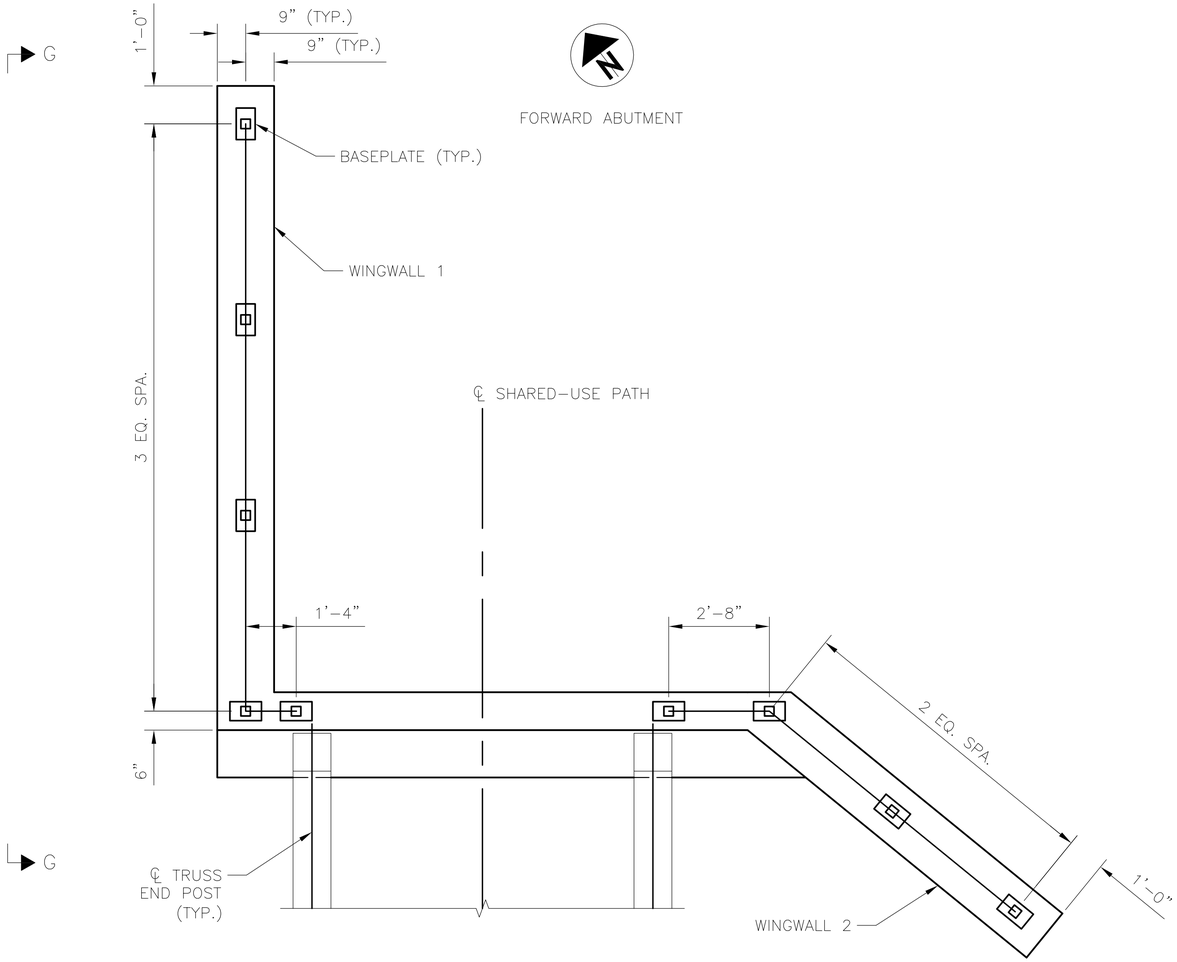

RAILING PLAN

(FORWARD ABUTMENT SHOWN, REAR ABUTMENT SIMILAR)

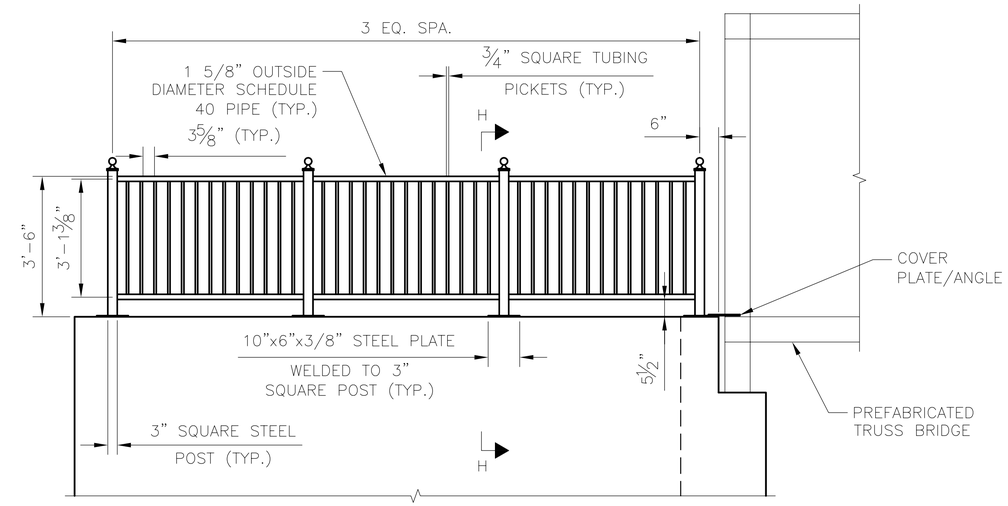

SECTION G-G

(PROPOSED GRADE NOT SHOWN FOR CLARITY)
(WINGWALL 1 SHOWN, WINGWALL 2 SIMILAR)

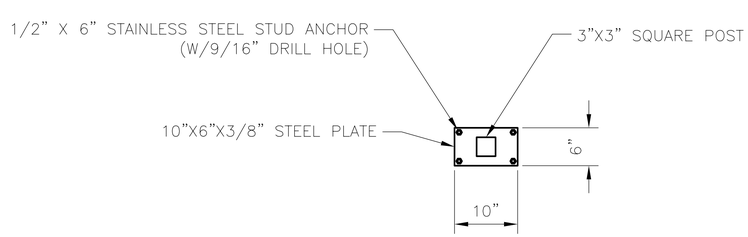

POST SUPPORT BASE PLATE PLAN

(TYP. AT EACH POST)

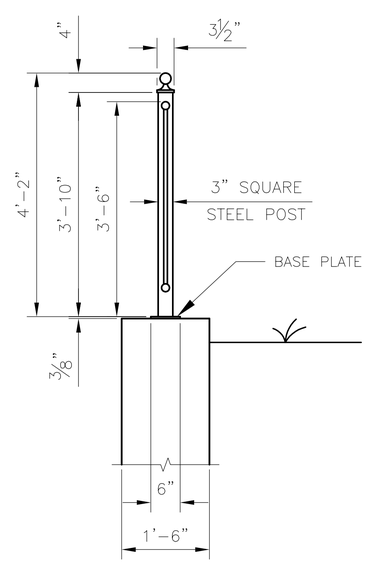

SECTION H-H

RAILING DETAIL

NOTES:

1. ALL RAILING MATERIAL SHALL BE HOT DIPPED GALVANIZED AND POWDER COATED BLACK.
2. PIPE RAIL SHALL BE ASTM A53, TYPE E OR S GRADE B OR ASTM A501 GRADE B. SQUARE TUBES SHALL BE ASTM A500 GRADE B OR ASTM A501.
3. EACH POST SHALL BE WELDED TO A 10"x6"x3/8" STEEL PLATE PRIOR TO GALVANIZING AND PAINTING. THAT PLATE ASSEMBLY SHALL THEN BE ANCHORED TO THE TOP OF THE WINGWALL WITH 4-1/2"x6" STAINLESS STEEL STUDS AND BOLTS.
4. WELDING SHALL BE IN ACCORDANCE WITH ANSI/AWS D1.1, STRUCTURAL WELDING CODE.
5. ALL LABOR, MATERIALS, EQUIPMENT AND INCIDENTALS NECESSARY TO FABRICATE, GALVANIZE, PAINT, AND INSTALL THE METAL RAILING SHALL BE INCLUDED IN THE PER FOOT QUANTITY, ITEM SPECIAL, RAILING (42" HIGH METAL RAILING).
6. POST SPACING SHALL NOT EXCEED 7'-0".
7. FABRICATE AND INSTALL APPROXIMATELY 50' OF 42" HIGH GUARD RAIL CONSTRUCTED OF 1¼" SCHEDULE 40 HANDRAIL PIPE FOR HORIZONTALS, ¾" SQUARE SOLID PICKETS, NO MORE THAN 4¾" ON CENTER, 3"x3" SUPPORT POST WITH BALL CAPS AND 6"x10"x⅜" BASE PLATES. ALL MATERIAL HOT-DIPPED GALVANIZED AND POWDER COATED BLACK, ALL RAILINGS MOUNTED WITH ½"x4" WEDGE ANCHORS, STAINLESS STEEL HARDWARE.

DESIGN AGENCY
RW ARMSTRONG
471 E. BROAD ST., SUITE 2010
COLUMBUS, OH 43215

DESIGNED	DRAWN	REVIEWED	DATE
ALM	ALM	FRR	06/2013
CHECKED	REVISED	STRUCTURE FILE NUMBER	
JNS		N/A	

RAILING DETAILS
PEDESTRIAN BRIDGE OVER NORTH FORK INDIAN RUN ALONG SOUTHBOUND MUIRFIELD DRIVE

MUIRFIELD DRIVE / NORTH FORK INDIAN RUN PEDESTRIAN BRIDGES

File Name: L:\Projects\14578434\TRANS\FRA\08434\roadway\sheets\BridgePlans\Sheets\08434AR001.dwg - Railing Detail
Modified / By: May 8, 2014 9:52:13 AM / beth_dolibosa
Plotted / By: May 20, 2014 4:19:53 PM / Dolibosa, Beth