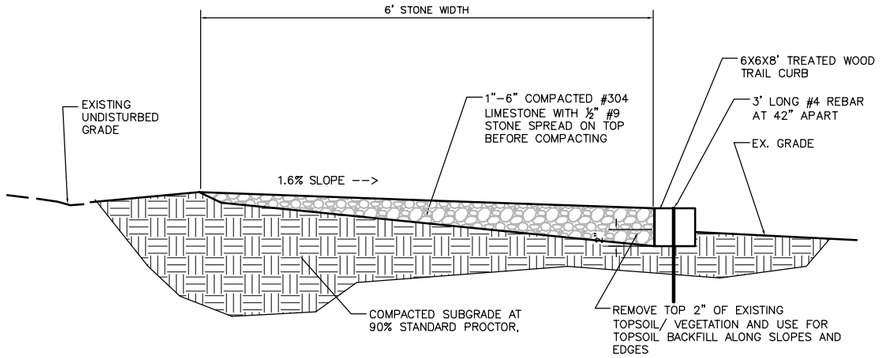

A GRAVEL TRAIL AND 6X6 WOOD EDGE

NOT TO SCALE

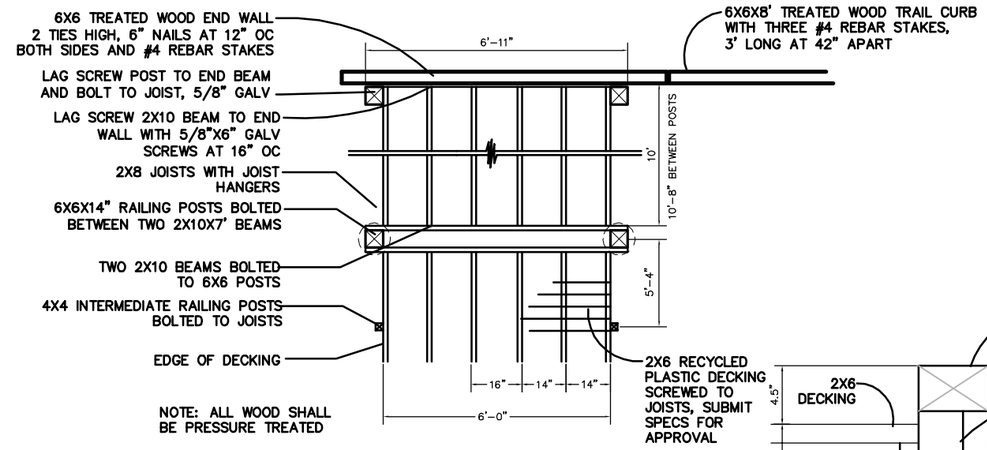

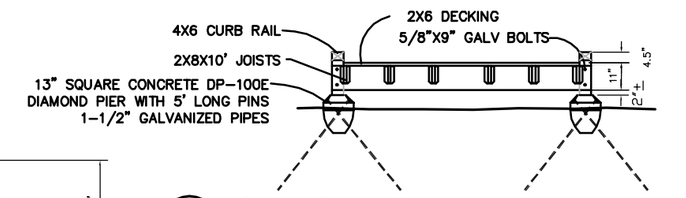

B 6' X 52' BOARDWALK AND FOOTINGS

1" = 4'

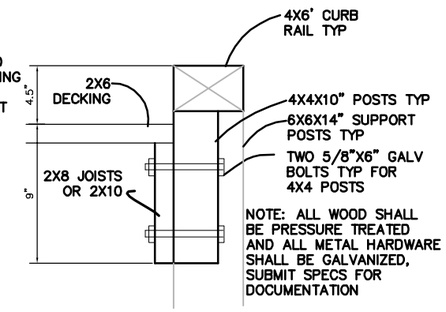

C CURB RAIL SECTION

SCALE 2" = 1'

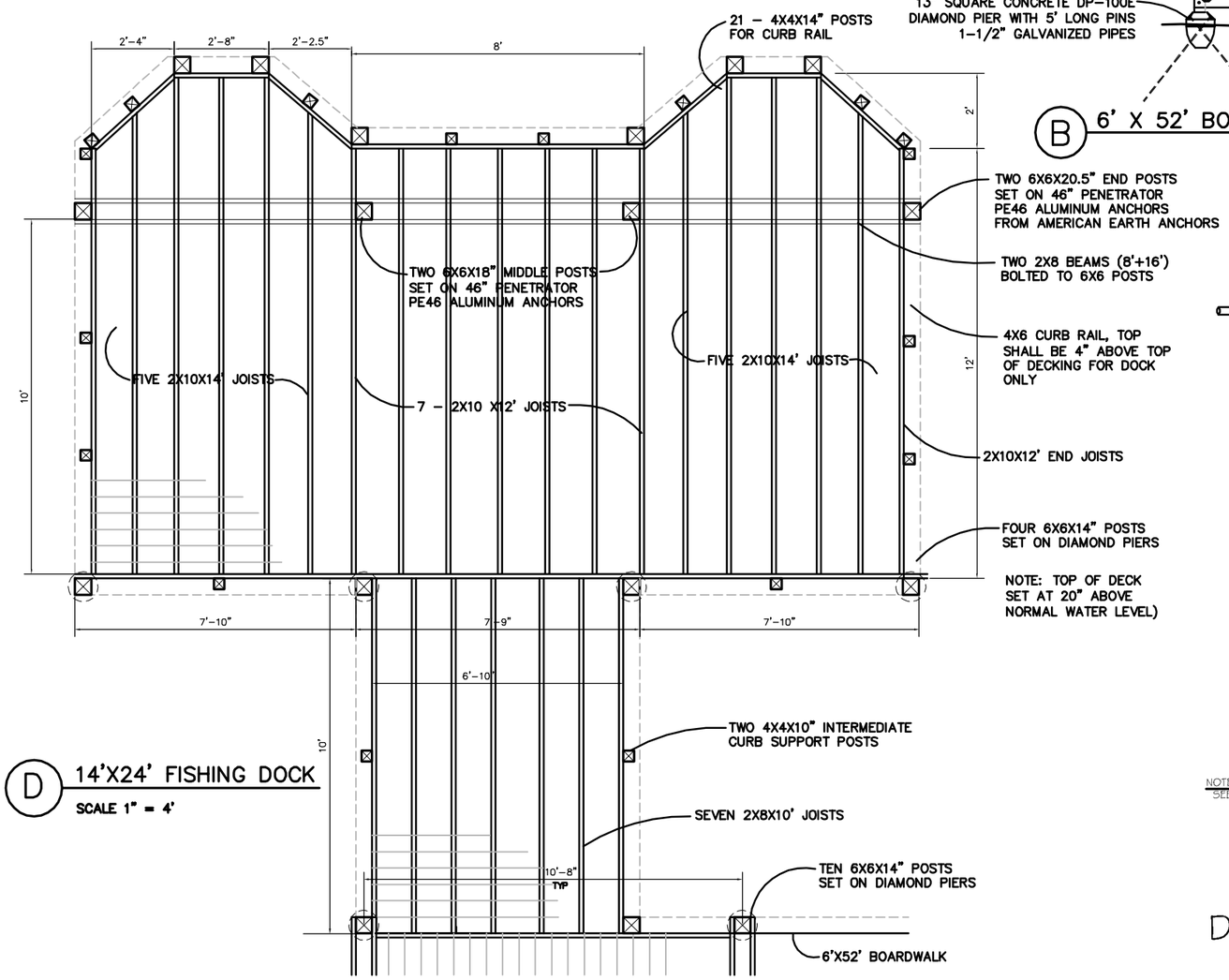

D 14'X24' FISHING DOCK

SCALE 1" = 4'

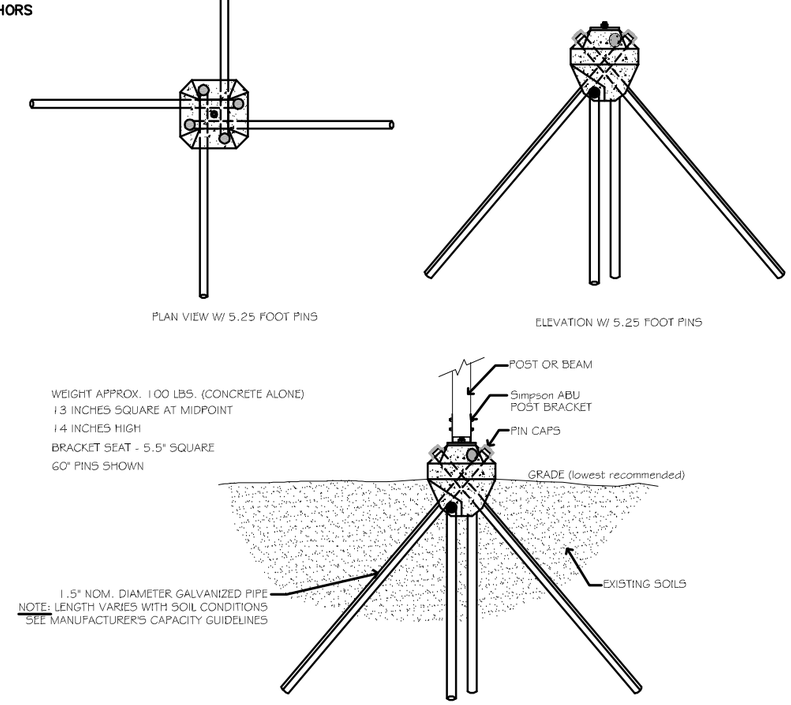

DIAMOND PIER™ DP-100

CITY OF DUBLIN

DIVISION OF PARKS & OPEN SPACE
6555 SHIER-RINGS ROAD
DUBLIN, OHIO 43016
PH (614) 410-4700
FAX (614) 761-6512

ECO–DESIGN & ENGINEERING, LTD
7700 Wells Road
Plain City, Ohio 43064
Phone / FAX (614) 733-0049

BRANDON PARK FISHING DOCK

BRANDONWAY DRIVE
DUBLIN, OHIO 43017

DATE: 8/27/4	SCALE:
DRAWN BY: SES	SHEET NUMBER C4

DETAILS