BRANDON PARK FISHING DOCK

6' GRAVEL TRAIL, BOARDWALK, AND DOCK

BRANDONWAY DRIVE, DUBLIN, OHIO 43017

LOCATION MAP 1" = 600'

GENERAL QUANTITIES

ITEM	QUAN.	UNIT	DESCRIPTION
BASE BID			
207	50	LF	TEMP 8" STRAW WATTLES BELOW DISTURBED AREAS
201	50	LF	CLEARING BRUSH FOR TRAIL
651	80	LF	STRIP 2" TOPSOIL AND STOCKPILE ALONG TRAIL EDGES
203	80	LF	GRADE AND COMPACT FOR TRAIL AND TRAIL EDGE
521	80	LF	6'X6' TREATED WOOD TRAIL EDGE PLACE AND REBAR
304	50	SY	PLACE AND COMPACT 6" WELL GRADED STONE TRAIL (10 TN)
304	10	SY	PLACE AND COMPACT STONE RAMP (6 TN)
652/203	80	LF	RESPREAD TOPSOIL AND FINE GRADE DISTURBED AREAS
659	80	LF	FESCUE SEED DISTURBED TRAIL EDGES 5' WIDTH
507	4	EA	INSTALL ALLUMINUM PE46 AMERICAN EARTH ANCHORS
521	1	EA	INSTALL 8X6X8' ENDWALL
507	14	EA	INSTALL DIAMOND PIER DP-100 PIERS
521	52	LF	CONSTRUCT 8' WIDE WOOD BOARDWALK WITH CURB RAIL
521	363	SF	CONSTRUCT 14'X24' FISHING DOCK WITH CURB RAIL

GENERAL NOTES

1. City of Columbus and Ohio Department of Transportation Construction and Material Specifications. current editions, and any supplements thereto (hereafter referred to as Standard Specifications), shall govern all construction items unless otherwise noted. If a conflict between specifications is found, the more strict specification will apply as decided by the Parks and Open Space Director. Item Numbers listed refer to City of Columbus Item Numbers unless otherwise noted.
2. The Parks and Open Space Director will not be responsible for means, methods, procedures, techniques, or sequences of construction that are not specified herein. The Parks and Open Space Director will not be responsible for safety on the work site, or for failure by the Contractor to perform work according to contract documents.
3. The Contractor shall be responsible to obtain all necessary permits including but not limited to Ohio EPA Permits to install (PTI) and Notices of Intent (NOI), Building Permits, etc.
4. The Contractor shall notify the City of Dublin Division of Parks and Open Space in writing at least 3 working days prior to beginning construction.
Division of Parks and Open Space
City of Dublin
6555 Shier Rings Road
Dublin. Ohio 43016
5. The Contractor shall be solely responsible for complying with all federal, state and local safety requirements including the Occupational Safety and Health Act of 1970. The Contractor shall exercise precaution always for the protection of persons (including employees) and property. It shall also be the sole responsibility of the Contractor to initiate, maintain and supervise all safety requirements, precautions and programs in connection with the work, including the requirements for confined spaces per 29 CFR 1910.146.
6. Following completion of construction of the site improvements and before requesting occupancy, a proof survey shall be provided by the Contractor to the Division of Parks and Open Space that documents "as-built" elevations, dimensions, slopes and alignment of all elements of this project. The proof survey shall be prepared, signed and submitted by a Registered Professional Surveyor and checked by the Professional Engineer who sealed the construction drawings.
7. Deleted
8. The Contractor shall carefully preserve bench marks, property corners, reference points, stakes and other survey reference monuments or markers. In cases of willful or careless destruction, the Contractor shall be responsible for restorations. Resetting of markers shall be performed by an Ohio Professional Surveyor as approved by the Parks and Open Space Director.
9. Non-rubber tired vehicles shall not be moved on or across public streets or highways without the written permission of the Parks and Open Space Director.
10. The Contractor shall restore all disturbed areas to equal or better condition than existed before construction. Drainage ditches or water courses that are disturbed by construction shall be restored to the grades and cross-sections that existed before construction.
11. Tracking or spilling mud, dirt or debris upon streets, residential or commercial drives, sidewalks or bike paths is prohibited according to Section 97.38 of Dublin Code of Ordinances. Any such occurrence shall be cleaned up immediately by the Contractor at no cost to the City. If the Contractor fails to remove said mud, dirt, debris, or spillage, the City reserves the right to remove these materials and clean affected areas. The cost of which shall be the responsibility of the Contractor.
12. Disposal of excess excavation within Special Flood Hazard Areas (100-year floodplain) may not be permitted without express written consent of the City Engineer. In any case, no disposal will be permitted within twenty feet of floodway boundaries.
13. All signs, landscaping, structures or other> appurtenances within right-of-way disturbed or damaged during construction shall be replaced or repaired to the satisfaction of the City Engineer. The cost of this work shall be the responsibility of the Contractor.
14. All field tile broken or encountered during excavation shall be noted on the "as-built" survey, replaced or repaired, and connected to the public storm sewer system as directed by the Parks and Open Space Director. The cost of this work shall be the responsibility of the Contractor .
15. All precast concrete products shall be inspected at the location of manufacture. Approved precast concrete products will be stamped or have such identification noting that inspection has been conducted by the City of Columbus. Precast concrete products without proof of inspection shall not be approved for installation.
16. Backfill within a 1:1 influence line of existing structures (houses, garages. etc.) or public infrastructure (pavement, curbs, sidewalks, bikepaths, etc.) shall be granular backfill according to Item 912 of the Standard Specifications or Flowable CDF, Type III according to Item 636. Item 911 of the Standard Specifications may be used elsewhere.
17. Deleted
18. All trenches within public right-of-way shall be backfilled according to the approved construction drawings or securely plated during nonworking hours. Trenches outside these areas shall be backfilled or shall be protected by approved temporary fencing or barricades during nonworking hours. Clean up shall follow closely behind the trenching operation.
19. All trees within the construction area not specifically designated for removal shall be preserved, whether shown or not shown on the approved construction drawings. Trees to be preserved shall be protected with high visibility fencing placed a minimum 15 feet from the tree trunk. Trees 6-inches or greater at DBH (Diameter Breast Height) must be protected with fencing placed at the critical root zone or 15 feet, whichever is greater. Trees not indicated on the approved construction drawings for removal may not be removed without prior approval of the Division of Parks and Open Space.
20 Conduit must be directionally bored across streets instead of open cut, unless specifically approved by the Parks and Open Space Director. Use of pneumatic air ram devices is not permitted. Permits to construct in the right-of-way of existing streets must be obtained from the City of Dublin Division of Engineering before commencing construction. Should open-cutting of existing pavement be permitted, Controlled Density Backfill (Type III) shall be used in place of compacted granular backfill, according to Item 636 of the Standard Specifications.
21. The Contractor shall be responsible for the condition of trenches within the right-of-way and public easements for a period of one year from the final acceptance of the work, and shall make any necessary repairs at no cost to the City.
22. Pavements shall be cut in neat, straight lines the full depth of the existing pavement, or as required by the Parks and Open Space Director. Pavement replacement shall be conducted according to City of Columbus Standard Drawing 1441 Dr. A and applicable City of Dublin standard drawings. The replacement of driveways, handicapped ramps, sidewalks. bike paths, parking lot pavement, etc. shall be provided according to the approved construction drawings and City of Dublin standard construction drawings.
23. Tree trimming within the construction zone is to be completed by a certified Arborist. At the completion of the project, the Arborist is to return and trim any broken branches as needed.
24. Any modification to the work shown on drawings must have prior written approval by the Parks and Open Space Director, City of Dublin.
25. Deleted
26. All disturbed areas within the Limit of Work shall be fine-graded in preparation of seeding and seeded with the following mixture:
Premier Blend (stock blend) – 80/20 Bluegrass/Rye, all varitetes must be in the top 10 NTEP evaluations. Germination Rate 90%
Application Rate: 7 lbs per 1000 sq ft as directed by City of Dublin Parks and Open Space
The contractor shall confirm the above seed mix with the City of Dublin, Grounds and Facilities. Any disturbed areas outside the Limit of Work shall be fine graded and seeded by the Contractor with the above seed mix.
27 Deleted
28 Deleted

BENCHMARK DATA – Horizontal NAD 83,
Vertical NAVD 88

SHEET INDEX

SHEET	TITLE
C-1	COVER SHEET AND NOTES
C-2	GENERAL NOTES CONT.
C-3	LAYOUT PLANS
C-4	DETAILS

STANDARD CONSTRUCTION DRAWINGS
CITY OF DUBLIN
BIKE PATH (STANDARD) - RD-06

CITY OF COLUMBUS

Scott E Sonnenberg, PE #63086

CITY OF DUBLIN

DIVISION OF
PARKS & OPEN SPACE
6555 SHIER-RINGS ROAD
DUBLIN, OHIO 43016
PH (614) 410-4700
FAX (614) 761-6512

ECO-DESIGN & ENGINEERING, LTD
7700 Wells Road
Plain City, Ohio 43064
Phone / FAX (614) 733-0049

BRANDON
PARK
FISHING DOCK

BRANDONWAY DRIVE
DUBLIN, OHIO 43017

DATE:	SCALE:
8/27/14	1" = 600'
DRAWN BY:	SHEET NUMBER
SES	C1

COVER SHEET

GENERAL NOTES CONT.

UTILITIES

1. The following Utilities are known to be located within the limits of this project:
   Columbus and Southern Electric Power
   Columbia Gas
2. The Contractor shall give Notice of Intent to construct to Ohio Utilities Protection Service (telephone number 800-362-2764), Producer's Underground Protection Service (telephone number 614-587-0486), and to owners of underground utilities that are not members of a registered underground protection service. Notice shall be given of at least 2 working days before start of construction.
3. The Identity and locations of existing underground utilities in the construction area have been shown on the approved construction drawings as accurately as provided by the owner of the underground utility. The City of Dublin and the Parks and Open Space Director assumes no responsibility for the accuracy or depths of underground facilities shown on the approved construction drawings. If damage is caused, the Contractor shall be responsible for repair of the same and for any resulting contingent damage.
4. Location, support, protection and restoration of all existing utilities and appurtenances, whether shown or not shown on the approved construction drawings, shall be the responsibility of the Contractor.
5. When unknown or incorrectly located underground utilities are encountered during construction, the Contractor shall immediately notify the Parks and Open Space Director.
6. Deleted

EROSION AND SEDIMENT CONTROL

1. The Contractor or Developer is responsible for submitting a Notice of Intent (NOI) to be reviewed and approved by the Ohio EPA. The NOI must be submitted to OEPA 21 days prior to the start of construction and may entitle coverage under the Ohio EPA General Permit for Stormwater Discharges associated with construction activity. A project location map must be submitted with the NOI. A sediment and erosion control plan must be submitted to the Director of Grounds and Facilities for approval if a sediment and erosion control plan has not already been included with the approved construction drawings. This plan must be made available at the project site at all times. The design of erosion control systems shall follow the requirements of Ohio EPA, Item 207 of Ohio Department of Transportation Standard Specifications, and the Director of Grounds and Facilities. An individual NPDES Stormwater Discharge Permit may be required. The Contractor shall be considered the permitte.
2. The Contractor shall provide sediment control at all points where storm water runoff leaves the project, including waterways, overland sheet flow, and storm sewers.
3. Accepted methods of providing erosion/sediment control include but are not limited to: sediment basins, silt filter fence, aggregate check dams, and temporary ground cover. Hay or straw bales are not permitted.
4. The Contractor shall provide adequate drainage of the work area at all times consistent with erosion control practices.
5. Disturbed areas that will remain unworked for 30 days or more shall be seeded or protected within seven calendar days of the disturbance. Other sediment controls that are installed shall be maintained until vegetative growth has been established. The Contractor shall be responsible for the removal of all temporary sediment devices at the conclusion of construction but not before growth of permanent ground cover.

SANITARY SEWERS – **Deleted.**

WATER LINE – Deleted

STORM SEWER

1. All storm water detention and retention areas and major flood routing swales shall be constructed to finish grade and hydro–seeded and hydro–mulched according to Items 203 and 659 of the Standard Specifications.
2. Where private storm sewers connect to public storm sewers, the last run of private storm sewer connecting to the public storm sewer shall be Reinforced Concrete Pipe conforming to ASTM Designation C76, Wall B, Class IV for pipe diameters 12 inches to 15 inches, Class III for 18 inches to 24 inch pipes, and 27 inches and larger pipe shall be Class II, unless otherwise shown on the approved construction drawings. Inspection is required by the City of Dublin's Division of Engineering.
3. Granular backfill shall be compacted granular material according to Item 912 of the Standard Specifications or Controlled Density Backfill according to Item 636, Type III of the Standard Specifications as directed by the City Engineer.
4. All storm sewers shall be Reinforced Concrete Pipe conforming to ASTM Designation C76, Wall B, Class IV for pipe diameters 12 inches to 15 inches, Class III for 18 inches to 24 inch pipes, and 27 inches and larger pipe shall be Class II, unless otherwise shown on the approved construction drawings.
5. Headwalls and endwalls shall be required at all storm sewer inlets or outlets to and from stormwater management facilities. Natural stone and/or brick approved by the City Engineer shall be provided on all visible headwalls and/or endwalls surfaces.
6. Storm inlets or catch basins shall be channelized and have bicycle safe grates. Manhole lids shall include City of Dublin logo and all curb inlet and catch basin grates shall indluce engraved lettering: "DUMP NO WASTE; DRAINS TO RIVER."
7. Storm sewer outlets greater than 18 inches in diameter accessible from stormwater management facilities or watercourses shall be provided with safety grates, as approved by the City Engineer.

TRAFFIC CONTROL – Deleted

BLASTING – Deleted

MAIL DELIVERY – Deleted

USE OF FIRE HYDRANTS – Deleted

GENERAL SWPPP NOTES

1. Nature of Construction - the existing site consists of an 18.5 acre mostly forested site with existing asphalt paths and a small pond with a CN of 70-74. Work to be included under this plan consists of stripping of topsoil and stockpiling for a trail, a new boardwalk, a fishing dock, spreading topsoil, Installation of pollution prevention measures, and stabilization of all disturbed areas during and after the construction. Total disturbed area 0.1 acres and a developed CN of 70-74. The site drains into the Scioto River. The soils consist of Blount silt loam soils, type C with a 43 erosion k factor.
2. The contractor shall be responsible for protection of all utilities and damages as a result of his work. The contractor shall notify the Ohio Utilities Protection Services at least 2 working days prior to any digging (800) 362-2764.
3. The contractor shall be responsible for obtaining all local permits and associated permit fees required for the construction. The Contractor may need to file the Notice of Intent NOI as required for the NPDES general permit for construction activities and is responsible for following the permit, submittal of a CoPermittee Notice of Intent for all required subcontractors, Inspections and recording of inspection reports every 7 days and within 24 hours after any rainfall event greater than 1/2 inch. All inspection records shall be kept for 3 years after submittal of the Notice of Termination NOT within 45 days of final stabilization.
4. The contractor shall be responsible for all safety precautions related to the construction.
5. Any stockpile areas shall be compacted to 85% Standard Proctor to minimize erosion potential and stabilize the surface unless respread within 7 days.
6. The contractor shall be responsible for coordination of soil or material testing required to meet the specifications. The Owner and Engineer shall decide if testing is required and will contract with an independent testing firm.
7. Temporary silt fences and other sediment control structures shall be installed prior to any stripping of topsoil or other land disturbing activities as noted on the plan or as required by the engineer during the construction.
8. All disturbed areas must be stabilized within 7 days after construction activities have ceased in that area unless construction will resume within 21 days after stopping.
9. All sediment control measures shall be checked every 7 days and after each rainstorm and repaired as necessary. Any modifications to the Stormwater Pollution Prevention Plan SWPPP shall be noted in the inspection reports and approved by the civil engineer. Silt build-up shall be removed and properly disposed of when it reaches a depth of 1 foot or 1/2 the height of the sediment control device, whichever is less. Measures shall be evaluated for effectiveness and whether additional measures are needed to control sediment runoff.
10. Sediment shall be removed by the grading contractor from silt basins and fences prior to the removal of erosion control devices and spread over areas of the site out of the path of flowing water. The grading contractor shall be responsible for the removal of silt fences, sediment control structures, any accumulated debris, and for any clean-up required.
11. Any field tile encountered or cut during the construction shall be repaired and noted on the as-built plans.
12. Stockpiled topsoil onsite shall be spread over slopes and along pavement edges to a min depth of 4". Areas to receive topsoil shall be scarified immediately prior to placing of topsoil.
13. Final seeding of disturbed areas shall follow the specifications immediately after spreading of topsoil.
14. The Contractor shall limit construction traffic to minimize disturbance and compaction of the site. All areas impacted by construction or construction traffic shall be scarified or disc'd to break up soil prior to final grassing.
15. The owner is the City of Dublin, and will be responsible for maintenance of permanent facilities.

CONSTRUCTION SCHEDULE

1. Approximate construction date July, 2015.
2. Install straw wattles.
3. Clearing brush for trail section.
4. Strip and stockpile 2" topsoil from trail.
5. Rough grading and compaction of subgrade, and grading for trail.
6. All subgrades shall be inspected and approved by civil engineer prior to placement of stone base.
7. Install wood trail edge and stone base, backfill trail edges with topsoil and seed
8. Install boardwalk and dock foundations.
9. Construct boardwalk and fishing dock.
10. Install gravel soped ramk
11. Final cleanup and grassing of remaining disturbed areas.
12. Complete construction August 2015
13. Remove remaining temporary erosion controls after permanent vegetation is established and final grassing.

TEMPORARY SEEDING

During construction, the contractor shall be required to control erosion on all disturbed slopes before the establishment of permanent vegetation. Temporary seeding shall consist of Annual Ryegrass at 150 lbs. per acre with hydro mulch employed as necessary.

The contractor shall be required to do maintenance necessary to keep temporary seeded areas in a satisfactory condition until permanent grassing and landscaping is in place. This includes repairing washes and additional temporary seeding where a satisfactory stand of grass has not been achieved.

CITY OF DUBLIN

DIVISION OF PARKS & OPEN SPACE
6555 SHIER-RINGS ROAD
DUBLIN, OHIO 43016
PH (614) 410-4700
FAX (614) 761-6512

ECO–DESIGN & ENGINEERING, LTD
7700 Wells Road
Plain City, Ohio 43064
Phone / FAX (614) 733-0049

BRANDON PARK FISHING DOCK

BRANDONWAY DRIVE
DUBLIN OHIO 43017

DATE:	SCALE:
8/27/14	
DRAWN BY:	**SHEET NUMBER**
SES	C2

GENERAL NOTES

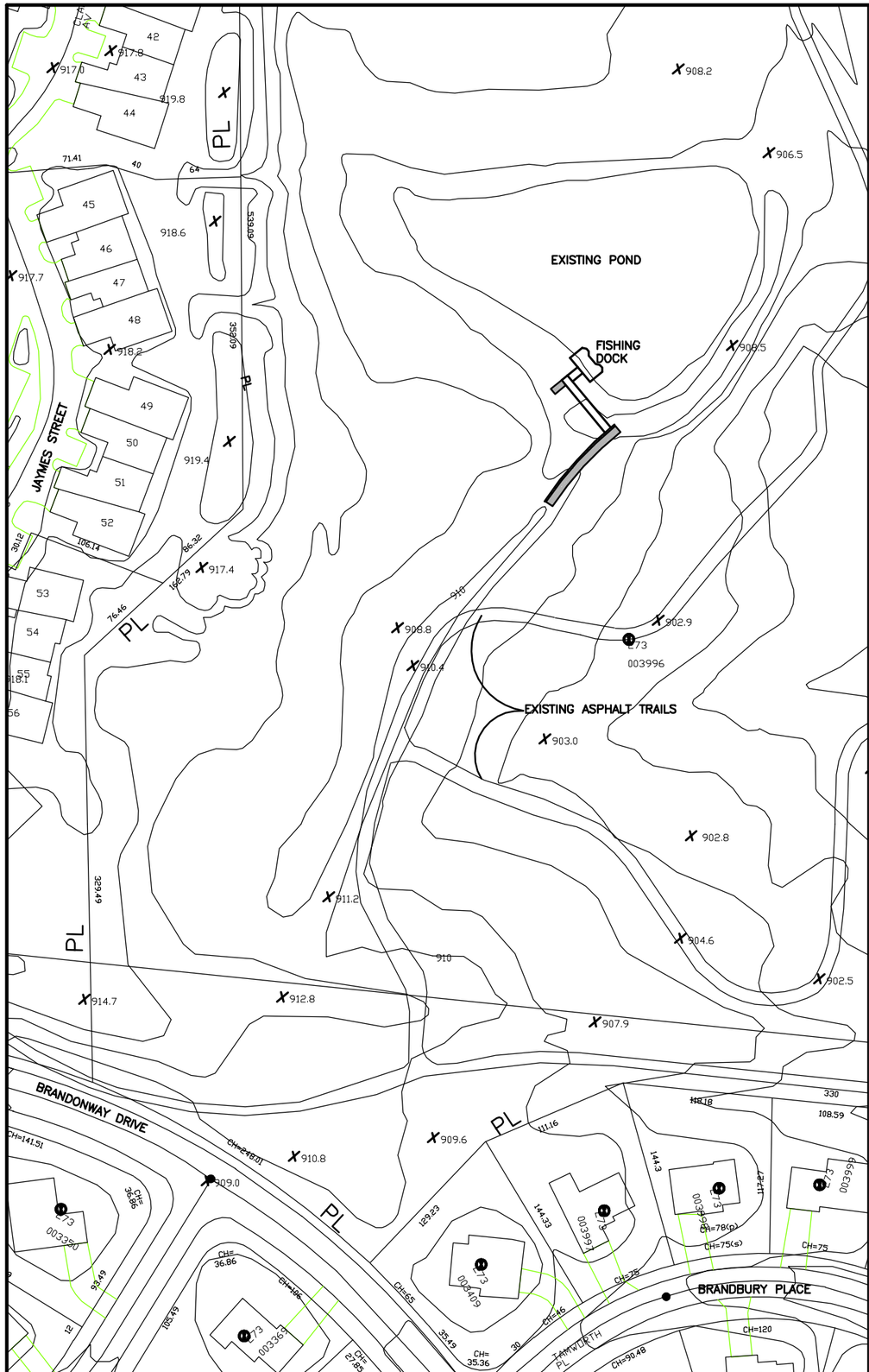

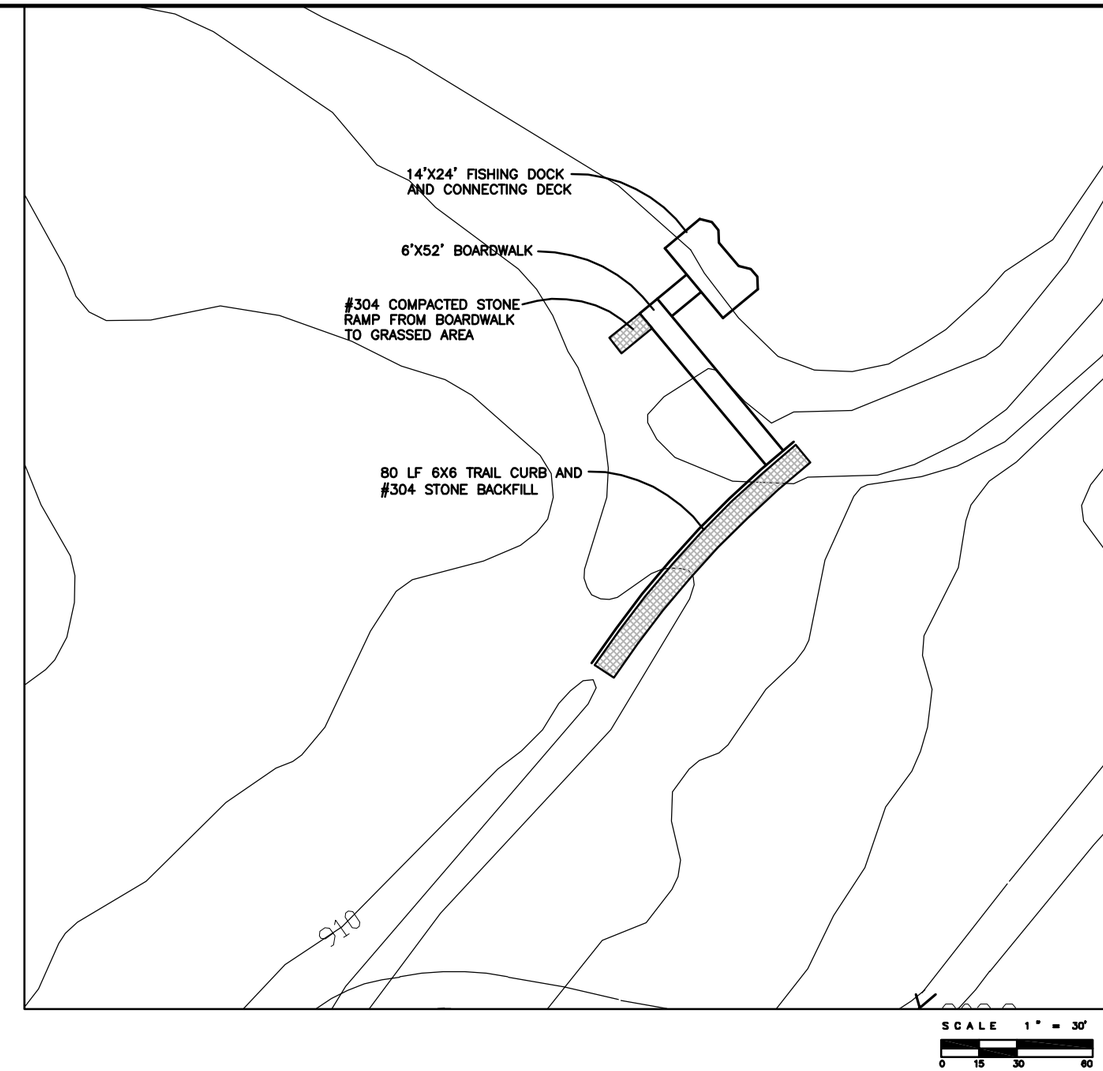

SCALE 1" = 50'
0 25 50 100

SITE PARCEL DATA

Tax District–Parcel #	Acreage	Zoning	Use
273–003996	18.502	PUD	Public Park

BENCHMARK DATA – Horizontal NAD 83, Vertical NAVD 88
EXISTING POND ELEVATION SHALL BE LOCAL PROJECT ELEVATION
AND NO HORIZONTAL BENCHMARK REQUIRED

GENERAL LAYOUT NOTES

1. Dimensions are to edge of pavement, face of curb, and edge of deck.
2. The contractor shall contact the Owner and Engineer to schedule a pre–construction meeting to stake work limits, edge of trail, and centerline of boardwalk and fishing dock.
3. The contractor shall submit manufacturers data for approval of seed mixes, piers, deck, #304 stone, and hardware.
4. The layout of the trail and boardwalk may be adjusted in the field to work around existing trees and the layout shall be approved by the owner prior to stripping of topsoil.
5. 2" of topsoil maximum shall be stripped under the trail and placed on both sides of the trail for backfilling edges.
6. The #304 stone specifications from the supplier shall be submitted for review and a sample shall be sent to a testing firm for analysis and submittal for review. If the % of fines (No 4 and smaller) is greater than 40%, then 2" of #2 stone shall be placed or the stone base shall be mixed 50:50 with #357 stone.
7. Tree protection fence shall be installed along clearing limit line prior to clearing. No protected trees are anticipated to be disturbed or removed and the Division of Parks and Open Space will be responsible for replacement of trees removed "inch for inch".

CITY OF DUBLIN

DIVISION OF PARKS & OPEN SPACE
6555 SHIER-RINGS ROAD
DUBLIN, OHIO 43016
PH (614) 410-4700
FAX (614) 761-6512

ECO–DESIGN & ENGINEERING, LTD
7700 Wells Road
Plain City, Ohio 43064
Phone / FAX (614) 733-0049

BRANDON PARK FISHING DOCK

BRANDONWAY DRIVE
DUBLIN, OHIO 43017

DATE:	SCALE:
8/27/14	1" = 200' 1" = 100'
DRAWN BY:	**SHEET NUMBER**
SES	C3

GENERAL LAYOUT AND DEMO PLAN

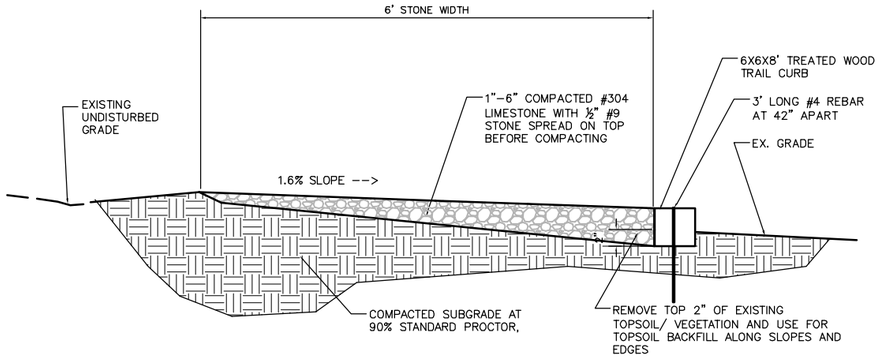

A GRAVEL TRAIL AND 6X6 WOOD EDGE

NOT TO SCALE

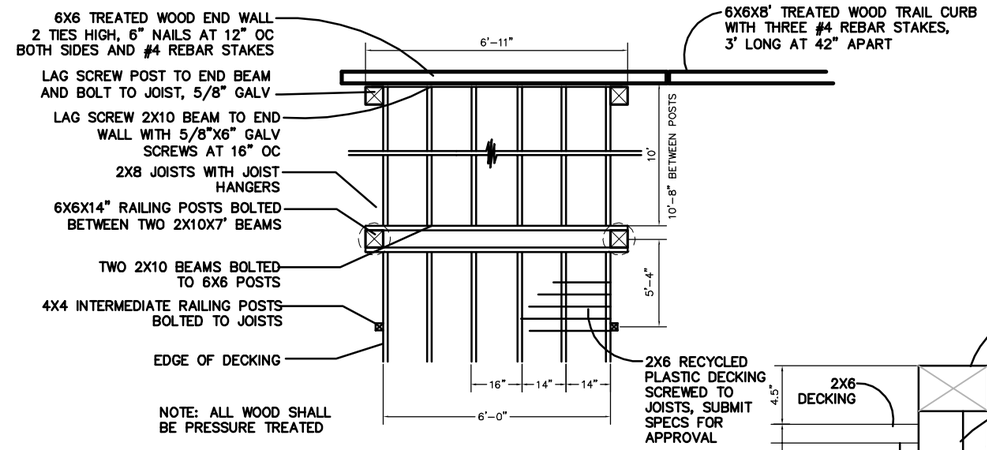

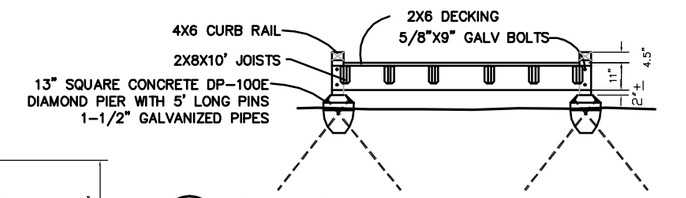

B 6' X 52' BOARDWALK AND FOOTINGS

1" = 4'

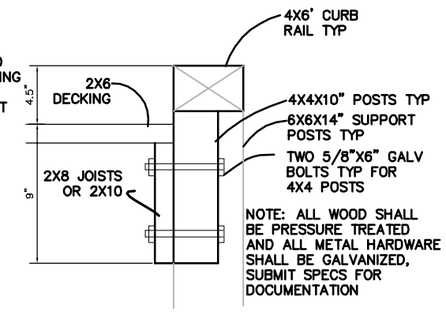

C CURB RAIL SECTION

SCALE 2" = 1'

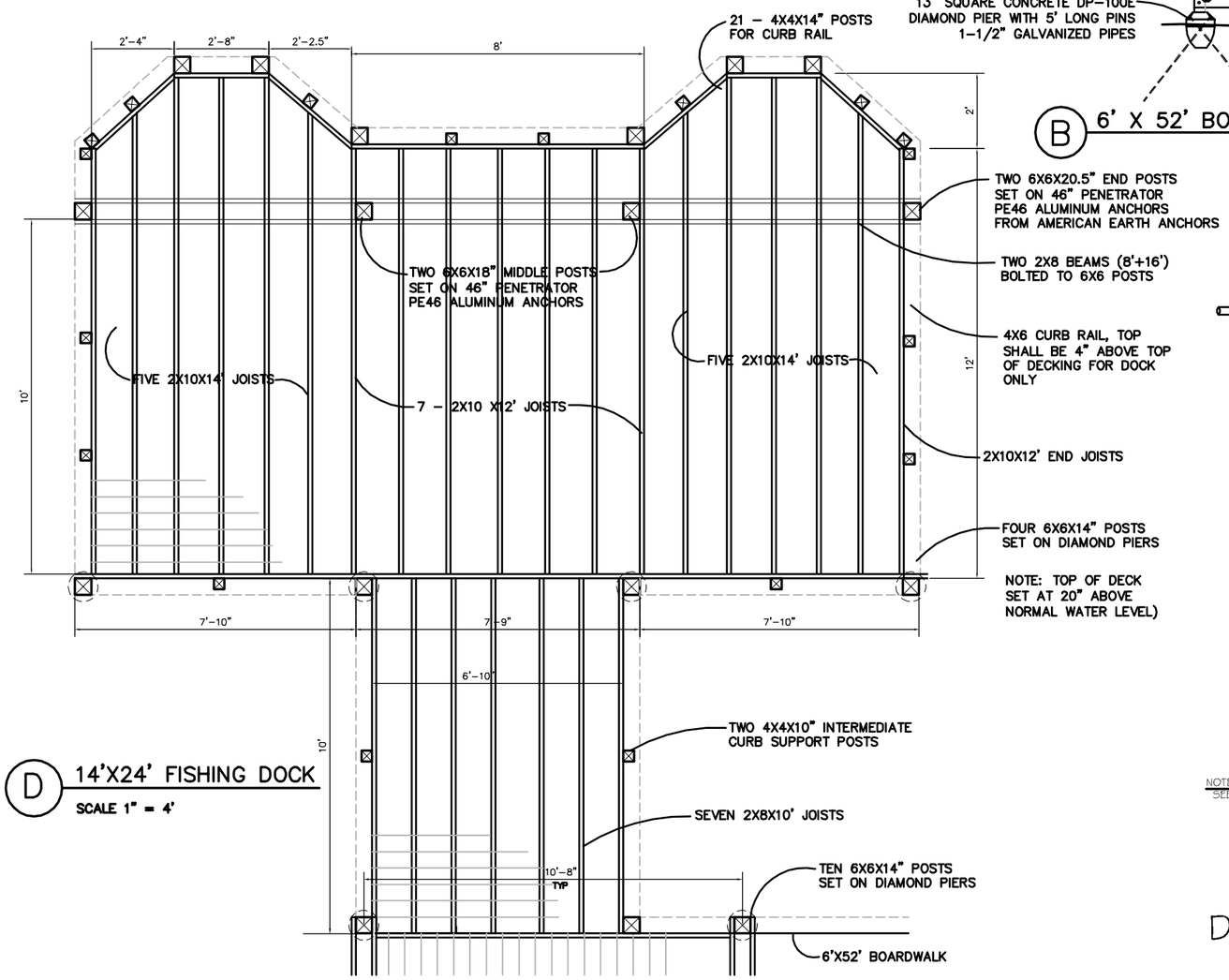

D 14'X24' FISHING DOCK

SCALE 1" = 4'

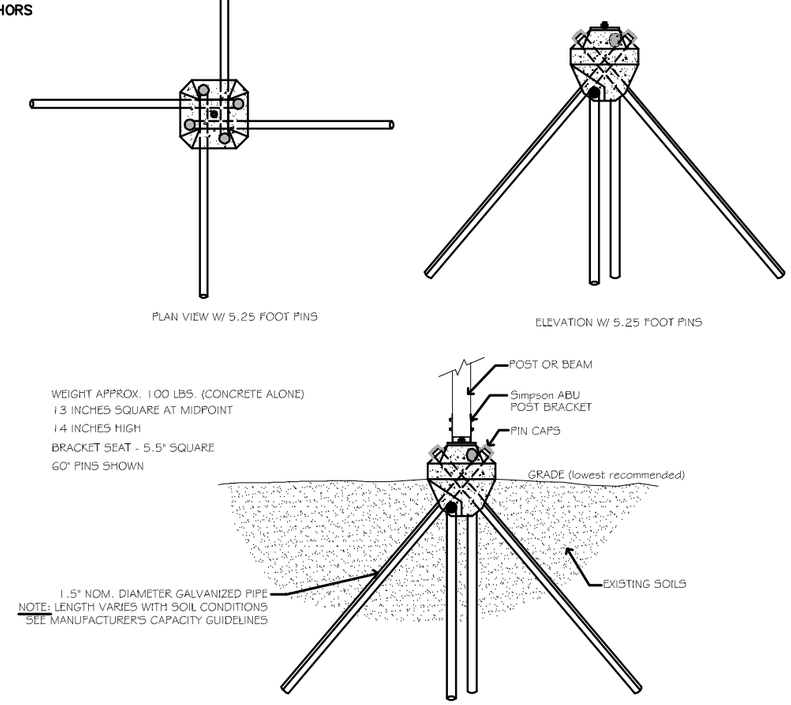

DIAMOND PIER™ DP-100

CITY OF DUBLIN

DIVISION OF PARKS & OPEN SPACE
6555 SHIER-RINGS ROAD
DUBLIN, OHIO 43016
PH (614) 410-4700
FAX (614) 761-6512

ECO–DESIGN & ENGINEERING, LTD
7700 Wells Road
Plain City, Ohio 43064
Phone / FAX (614) 733-0049

BRANDON PARK FISHING DOCK

BRANDONWAY DRIVE
DUBLIN, OHIO 43017

DATE: 8/27/4	SCALE:
DRAWN BY: SES	SHEET NUMBER C4

DETAILS