EMH&T

A legacy of **experience.** A reputation for **excellence.**

Riviera
TRAFFIC STUDY
Deer Run School Addendum

Riviera Ventures LLC

October 21, 2014

5500 New Albany Road
Columbus, Ohio 43054
Phone: 614.775.4500
Fax: 614.775.4800
Toll Free: 1-888-775-EMHT

emht.com

2013-1358

Engineers | Surveyors | Planners | Scientists

Traffic Study

For

Riviera Golf Club
Deer Run School Addendum

Dublin, Ohio
Delaware County
Union County

Prepared For:
Riviera Ventures LLC
3 Easton Oval
Suite 340
Columbus, Ohio 43219

Prepared By:
EMH&T
5500 New Albany Road
Columbus, Ohio 43054
Phone: 614-775-4500
Fax: 614-775-4800

October 21, 2014

The traffic engineering data, analysis, findings, and recommendations contained herein and originally produced by EMH&T have been prepared in accordance with accepted Engineering practice and represent anticipated future conditions to the best of our knowledge and belief.

STATE OF OHIO
JASON D. SMALLWOOD #E-66540
REGISTERED PROFESSIONAL ENGINEER

10-21-2014

Jason D. Smallwood, P.E. Date
For EMH&T

© EMH&T, 2014
All Rights Reserved

TABLE OF CONTENTS

8.0 DEER RUN ELEMENTARY SCHOOL 1
- **8.1 School Traffic Volume Projections 1**
- **8.2 School Traffic Distribution 3**
- **8.3 School Traffic Comparison To Community Plan 3**
- **8.4 School Traffic Opening Day and Horizon Year Volumes 3**
- **8.5 Traffic Signal Warrants with School Traffic 13**
- **8.6 Turn Lane Warrants with School Traffic 13**
- **8.7 Intersection Capacity Analysis with School Traffic 13**
  - 8.7.1 Hyland-Croy Road/Site Drive
  - 8.7.2 Avery Road/Memorial Drive
  - 8.7.3 Avery Road/Site Drive
- **8.8 Turn Lane Length Calculations with School Traffic 14**
- **8.9 Stub Street Connections with School Traffic 14**
- **8.10 Site Traffic as a Percentage of Total Traffic with School Traffic 15**
- **8.11 Conclusion and Recommendations with School Traffic 18**

TABLES

TABLE 6: Elementary School Trips 1
TABLE 7: Signal Warrant Summary w/ School Traffic.....13
TABLE 8: Adjacent Residential Street Volumes w/ School Traffic.....14
TABLE 9: Sight Traffic as a Percentage of Total Traffic (248 Houses/725 Students).....15
TABLE 10: Sight Traffic as a Percentage of Total Traffic (240 Houses/725 Students)....16
TABLE 11: Sight Traffic as a Percentage of Total Traffic (235 Houses/725 Students)....16
TABLE 12: Sight Traffic as a Percentage of Total Traffic (230 Houses/725 Students)....17
TABLE 13: Sight Traffic as a Percentage of Total Traffic (225 Houses/725 Students)....17

FIGURES

FIGURE 18: Site Plan – w/ Relocated Deer Run Elementary School.....2
FIGURE 19: School Trip Distribution 4
FIGURE 20: 2014 Traffic Volumes w/ School – AM – Full Build (w/ Hyland-Croy Site Drive) 5
FIGURE 21: 2014 Traffic Volumes w/ School – PM – Full Build (w/ Hyland-Croy Site Drive).....6
FIGURE 22: 2024 Traffic Volumes w/ School – AM – Full Build (w/ Hyland-Croy Site Drive) 7
FIGURE 23: 2024 Traffic Volumes w/ School – PM – Full Build (w/ Hyland-Croy Site Drive).....8
FIGURE 24: 2014 Traffic Volumes w/ School – AM – Full Build (w/o Hyland-Croy Site Drive) 9
FIGURE 25: 2014 Traffic Volumes w/ School – PM – Full Build (w/o Hyland-Croy Site Drive).....10
FIGURE 26: 2024 Traffic Volumes w/ School – AM – Full Build (w/o Hyland-Croy Site Drive) 11
FIGURE 27: 2024 Traffic Volumes w/ School – PM – Full Build (w/o Hyland-Croy Site Drive).....12
FIGURE 28: 2014 Recommended Conditions w/ School (w/ Hyland-Croy Site Drive) 19
FIGURE 29: 2014 Recommended Conditions w/ School (w/o Hyland-Croy Site Drive) 20
FIGURE 30: 2024 Recommended Conditions w/ School (w/ Hyland-Croy Site Drive) 21
FIGURE 31: 2024 Recommended Conditions w/ School (w/o Hyland-Croy Site Drive) 22

APPENDICES

APPENDIX H: Traffic Volume Calculations w/ Deer Run Elementary School
APPENDIX I: Warrants (Signal and Turn Lane) w/ Deer Run Elementary School
APPENDIX J: Capacity Analysis Reports w/ Deer Run Elementary School
APPENDIX K: Turn Lane Sizing Calculations w/ Deer Run Elementary School
APPENDIX L: Sight Traffic As a Percentage of Total Traffic w/ Deer Run Elementary School

8.0 DEER RUN ELEMENTARY SCHOOL

This document serves as an extension of the Riviera Traffic Study, dated September 24, 2014 and has been prepared to determine the transportation impacts associated with relocation of the existing Deer Run Elementary School in combination with development of the Riviera site. All study area intersections, analysis scenarios and analytical components are consistent with the procedures documented in the September 24, 2014 study.

Deer Run Elementary is currently located on the west side of Avery Road approximately 500 feet south of Glick Road. The proposed school site is located on the western edge of the Riviera development adjacent to Dublin, Jerome High School. A site plan (**Figure 18**) has been included and details the location of the relocated elementary school within the Riviera development.

8.1 School Traffic Volume Projections

Dublin City Schools Superintendent furnished data indicating that the new school site is expected to accommodate an increase in student population. He also indicated that the elementary school district boundaries are not expected to change. Data furnished is summarized below:

Building	# Students	# Staff
Deer Run (Current)	469	53
Deer Run (New)	725	78

Trip generation characteristics of both the existing and proposed elementary schools have been based on ITE trip generation data and methodology contained in Trip Generation 9th Edition (Institute of Transportation Engineers, 2012). Trips generation rates have been forecast using rates for Land Use Code 520 (Elementary School). Detailed Trip Generation calculations are provided in **Appendix H** and summarized in **Table 6**.

TABLE 6
Elementary School Trips

	Peak Hour	Total Trips	Entering	Exiting
Existing Deer Run Elementary	AM Total Trips	211	116	95
	PM Total Trips	70	34	36
Proposed Deer Run Elementary	AM Total Trips	326	179	147
	PM Total Trips	109	53	56

FIGURE 18
Site Plan – with Relocated Deer Run Elementary School

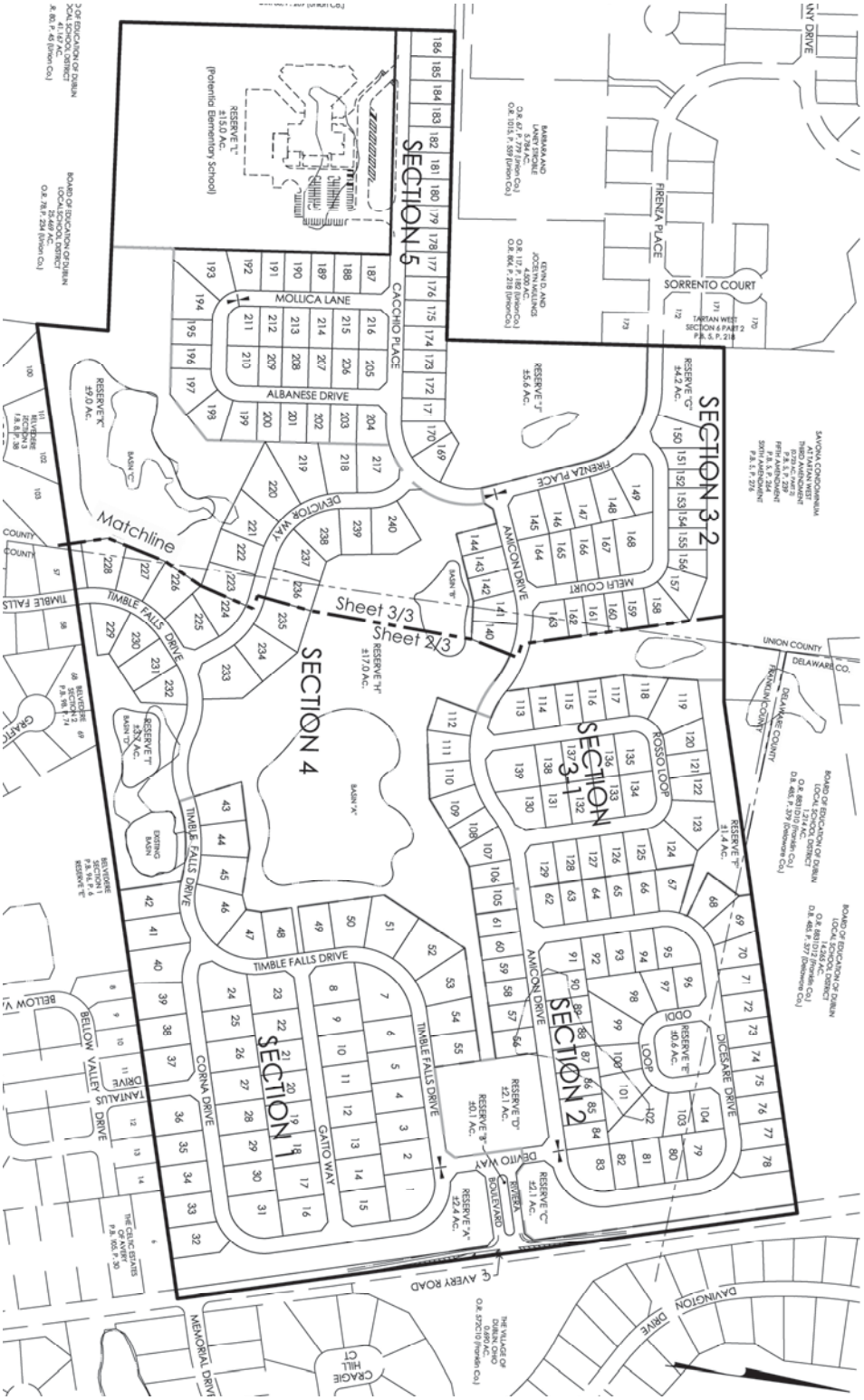

8.2 School Traffic Distribution

School traffic trip assignment is based on a combination of global trip distribution allocation and the proximity/size of adjacent neighborhoods. An inventory of the existing Deer Run school district boundary, which was assumed to include all of the proposed Riviera development, contained approximately 1,929 dwelling units. Riviera consists of approximately 13 percent and the combination of Belvedere and Shannon Glenn consists of approximately 16 percent of these units.

Trips generated from the Riviera development are not expected to use the external street system and were assigned as internal trips. Trips generated by the Belvedere/Shannon Glenn neighborhoods were assumed to use both the external street system as well as internal streets for direct access to the proposed school. Based on the configuration of the Belvedere/Shannon Glenn street network and the location of connection points to Riviera, 12 percent of the Belvedere/Shannon Glenn trips were assumed to use external street system for access to the new school. This 12 percent equates to approximately 2 percent of the total trip generation rate and was assigned separately from trips using global distribution assumptions.

The remaining 71 percent of the trips were assigned using global trip distribution allocations primarily based on global distribution documented in the Riviera Traffic Study, dated September 24th, 2014. However, minor adjustments were made to accurately reflect school specific distribution characteristics associated with the Deer Run district boundary. Modifications are limited to those shown below and illustrated in **Figure 19**. Detailed trip distribution calculations and percentages are provided in **Appendix H**.

- ~~15%~~ (9%) West on Post Road
- ~~8%~~ (4%) East on Post Road
- 5% West on Mitchell-Dewitt Road
- 3% West on McKitrick Road
- 7% North on Hyland-Croy Road
- 12% North on Jerome Road
- ~~15%~~ (23%) East on Glick Road
- ~~15%~~ (27%) East on Brand Road
- ~~20%~~ (10%) South on Muirfield Drive

8.3 School Traffic Trip Generation Comparison to Community Plan

Trip generation by a land use consistent with the Community Plan "Preferred Growth Scenario" has been documented for comparison to the proposed plan including an elementary school. Trip comparisons have been completed assuming the site's existing land use as a golf course. The comparison analysis is illustrated in **Appendix H**.

8.4 School Traffic Opening Day and Horizon Year Volumes

Trips generated from the existing Deer Run elementary school were removed from the volume plates and replaced with trips generated by the proposed Deer Run elementary school. Detailed traffic volume calculations have been included in **Appendix H** illustrating the development of 2014 and 2024, traffic volumes with the planned school improvements. Detailed volume plates are illustrated in **Figures 20** through **27**.

FIGURE 19
School Trip Distribution

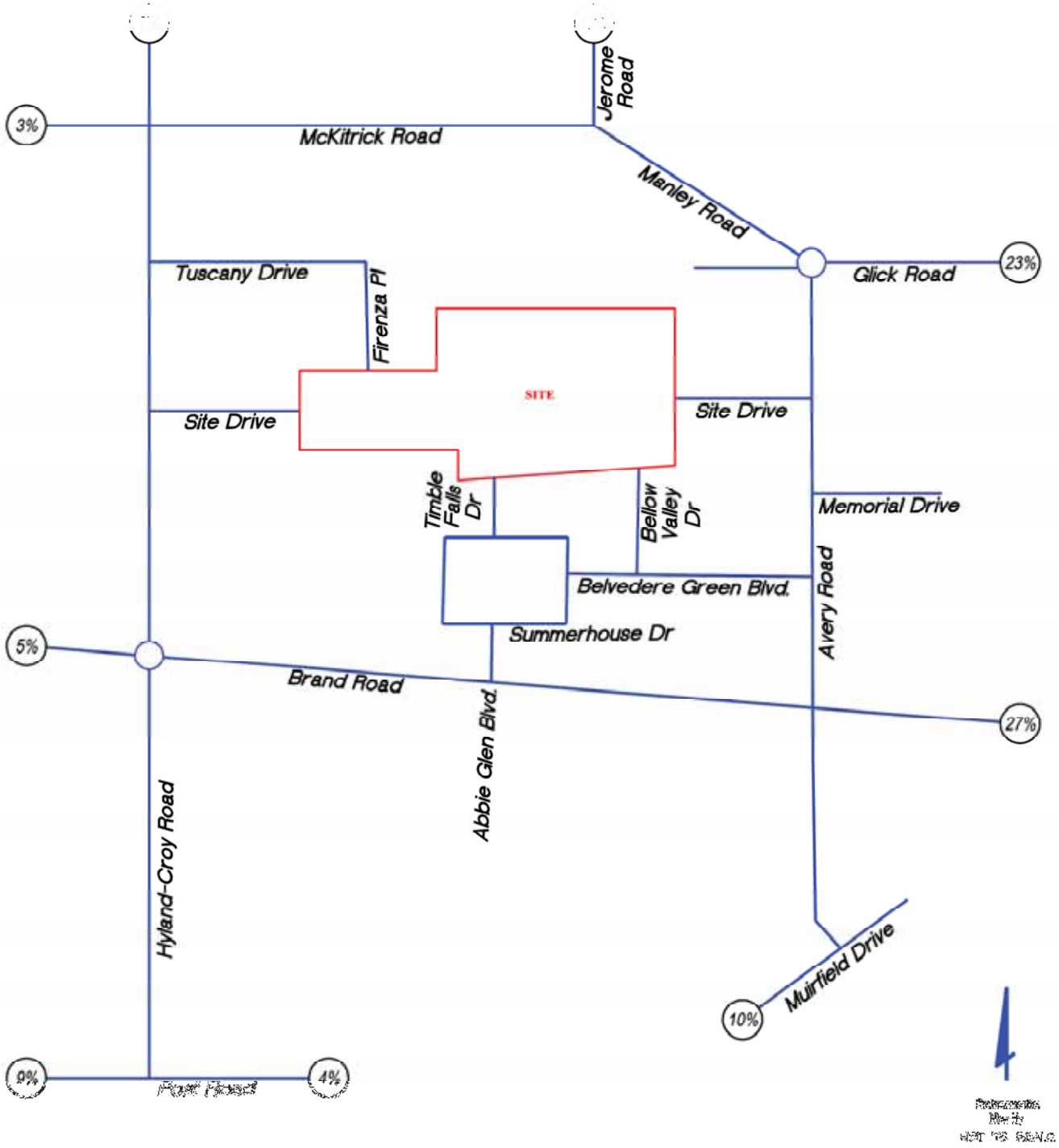

FIGURE 20
2014 Traffic Volumes w/School – AM Peak Hour – Full Build (w/ Hyland-Croy Site Drive)

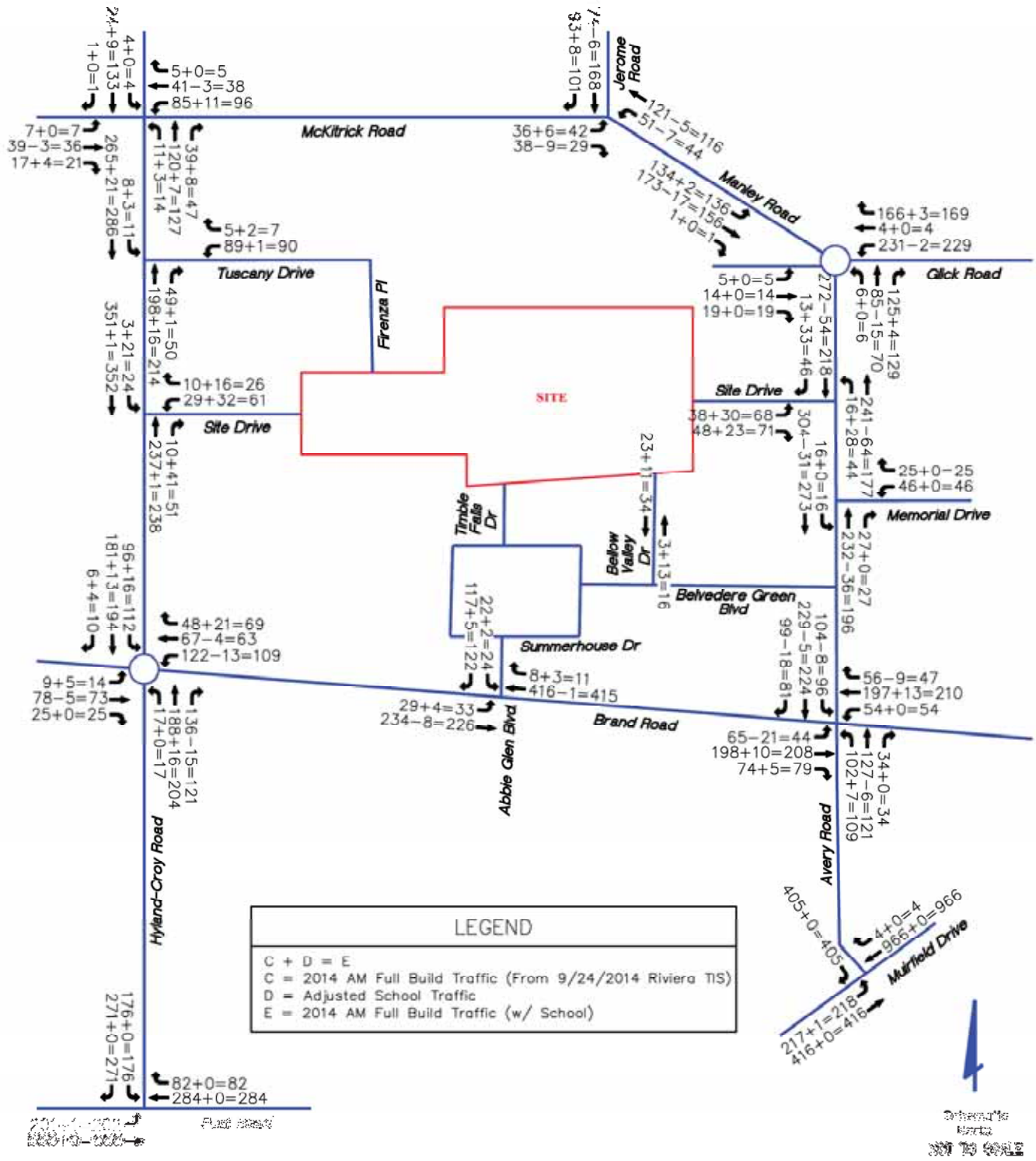

FIGURE 21
2014 Traffic Volumes w/School – PM Peak Hour – Full Build (w/ Hyland-Croy Site Drive)

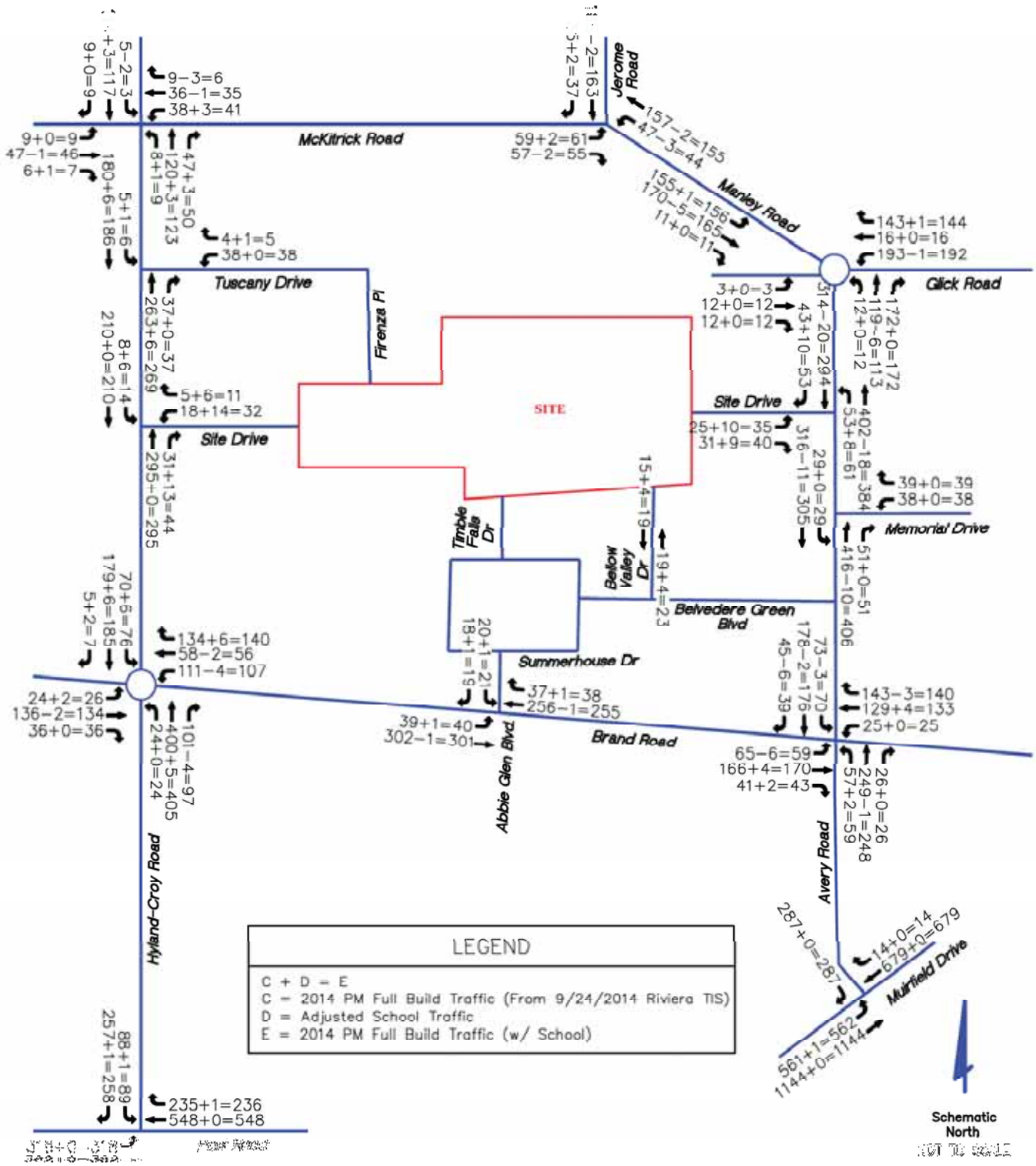

FIGURE 22
2024 Traffic Volumes w/ School – AM Peak Hour – Full Build (w/ Hyland-Croy Site Drive)

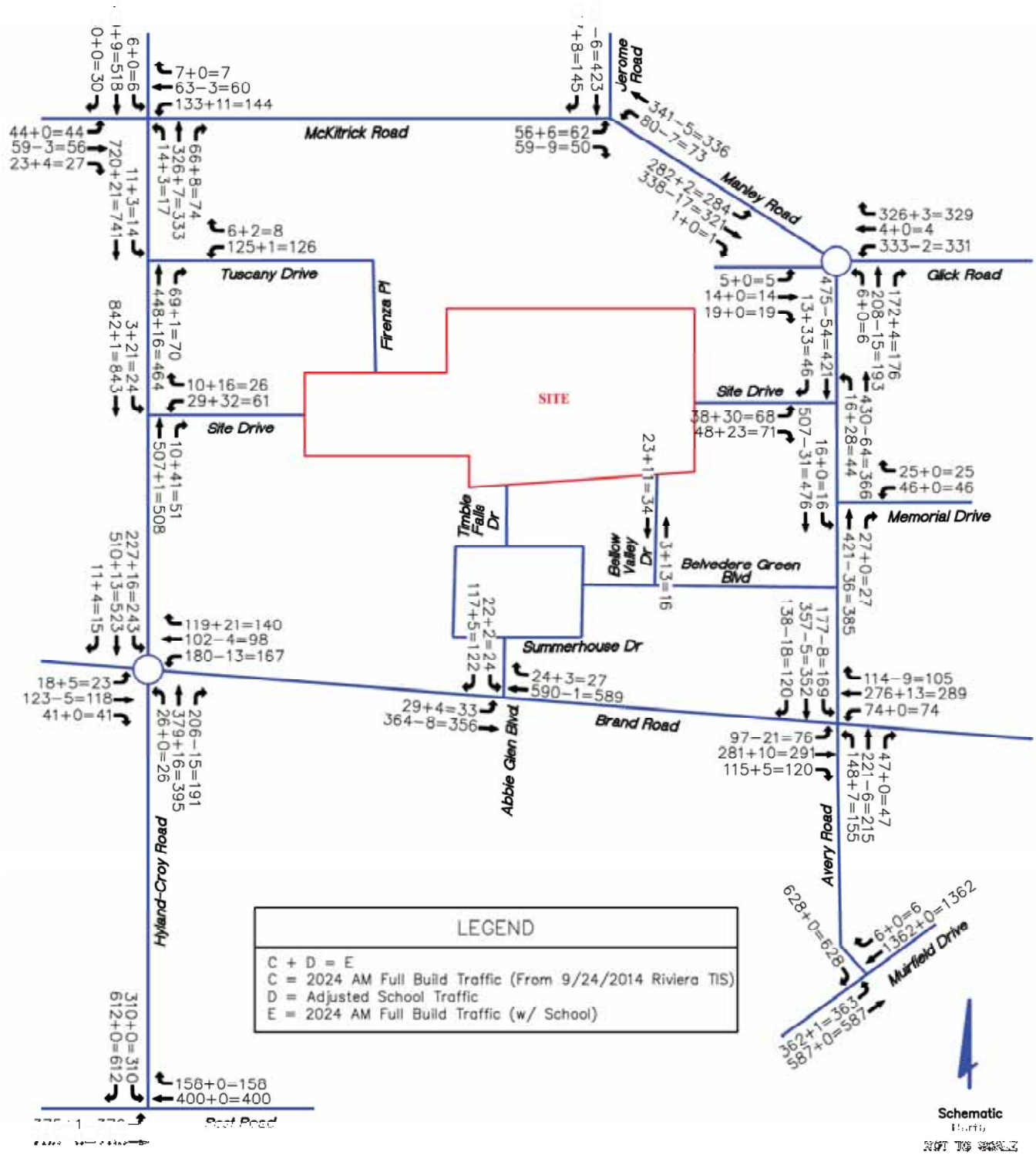

FIGURE 23
2024 Traffic Volumes w/School – PM Peak Hour – Full Build (w/ Hyland-Croy Site Drive)

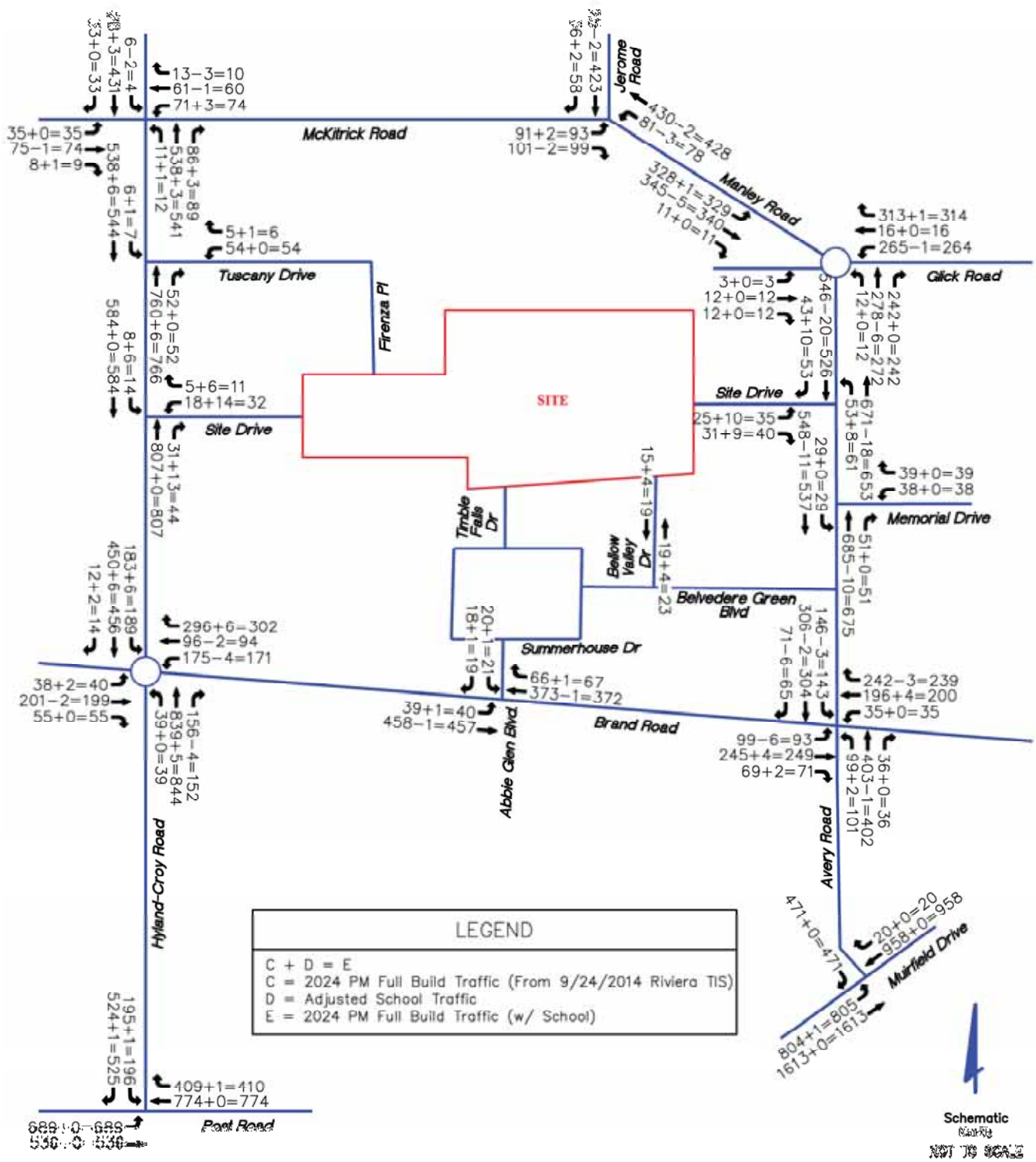

FIGURE 24
2014 Traffic Volumes w/School – AM Peak Hour – Full Build (w/o Hyland-Croy Site Drive)

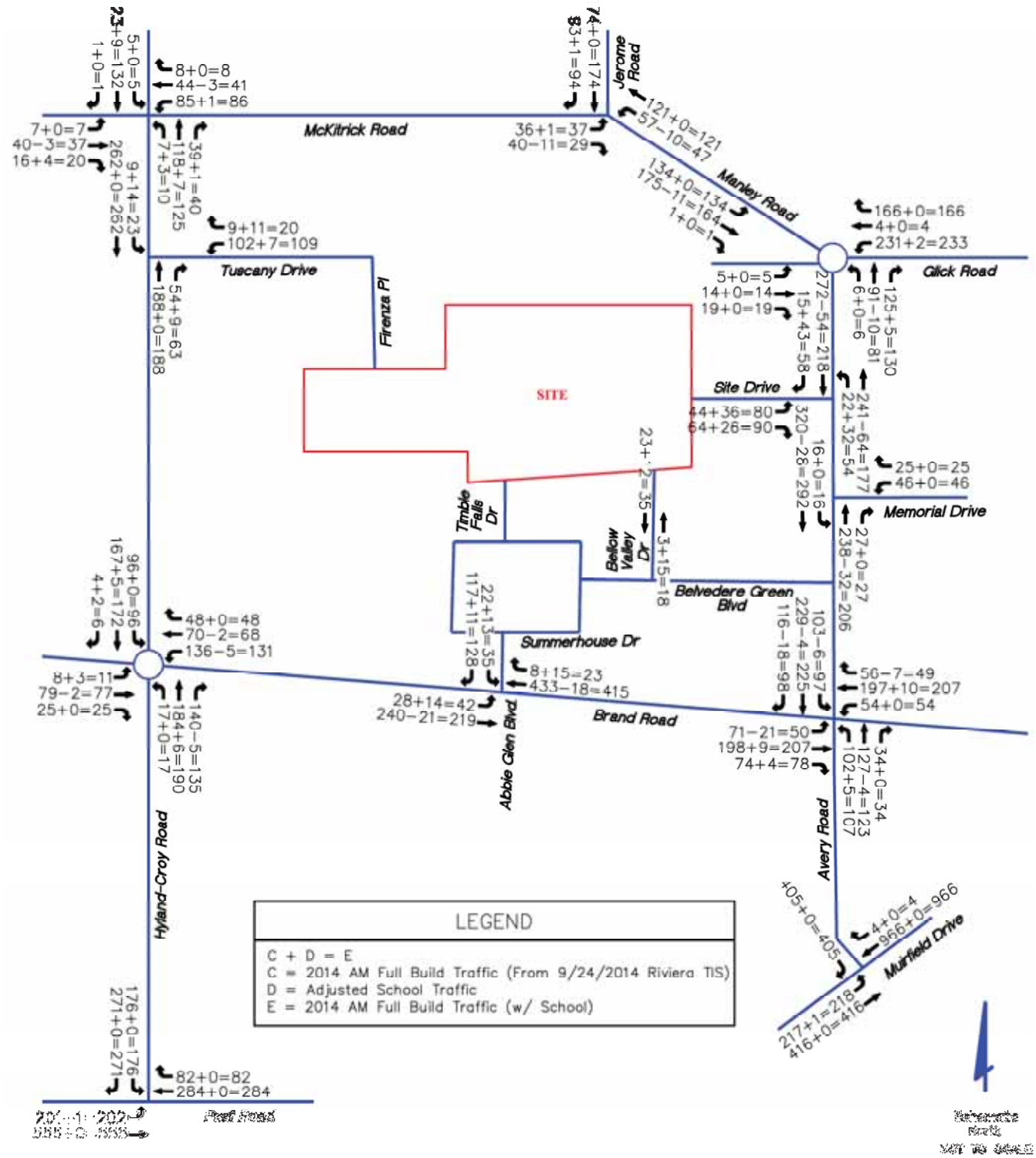

FIGURE 25
2014 Traffic Volumes w/School – PM Peak Hour – Full Build (w/o Hyland-Croy Site Drive)

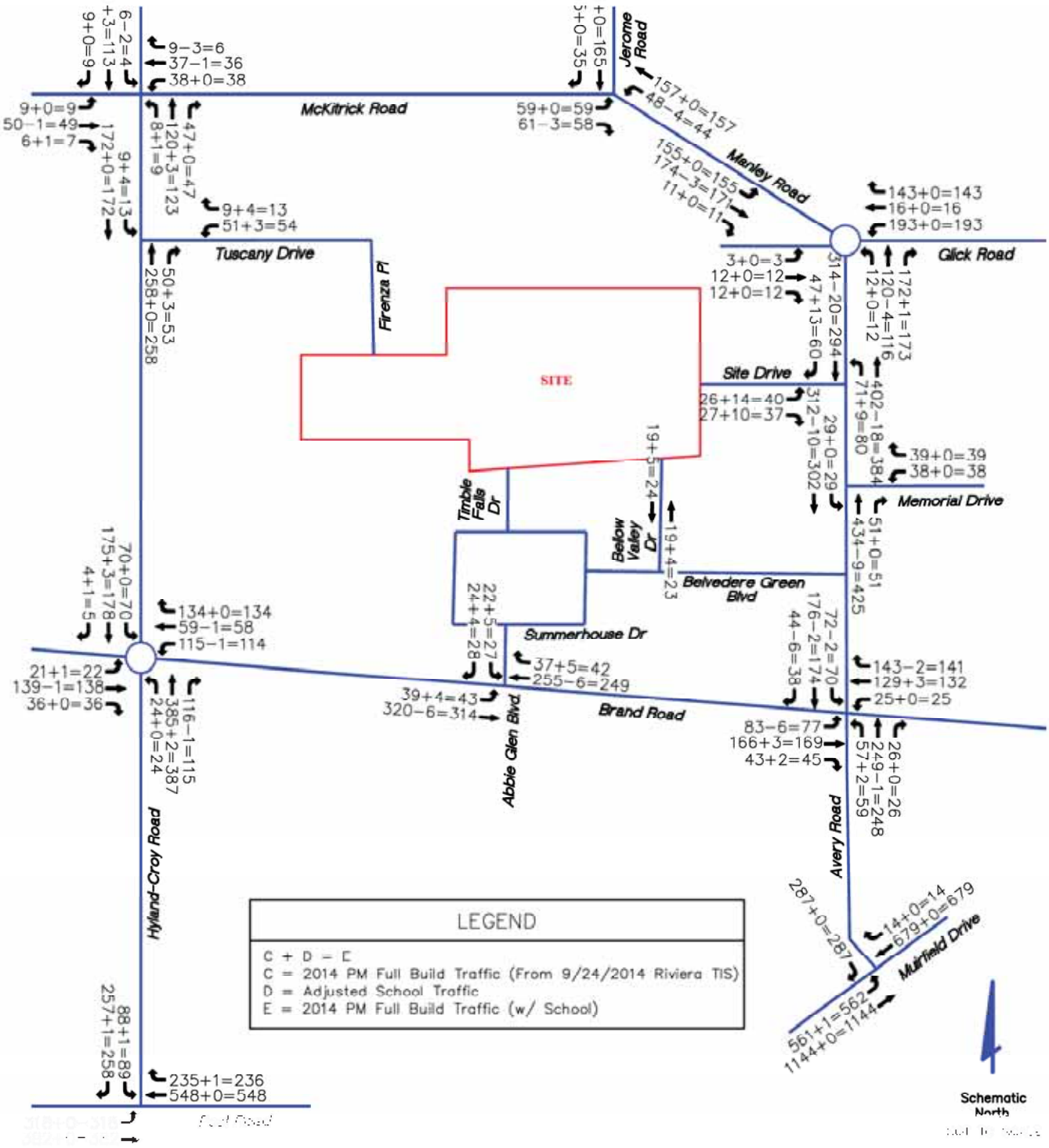

FIGURE 26
2024 Traffic Volumes w/School – AM Peak Hour – Full Build (w/o Hyland-Croy Site Drive)

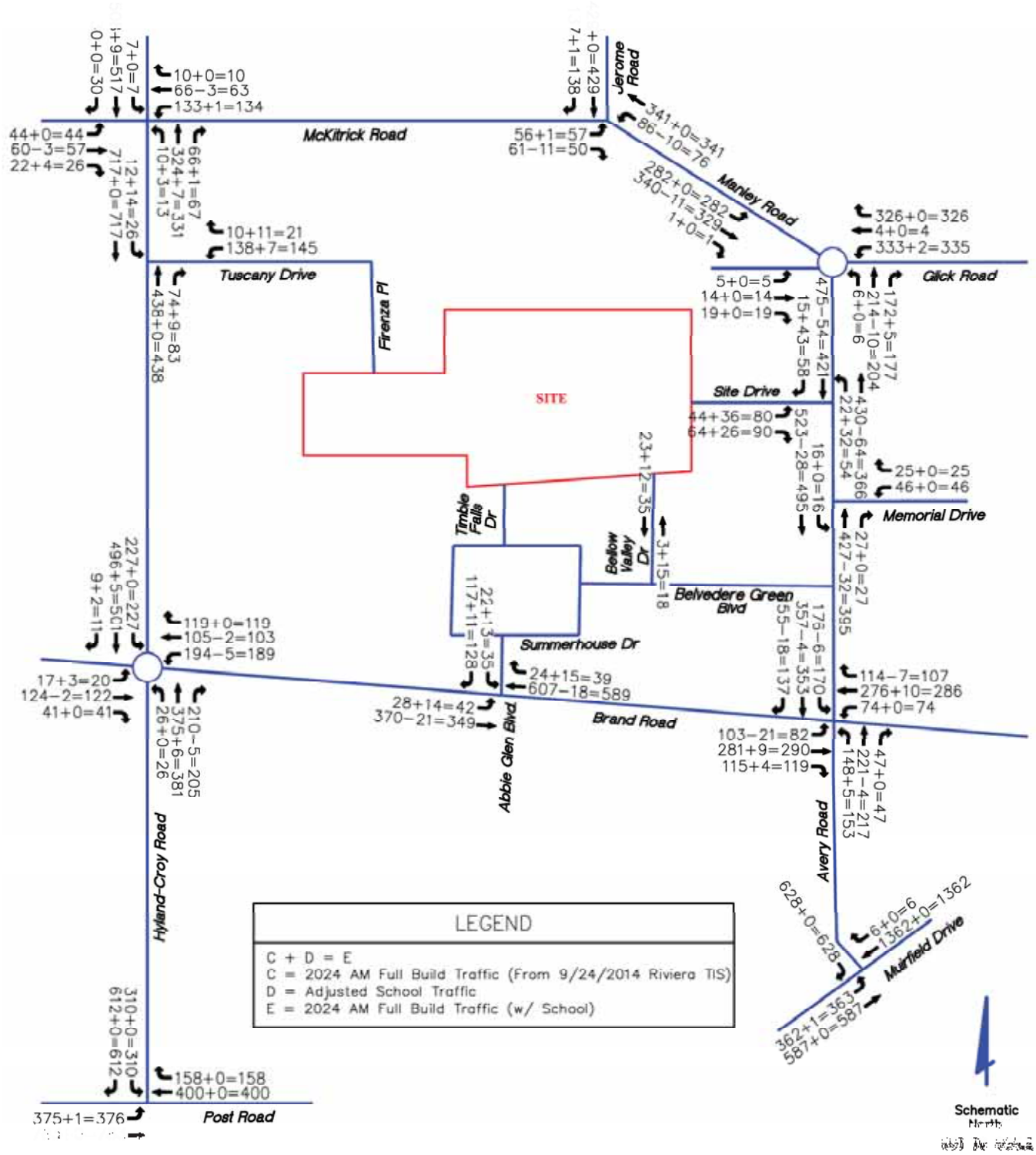

FIGURE 27
2024 Traffic Volumes w/School – PM Peak Hour – Full Build (w/o Hyland-Croy Site Drive)

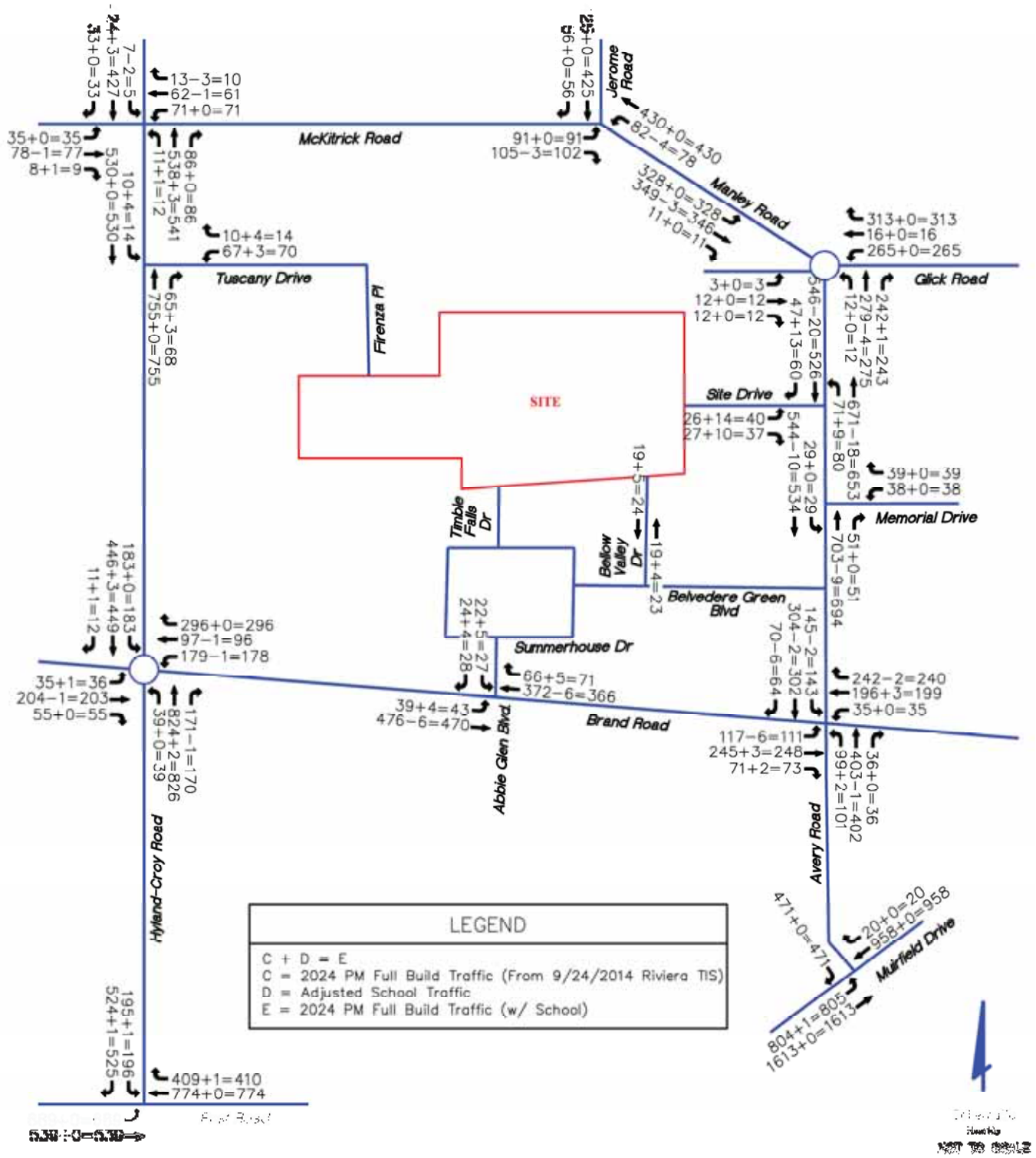

8.5 Traffic Signal Warrants with School Traffic

Traffic Signal warrants not previously met as analyzed in Section 6.1 have been reevaluated with the addition of school traffic. Signal warrant analysis results are summarized in **Table 7**.

TABLE 7
Signal Warrant Summary – w/School Traffic

Warrant Type	Conditions	2014	2024
Hyland-Croy Road / Site Drive			
8-Hour	1-Lane Minor Approach	NO	NO

Analyses indicated that 2024 Full Build traffic volumes with school traffic do not satisfy an eight hour warrant at the Hyland-Croy Road/Site Drive intersection. Signal warrant calculations have been included in **Appendix I**.

8.6 Turn Lane Warrants with School Traffic

Left and right turn lane warrants not previously met as analyzed in Section 6.2 have been reevaluated with the addition of school traffic. Results indicate that if the Site Drive is built on Hyland-Croy Road, a southbound left turn lane is expected to be warranted in opening year (2014). A northbound right turn lane is expected to warranted under horizon year (2024) conditions. If the Site Drive is not built on Hyland-Croy Road, it is expected that a southbound right turn lane will be warranted under horizon year (2024) conditions, with school traffic. Turn lane warrant charts are provided in **Appendix I**.

8.7 Intersection Capacity Analyses with School Traffic

Capacity analyses were conducted for all study area intersections with the addition of school traffic. A summary is provided below if the level-of-service results dropped to an E or less from results previously documented in the September 24, 2014 study. All study area intersection results are summarized and detailed in **Appendix J**.

8.7.1 Hyland-Croy Road/Site Drive

Under two-way stop control, with school traffic, all approaches of the Hyland-Croy Road/Site Drive intersection are expected to operate at a LOS C or better with opening year 2014 volumes. With the addition of background growth through the horizon year and the addition of the relocated/expanded Deer Run Elementary School, the level-of service is forecasted at a LOS F with 56.6 seconds of delay for westbound traffic. Horizon year 2024 Full Build traffic volumes do not satisfy eight-hour traffic signal warrants. As a result signalization has not been analyzed. Under single lane roundabout control, all approaches of the Hyland-Croy Road/Site Drive intersection are expected to operate at a LOS B or better with horizon year (2024) volumes.

8.7.2 Avery Road/Site Drive

The Avery Road/Site Drive intersection is expected to operate at a LOS D or better with full build horizon year (2024) traffic volumes with a site drive connection to Hyland-Croy Road. This level of service is based on the addition of a warranted northbound left turn lane.

If a site drive connection to Hyland-Croy Road is not constructed, the eastbound approach is expected to operate at an LOS E with 36.5 seconds of delay in the horizon year (2024). The Highway Capacity Manual threshold between a LOS D and LOS E is 35 seconds. With delays near the D/E threshold and a 10 year horizon needed to reach this point, improvements beyond a northbound left turn lane and southbound right turn lane are not recommended.

8.8 Turn Lane Length Calculations with School Traffic

Turn lane lengths were recalculated with the addition of school traffic. Calculated lengths for warranted turn lanes are provided below.

- Northbound left turn lane at Avery Road/Site Drive intersection
  = 161' including 50' drop taper
- Southbound right turn lane at Avery Road/Site Drive intersection
  = 161' including 50' drop taper
- Southbound left turn lane at Hyland-Croy Road/Site Drive intersection
  = 225' including 50' drop taper
- Northbound right turn lane at Hyland-Croy Road/Site Drive intersection
  = 225' including 50' drop taper

Detailed calculations are provided in **Appendix K**.

8.9 Stub Street Connections with School Traffic

At the request of the City of Dublin, volumes on adjacent residential streets have been listed with and without the site including Deer Run Elementary school in **Table 8**.

TABLE 8
Adjacent Residential Street Volumes – w/School Traffic

Road Name	Existing	2014		2024	
		w/ HCSD	w/o HCSD	w/ HCSD	w/o HCSD
AM					
Firenza Pl	18	30	87	30	87
Summerhouse Dr	12	47	96	47	96
Bellow Valley Dr	21	50	53	50	53
PM					
Firenza Pl	22	31	79	31	79
Summerhouse Dr	16	33	54	33	54
Bellow Valley Dr	26	42	47	42	47

# = Two-direction volume
HCSD = Hyland-Croy Site Drive

8.10 Site Traffic as a Percentage of Total Traffic with School Traffic

Site traffic and school traffic percentages have been summarized for each intersection under full build out conditions in **Table 9**. Full build out consist of 248 single family detached dwelling units and an elementary school with a 725 student capacity.

TABLE 9
Site Traffic as Percentage of Total Traffic
w/ 248 Single Family Dwelling Units
w/ 725 Student Elementary School

Intersection	With Hyland-Croy Site Drive			Without Hyland-Croy Site Drive		
	Background	Riviera Single Family Units	Proposed Deer Run	Background	Riviera Single Family Units	Proposed Deer Run
Hyland-Croy/McKitrick	96.5%	1.4%	2.1%	97.3%	1.5%	1.2%
Hyland-Croy/Tuscany	96.6%	1.4%	2.0%	95.6%	2.5%	1.9%
Hyland-Croy/Site Dr	91.0%	4.0%	5.0%	N/A	N/A	N/A
Hyland-Croy/Brand/Mitchell-Dewitt	95.1%	2.6%	2.3%	96.1%	2.7%	1.2%
Hyland-Croy/Post	97.6%	1.7%	0.7%	97.6%	1.7%	0.7%
Brand/Abbie Glen	95.4%	1.9%	2.7%	92.8%	4.0%	3.2%
Avery/Muirfield	98.3%	1.2%	0.5%	98.3%	1.2%	0.5%
Avery/Brand	93.0%	4.1%	2.9%	92.1%	5.0%	2.9%
Avery/Memorial	90.8%	6.3%	2.9%	89.1%	7.7%	3.2%
Avery/Site Dr	82.5%	11.2%	6.3%	79.8%	12.8%	7.4%
Avery/Glick/Manley	94.0%	3.4%	2.6%	93.3%	3.7%	3.0%
Jerome/McKitrick	95.7%	2.4%	1.9%	95.5%	3.0%	1.5%

Tables 10 through **13** have been included to provide percentage summaries should the site not reach full build out potential. Supporting calculations for each scenario are furnished in **Appendix L.**

TABLE 10
Site Traffic as Percentage of Total Traffic
w/ 240 Single Family Dwelling Units
w/ 725 Student Elementary School

Intersection	With Hyland-Croy Site Drive			Without Hyland-Croy Site Drive		
	Background	Riviera Single Family Units	Proposed Deer Run	Background	Riviera Single Family Units	Proposed Deer Run
Hyland-Croy/McKitrick	96.5%	1.4%	2.1%	97.3%	1.5%	1.2%
Hyland-Croy/Tuscany	96.6%	1.4%	2.0%	95.8%	2.3%	1.9%
Hyland-Croy/Site Dr	91.1%	3.9%	5.0%	N/A	N/A	N/A
Hyland-Croy/Brand/Mitchell-Dewitt	95.1%	2.6%	2.3%	96.2%	2.6%	1.2%
Hyland-Croy/Post	97.6%	1.7%	0.7%	97.7%	1.6%	0.7%
Brand/Abbie Glen	95.5%	1.8%	2.7%	92.9%	3.8%	3.3%
Avery/Muirfield	98.3%	1.2%	0.5%	98.4%	1.1%	0.5%
Avery/Brand	93.1%	4.0%	2.9%	92.2%	4.9%	2.9%
Avery/Memorial	90.9%	6.2%	2.9%	89.2%	7.6%	3.2%
Avery/Site Dr	82.7%	10.9%	6.4%	80.0%	12.6%	7.4%
Avery/Glick/Manley	94.2%	3.2%	2.6%	93.4%	3.6%	3.0%
Jerome/McKitrick	95.8%	2.3%	1.9%	95.5%	3.0%	1.5%

TABLE 11
Site Traffic as Percentage of Total Traffic
w/ 235 Single Family Dwelling Units
w/ 725 Student Elementary School

Intersection	With Hyland-Croy Site Drive			Without Hyland-Croy Site Drive		
	Background	Riviera Single Family Units	Proposed Deer Run	Background	Riviera Single Family Units	Proposed Deer Run
Hyland-Croy/McKitrick	96.5%	1.4%	2.1%	97.3%	1.5%	1.2%
Hyland-Croy/Tuscany	96.6%	1.4%	2.0%	95.8%	2.3%	1.9%
Hyland-Croy/Site Dr	91.1%	3.9%	5.0%	N/A	N/A	N/A
Hyland-Croy/Brand/Mitchell-Dewitt	95.2%	2.5%	2.3%	96.3%	2.4%	1.3%
Hyland-Croy/Post	97.7%	1.6%	0.7%	97.7%	1.6%	0.7%
Brand/Abbie Glen	95.6%	1.7%	2.7%	93.0%	3.7%	3.3%
Avery/Muirfield	98.4%	1.1%	0.5%	98.4%	1.1%	0.5%
Avery/Brand	93.2%	3.9%	2.9%	92.4%	4.7%	2.9%
Avery/Memorial	91.1%	6.0%	2.9%	89.4%	7.4%	3.2%
Avery/Site Dr	83.0%	10.6%	6.4%	80.2%	12.3%	7.5%
Avery/Glick/Manley	94.3%	3.1%	2.6%	93.4%	3.6%	3.0%
Jerome/McKitrick	95.8%	2.3%	1.9%	95.5%	3.0%	1.5%

TABLE 12
Site Traffic as Percentage of Total Traffic
w/ 230 Single Family Dwelling Units
w/ 725 Student Elementary School

Intersection	With Hyland-Croy Site Drive			Without Hyland-Croy Site Drive		
	Background	Riviera Single Family Units	Proposed Deer Run	Background	Riviera Single Family Units	Proposed Deer Run
Hyland-Croy/McKitrick	96.5%	1.4%	2.1%	97.3%	1.5%	1.2%
Hyland-Croy/Tuscany	96.6%	1.4%	2.0%	95.8%	2.3%	1.9%
Hyland-Croy/Site Dr	91.1%	3.9%	5.0%	N/A	N/A	N/A
Hyland-Croy/Brand/Mitchell-Dewitt	95.3%	2.4%	2.3%	96.3%	2.4%	1.3%
Hyland-Croy/Post	97.8%	1.5%	0.7%	97.8%	1.5%	0.7%
Brand/Abbie Glen	95.8%	1.5%	2.7%	93.1%	3.6%	3.3%
Avery/Muirfield	98.4%	1.1%	0.5%	98.4%	1.1%	0.5%
Avery/Brand	93.3%	3.8%	2.9%	92.4%	4.7%	2.9%
Avery/Memorial	91.2%	5.9%	2.9%	89.5%	7.3%	3.2%
Avery/Site Dr	83.1%	10.5%	6.4%	80.4%	12.1%	7.5%
Avery/Glick/Manley	94.3%	3.1%	2.6%	93.5%	3.5%	3.0%
Jerome/McKitrick	95.9%	2.2%	1.9%	95.6%	2.9%	1.5%

TABLE 13
Site Traffic as Percentage of Total Traffic
w/ 225 Single Family Dwelling Units
w/ 725 Student Elementary School

Intersection	With Hyland-Croy Site Drive			Without Hyland-Croy Site Drive		
	Background	Riviera Single Family Units	Proposed Deer Run	Background	Riviera Single Family Units	Proposed Deer Run
Hyland-Croy/McKitrick	96.5%	1.4%	2.1%	97.3%	1.5%	1.2%
Hyland-Croy/Tuscany	96.6%	1.4%	2.0%	95.9%	2.2%	1.9%
Hyland-Croy/Site Dr	91.2%	3.8%	5.0%	N/A	N/A	N/A
Hyland-Croy/Brand/Mitchell-Dewitt	95.4%	2.3%	2.3%	96.3%	2.4%	1.3%
Hyland-Croy/Post	97.8%	1.5%	0.7%	97.8%	1.5%	0.7%
Brand/Abbie Glen	95.8%	1.5%	2.7%	93.1%	3.6%	3.3%
Avery/Muirfield	98.4%	1.1%	0.5%	98.4%	1.1%	0.5%
Avery/Brand	93.4%	3.7%	2.9%	92.5%	4.6%	2.9%
Avery/Memorial	91.3%	5.8%	2.9%	89.6%	7.2%	3.2%
Avery/Site Dr	83.3%	10.3%	6.4%	80.6%	11.9%	7.5%
Avery/Glick/Manley	94.4%	3.0%	2.6%	93.6%	3.4%	3.0%
Jerome/McKitrick	95.9%	2.2%	1.9%	95.6%	2.9%	1.5%

8.11 CONCLUSION AND RECOMMENDATIONS WITH SCHOOL TRAFFIC

Analyses presented within reveal that adding the relocated/expanded Deer Run Elementary School to the planned development does not significantly alter or degrade the previously forecasted level-of-service or findings at offsite study area intersections. Results and recommendations for offsite study area intersections are consistent with the finding of the Riviera Traffic Study, dated September 24, 2014.

The addition of the relocated/expanded Deer Run Elementary School modifies the level-of-Service and/or turn lane warrant status at the planned site drives as listed below:

Avery Road/Site Drive
The proposed site drive on Avery Road is expected to operate at acceptable levels-of-service through the horizon year 2024 with the addition of a northbound left turn lane. If a site drive connection to Hyland-Croy Road is not constructed, the eastbound approach is expected to operate at an LOS E with 36.5 seconds of delay in the horizon year (2024). Additionally, if the Hyland-Croy Road/Site Drive connection is not made, a southbound right turn lane will be warranted in the horizon year 2024.

Hyland-Croy/Site Drive
If constructed, the Hyland-Croy Site Drive is expected to operate at acceptable levels-of-service in opening year 2014, with a warranted southbound left turn lane. Under 2024 full build conditions and traffic from the relocated/expanded Deer Run Elementary School, the intersection is expected to operate at a LOS F with 56.6 seconds of delay for westbound traffic. Under single lane roundabout control, all approaches of the Hyland-Croy Road/Site Drive intersection are expected to operate at a LOS B or better with horizon year (2024) volumes. If roundabout control is selected, a southbound left turn lane is not needed.

Recommended site/school related improvements have been graphically summarized in in **Figure 27** through **Figure 30.**

FIGURE 28
2014 Recommended Conditions - (w/Elementary School)
(w/ Hyland Croy Site Drive)

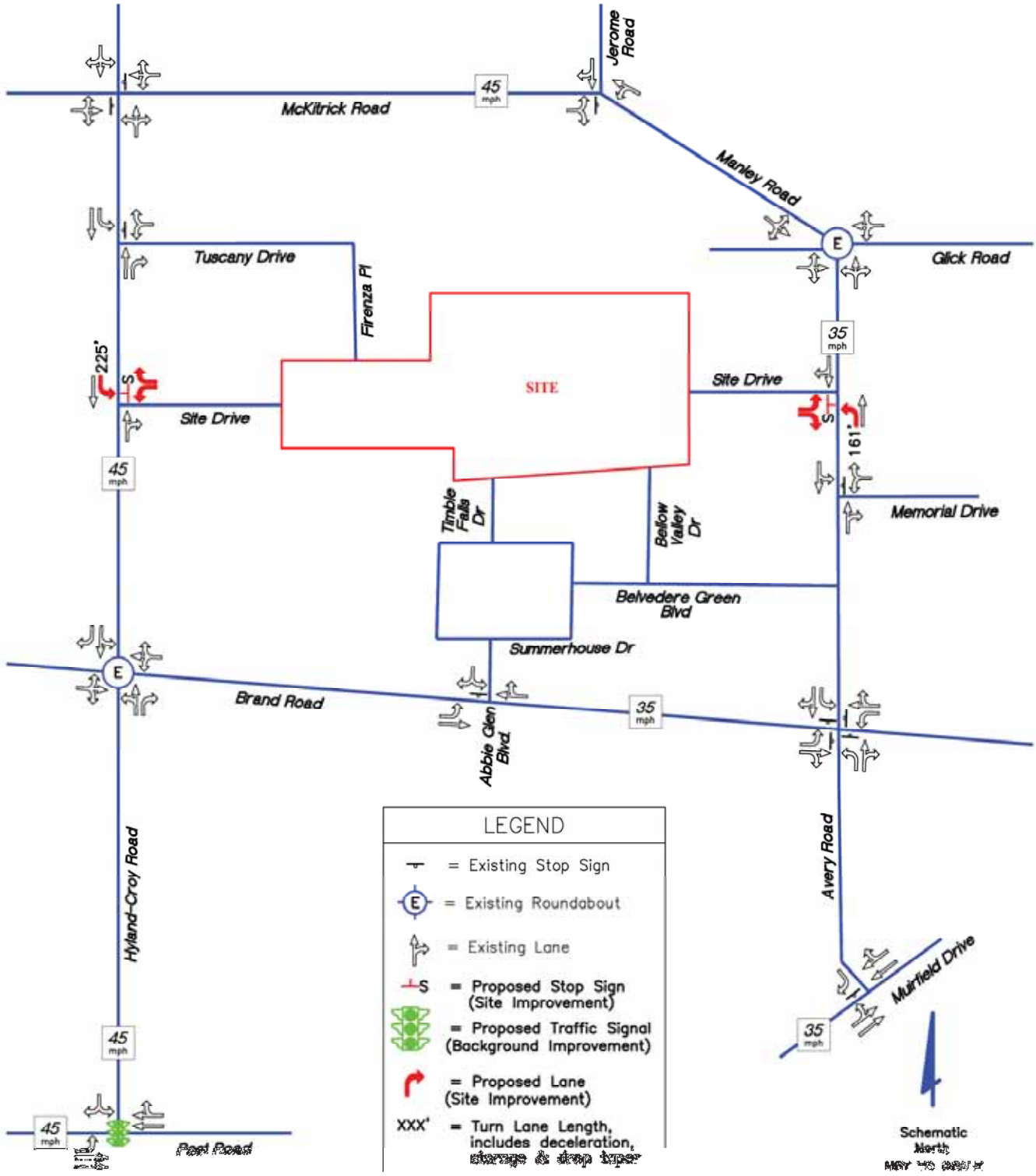

FIGURE 29
2014 Recommended Conditions - (w/Elementary School)
(w/o Hyland Croy Site Drive)

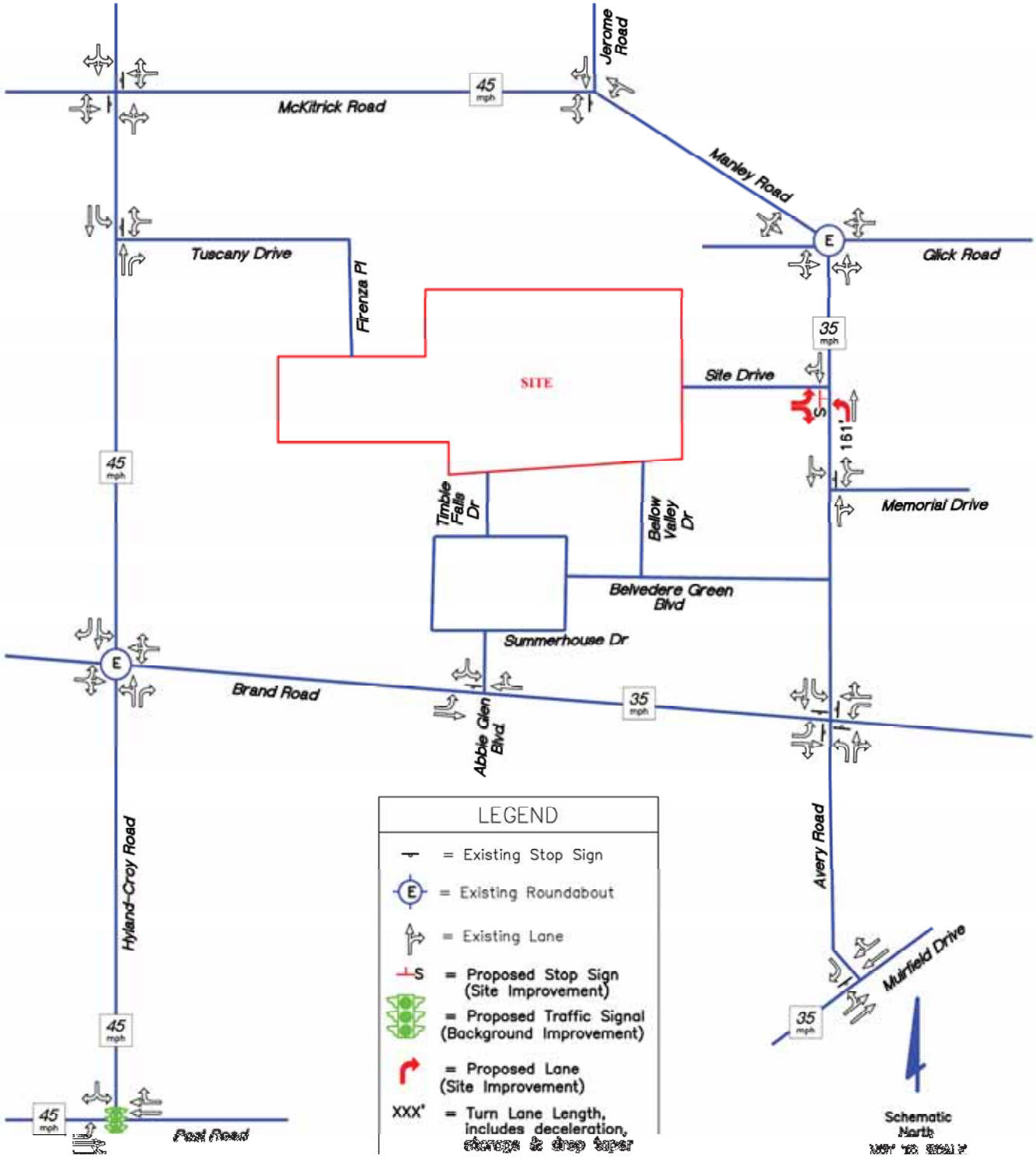

FIGURE 30
2024 Recommended Conditions - (w/Elementary School)
(w/ Hyland Croy Site Drive)

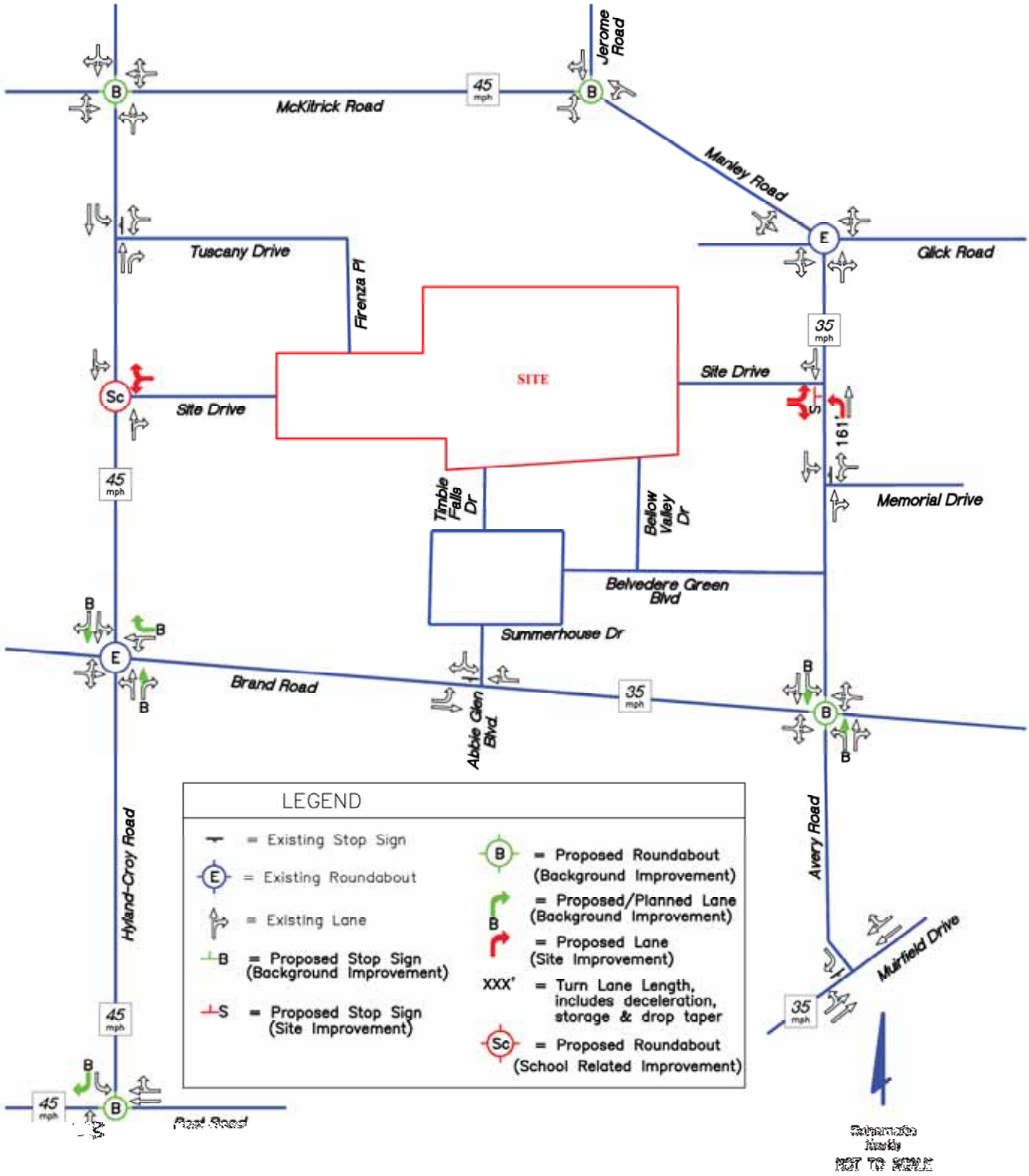

FIGURE 31
2024 Recommended Conditions - (w/Elementary School)
(w/o Hyland Croy Site Drive)

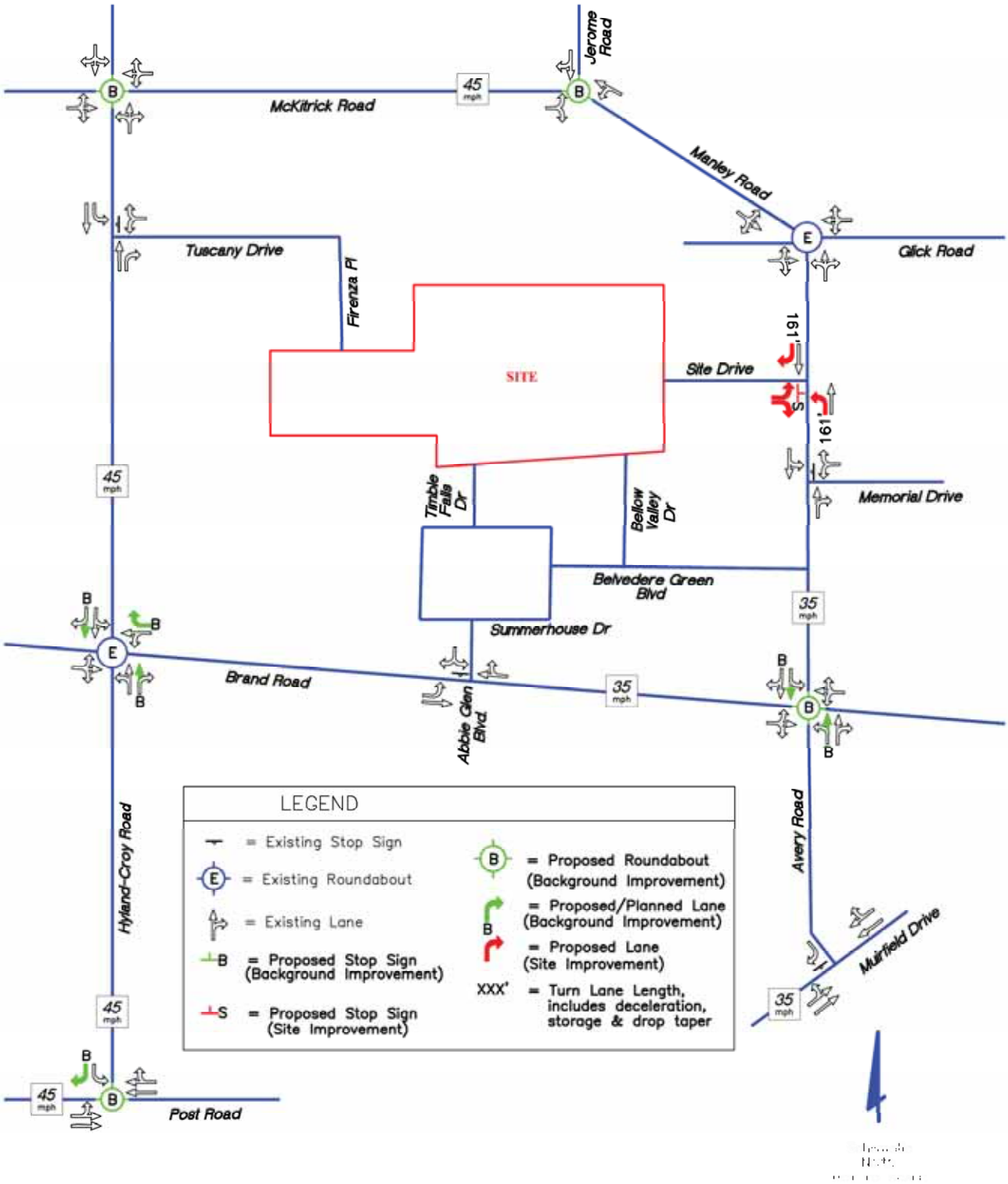

APPENDIX H
TRAFFIC VOLUME CALCULATIONS
w/ Deer Run Elementary School

Subject: FW: Deer Run

-----Original Message-----
From: Todd Hoadley <hoadley_todd@dublinschools.net>
To: cjruma <cjruma@aol.com>
Sent: Tue, Oct 7, 2014 2:25 pm
Subject: Re: Deer Run

Mr. Ruma

Thanks for the email.

Here are the numbers:

Building	# Students	# Staff
Deer Run (Current)	469	53
Deer Run (New)	725	78

Obviously, the new Deer Run numbers are estimates and we arrived at those numbers by using numbers from a current Dublin Elementary building.

Please let me know if you have additional questions.

Thanks again,

Todd F. Hoadley, Ph. D.
Superintendent
Dublin City Schools
7030 Coffman Road
Dublin, OH 43017-1068
(614) 760-4419
FAX (614) 760-4392

Subject: FW: Deer Run

-----Original Message-----
From: Todd Hoadley <hoadley_todd@dublinschools.net>
To: cjruma <cjruma@aol.com>
Sent: Mon, Oct 13, 2014 5:17 pm
Subject: Re: Deer Run

Mr. Ruma,

Thanks for the email. I wanted to take last week to speak with a few persons internally to Dublin city schools and then reflect on these conversations over the weekend before responding to your email.

First off, we are all surprised that the city officials would ask about our elementary attendance boundaries in the discussion of any proposed subdivision discussion. We have not experienced that question in the past.

As a school system, we are in the planning process for adding onto 4-5 of our current elementary school facilities. We are doing this so to both address current overcrowding and also to reduce the amount of future redistricting that we have to do.

Since a new "Deer Run" is likely a decade away, it is impossible to predict how attendance boundaries will be a decade from now as opposed to the current Deer Run facility attendance boundary. As such, the best answer we can give is that while it is impossible to accurately predict, the attendance boundaries will likely be very similar to what they are today. Additionally, positioning the future new Deer Run in close proximity to the current Deer Run prevents us from amplifying changes to our current attendance boundary.

Most do not realize but the current student population at Deer Run has been decreasing over the past few years and it is predicted to continue into the near future. Quite a bit of the current attendance boundary for Deer Run has children that are past elementary age. In the future, as these homes are sold, we will likely see a future increase in enrollment at Deer Run. Additionally, a few years ago, we added trailers to the Deer Run facility to handle over crowding and we have not used these trailers for a few years and we may pull them out this coming summer and move them to Jerome HS where student enrollment is quickly increasing.

Finally, one of the many benefits for us building a new "Deer Run" elementary school will be to build a facility that will handle a larger number of students. The current building has a capacity around 500-550 and has a very small commons / cafeteria. Our new elementary facilities are built to handle around 750 children and this additional capacity aids our efforts in not having to redistrict students and families to other elementary schools.

Again, thanks for your patience with my reply and please let me know if you have additional questions.

Todd F. Hoadley, Ph. D.
Superintendent
Dublin City Schools
7030 Coffman Road
Dublin, OH 43017-1068
(614) 760-4419
FAX (614) 760-4392

Riviera

Traffic Impact Study

School Trip Generation Calculations

Institute of Transportation Engineers, 9th Edition

	Land Use	Square Feet or Units	ITE Code	Time Period	ITE Formula	Total Trips	Trips Entering	Trips Exiting
	Elementary School	469	520	ADT	Average Rate = 1.29	606	303	303
	(Existing Deer Run Elementary)	Students		AM Peak	Average Rate = 0.45	211	116	95
				PM Peak (Generator)	Average Rate = 0.28	131	59	72
				PM Peak	Average Rate = 0.15	70	34	36
	Elementary School	725	520	ADT	Average Rate = 1.29	936	468	468
	(Proposed Elementary School)	Students		AM Peak	Average Rate = 0.45	326	179	147
				PM Peak (Generator)	Average Rate = 0.28	203	91	112
				PM Peak	Average Rate = 0.15	109	53	56
A	(71% of Proposed School Trips Assigned to global distribution)			AM Peak	Average Rate = 0.45	231	127	104
				PM Peak	Average Rate = 0.15	78	38	40
B	(14% of Proposed School Trips Assigned as Internal trips to/from Belvedere/Shannon Glenn)			AM Peak	Average Rate = 0.45	46	25	21
				PM Peak	Average Rate = 0.15	15	7	8
C	(2% of Proposed School Trips assigned as Brand Road trips to/from Belvedere Shannon Glenn)			AM Peak	Average Rate = 0.45	7	4	3
				PM Peak	Average Rate = 0.15	2	1	1
D	(13% of Proposed School Trips assigned to/from the Riviera Development)			AM Peak	Average Rate = 0.45	42	23	19
				PM Peak	Average Rate = 0.15	14	7	7

Riviera

Traffic Impact Study

Trip Generation Calculations

Institute of Transportation Engineers, 9th Edition

Land Use	Square Feet or Units	ITE Code	Time Period	ITE Formula	Total Trips	Trips Entering	Trips Exiting
Single Family - Detached	248 units	210	ADT	Ln(T)=0.92Ln(x)+2.72	2,422	1,211	1,211
			AM Peak	T=0.70(x)+9.74	183	46	137
			PM Peak	Ln(T)=0.90Ln(x)+0.51	238	150	88
Elementary School (Proposed Elementary School)	725 Students	520	ADT	Average Rate = 1.29	936	468	468
			AM Peak	Average Rate = 0.45	326	179	147
			PM Peak (Generator)	Average Rate = 0.28	203	91	112
			PM Peak	Average Rate = 0.15	109	53	56
TOTAL			ADT		3358	1,679	1,679
			AM Peak		509	225	284
			PM Peak		347	203	144

City of Dublin Community Plan Trip Generation

Land Use	Square Feet or Units	ITE Code	Time Period	ITE Formula	Total Trips	Trips Entering	Trips Exiting
Golf Course	18 Holes	430	ADT	Average Rate = 35.74	644	322	322
			AM Peak	Average Rate = 2.06	37	29	8
			PM Peak	Average Rate = 2.92	53	27	26
Comparison to Site Generated Trips				***ADT***	***-2,714***	***-1,357***	***-1,357***
				AM TOTAL	***-472***	***-196***	***-276***
				PM TOTAL	***-294***	***-176***	***-118***

AM PEAK HOUR VOLUMES

Riviera
Traffic Impact Study
Traffic Volume Calculations

2014 Full Build Traffic - w/ Hyland-Croy Site Drive — **AM Peak Hour H1=B+G**

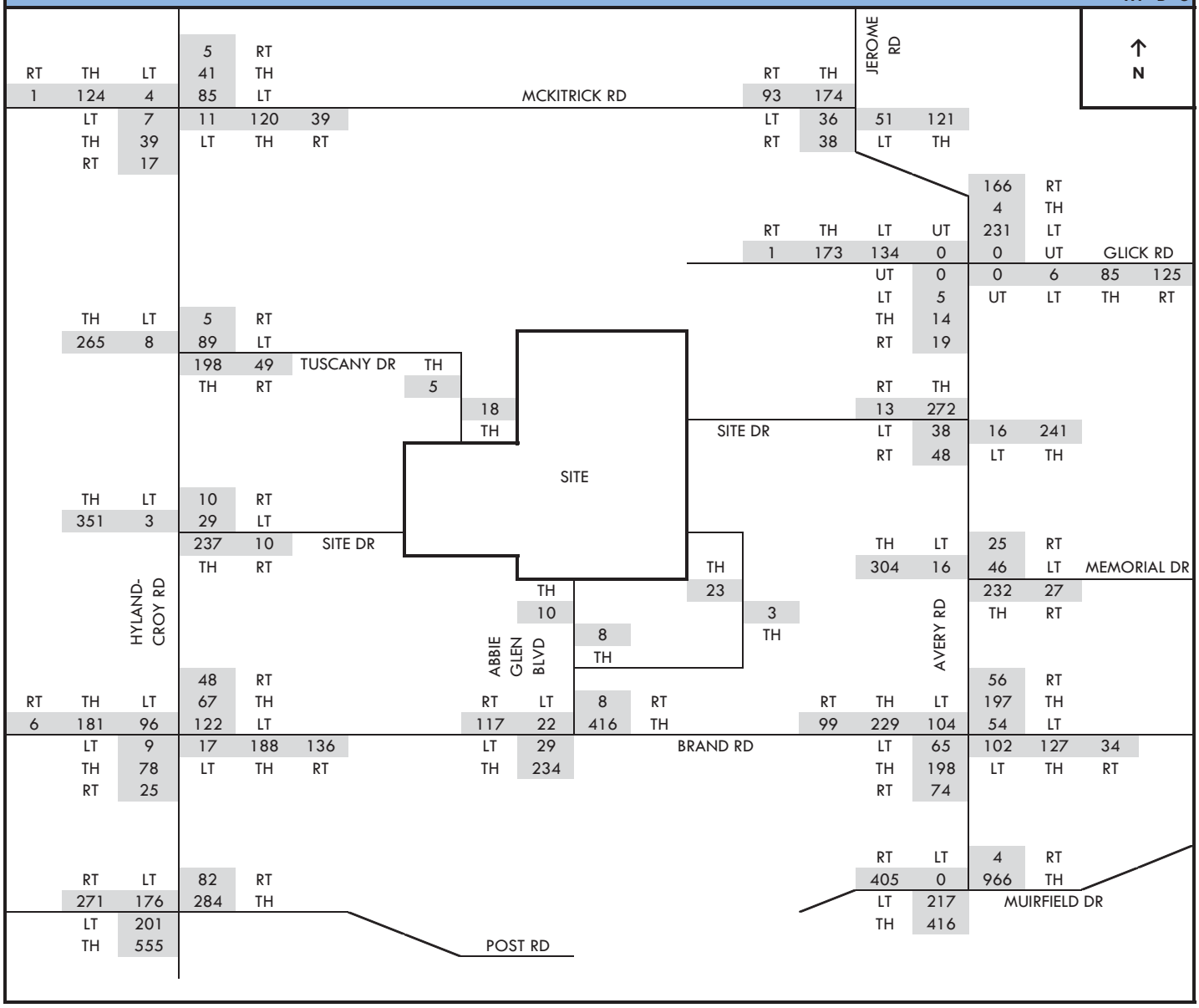

Riviera
Traffic Impact Study
Traffic Volume Calculations

2024 Full Build Traffic - w/ Hyland-Croy Site Drive — **AM Peak Hour H2=E+G**

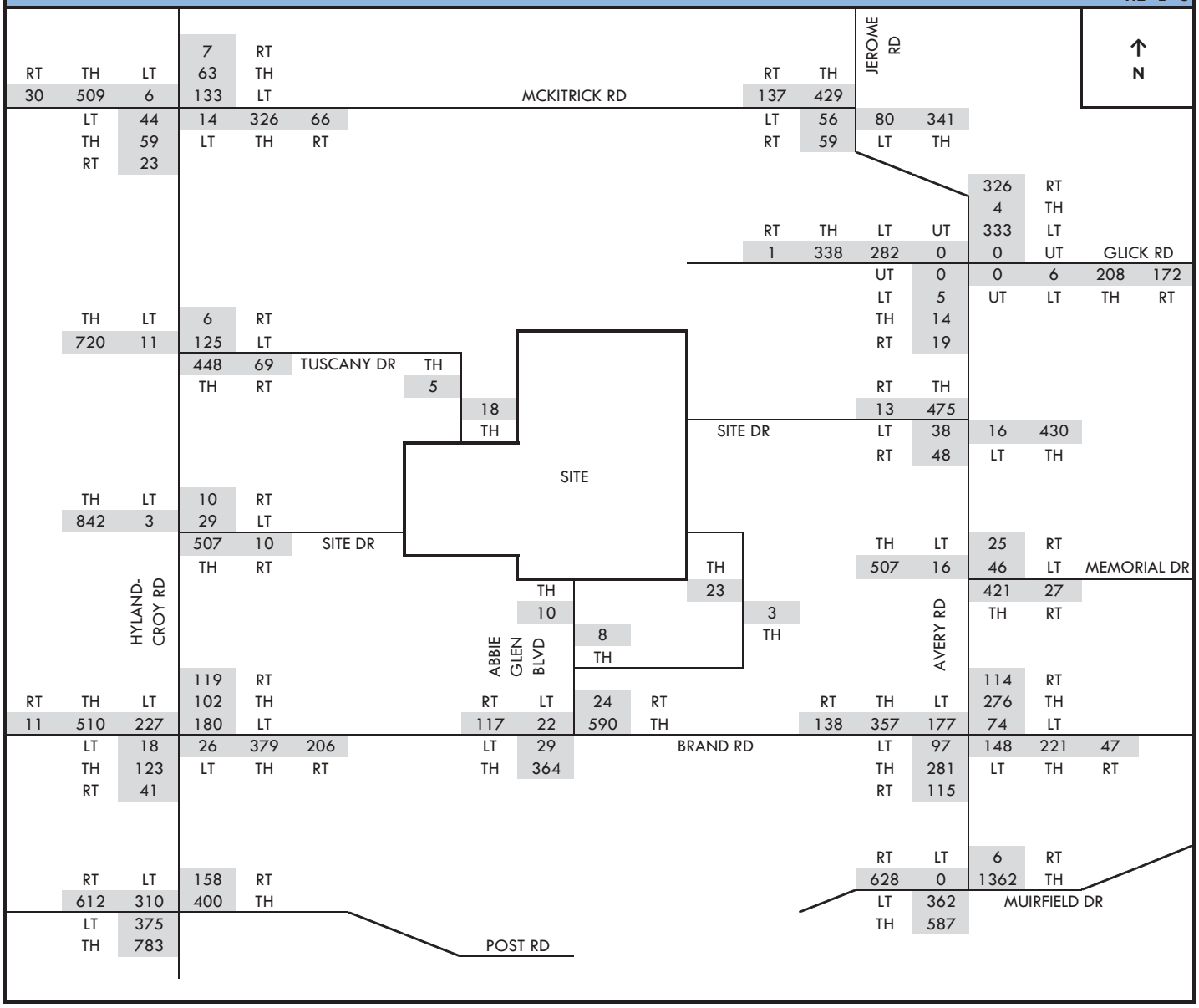

Riviera
Traffic Impact Study
Traffic Volume Calculations

2014 Full Build Traffic - w/o Hyland-Croy Site Drive — **AM Peak Hour K=B+J**

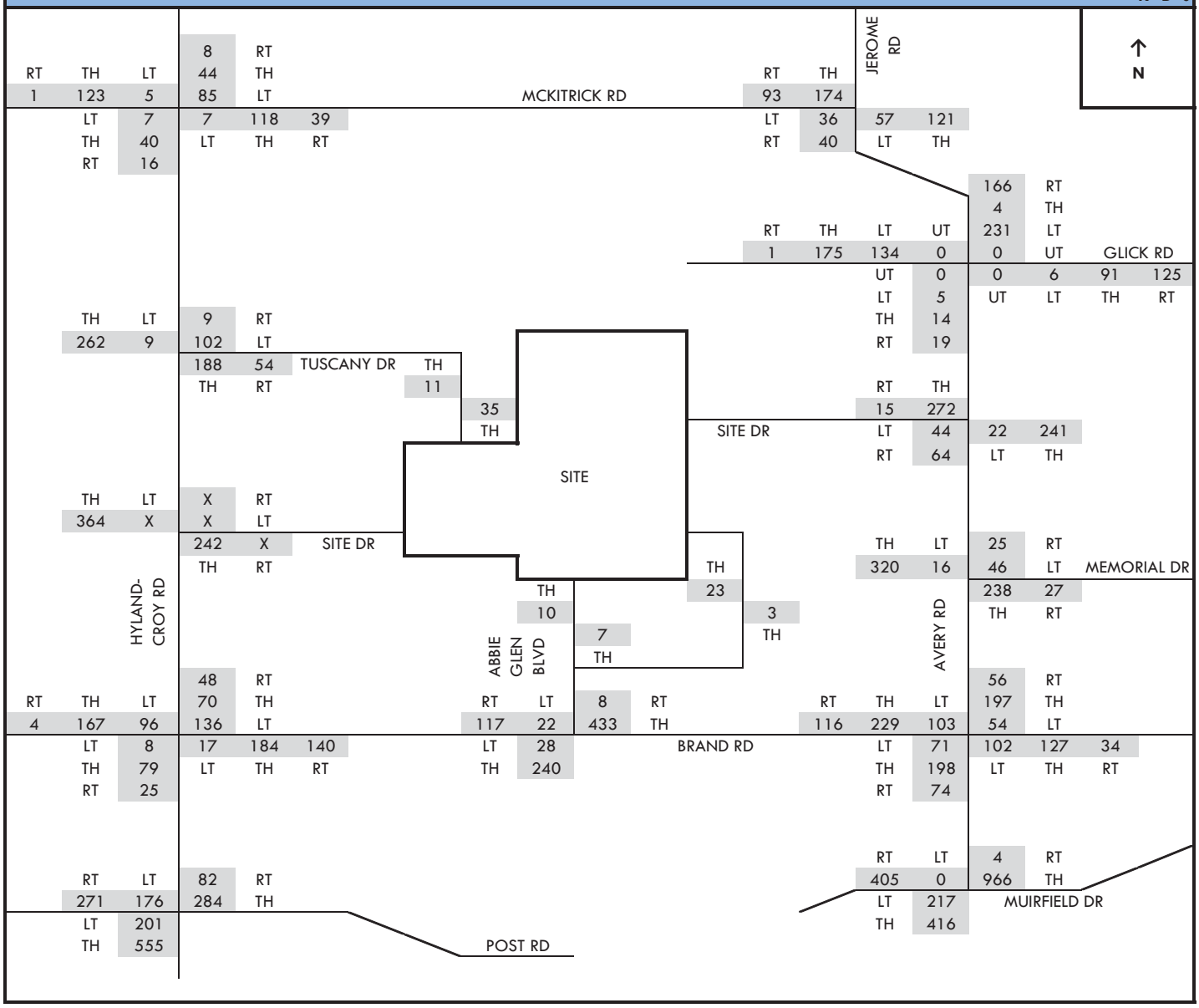

Riviera
Traffic Impact Study
Traffic Volume Calculations

2024 Full Build Traffic - w/o Hyland-Croy Site Drive — **AM Peak Hour L=E+J**

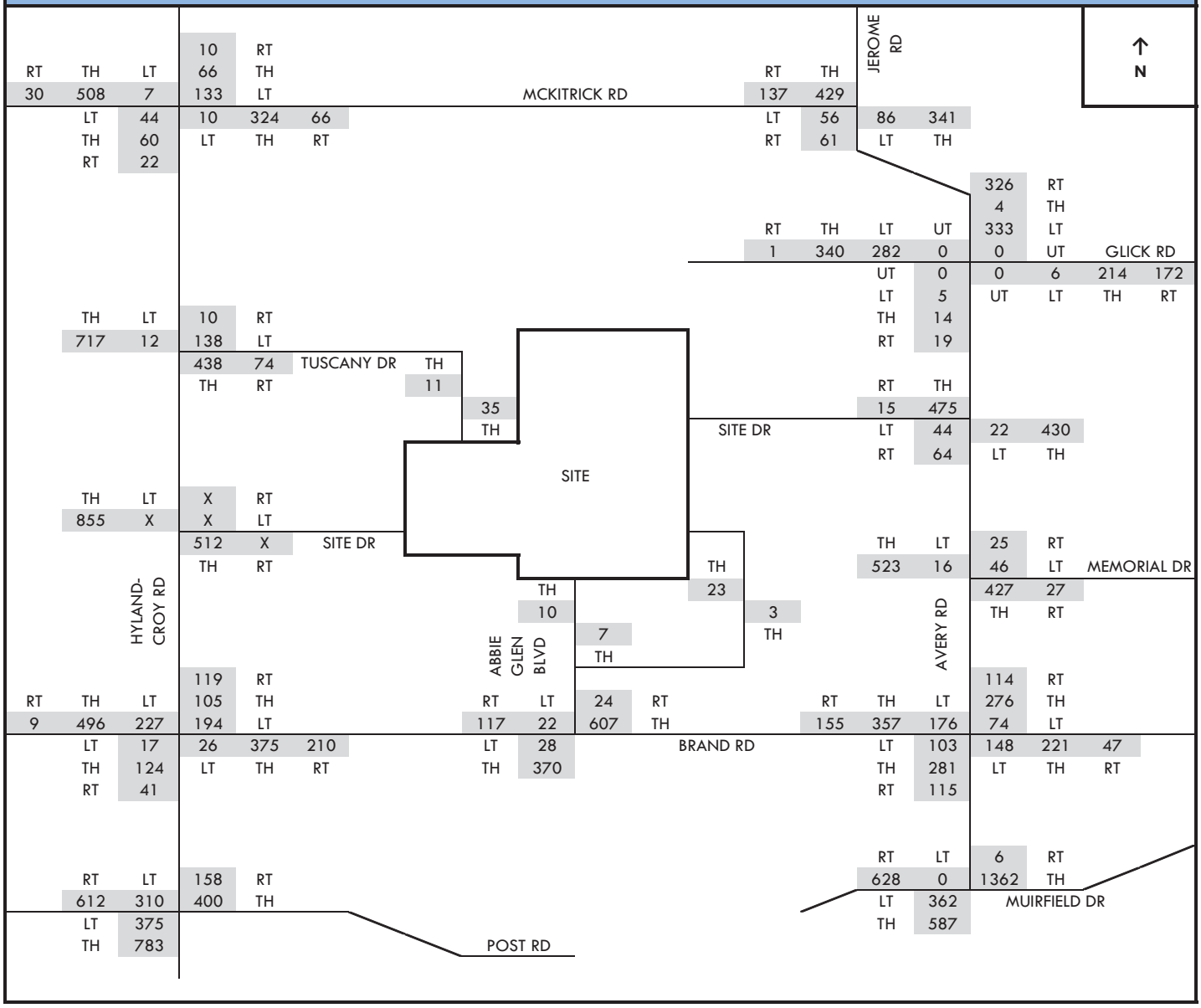

Riviera
Traffic Impact Study
Traffic Volume Calculations

Existing Deer Run Elementary Trip Distribution - w/ Hyland-Croy Site Drive **AM Peak Hour**
INBOUND **M1**

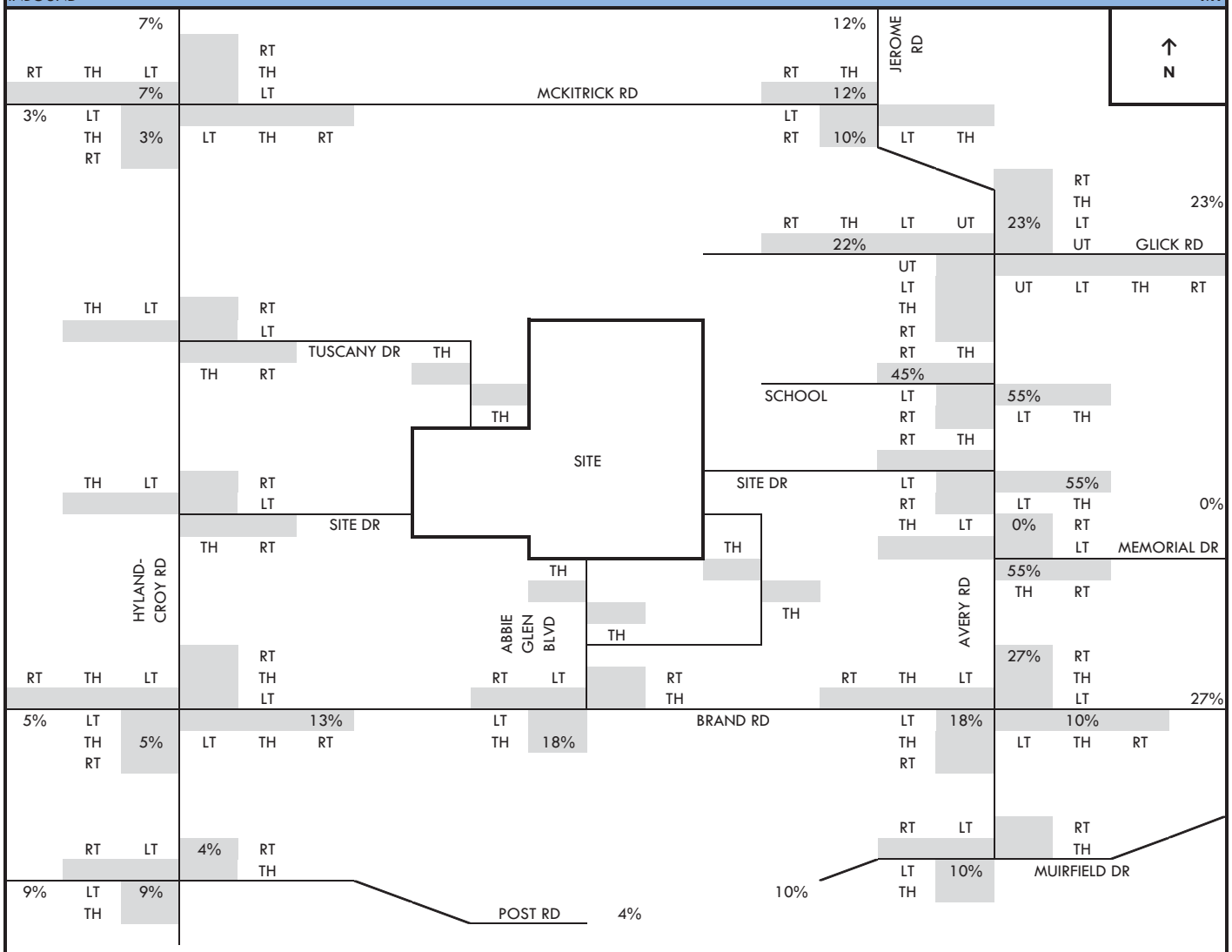

Riviera
Traffic Impact Study
Traffic Volume Calculations

Existing Deer Run Elementary Trip Distribution - w/ Hyland-Croy Site Drive **AM Peak Hour**
OUTBOUND **M2**

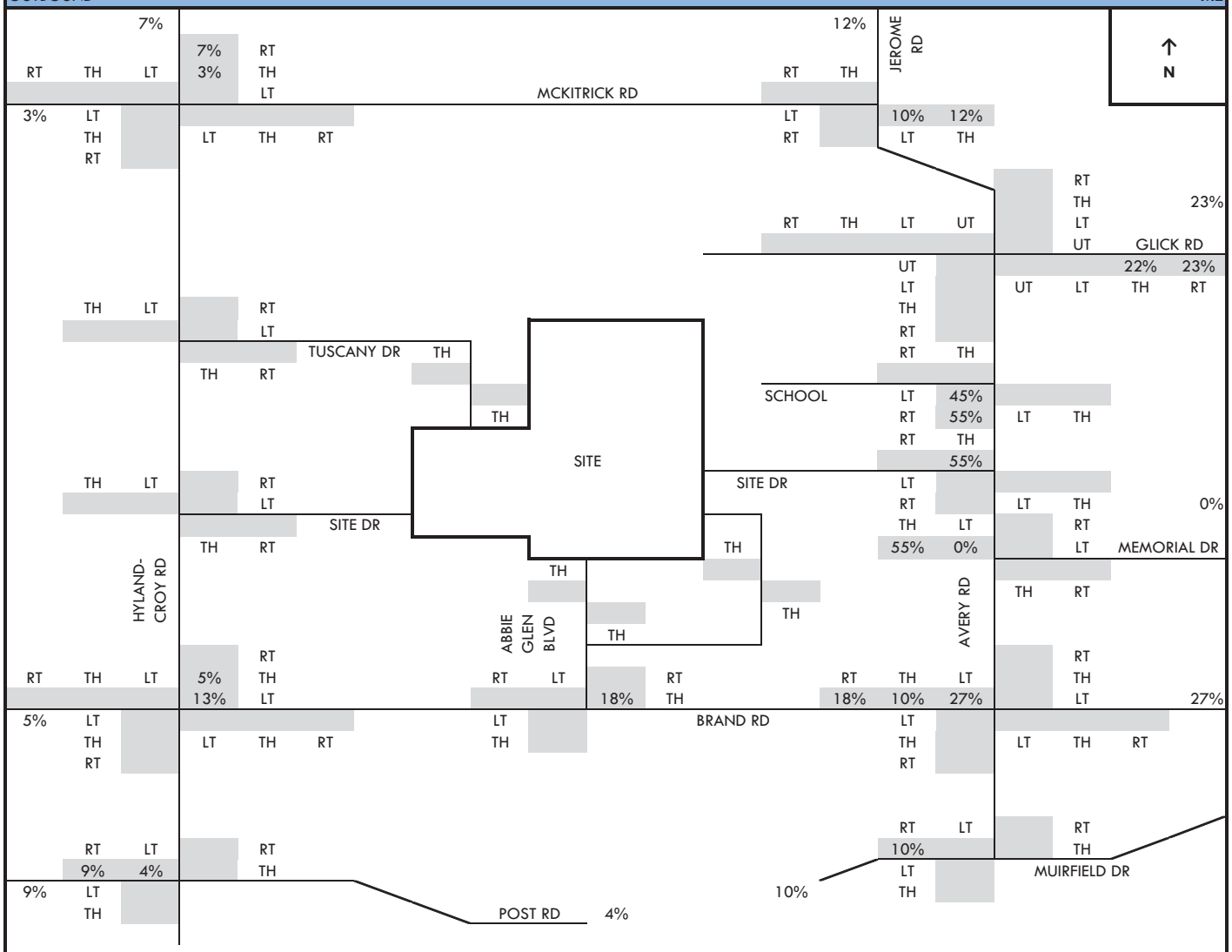

Riviera
Traffic Impact Study
Traffic Volume Calculations

Existing Deer Run Elementary Trip Assignment - w/ Hyland-Croy Site Drive **AM Peak Hour**
INBOUND **N1**

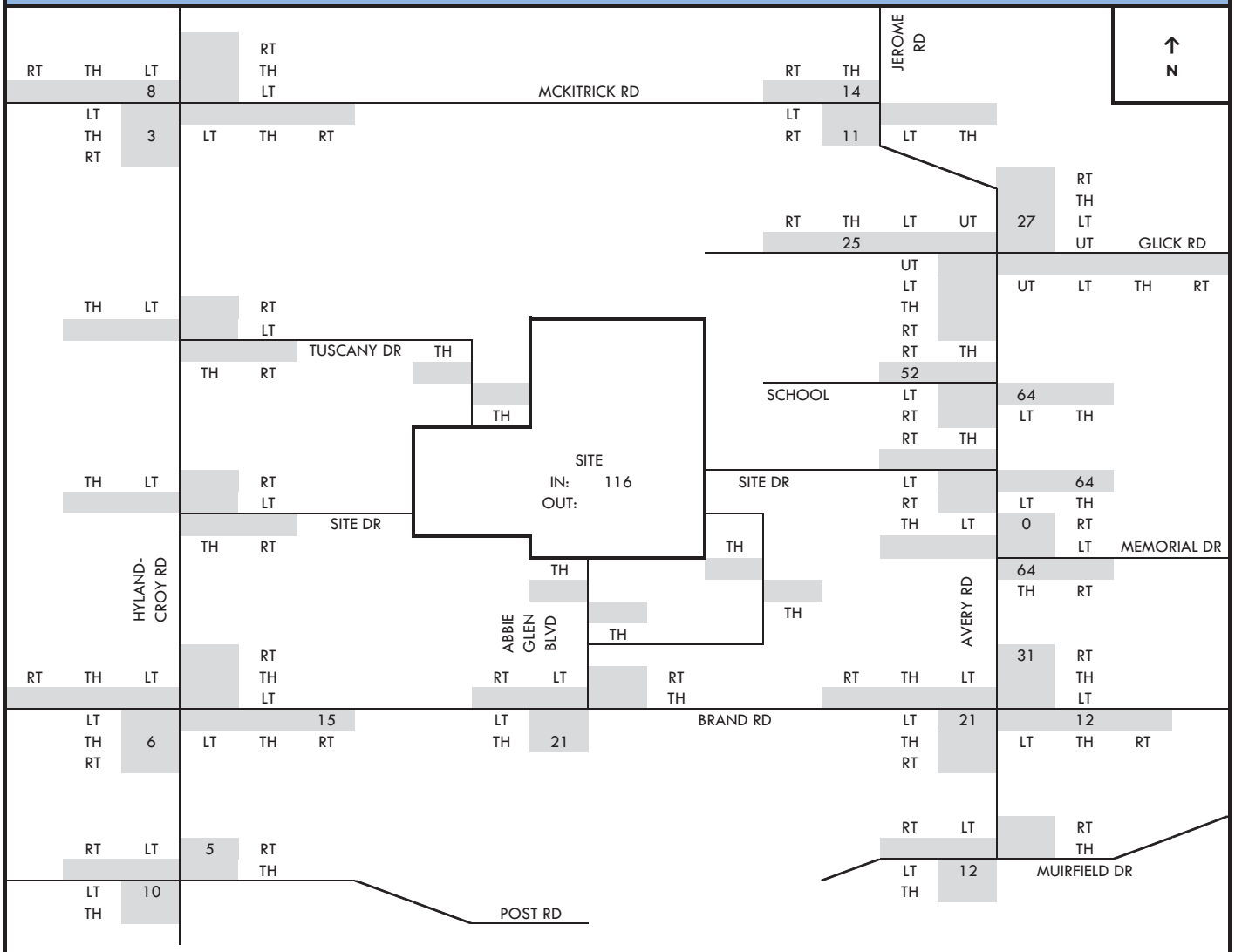

Riviera
Traffic Impact Study
Traffic Volume Calculations

Existing Deer Run Elementary Trip Assignment - w/ Hyland-Croy Site Drive **AM Peak Hour**
OUTBOUND **N2**

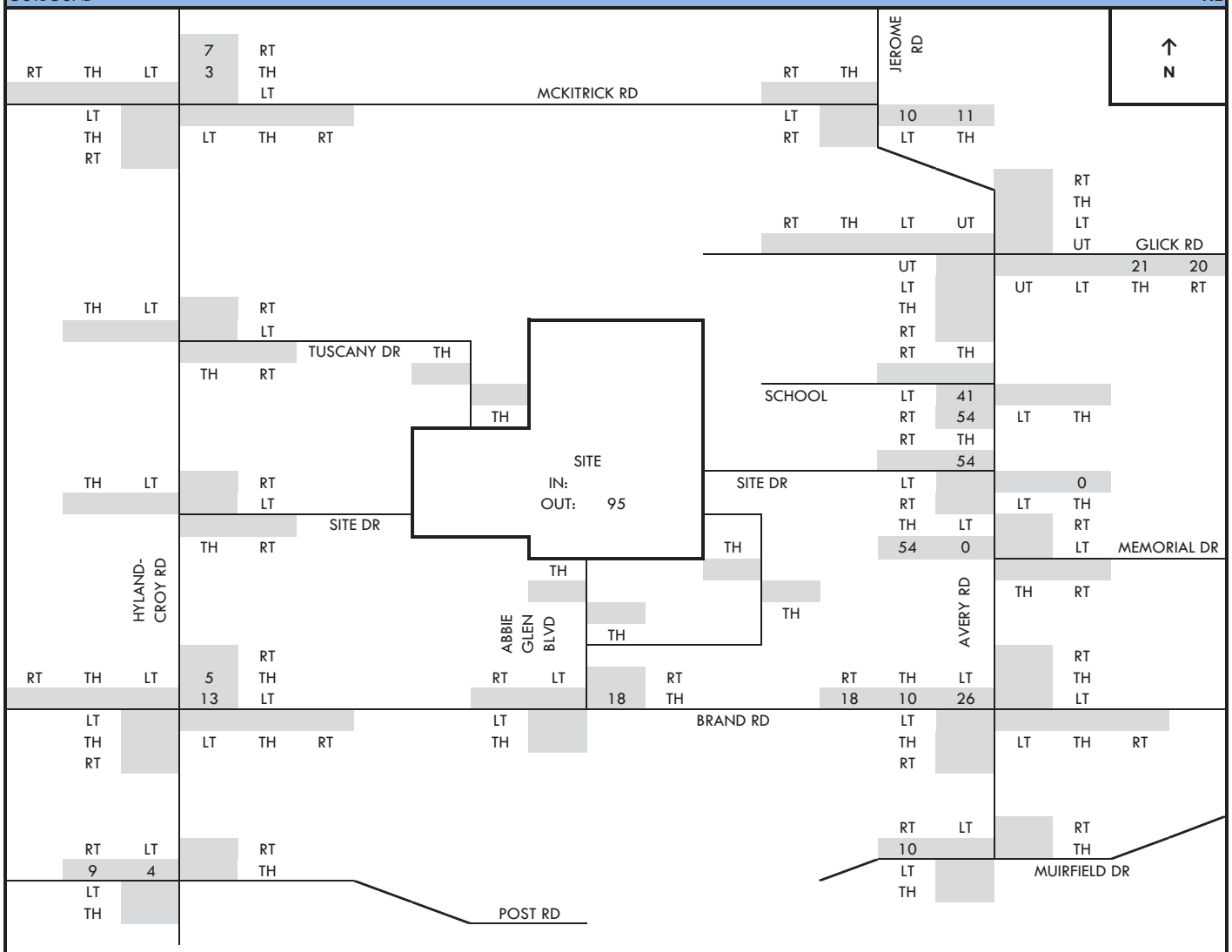

Riviera
Traffic Impact Study
Traffic Volume Calculations

Existing Deer Run Elementary Trips - w/ Hyland-Croy Site Drive — **AM Peak Hour N=N1+N2**

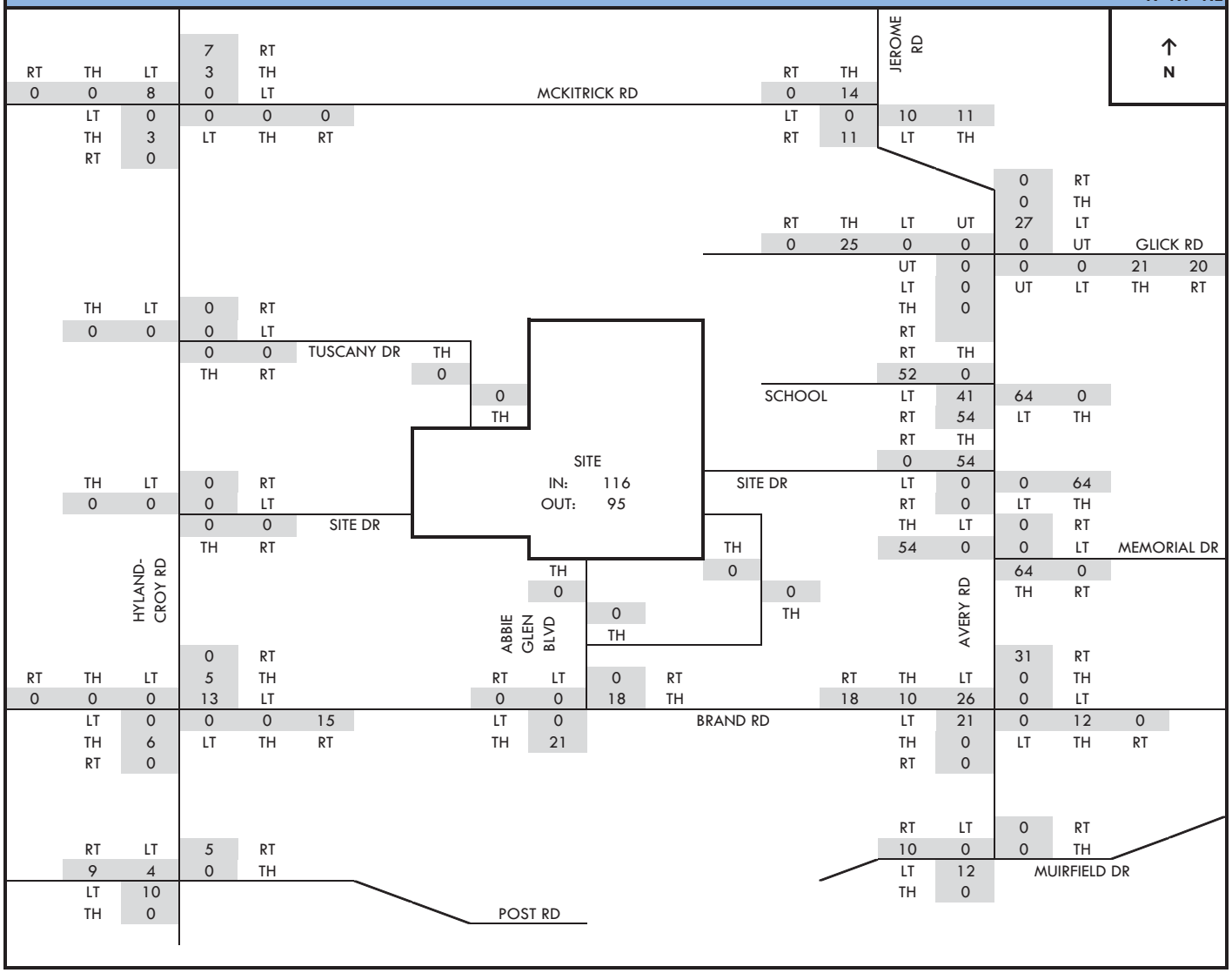

Proposed Elementary School Global Trip Distribution - w/ Hyland-Croy Site Drive **AM Peak Hour**
INBOUND **O1**

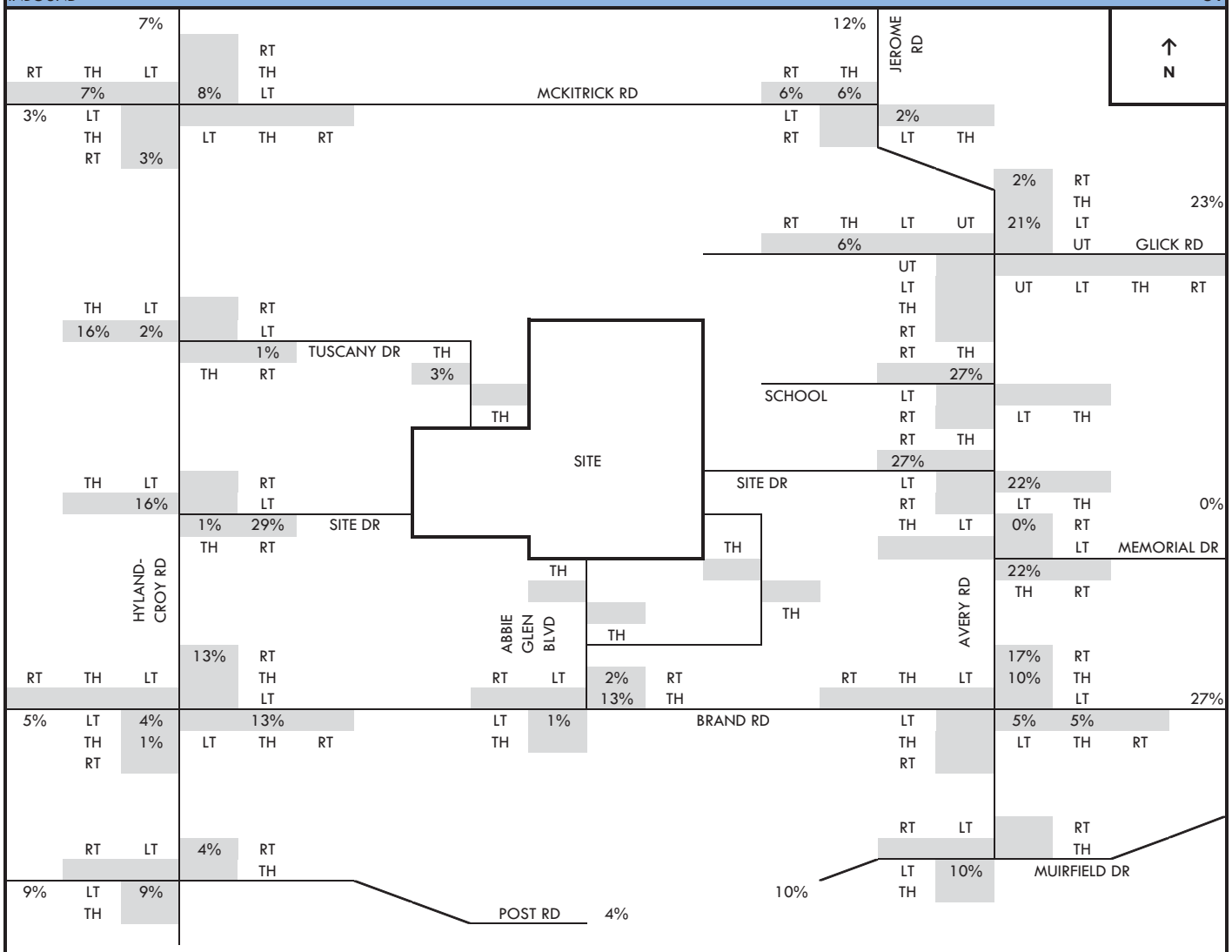

Traffic Volume Calculations

Proposed Elementary School Global Trip Distribution - w/ Hyland-Croy Site Drive **AM Peak Hour**

OUTBOUND **O2**

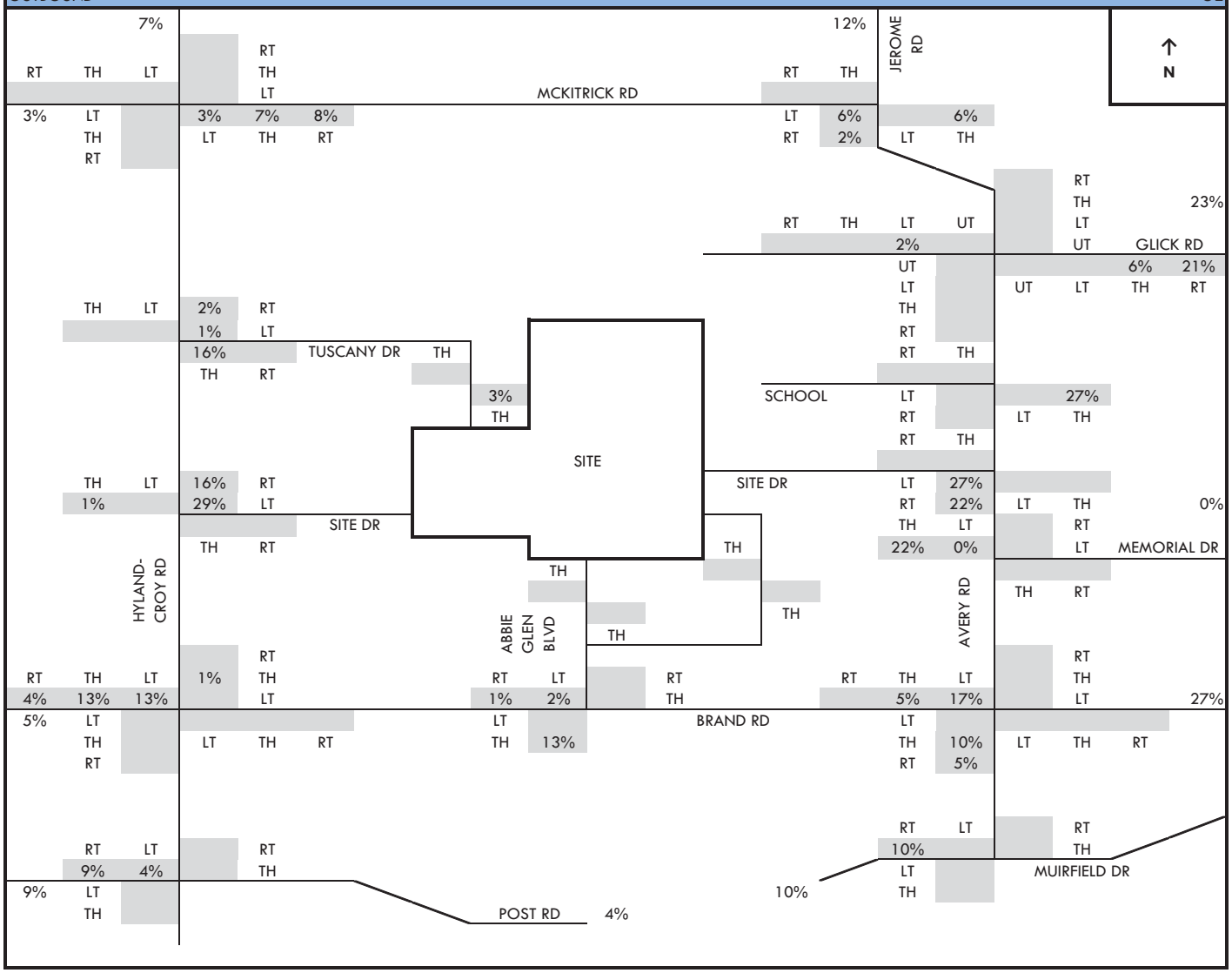

Riviera
Traffic Impact Study
Traffic Volume Calculations

Proposed Elementary School Trip Assignment - w/ Hyland-Croy Site Drive — **AM Peak Hour**
INBOUND (INTERNAL TRIPS REMOVED) — **P1**

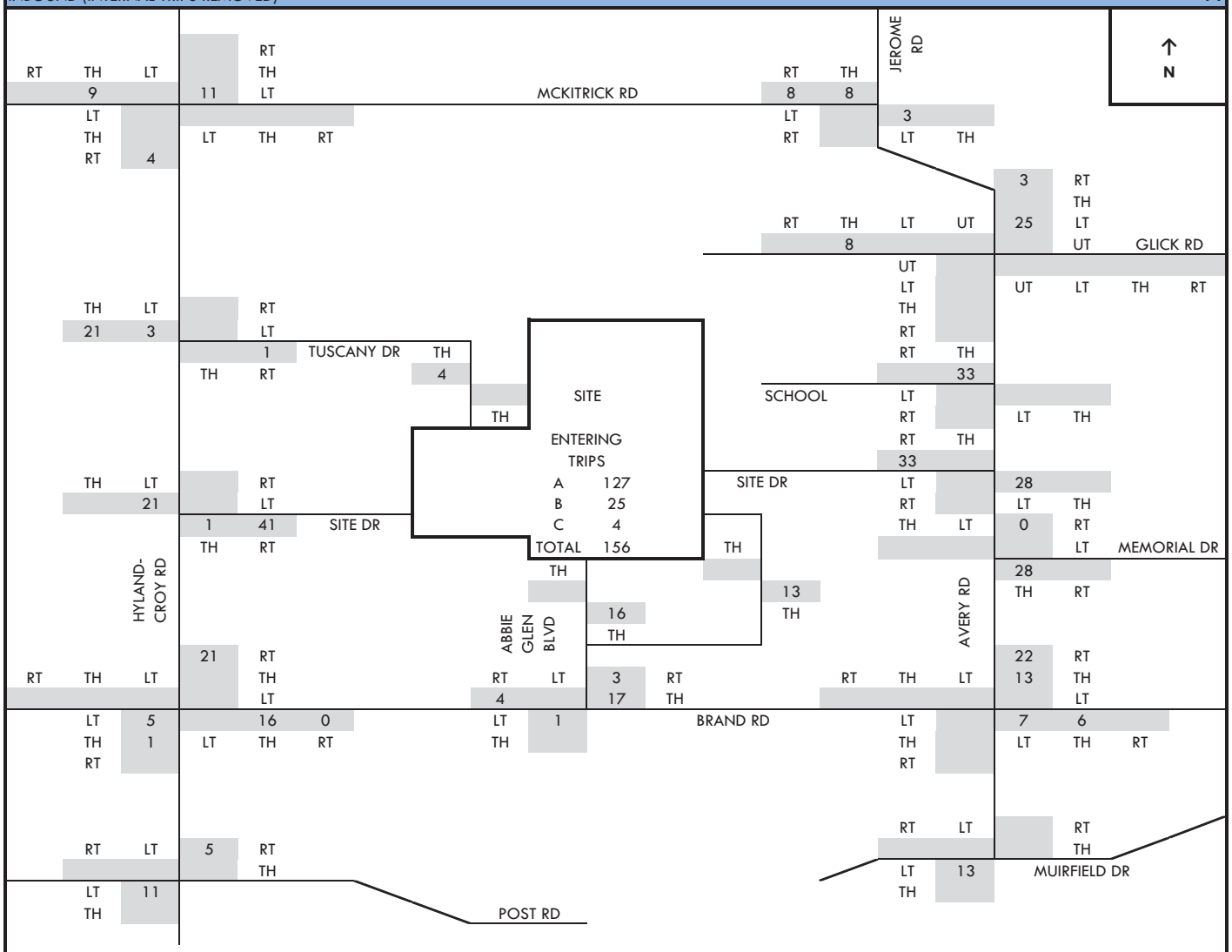

Riviera
Traffic Impact Study
Traffic Volume Calculations

Proposed Elementary School Trip Assignment - w/ Hyland-Croy Site Drive — **AM Peak Hour**
OUTBOUND (INTERNAL TRIPS REMOVED) — **P2**

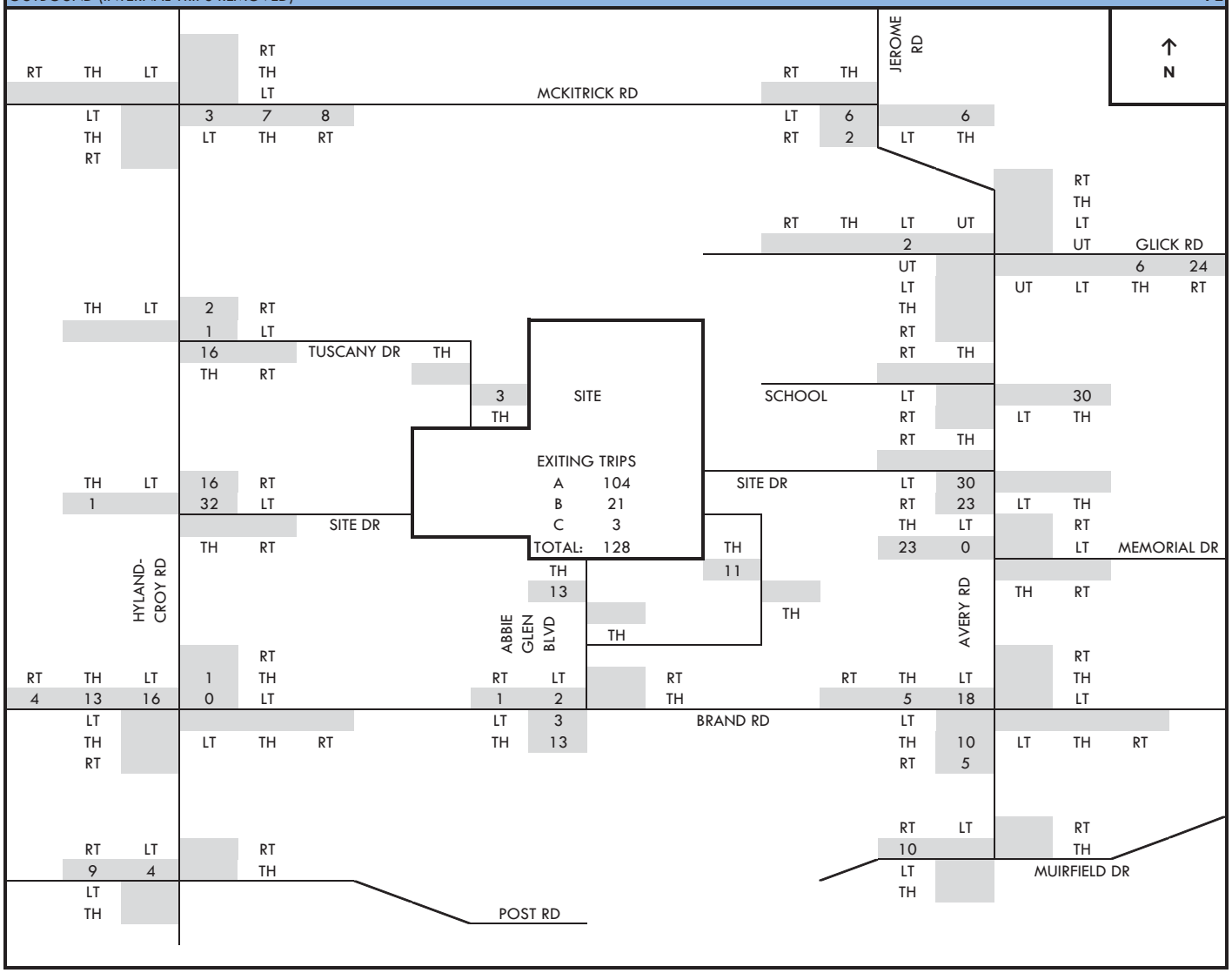

Riviera
Traffic Impact Study
Traffic Volume Calculations

Proposed Elementary School Trips - w/ Hyland-Croy Site Drive — **AM Peak Hour P=P1+P2**

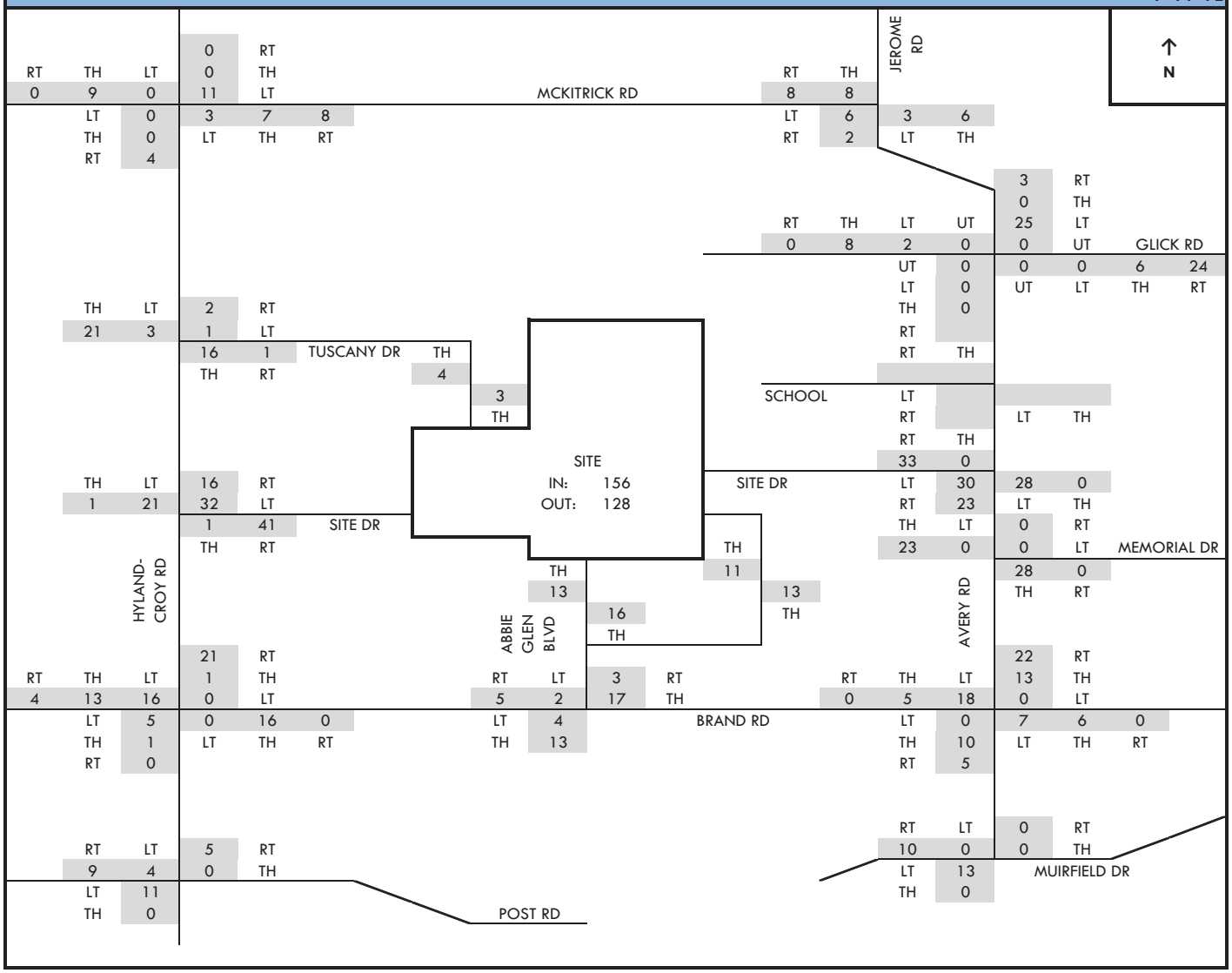

Riviera
Traffic Impact Study
Traffic Volume Calculations

Adjusted School Trips w/ Hyland-Croy Site Dr. — **AM Peak Hour Q1=P-N**

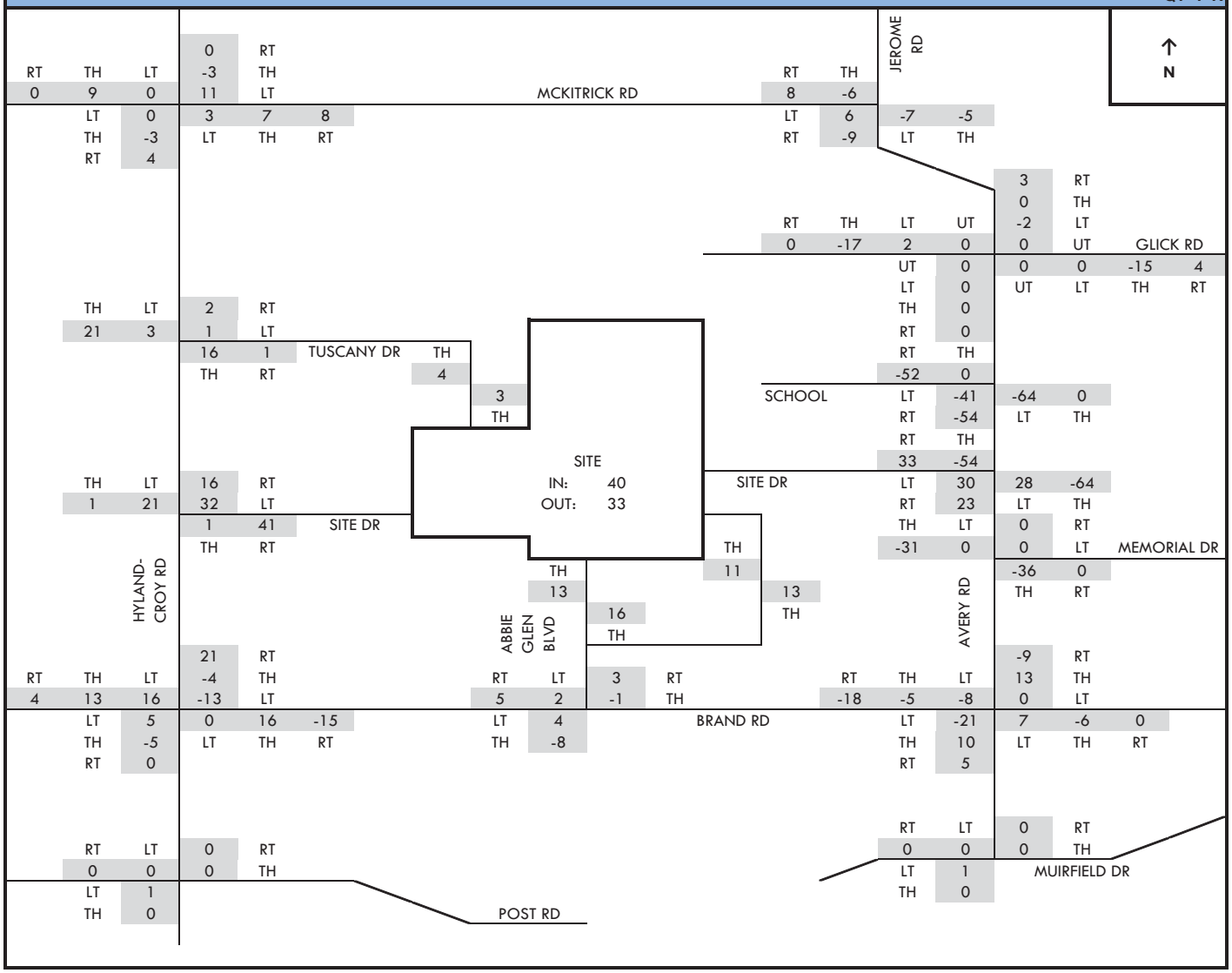

Riviera
Traffic Impact Study
Traffic Volume Calculations

2014 Full Build Traffic - w/ Hyland-Croy Site Drive — **AM Peak Hour**
(Existing Deer Run Trips Removed) — **Q2=H1-N**

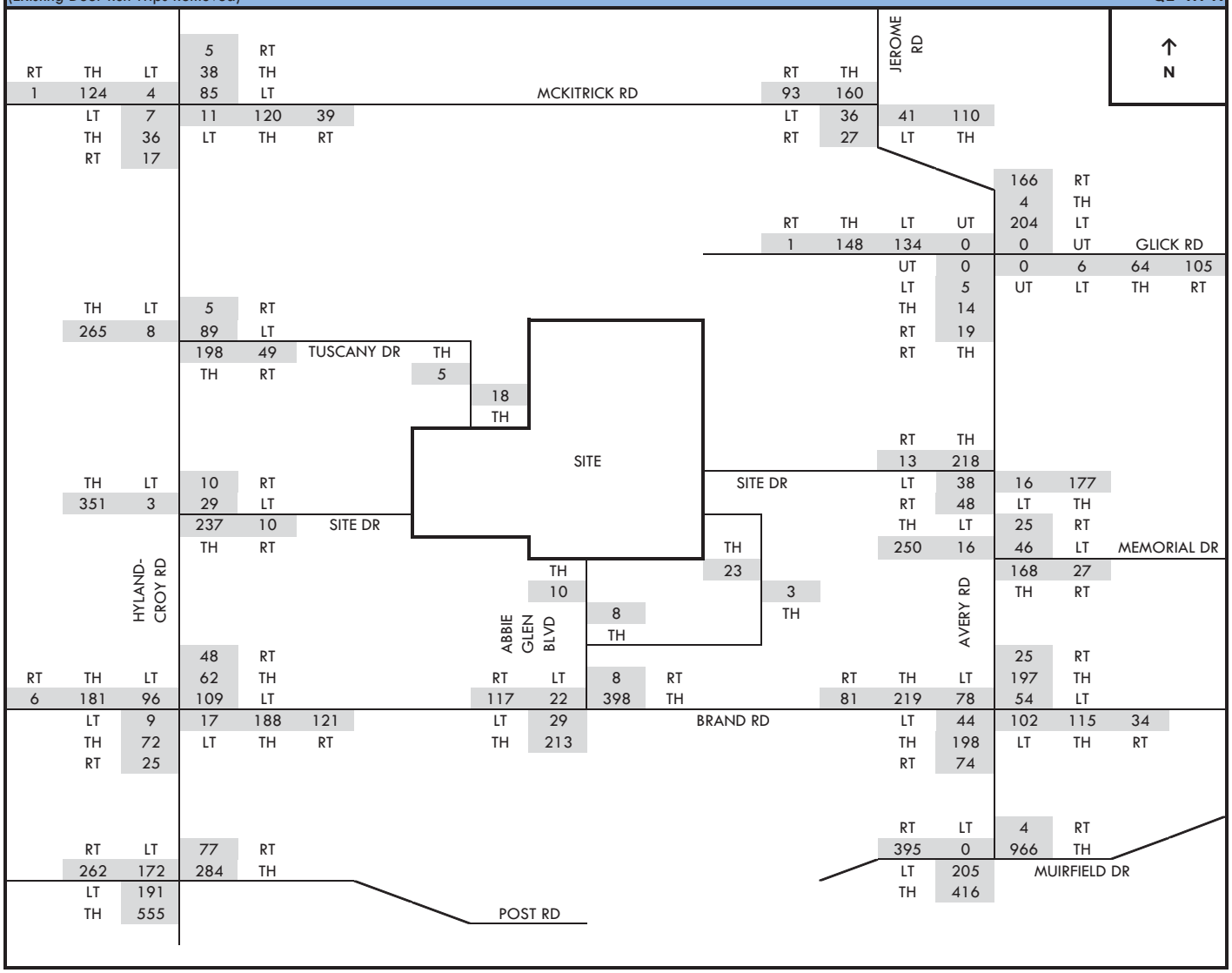

Riviera
Traffic Impact Study
Traffic Volume Calculations

2014 Full Build Traffic - w/ Hyland-Croy Site Drive — **AM Peak Hour**
w/ Proposed Elementary School — **Q=Q2+P**

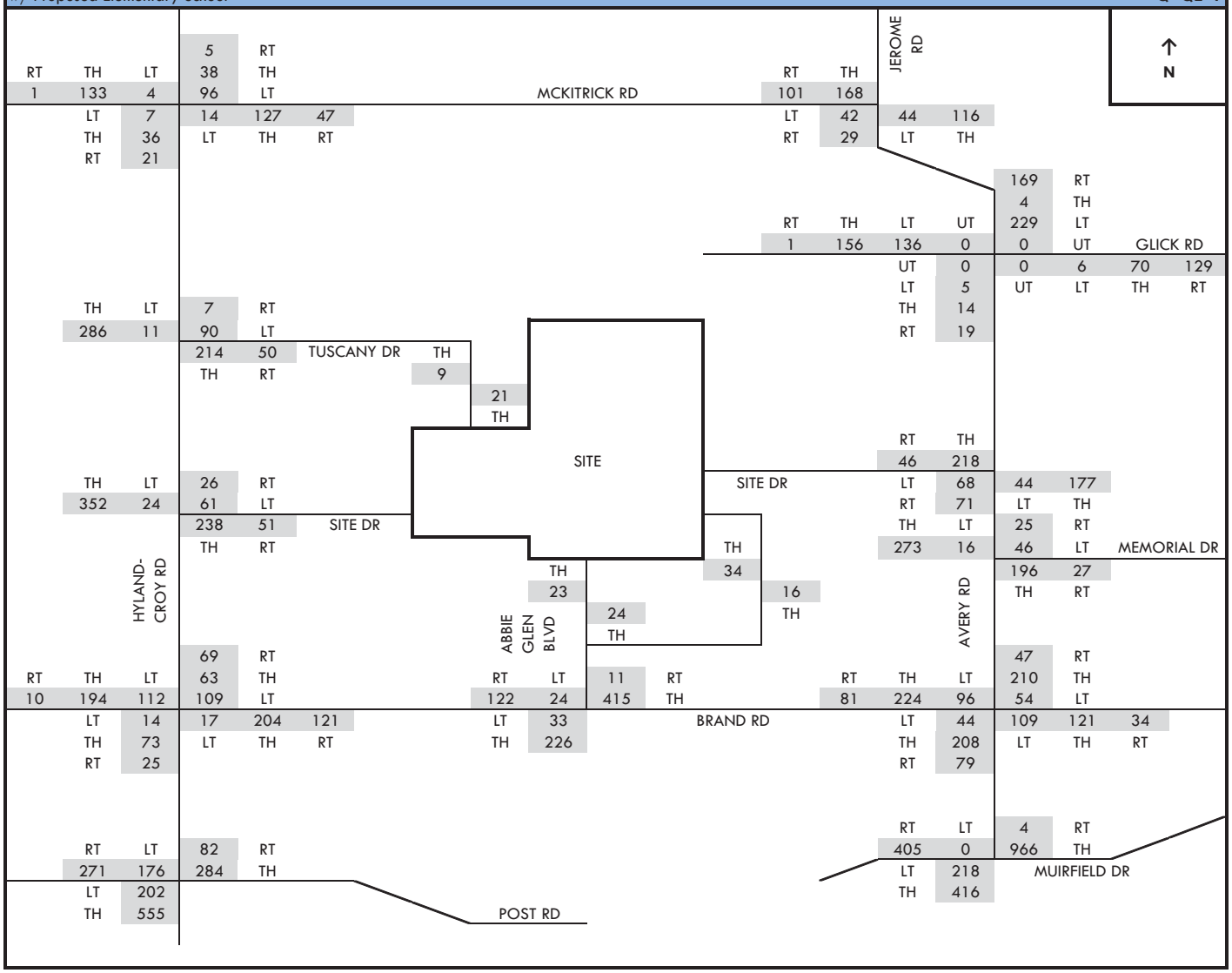

Riviera
Traffic Impact Study
Traffic Volume Calculations

2024 Full Build Traffic - w/ Hyland-Croy Site Drive — **AM Peak Hour**
(Existing Deer Run Trips Removed) — **R1=H2-N**

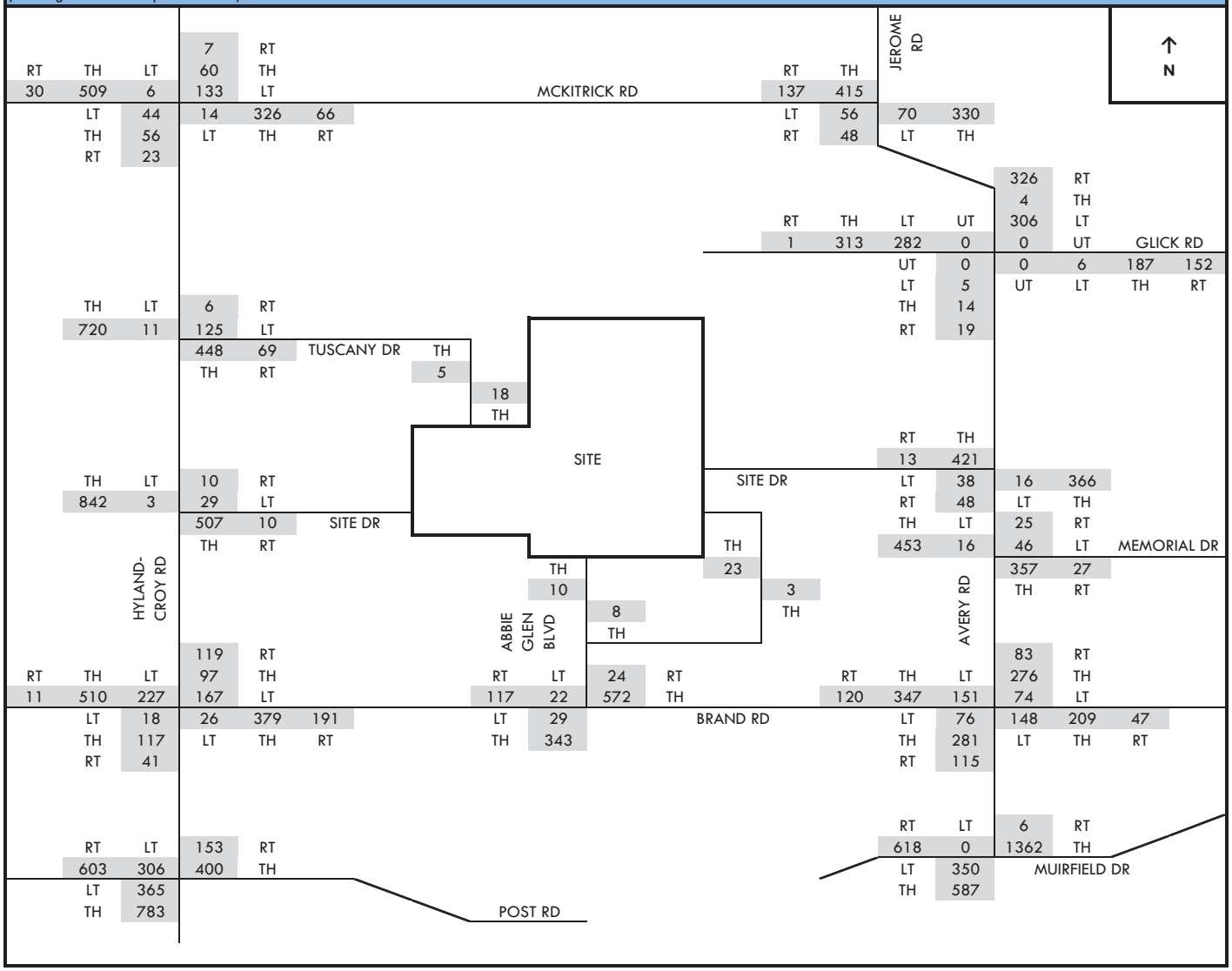

Riviera
Traffic Impact Study
Traffic Volume Calculations

2024 Full Build Traffic - w/ Hyland-Croy Site Drive — **AM Peak Hour**
w/ Proposed Elementary School — **R=R1+P**

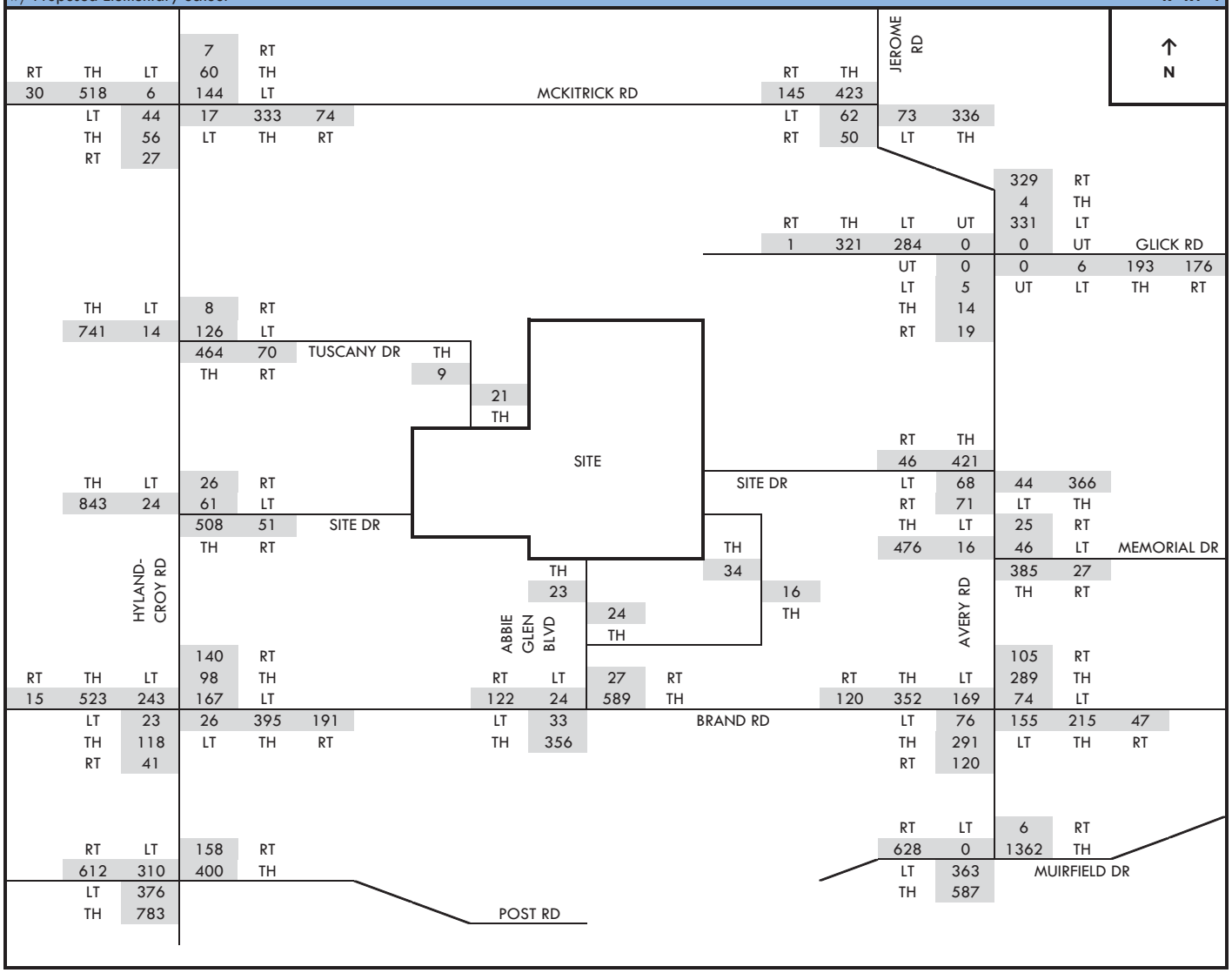

Riviera
Traffic Impact Study
Traffic Volume Calculations

Proposed Elementary School Global Trip Distribution - w/o Hyland-Croy Site Drive **AM Peak Hour**
INBOUND **S1**

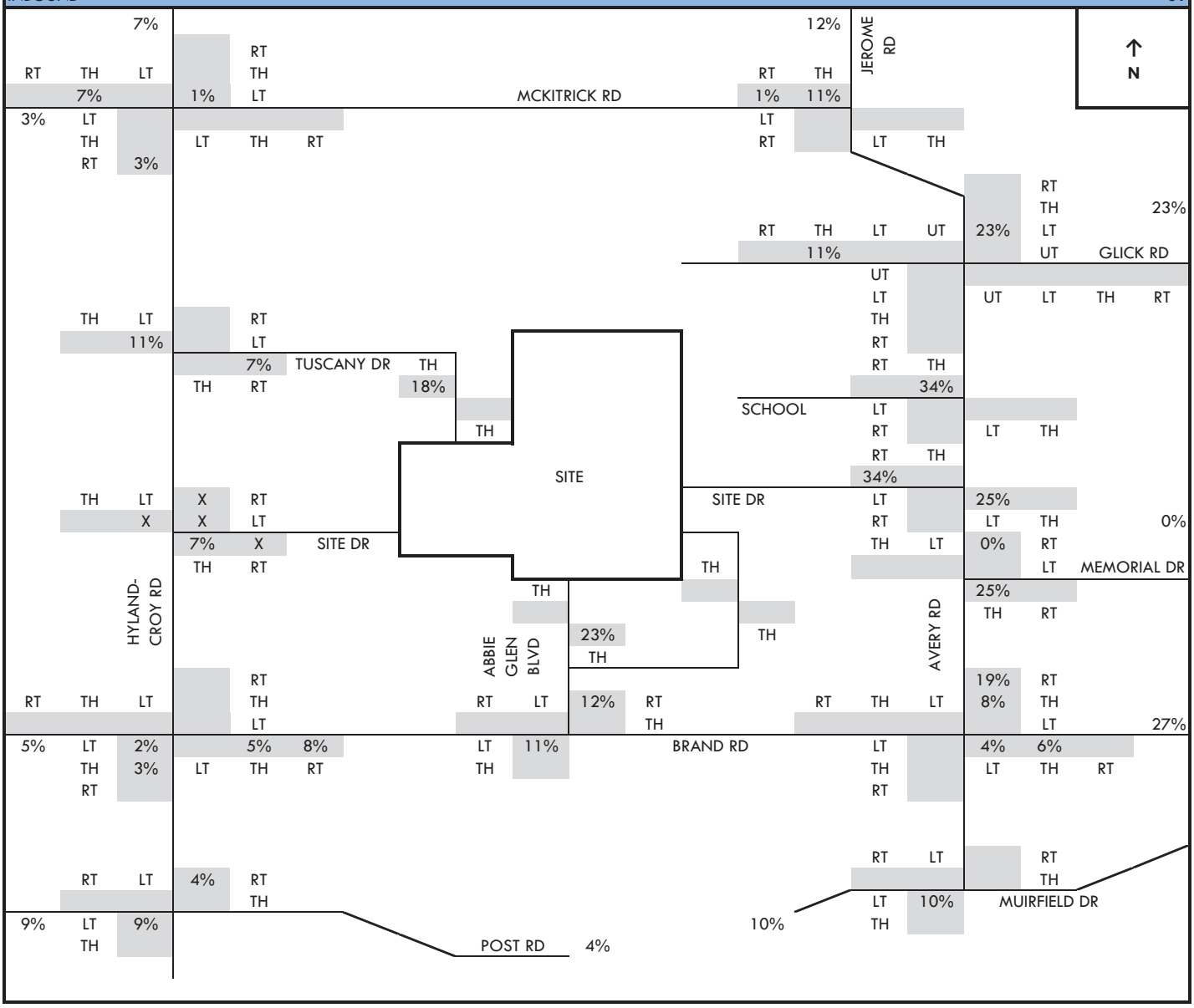

Riviera
Traffic Impact Study
Traffic Volume Calculations

Proposed Elementary School Global Trip Distribution - w/o Hyland-Croy Site Drive **AM Peak Hour**
OUTBOUND **S2**

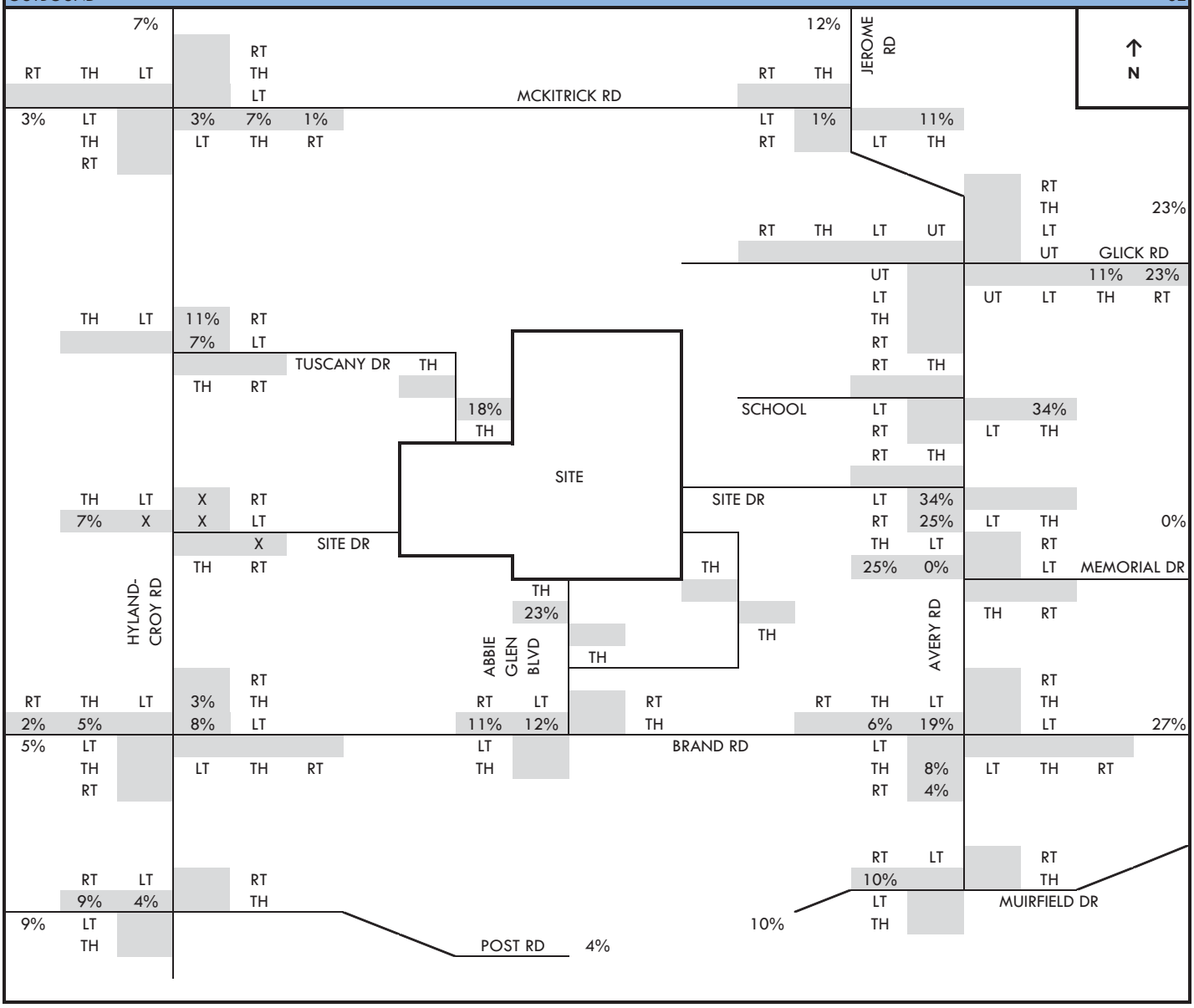

Riviera
Traffic Impact Study
Traffic Volume Calculations

Proposed Elementary School Trip Assignment - w/o Hyland-Croy Site Drive — **AM Peak Hour**
INBOUND (INTERNAL TRIPS REMOVED) — **T1**

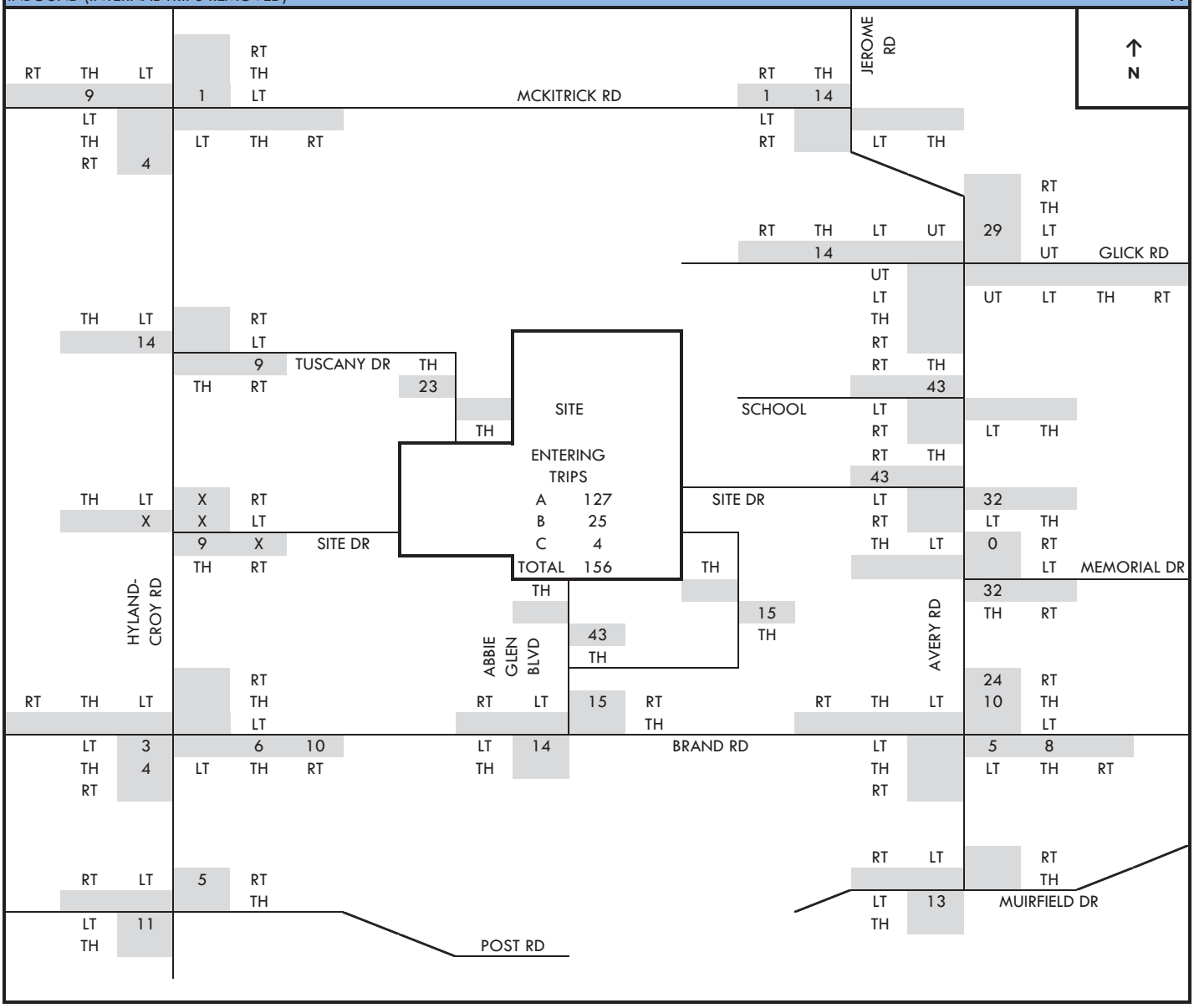

Riviera
Traffic Impact Study
Traffic Volume Calculations

Proposed Elementary School Trip Assignment - w/o Hyland-Croy Site Drive — **AM Peak Hour**
OUTBOUND (INTERNAL TRIPS REMOVED) — **T2**

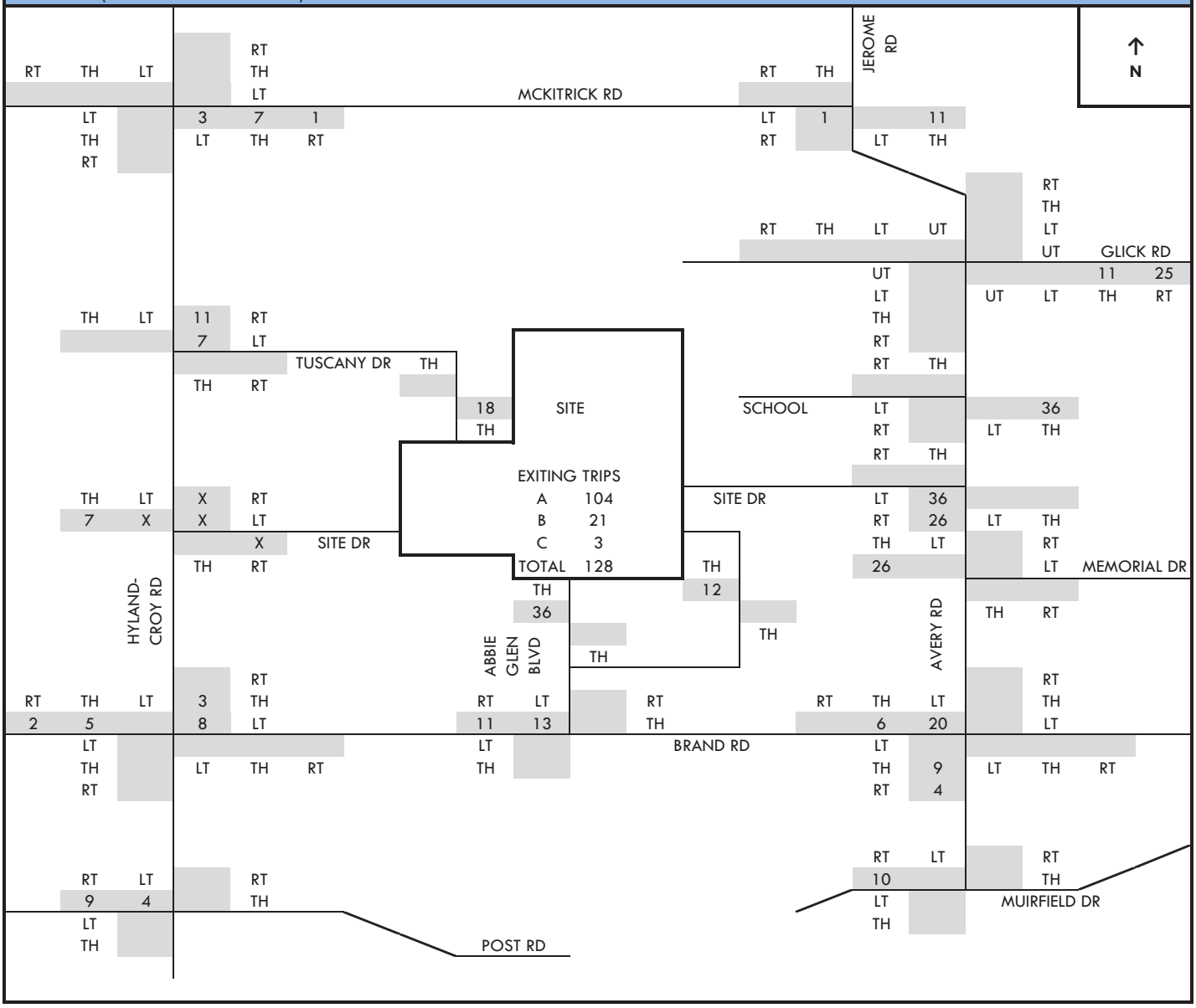

Riviera
Traffic Impact Study
Traffic Volume Calculations

Proposed Elementary School Trips - w/o Hyland-Croy Site Drive — **AM Peak Hour T=T1+T2**

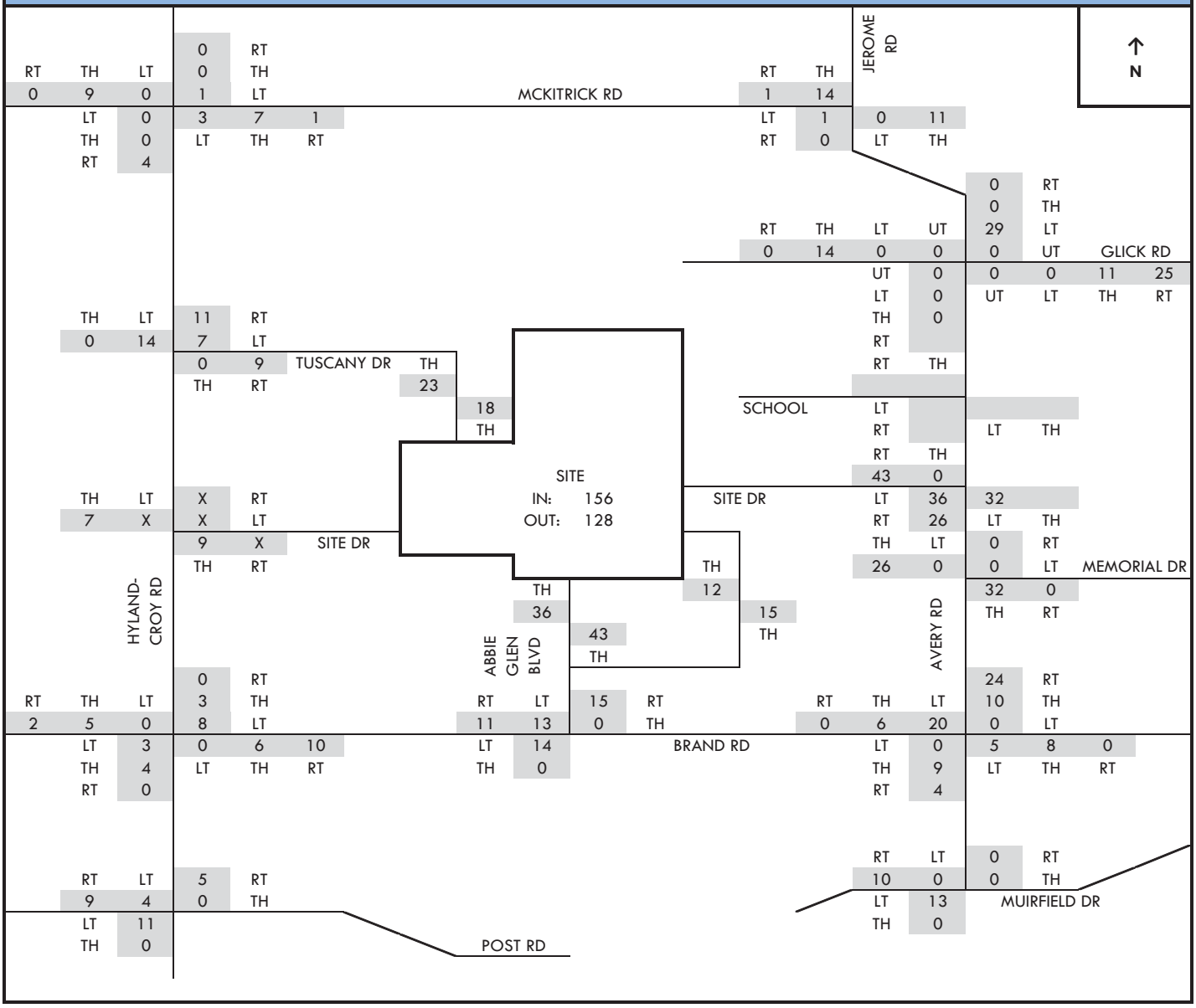

Riviera
Traffic Impact Study
Traffic Volume Calculations

Adjusted School Trips w/o Hyland-Croy Site Dr. — **AM Peak Hour** — **U1=T-N**

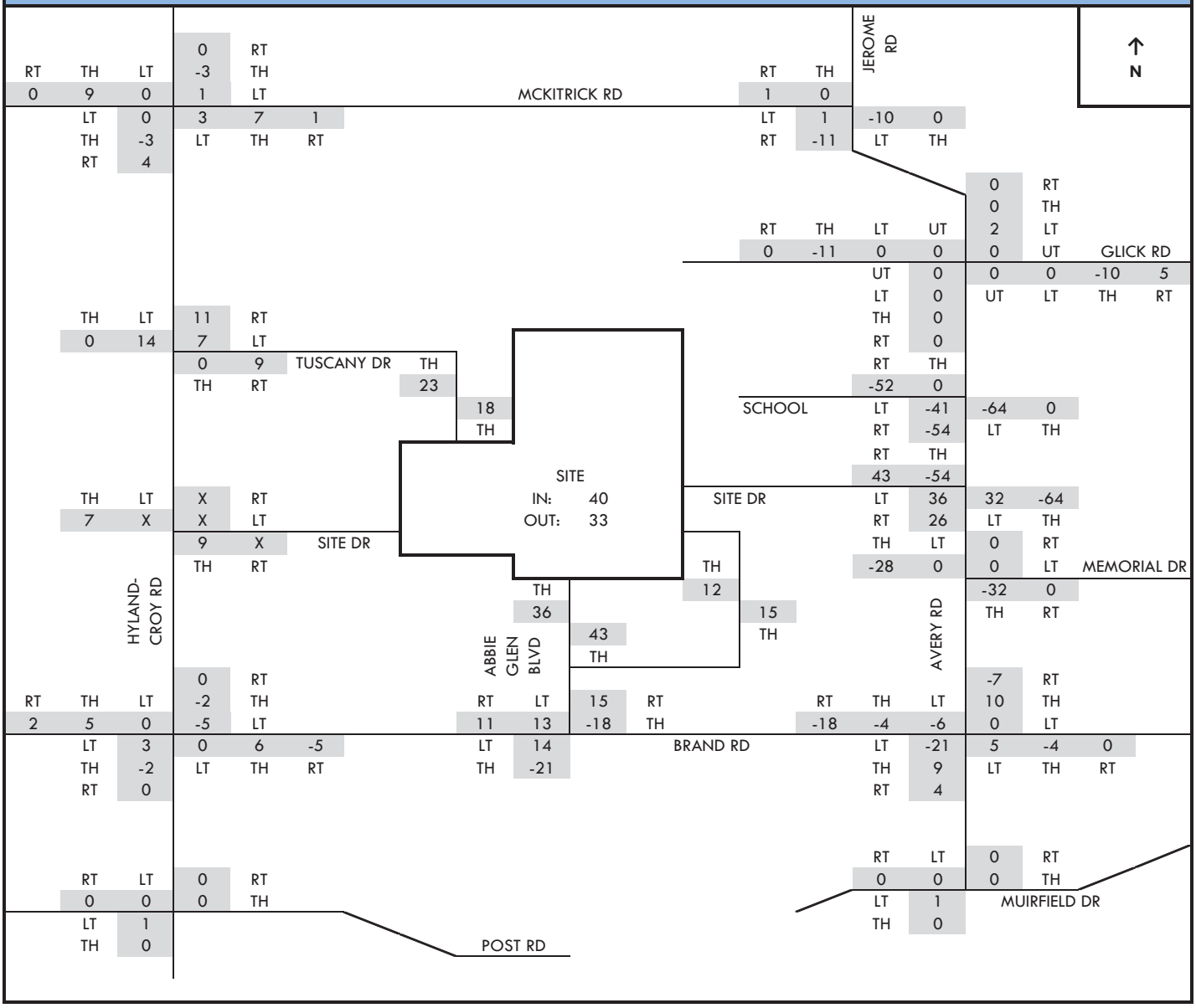

Riviera
Traffic Impact Study
Traffic Volume Calculations

2014 Full Build Traffic - w/o Hyland-Croy Site Drive — **AM Peak Hour**
(Existing Deer Run Trips Removed) — **U2=K-N**

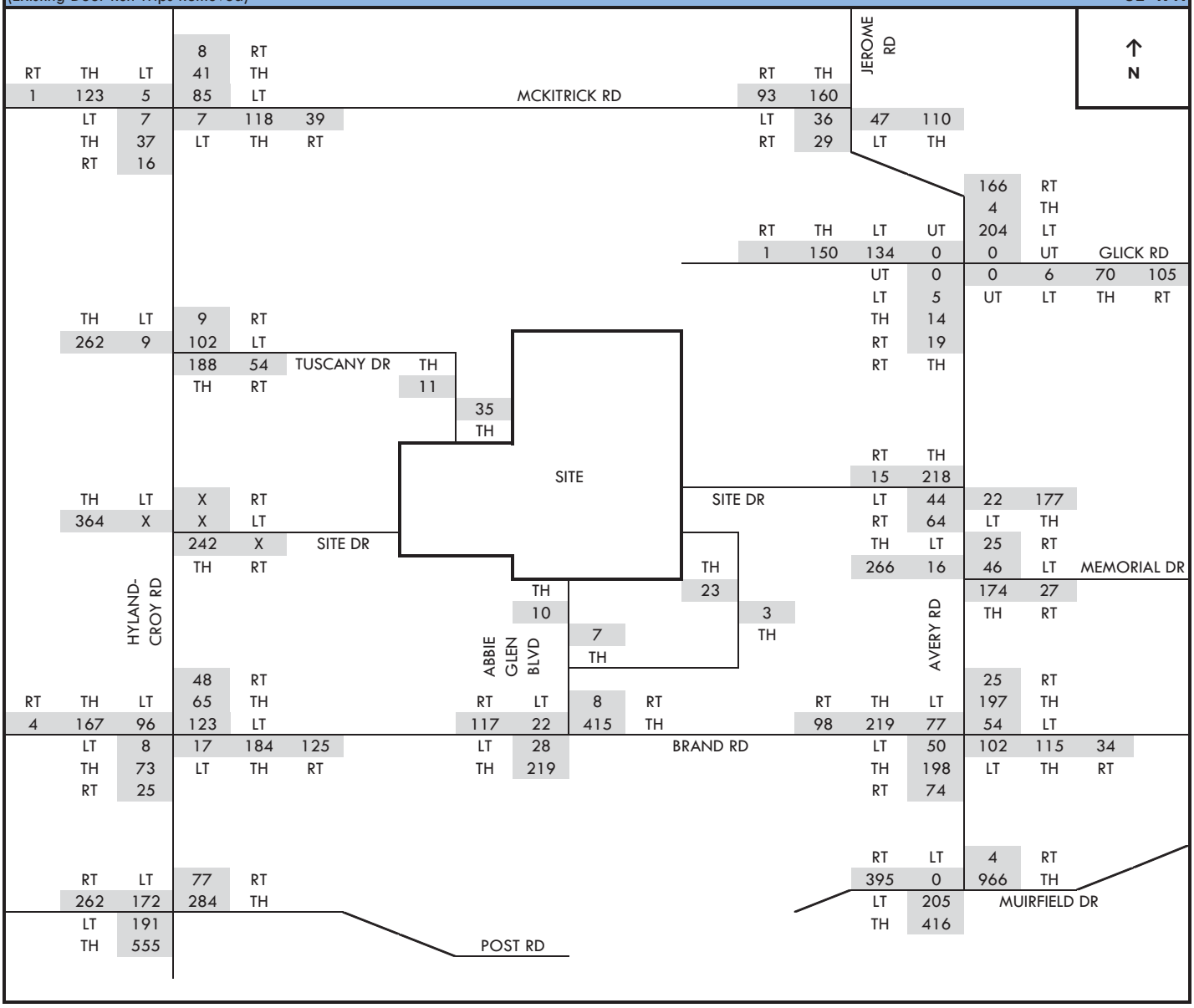

Riviera
Traffic Impact Study
Traffic Volume Calculations

2014 Full Build Traffic - w/o Hyland-Croy Site Drive — **AM Peak Hour**
w/ Proposed Elementary School — **U=U2+T**

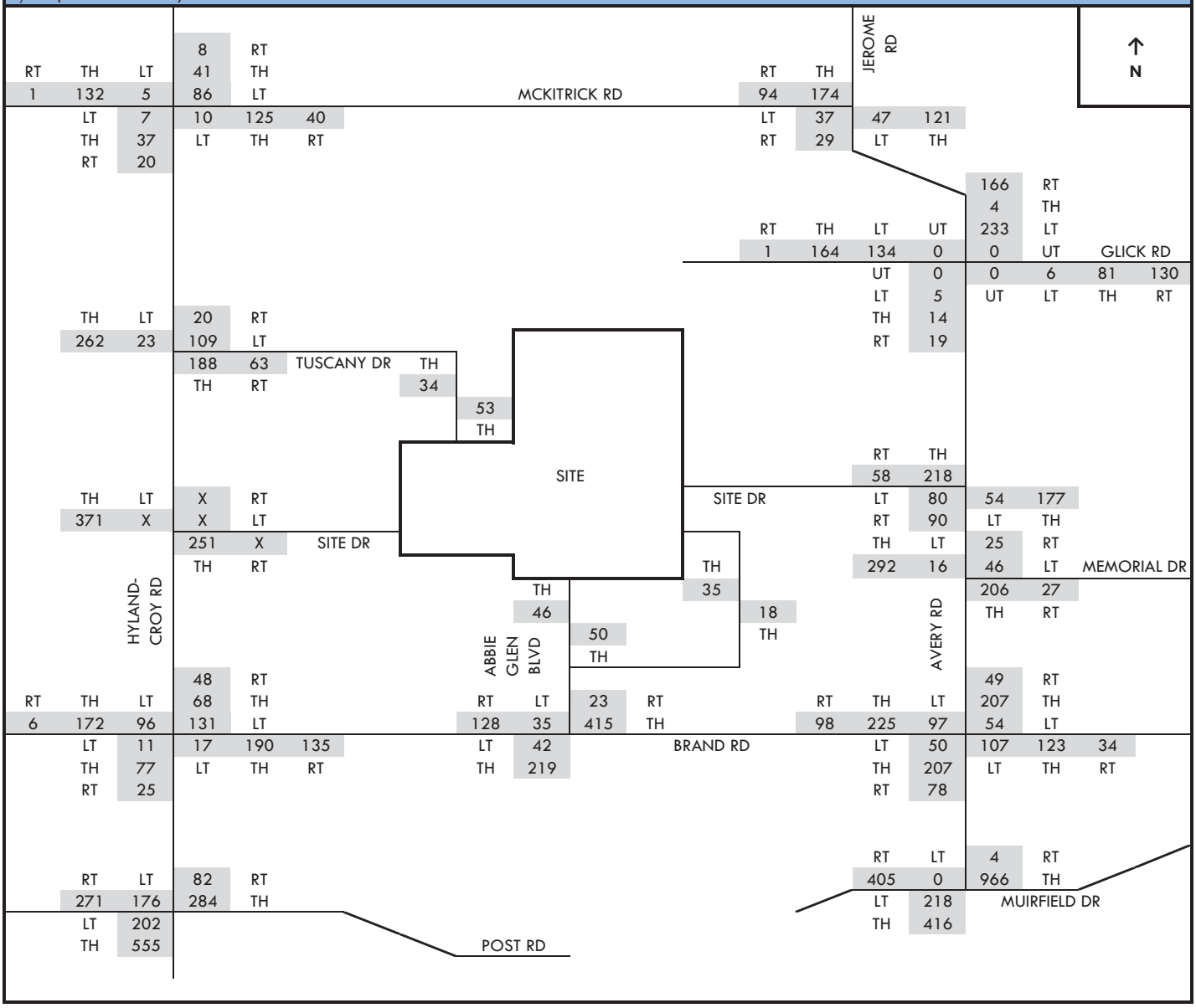

Riviera
Traffic Impact Study
Traffic Volume Calculations

2024 Full Build Traffic - w/o Hyland-Croy Site Drive — **AM Peak Hour**
(Existing Deer Run Trips Removed) — **V1=L-N**

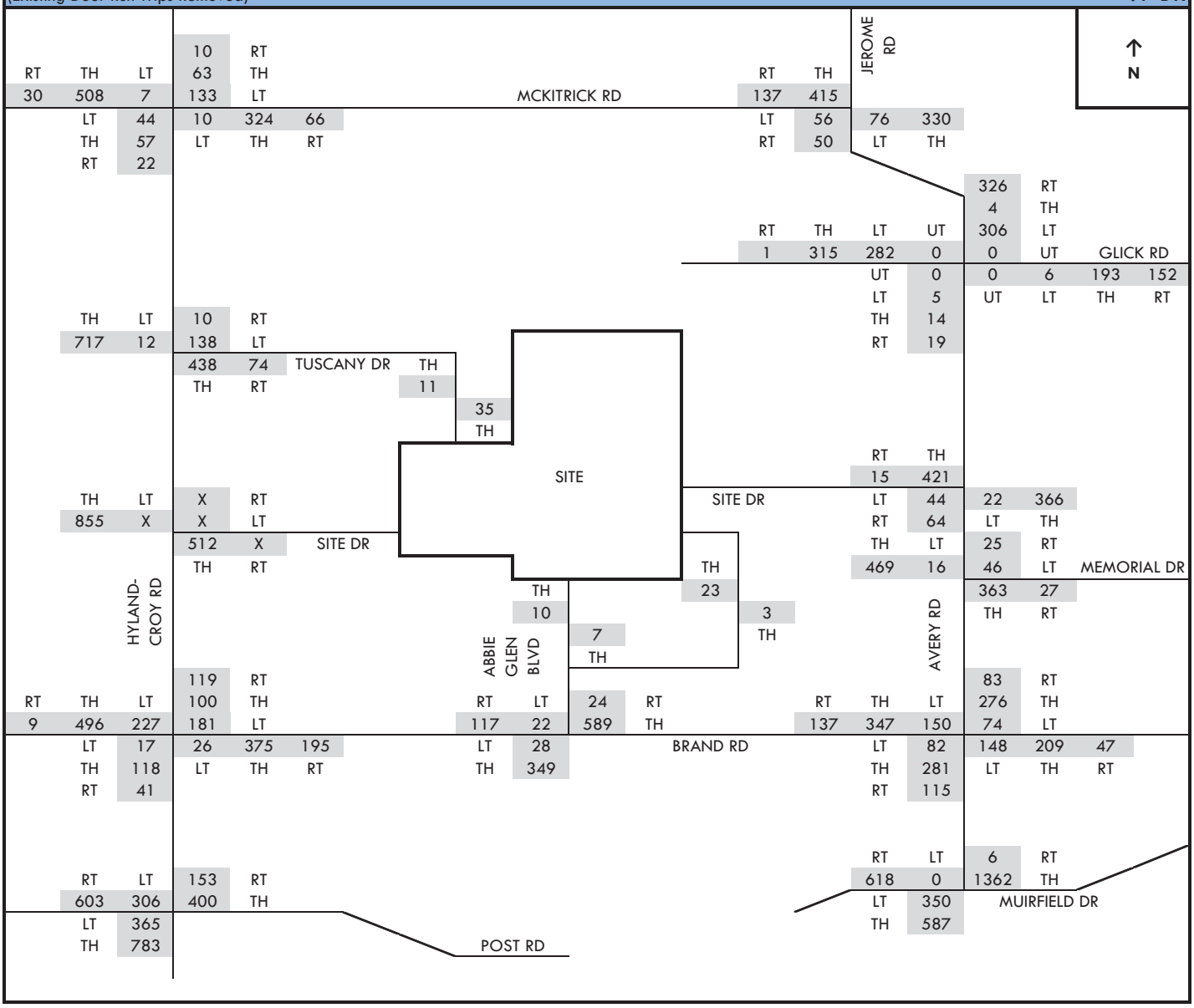

Riviera
Traffic Impact Study
Traffic Volume Calculations

2024 Full Build Traffic - w/o Hyland-Croy Site Drive — **AM Peak Hour**
w/ Proposed Elementary School — **V=V1+T**

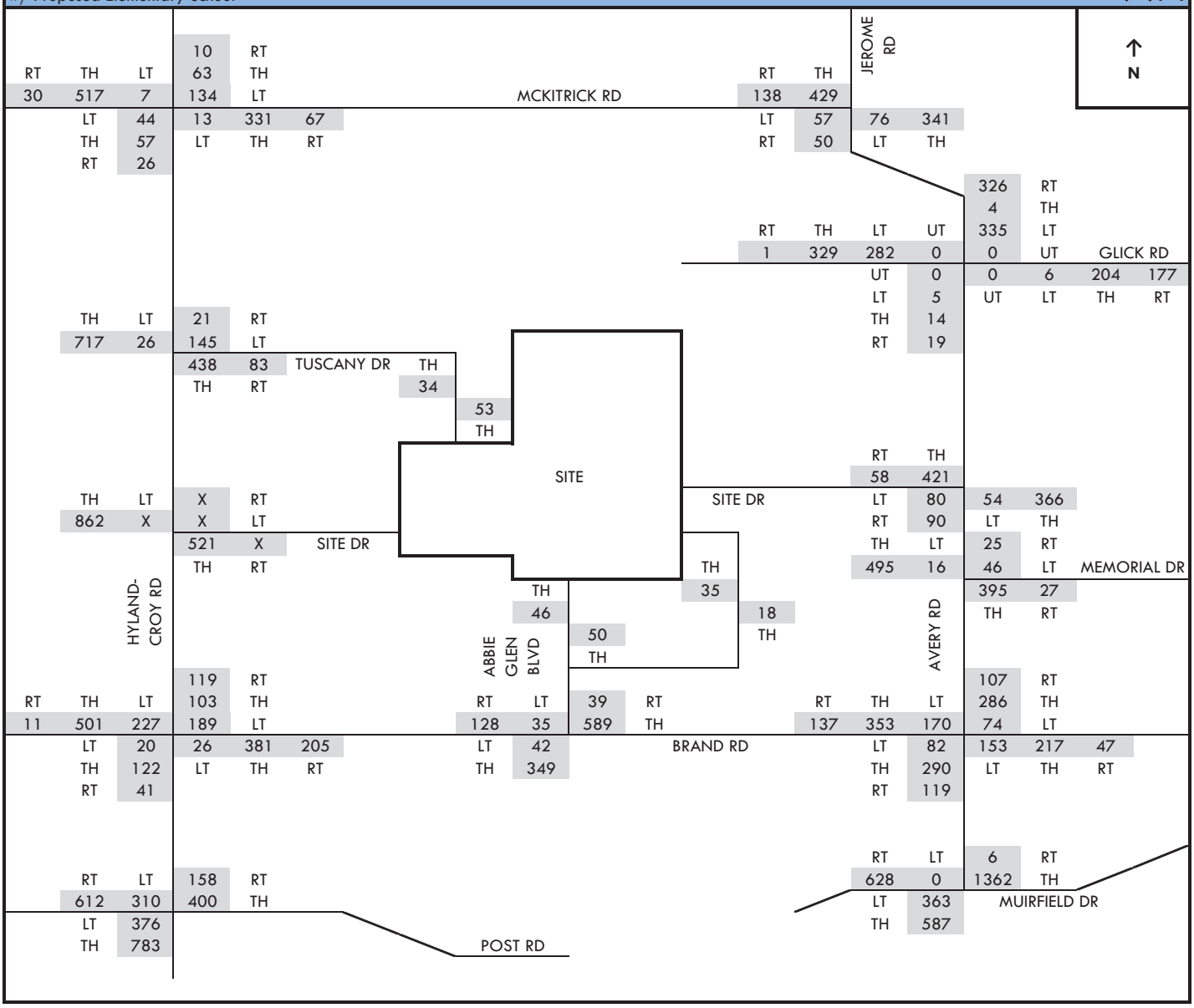

PM PEAK HOUR VOLUMES

Riviera
Traffic Impact Study
Traffic Volume Calculations

2014 Full Build Traffic - w/ Hyland-Croy Site Drive — **PM Peak Hour H1=B+G**

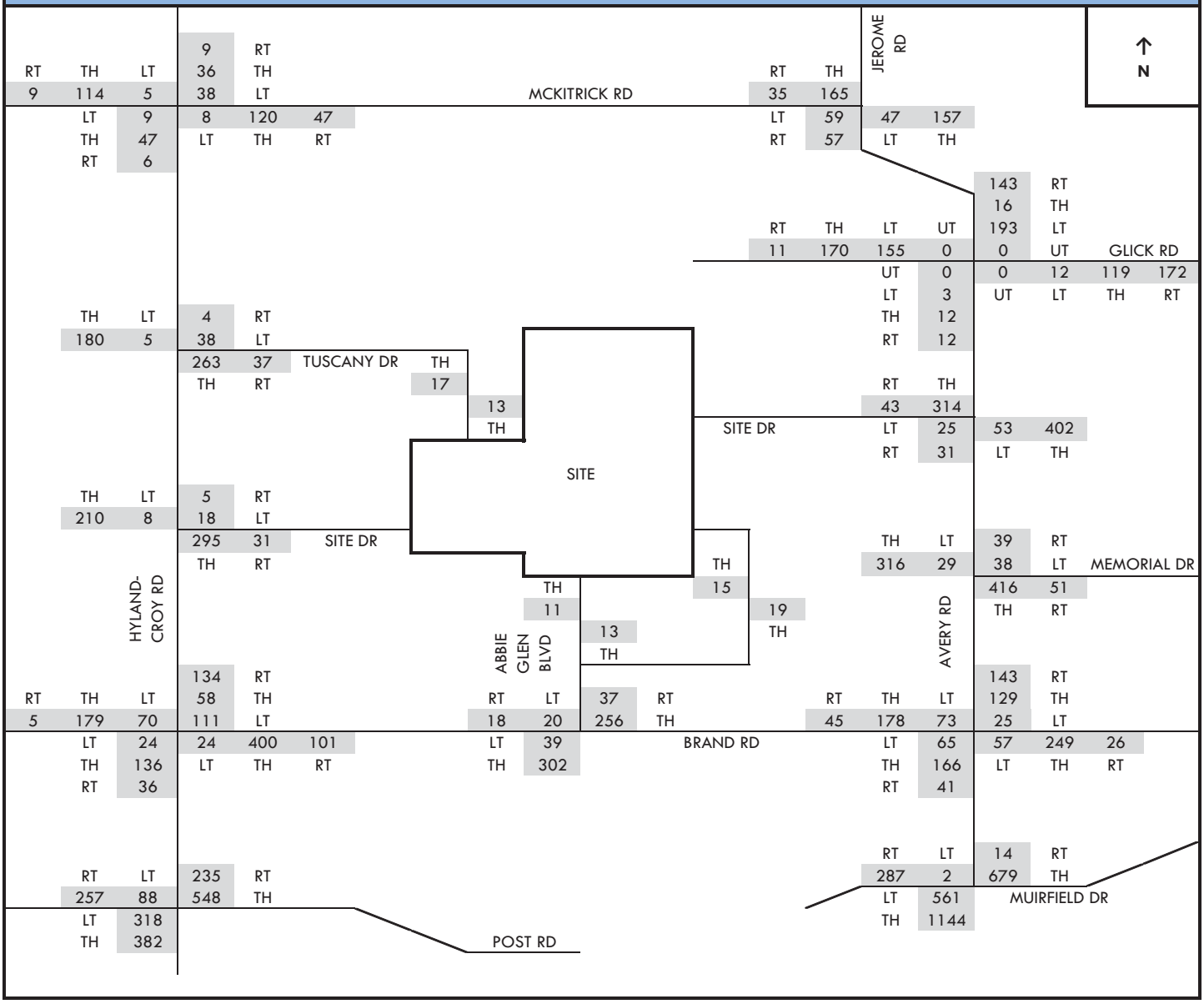

Riviera
Traffic Impact Study
Traffic Volume Calculations

2024 Full Build Traffic - w/ Hyland-Croy Site Drive — **PM Peak Hour H2=E+G**

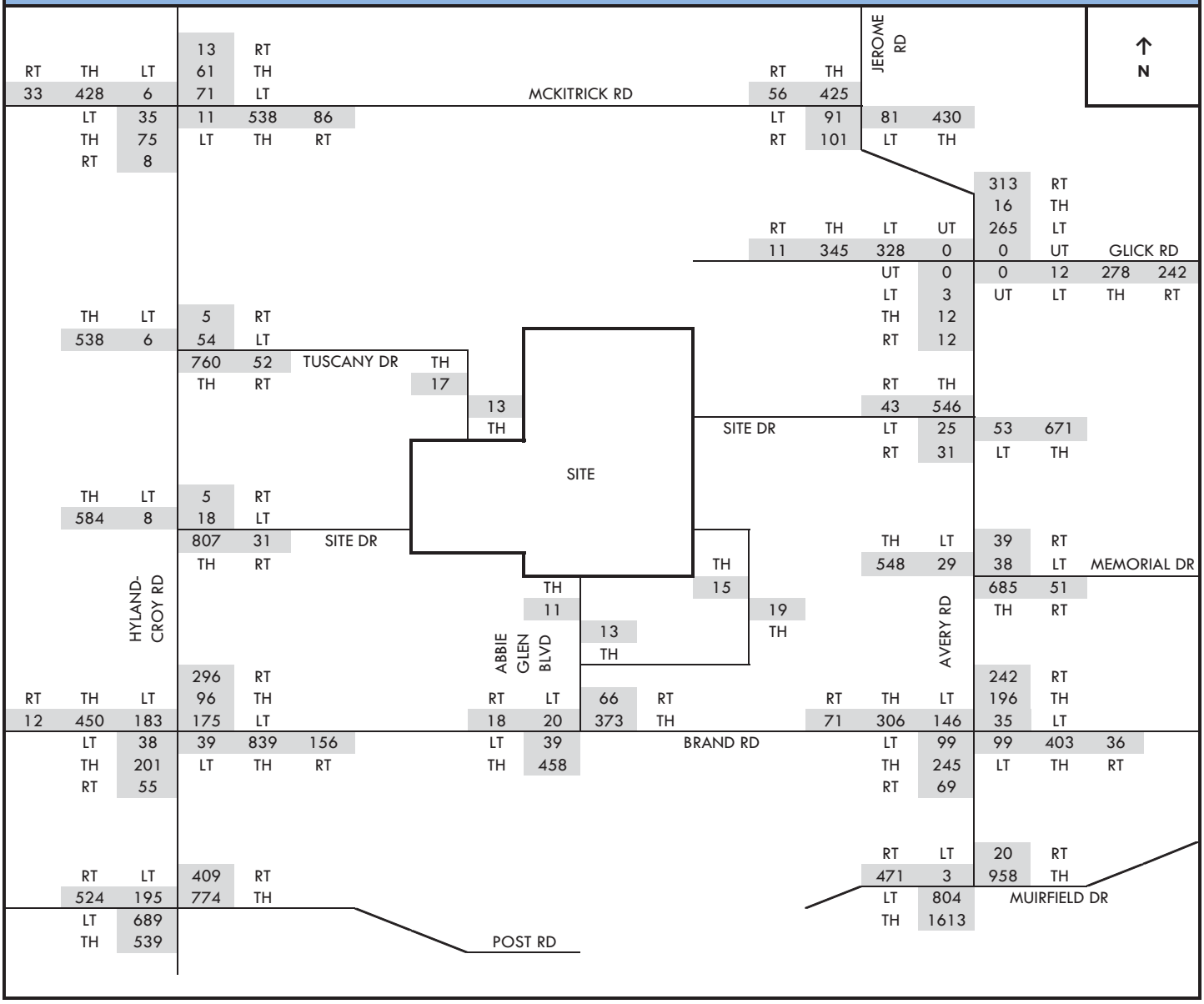

Riviera
Traffic Impact Study
Traffic Volume Calculations

2014 Full Build Traffic - w/o Hyland-Croy Site Drive — **PM Peak Hour K=B+J**

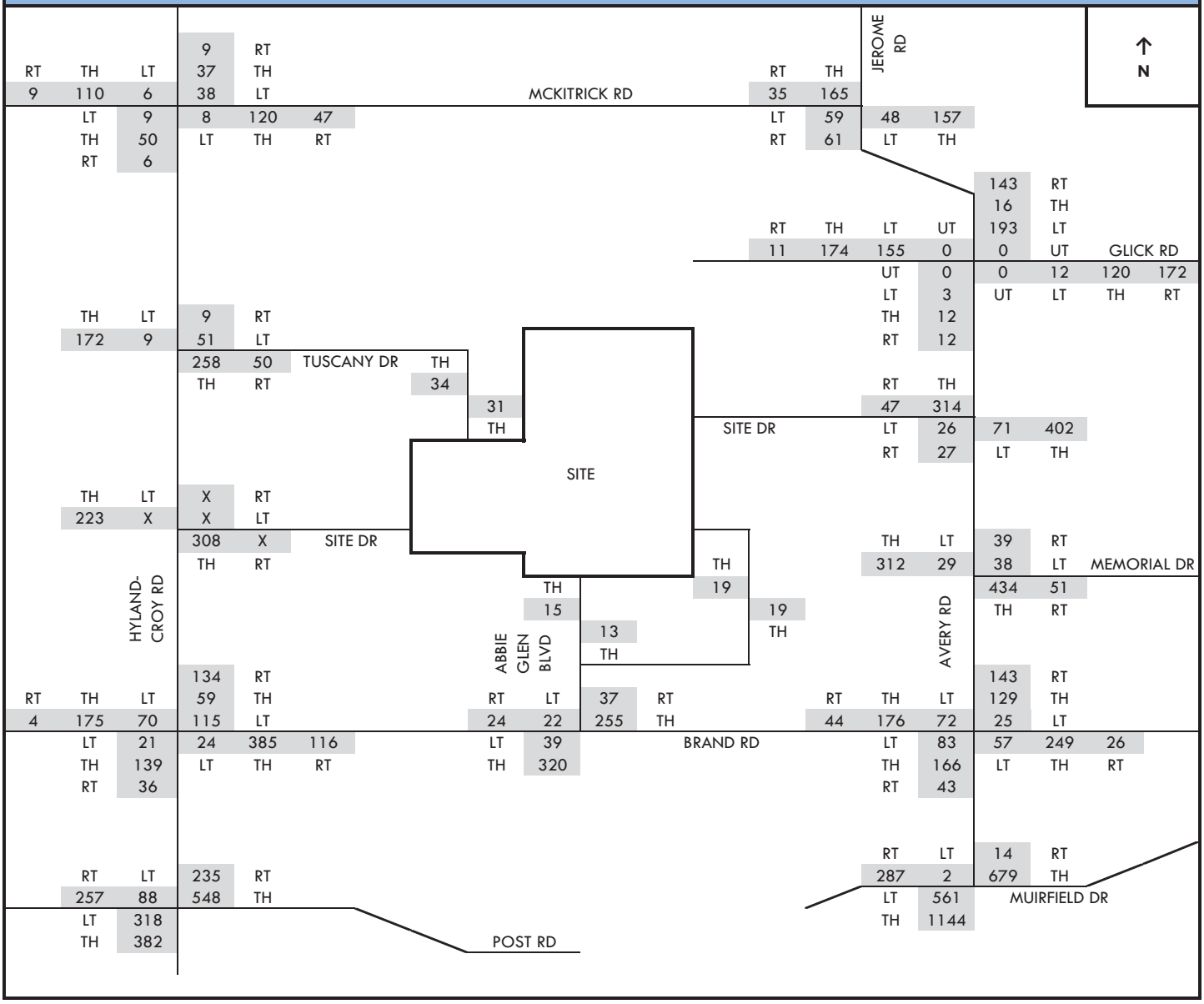

Riviera
Traffic Impact Study
Traffic Volume Calculations

2024 Full Build Traffic - w/o Hyland-Croy Site Drive — **PM Peak Hour L=E+J**

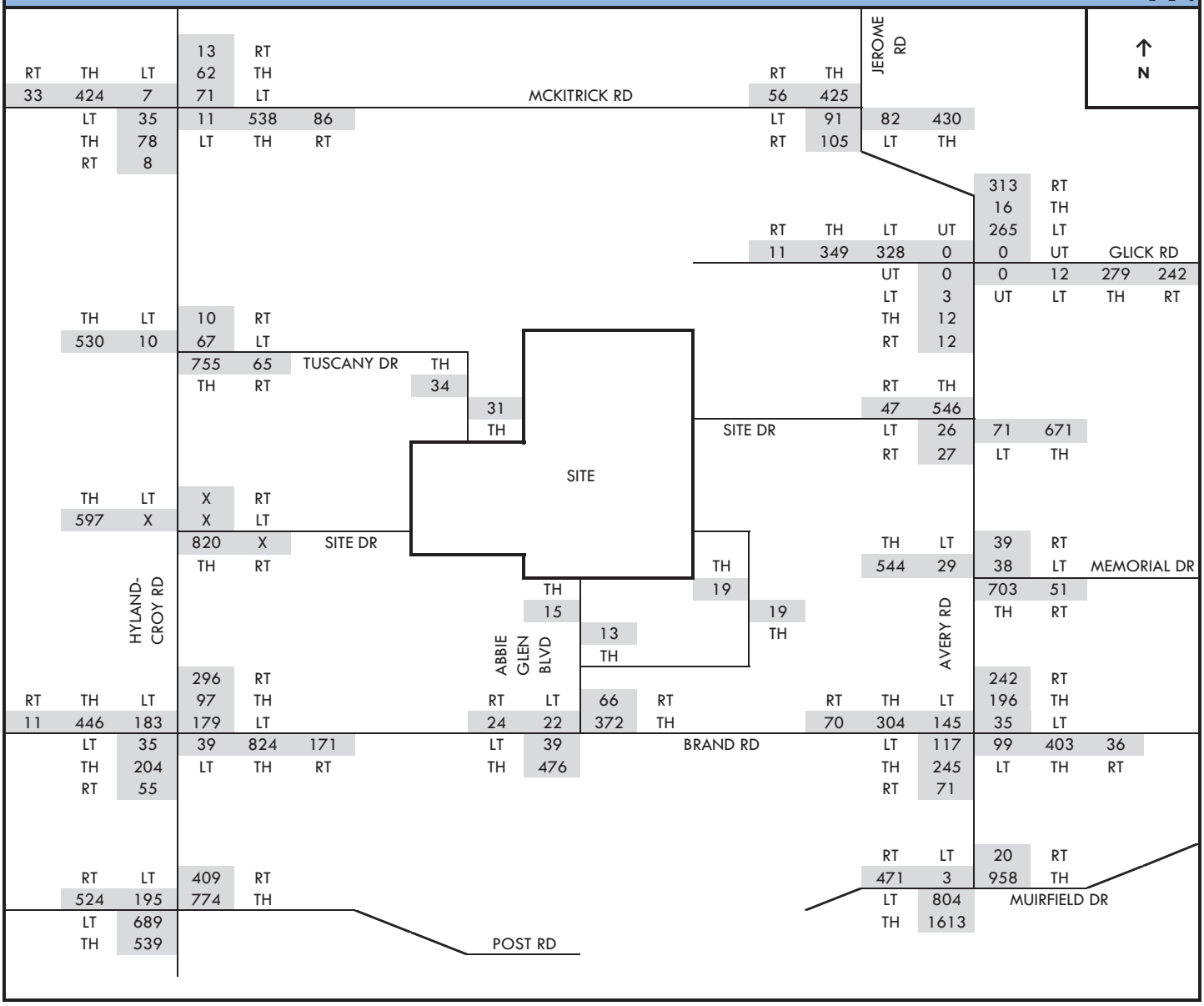

Riviera
Traffic Impact Study
Traffic Volume Calculations

Existing Deer Run Elementary Trip Distribution - w/ Hyland-Croy Site Drive **PM Peak Hour**
INBOUND **M1**

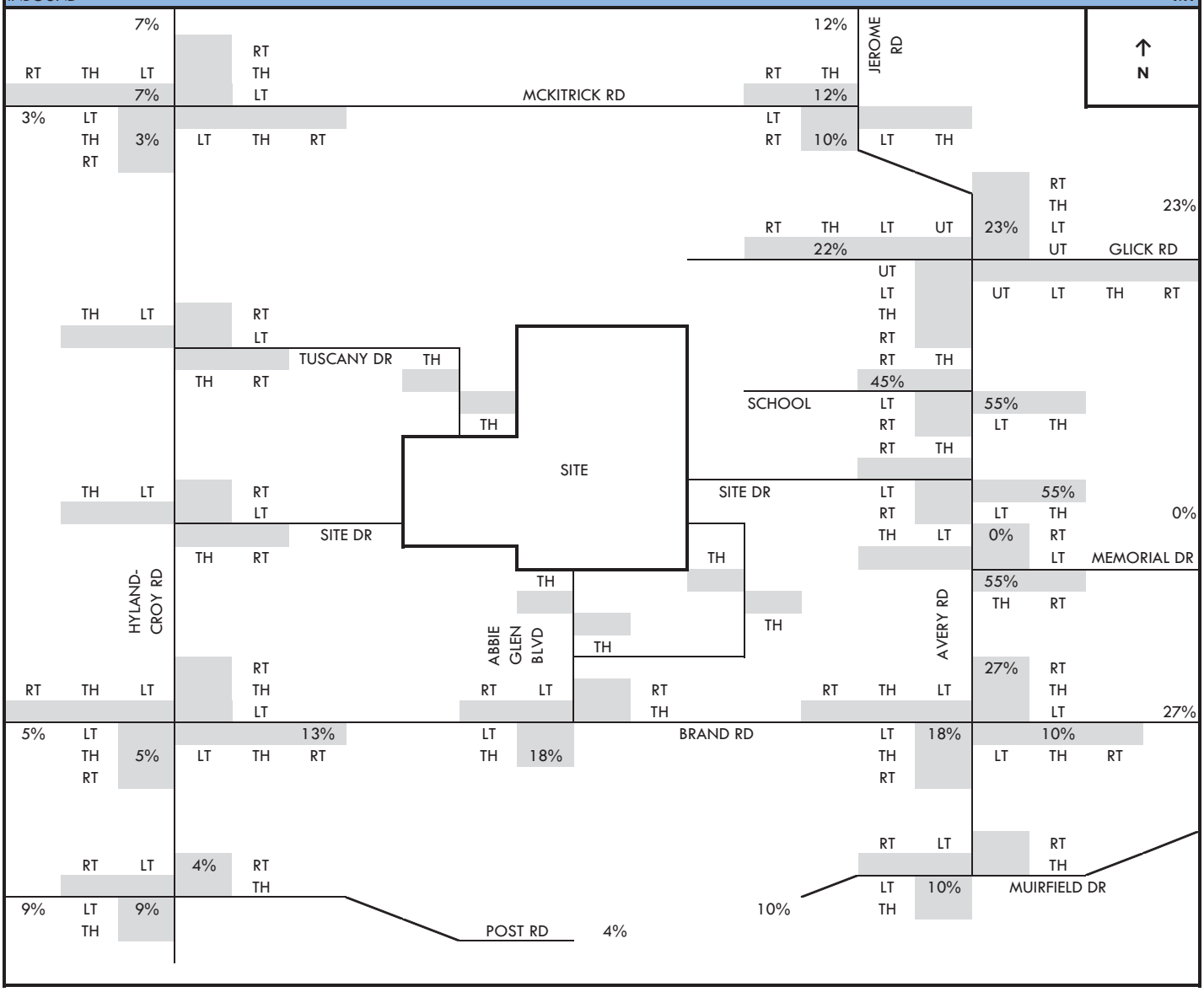

Riviera
Traffic Impact Study
Traffic Volume Calculations

Existing Deer Run Elementary Trip Distribution - w/ Hyland-Croy Site Drive **PM Peak Hour**
OUTBOUND **M2**

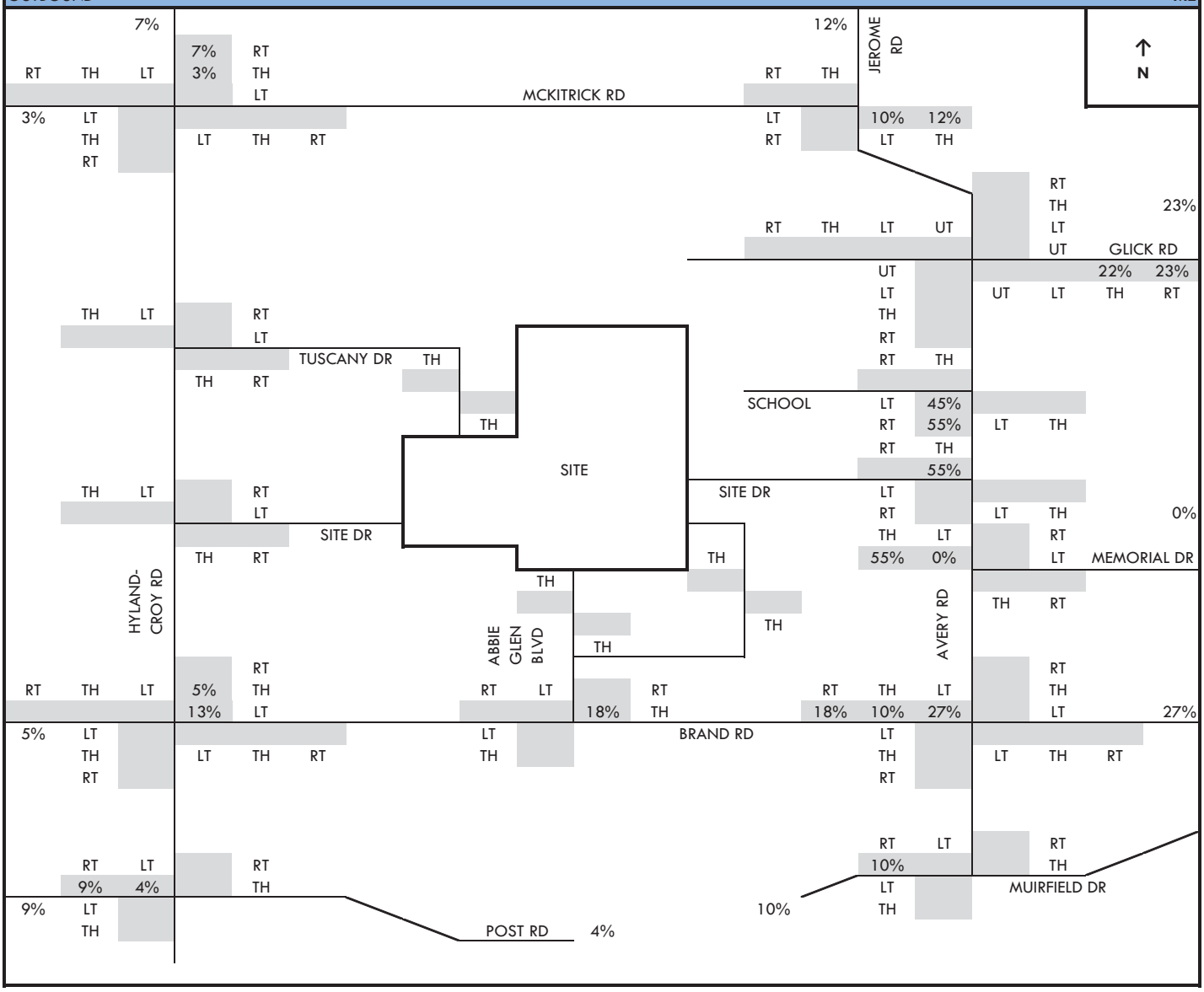

Riviera
Traffic Impact Study
Traffic Volume Calculations

Existing Deer Run Elementary Trip Assignment - w/ Hyland-Croy Site Drive **PM Peak Hour**
INBOUND **N1**

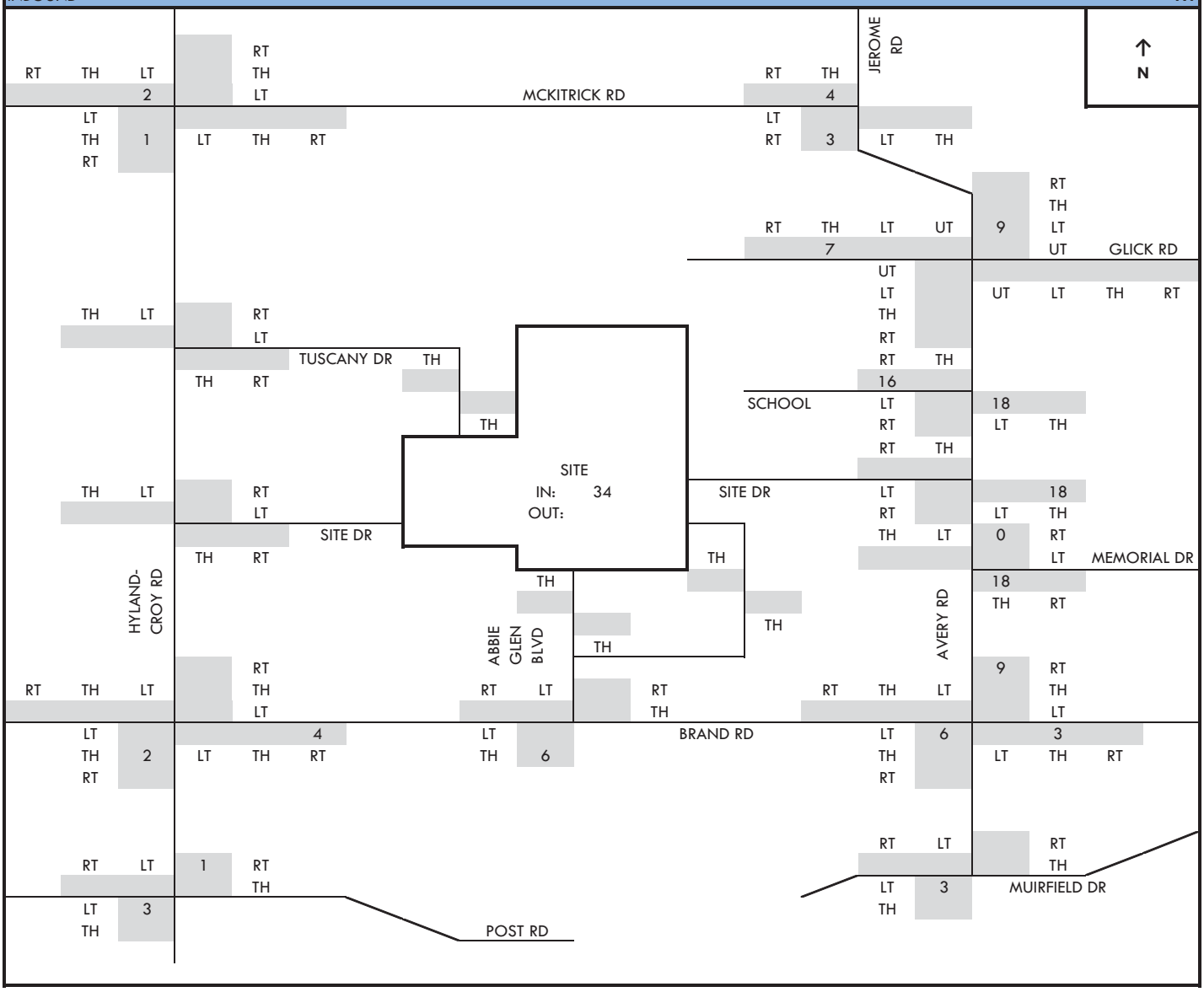

Riviera
Traffic Impact Study
Traffic Volume Calculations

Existing Deer Run Elementary Trip Assignment - w/ Hyland-Croy Site Drive **PM Peak Hour**
OUTBOUND **N2**

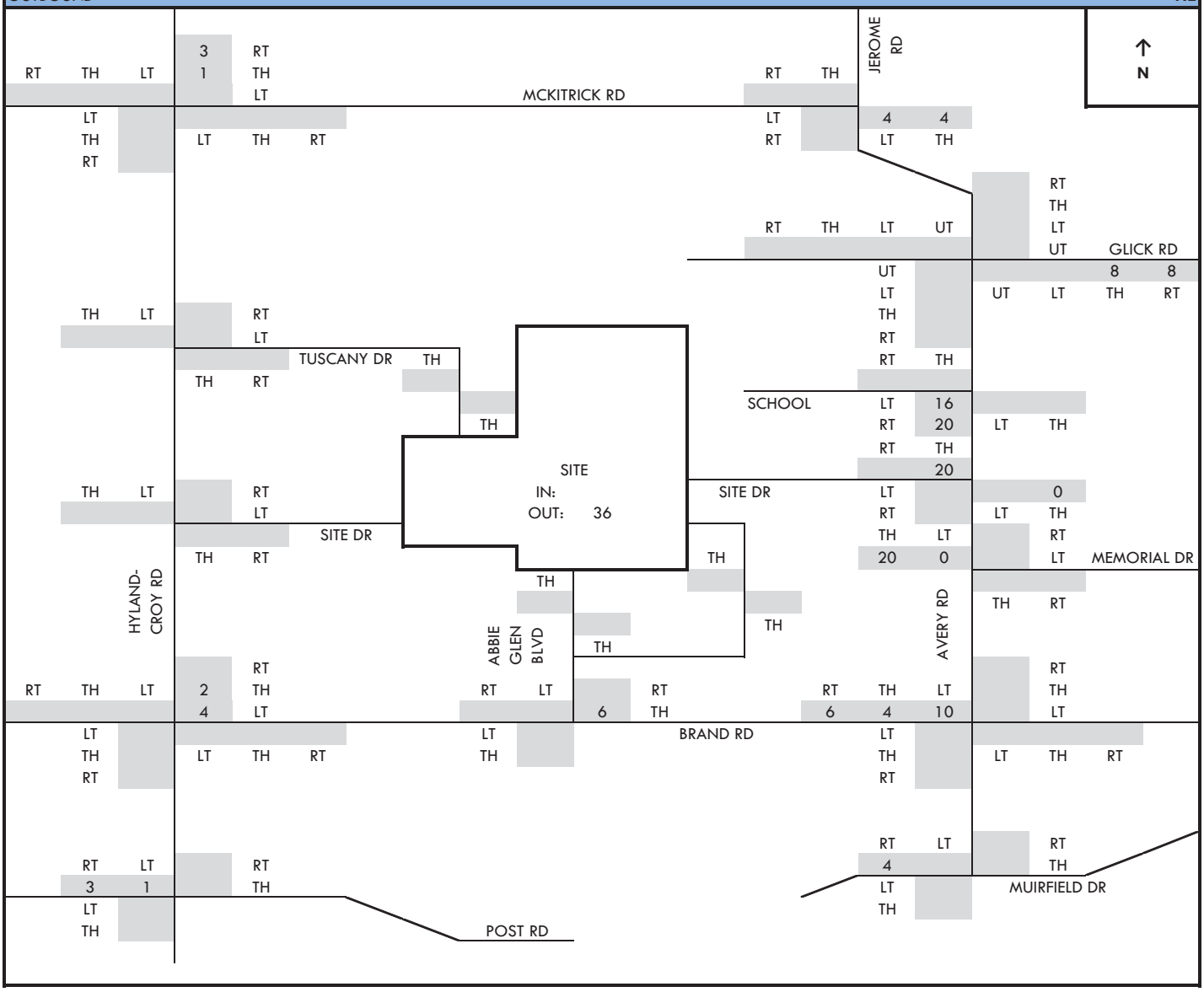

Riviera
Traffic Impact Study
Traffic Volume Calculations

Existing Deer Run Elementary Trips - w/ Hyland-Croy Site Drive — **PM Peak Hour N=N1+N2**

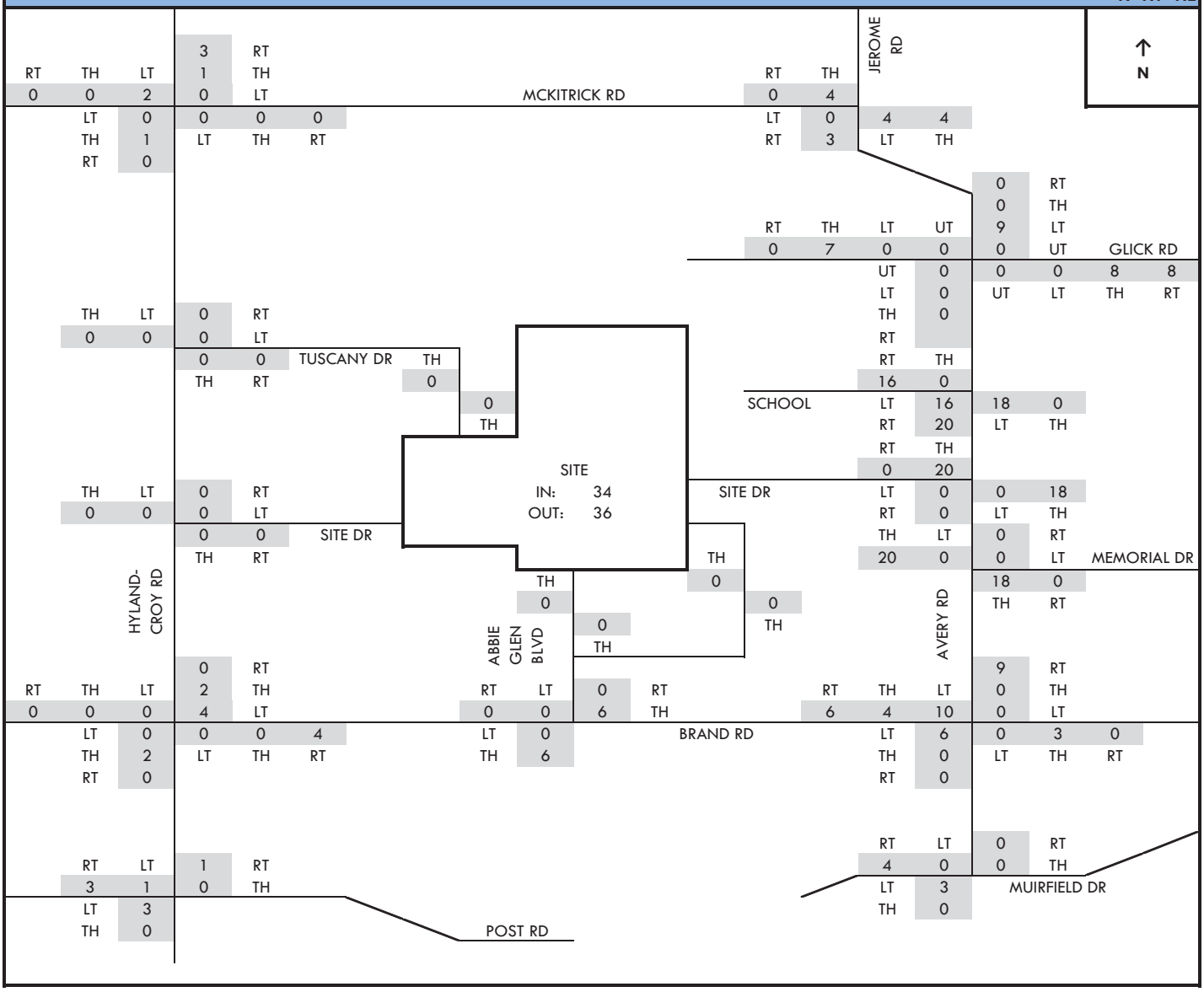

Riviera
Traffic Impact Study
Traffic Volume Calculations

Proposed Elementary School Global Trip Distribution - w/ Hyland-Croy Site Drive **PM Peak Hour**
INBOUND **O1**

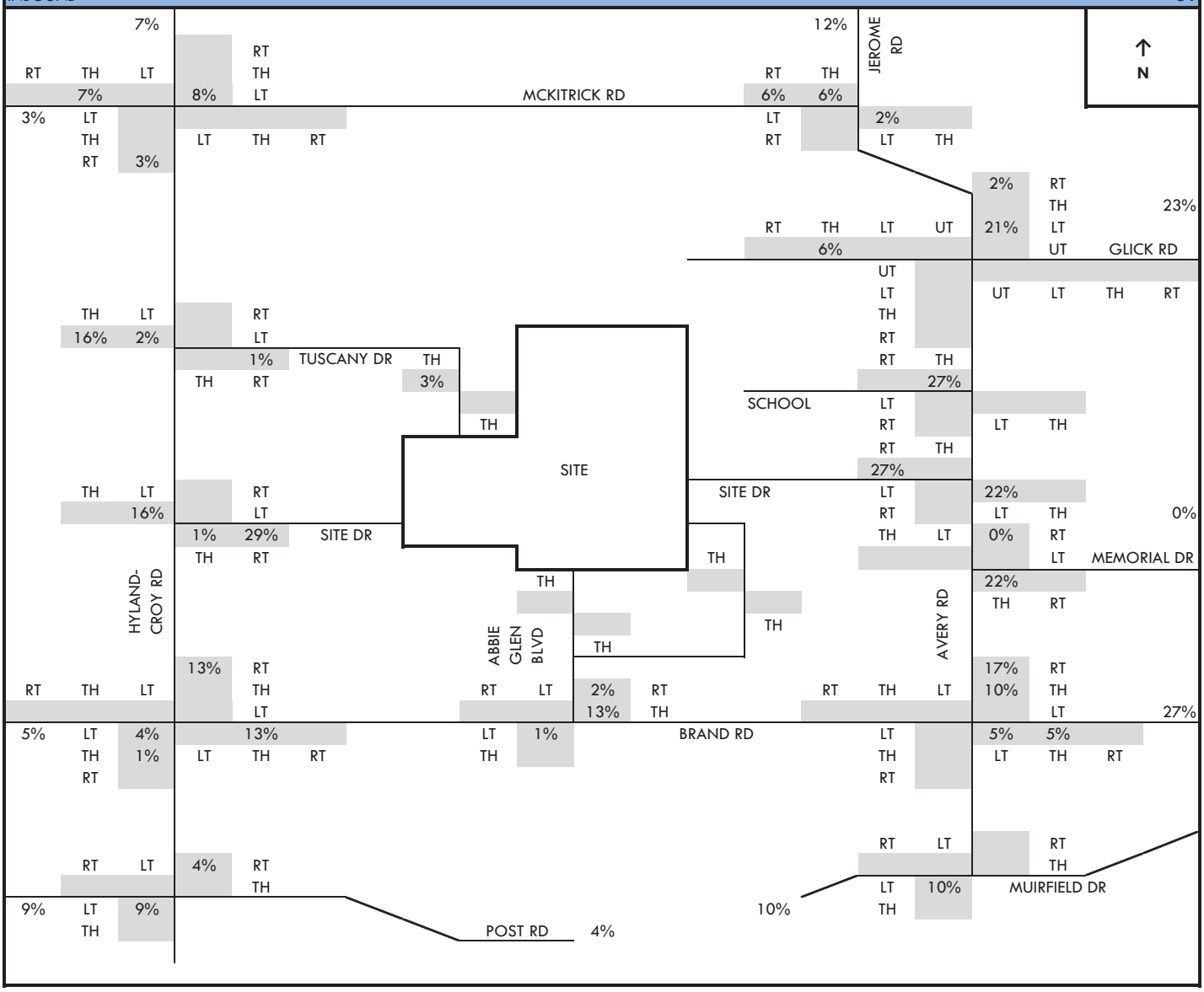

Traffic Volume Calculations

Proposed Elementary School Global Trip Distribution - w/ Hyland-Croy Site Drive **PM Peak Hour**

OUTBOUND **O2**

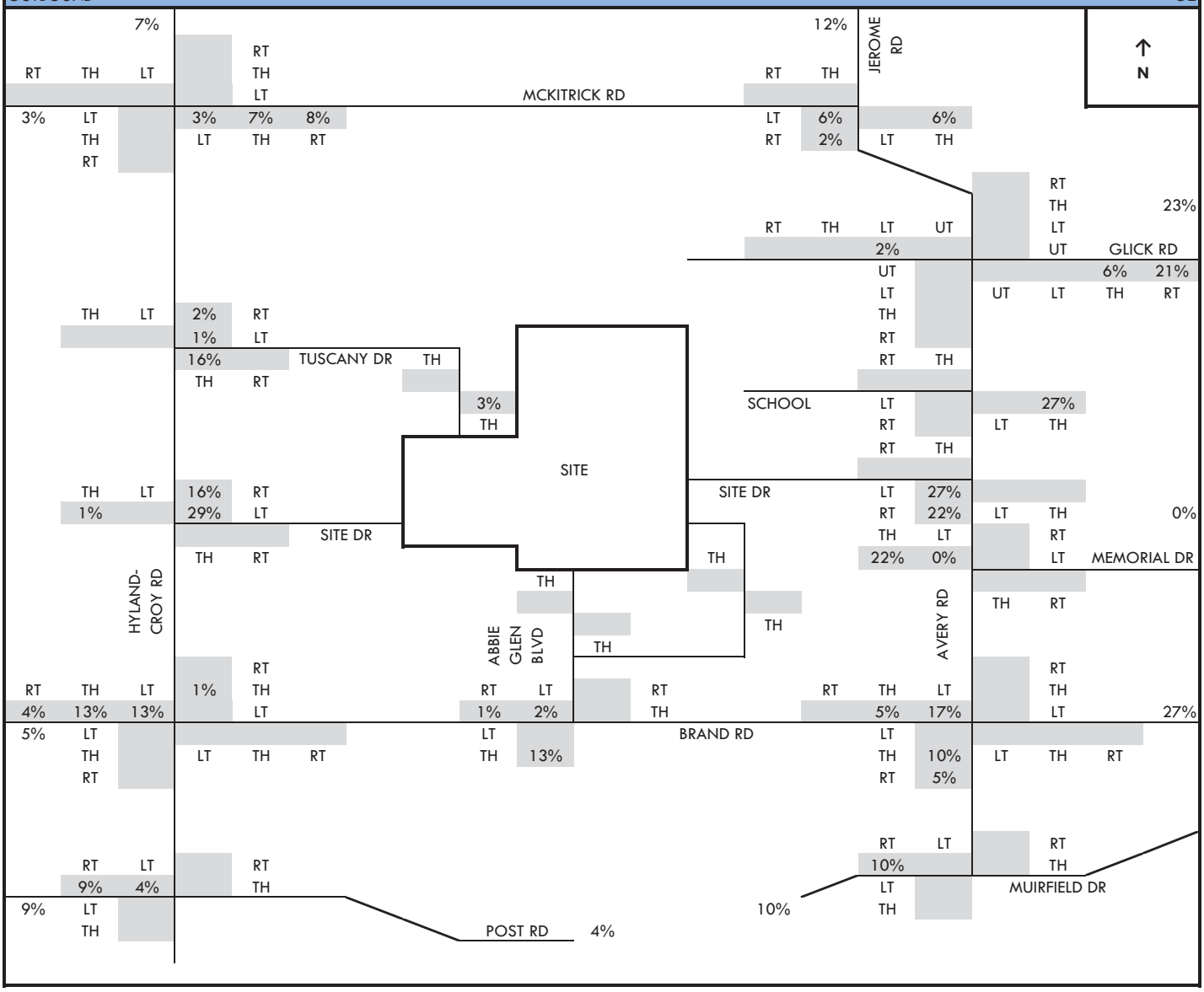

Riviera
Traffic Impact Study
Traffic Volume Calculations

Proposed Elementary School Trip Assignment - w/ Hyland-Croy Site Drive **PM Peak Hour**
INBOUND (INTERNAL TRIPS REMOVED) **P1**

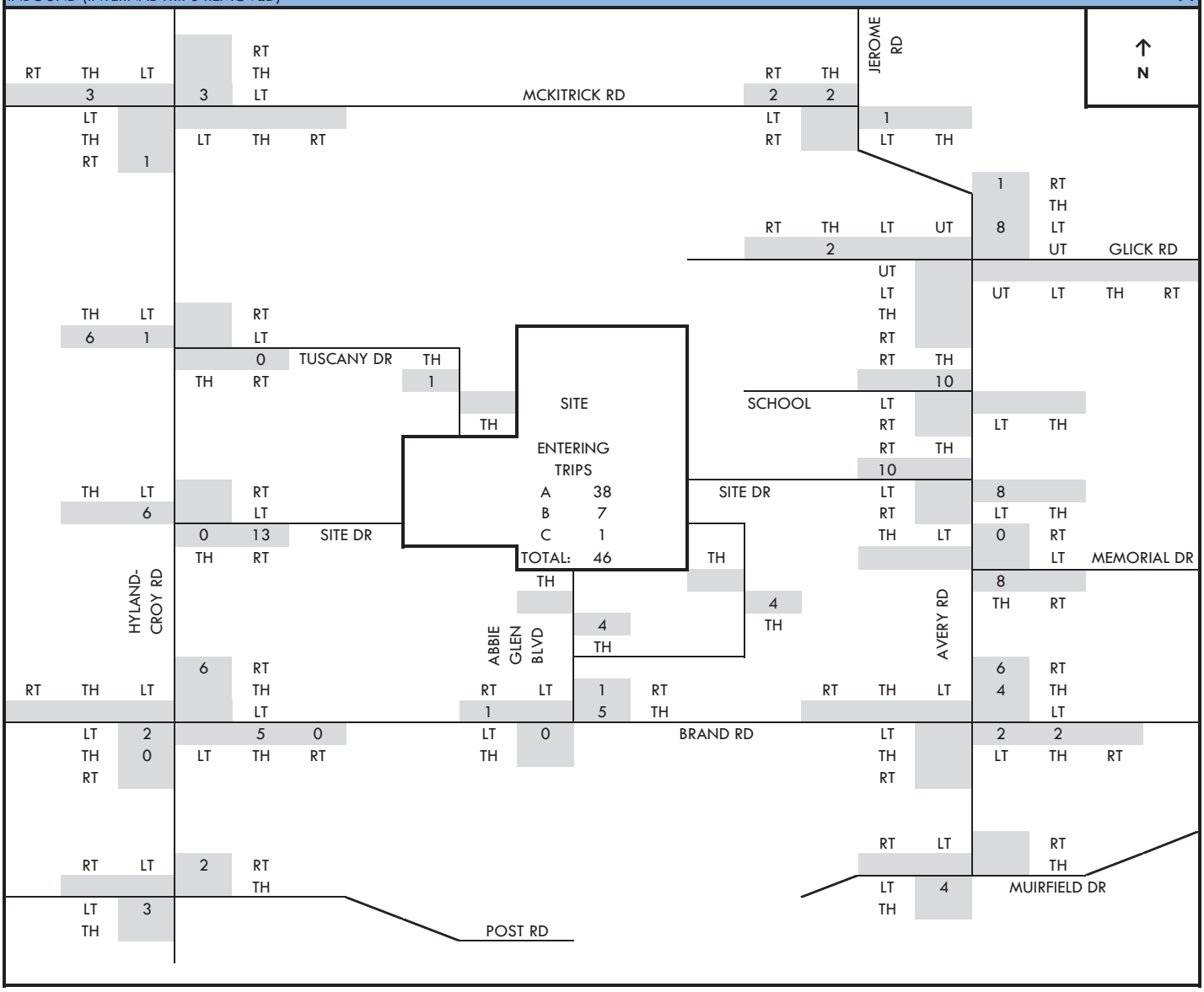

Riviera
Traffic Impact Study
Traffic Volume Calculations

Proposed Elementary School Trip Assignment - w/ Hyland-Croy Site Drive **PM Peak Hour**
OUTBOUND (INTERNAL TRIPS REMOVED) **P2**

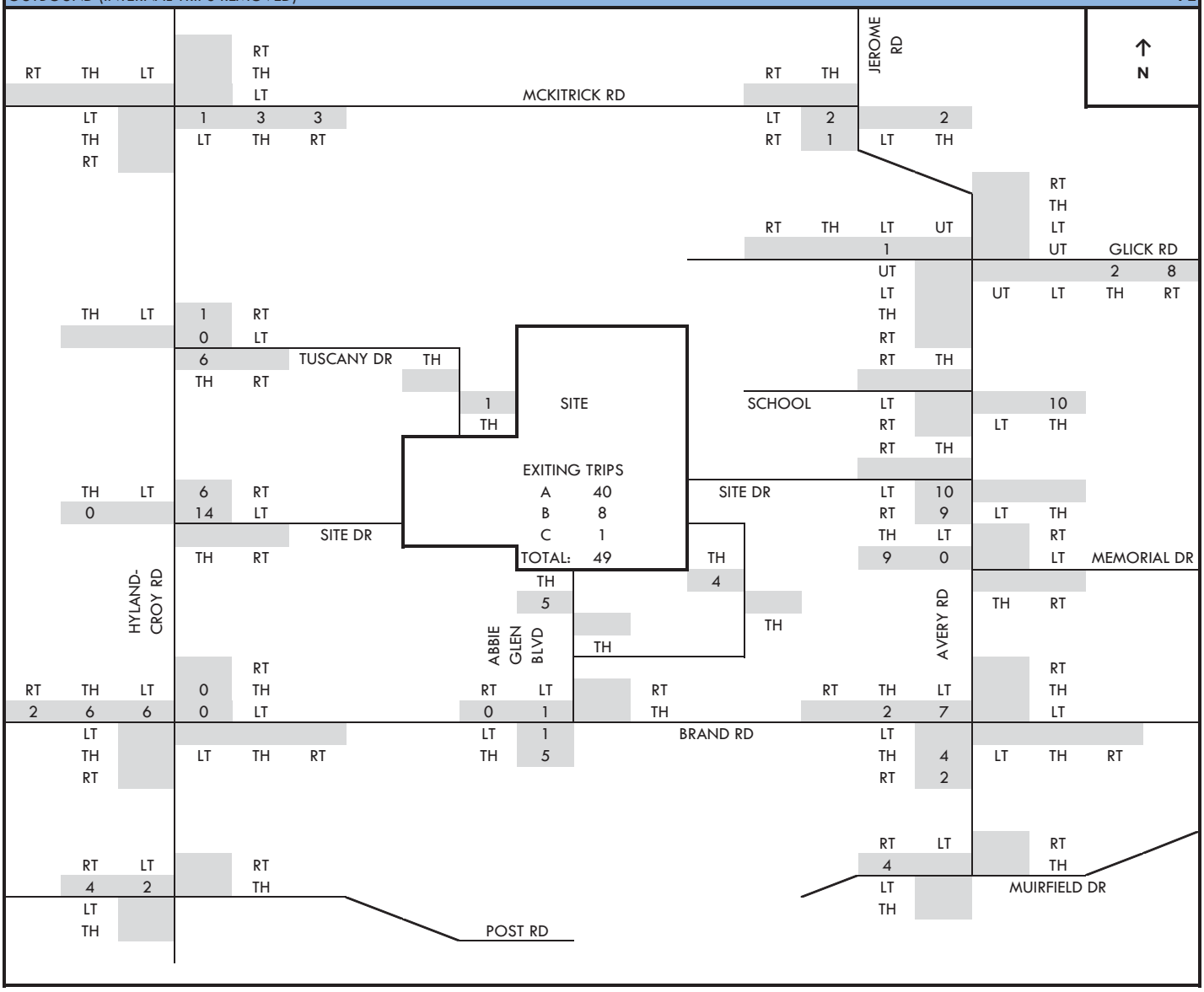

Riviera
Traffic Impact Study
Traffic Volume Calculations

Proposed Elementary School Trips - w/ Hyland-Croy Site Drive — **PM Peak Hour P=P1+P2**

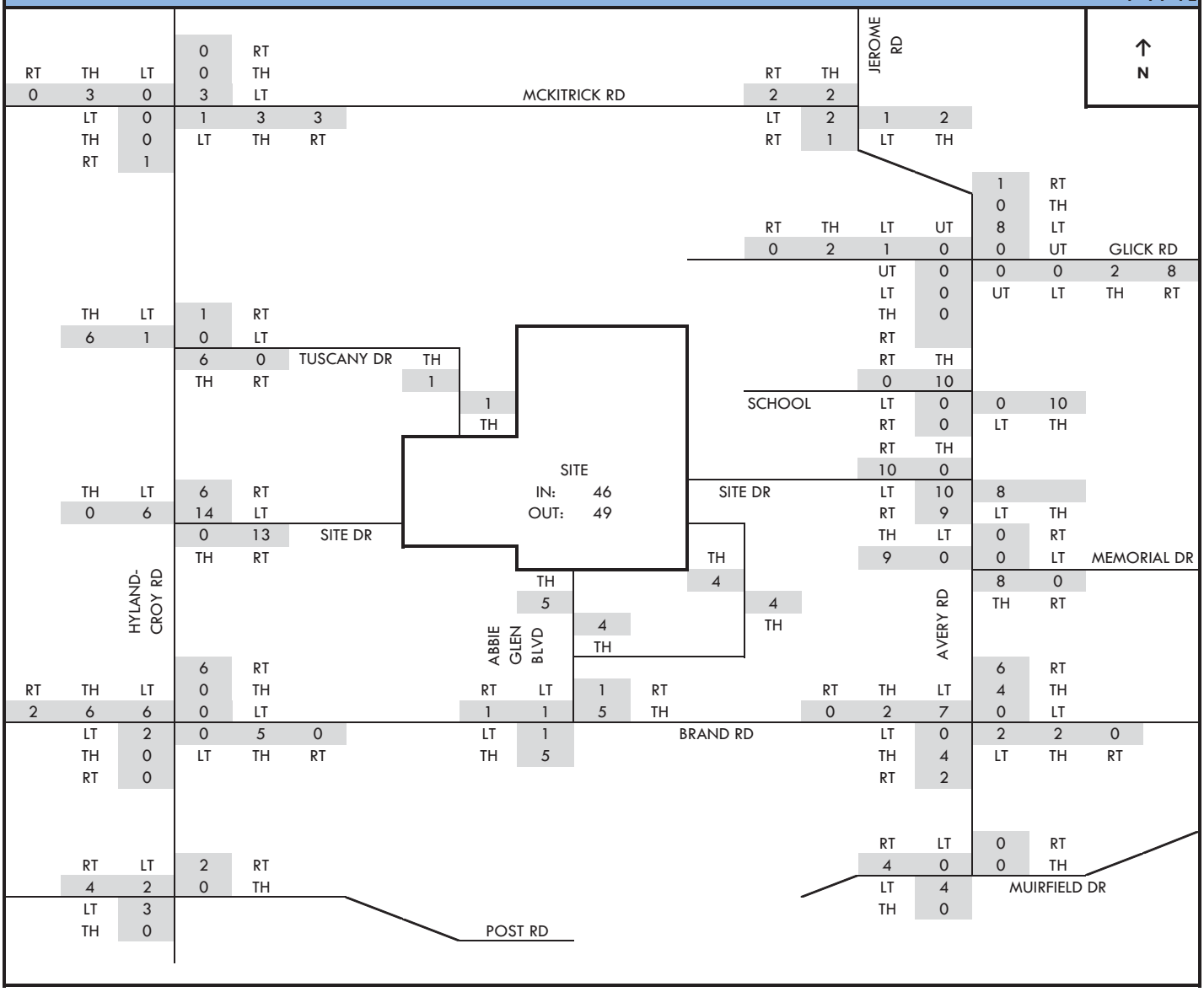

Riviera
Traffic Impact Study
Traffic Volume Calculations

Adjusted School Trips w/ Hyland-Croy Site Dr. — **PM Peak Hour Q1=P-N**

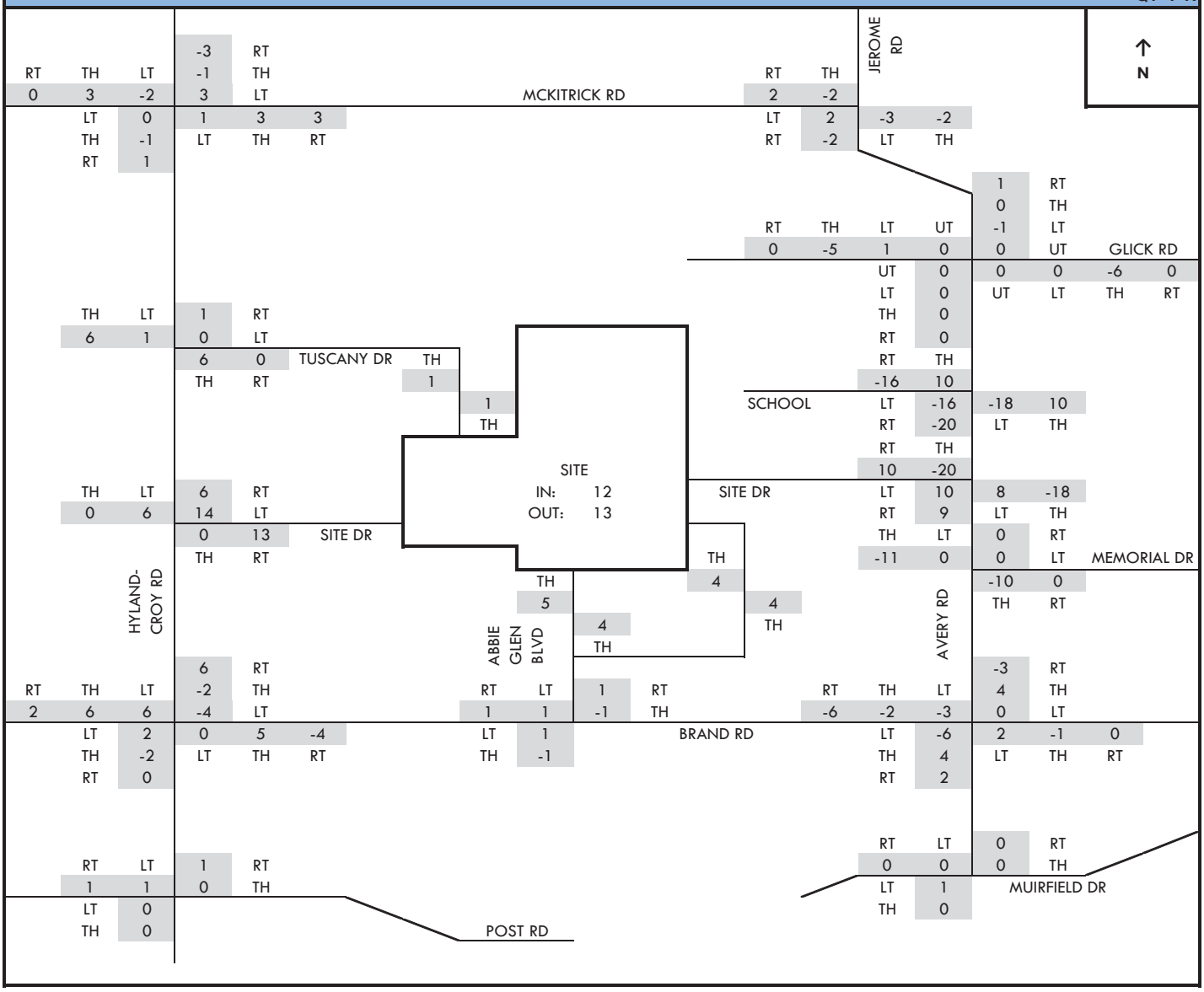

Riviera
Traffic Impact Study
Traffic Volume Calculations

2014 Full Build Traffic - w/ Hyland-Croy Site Drive **PM Peak Hour**
(Existing Deer Run Trips Removed) **Q2=H1-N**

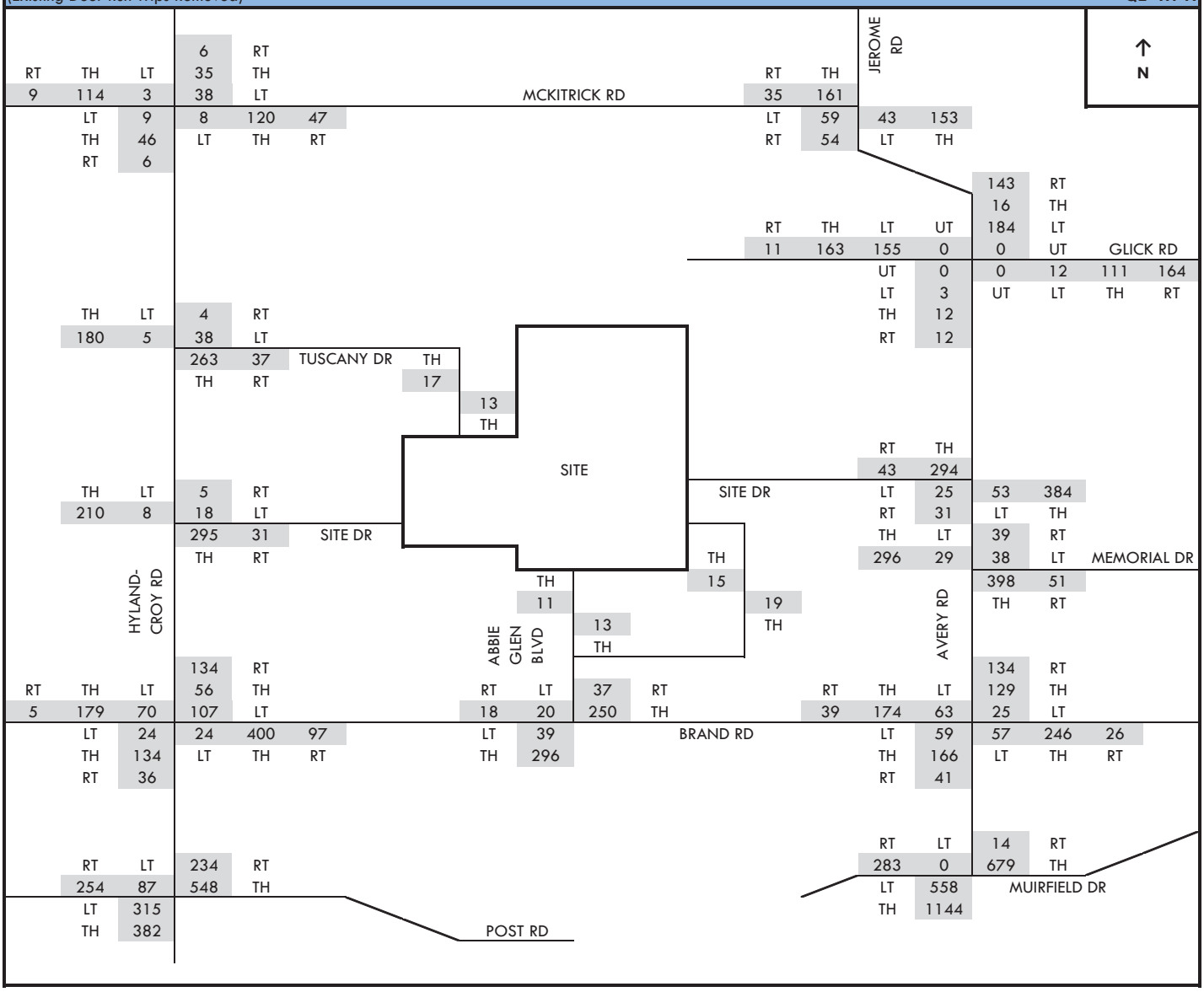

Riviera
Traffic Impact Study
Traffic Volume Calculations

2014 Full Build Traffic - w/ Hyland-Croy Site Drive — **PM Peak Hour**
w/ Proposed Elementary School — **Q=Q2+P**

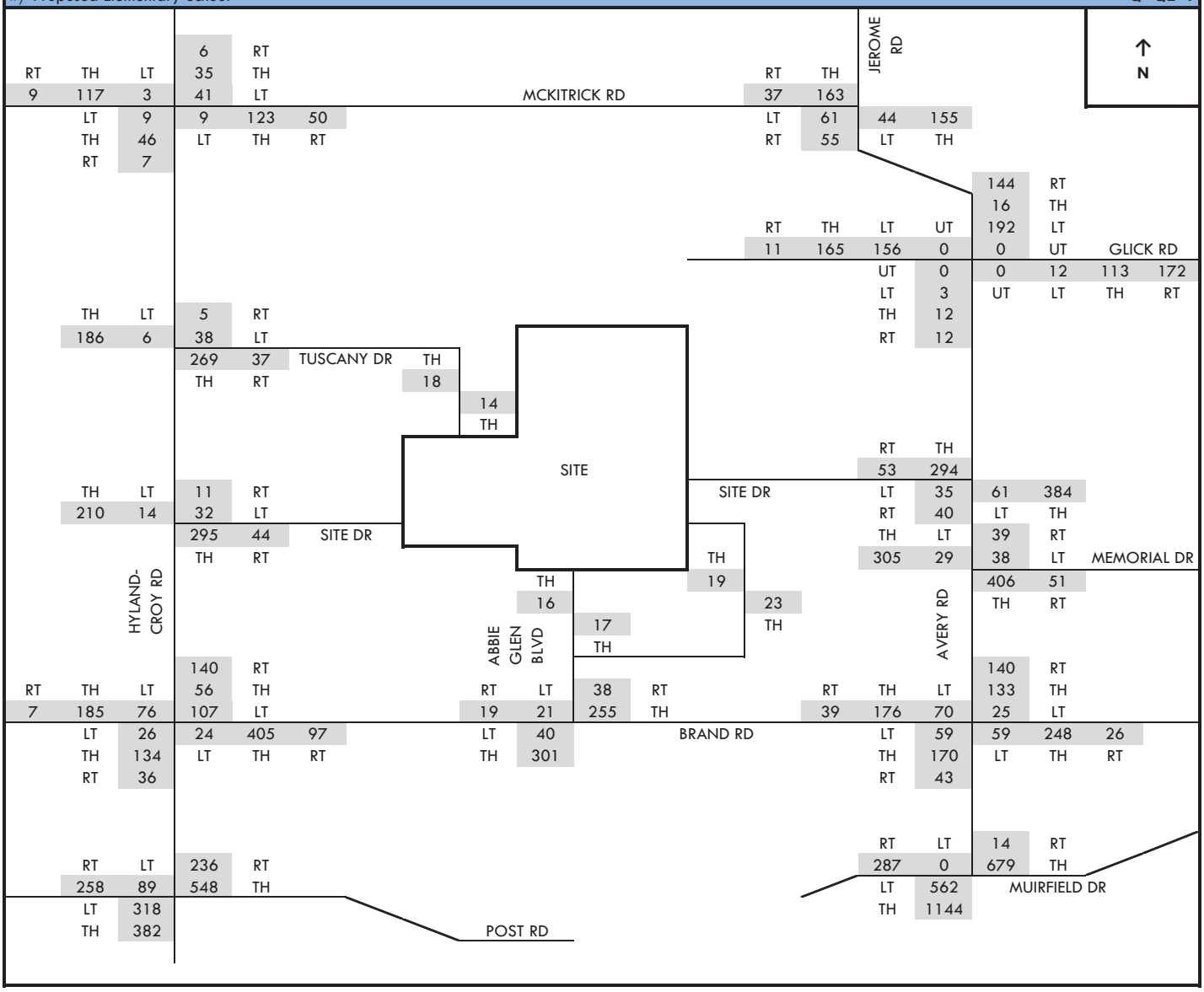

Riviera
Traffic Impact Study
Traffic Volume Calculations

2024 Full Build Traffic - w/ Hyland-Croy Site Drive **PM Peak Hour**
(Existing Deer Run Trips Removed) **R1=H1-N**

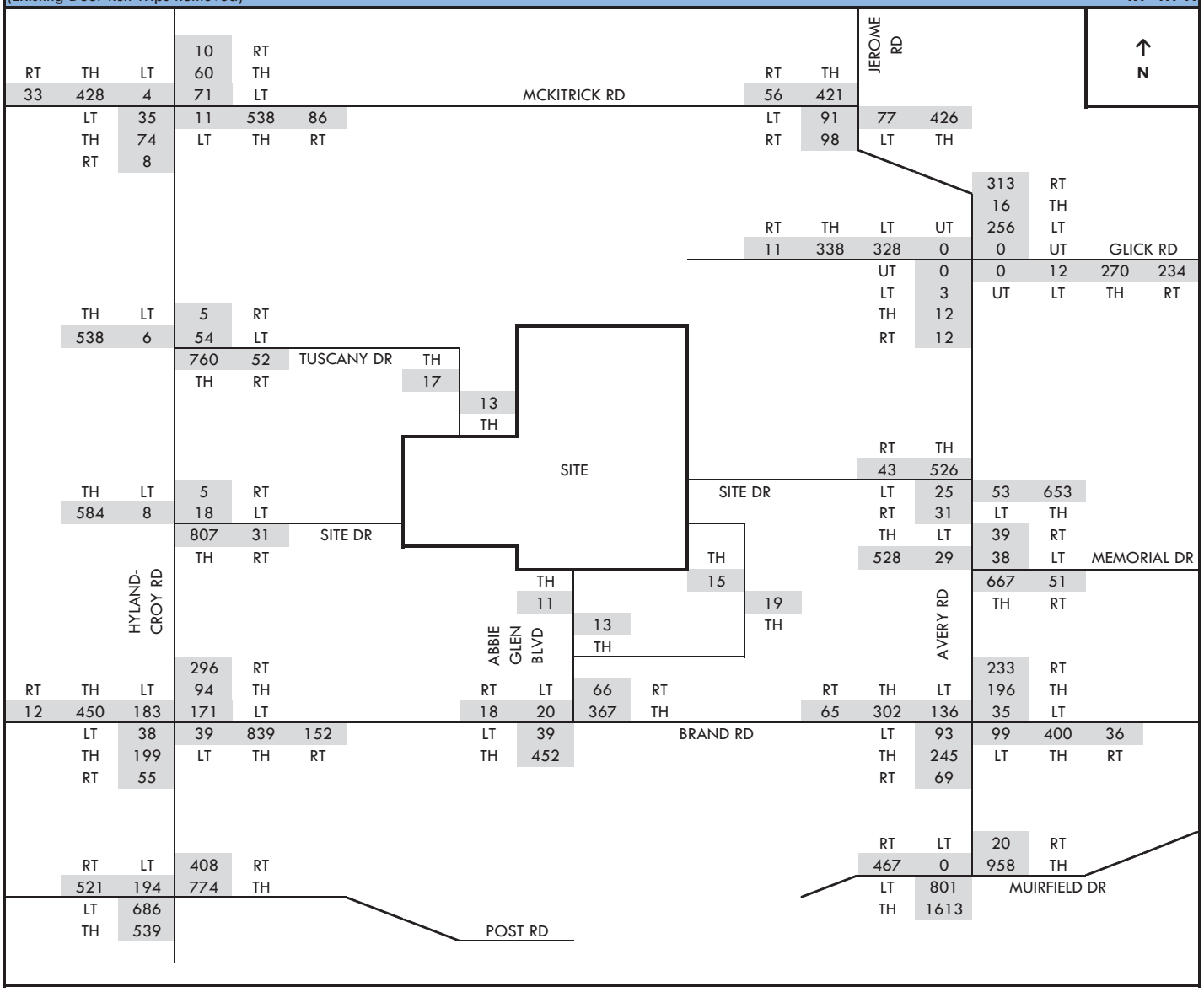

Riviera
Traffic Impact Study
Traffic Volume Calculations

2024 Full Build Traffic - w/ Hyland-Croy Site Drive — **PM Peak Hour**
w/ Proposed Elementary School — **R=R1+P**

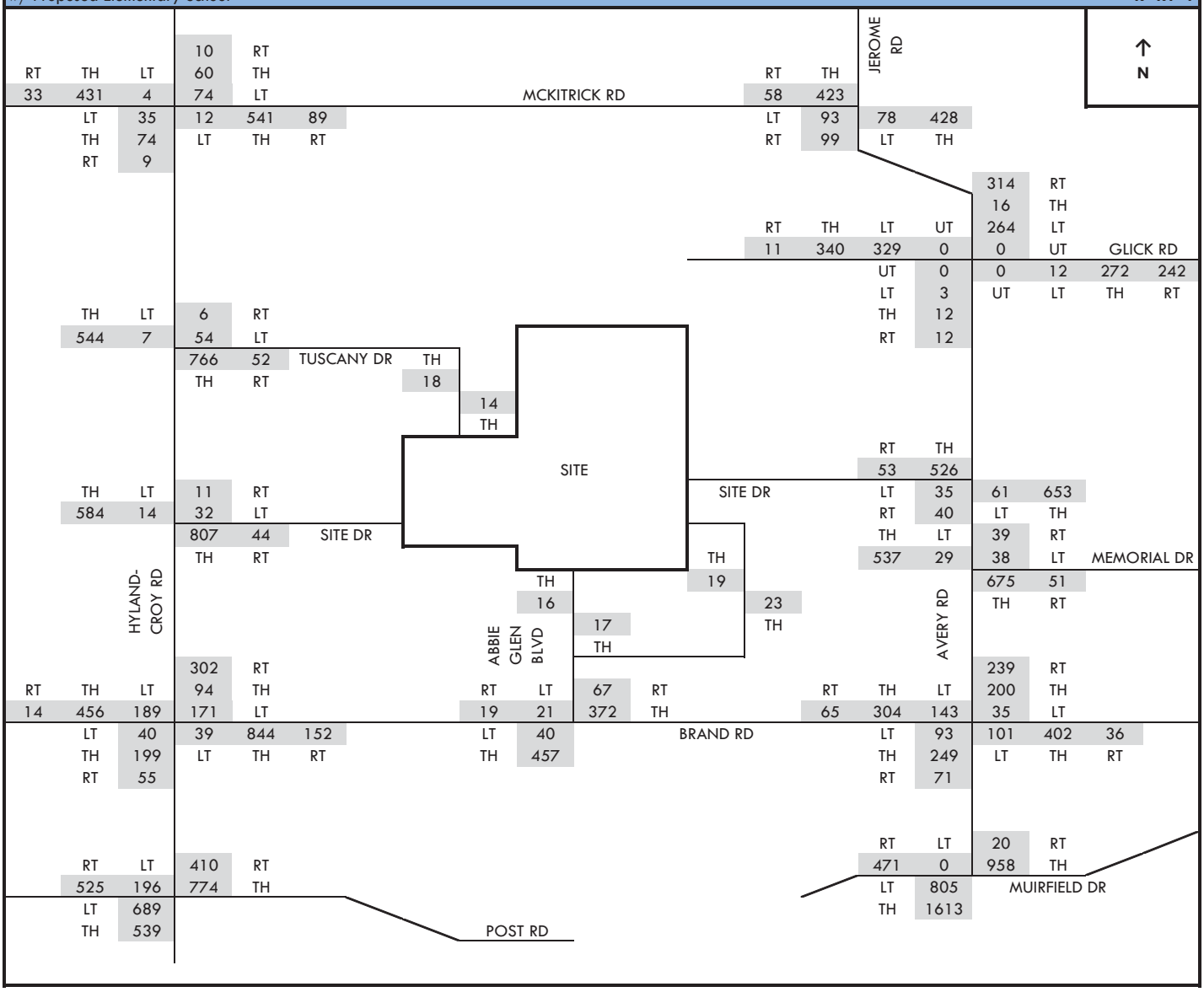

Riviera
Traffic Impact Study
Traffic Volume Calculations

Proposed Elementary School Trip Distribution - w/o Hyland-Croy Site Drive — **PM Peak Hour**
INBOUND — **S1**

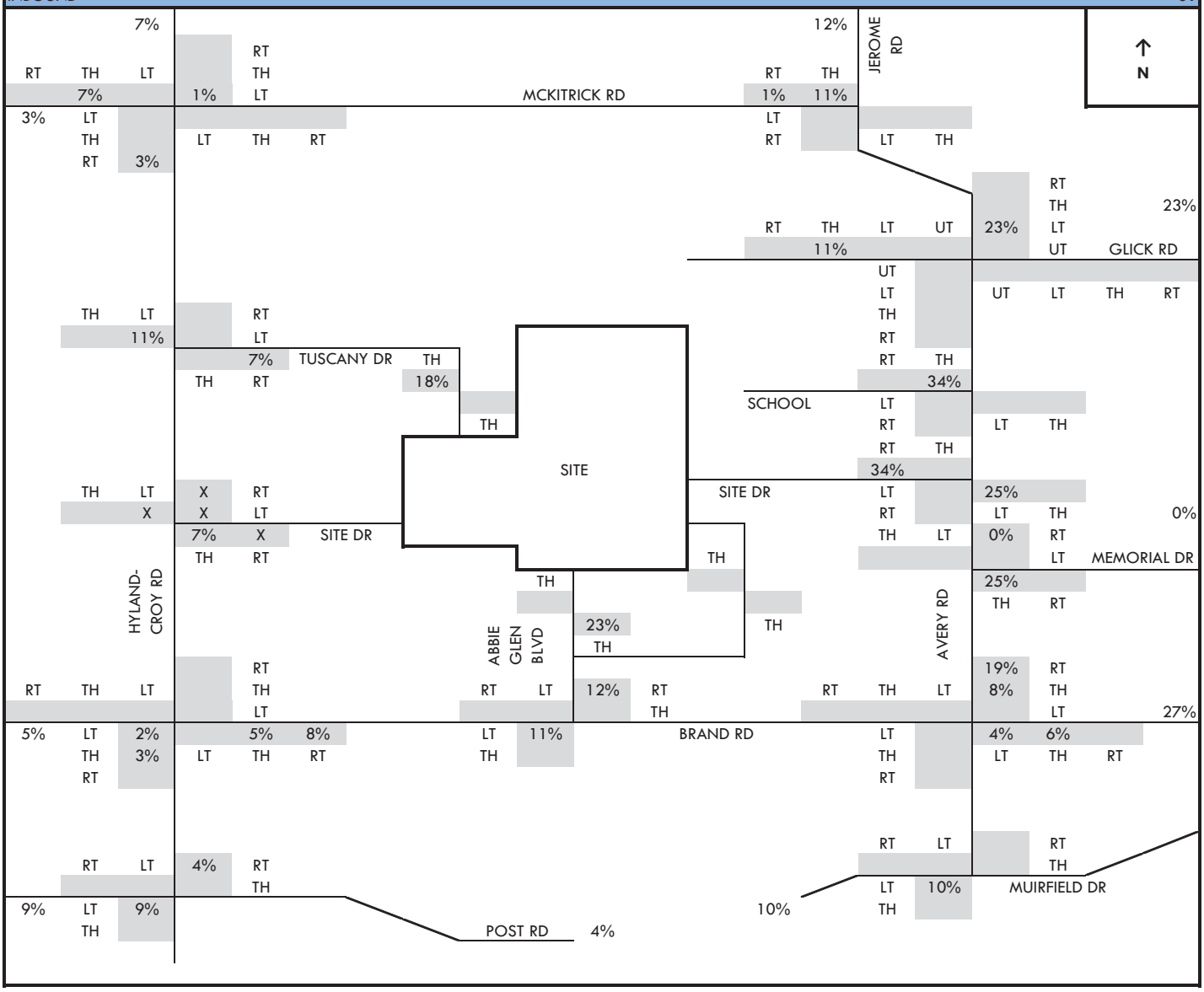

Traffic Volume Calculations

Proposed Elementary School Trip Distribution - w/o Hyland-Croy Site Drive — **PM Peak Hour**

OUTBOUND — **S2**

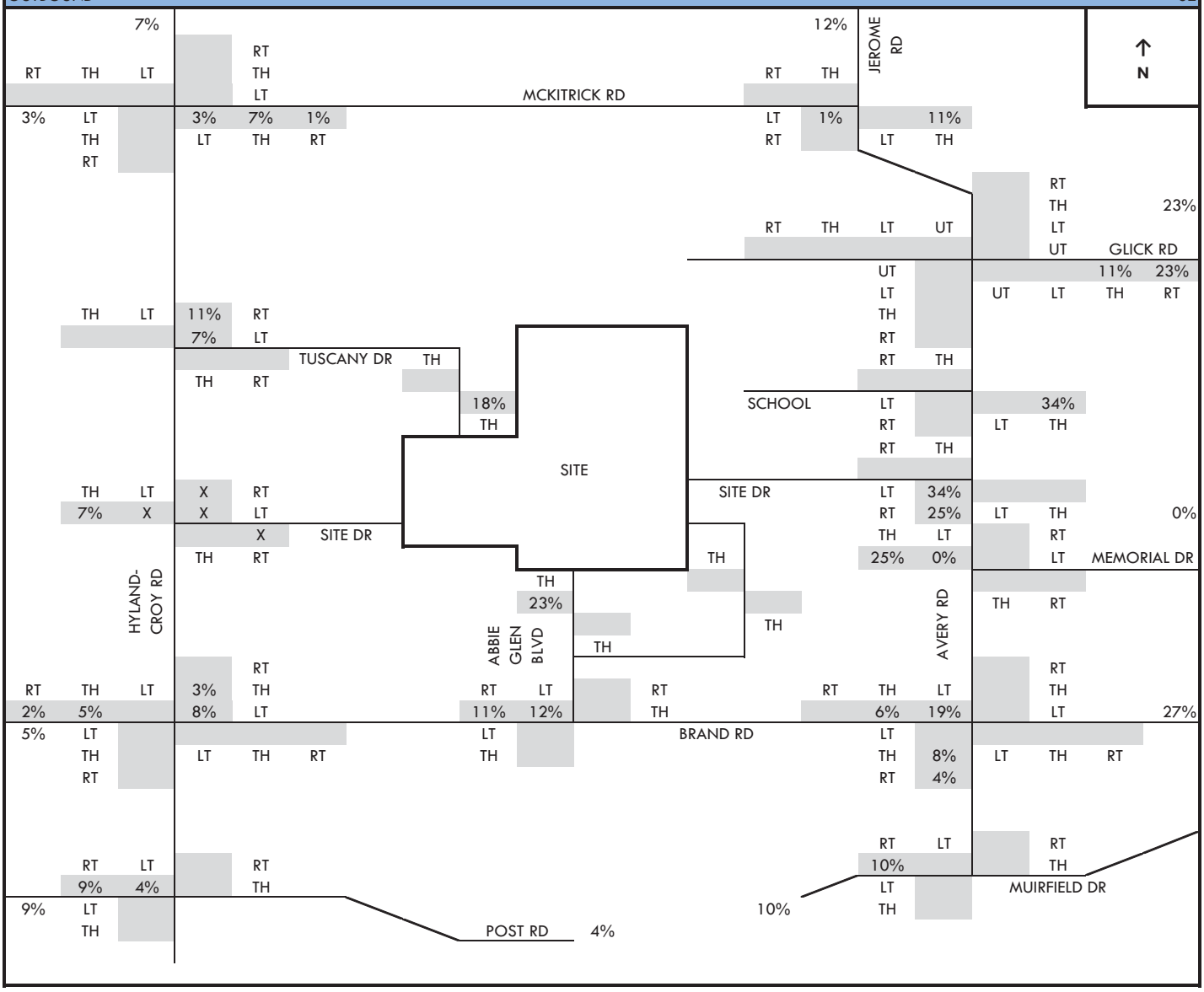

Riviera
Traffic Impact Study
Traffic Volume Calculations

Proposed Elementary School Trip Assignment - w/o Hyland-Croy Site Drive — **PM Peak Hour**
INBOUND (INTERNAL TRIPS REMOVED) — **T1**

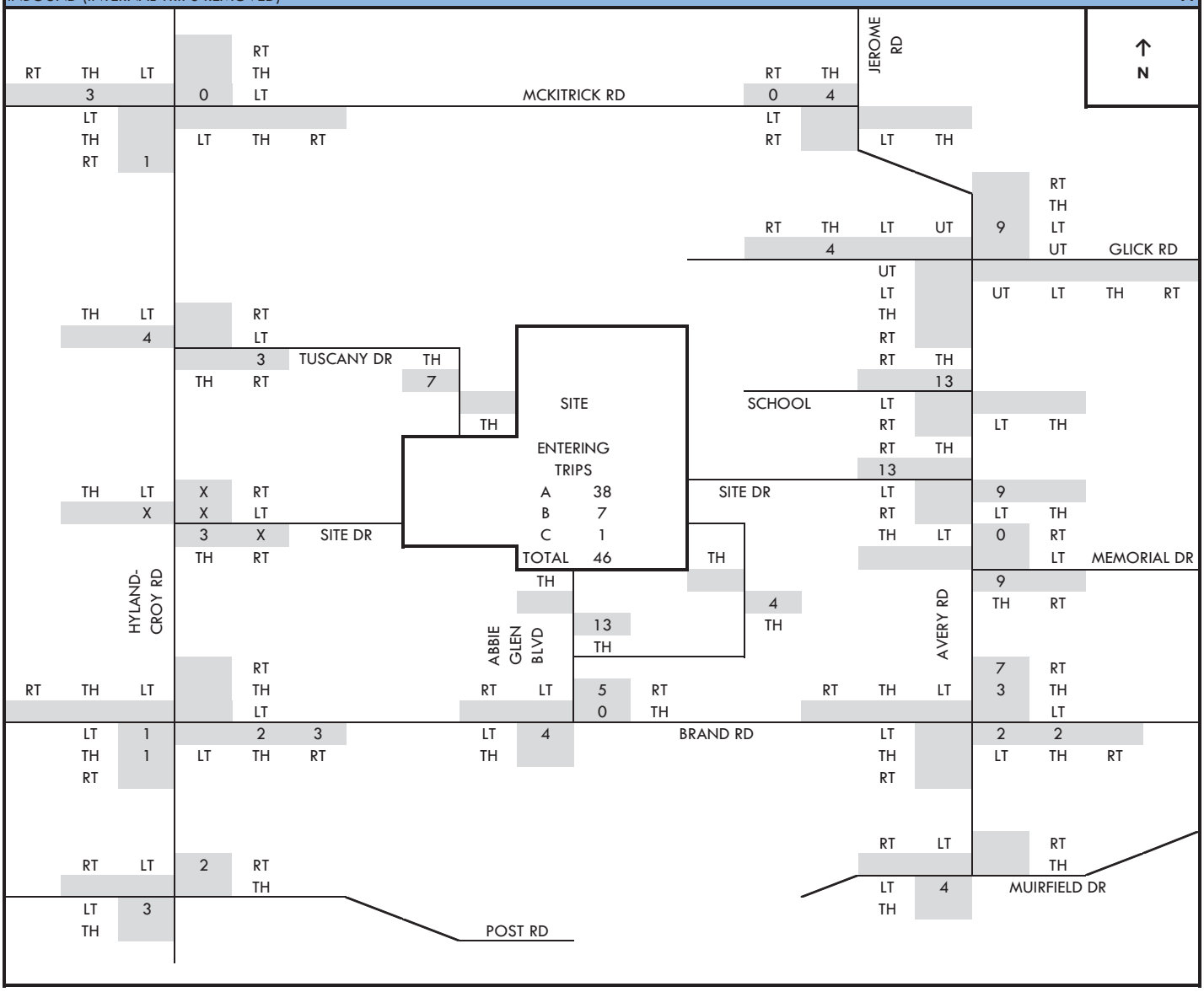

Riviera
Traffic Impact Study
Traffic Volume Calculations

Proposed Elementary School Trip Assignment - w/o Hyland-Croy Site Drive **PM Peak Hour**
OUTBOUND (INTERNAL TRIPS REMOVED) **T2**

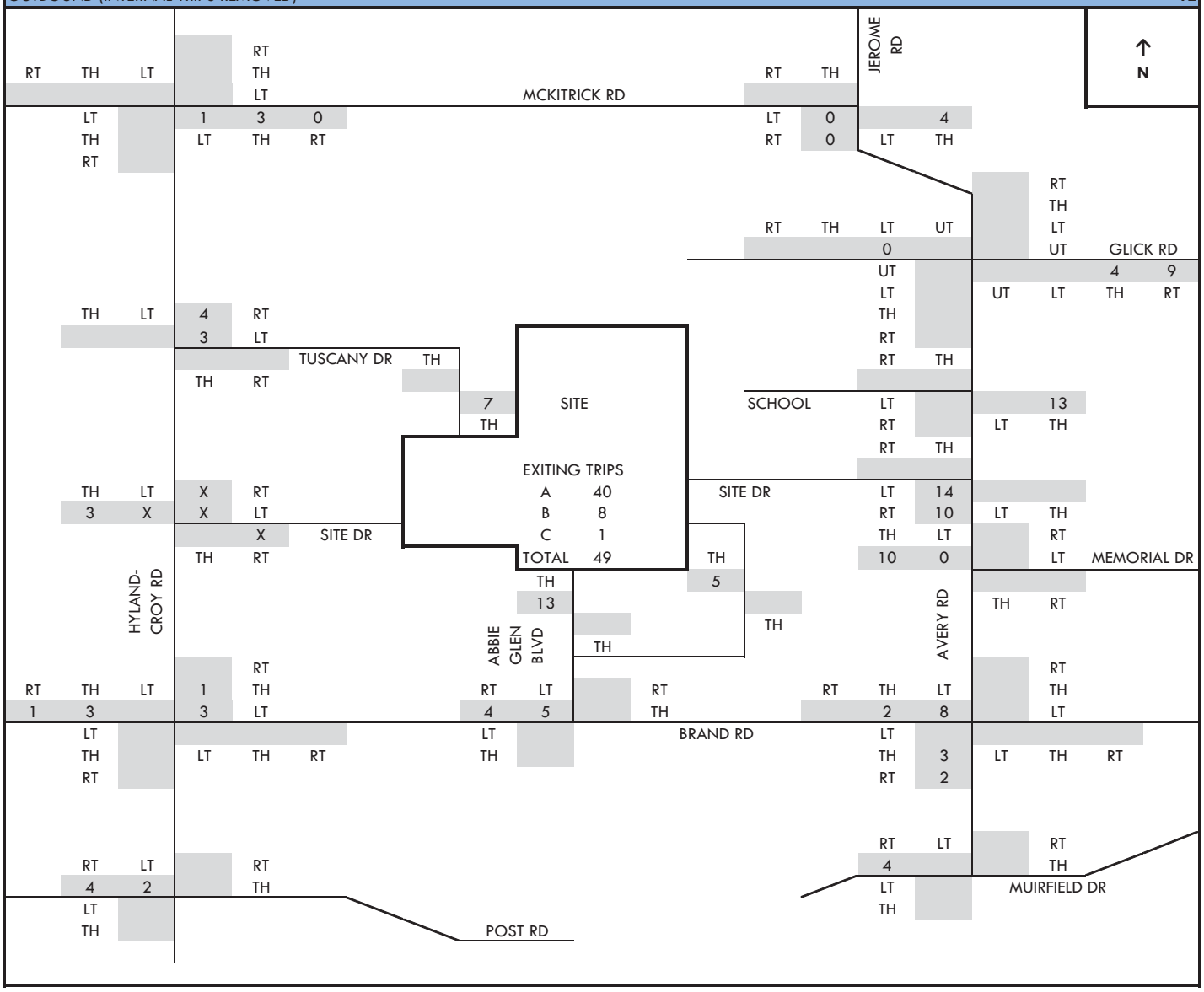

Riviera
Traffic Impact Study
Traffic Volume Calculations

Proposed Elementary School Trips - w/o Hyland-Croy Site Drive — **PM Peak Hour T=T1+T2**

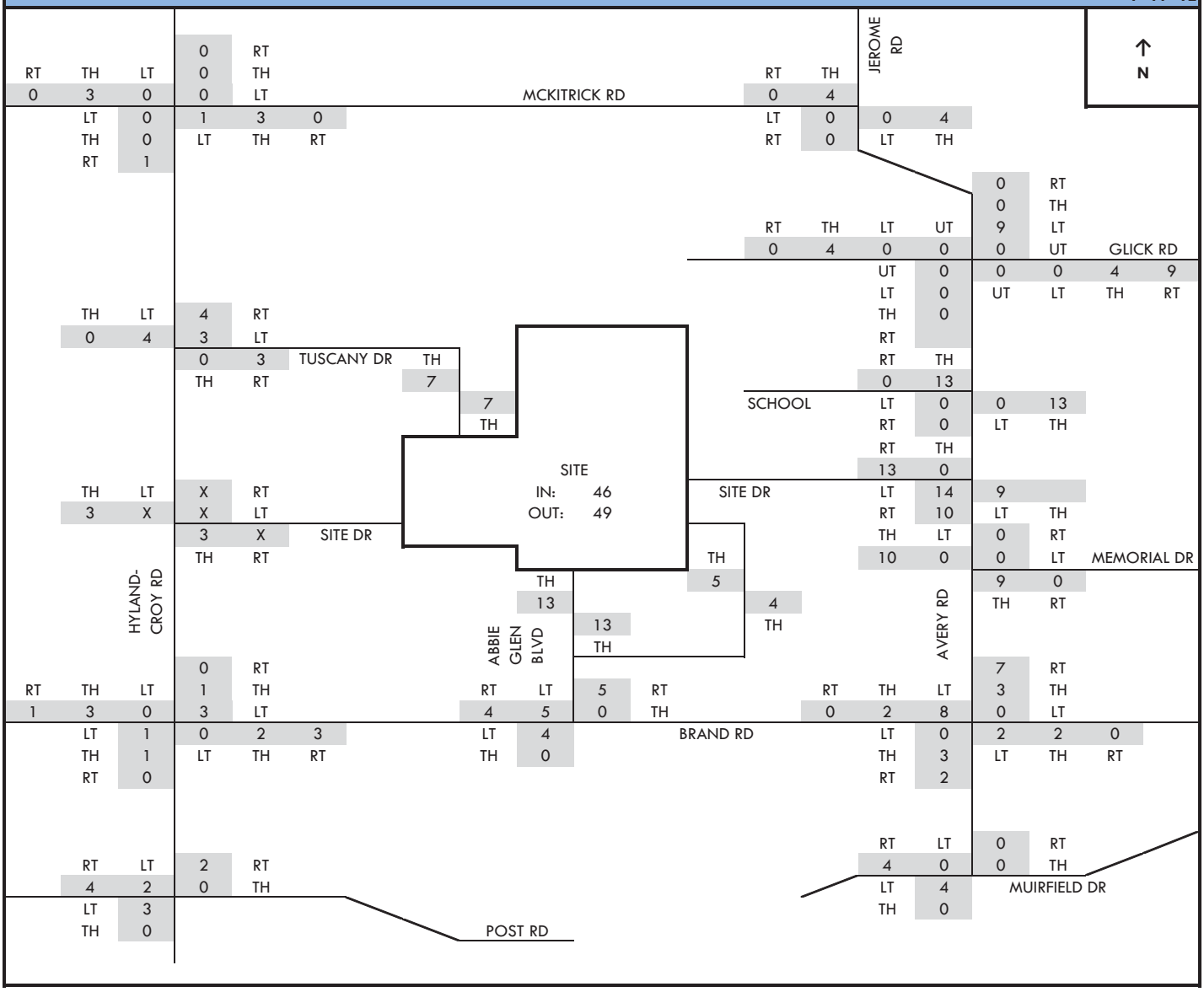

Riviera
Traffic Impact Study
Traffic Volume Calculations

Adjusted School Trips w/o Hyland-Croy Site Dr. — **PM Peak Hour** — **U1=T-N**

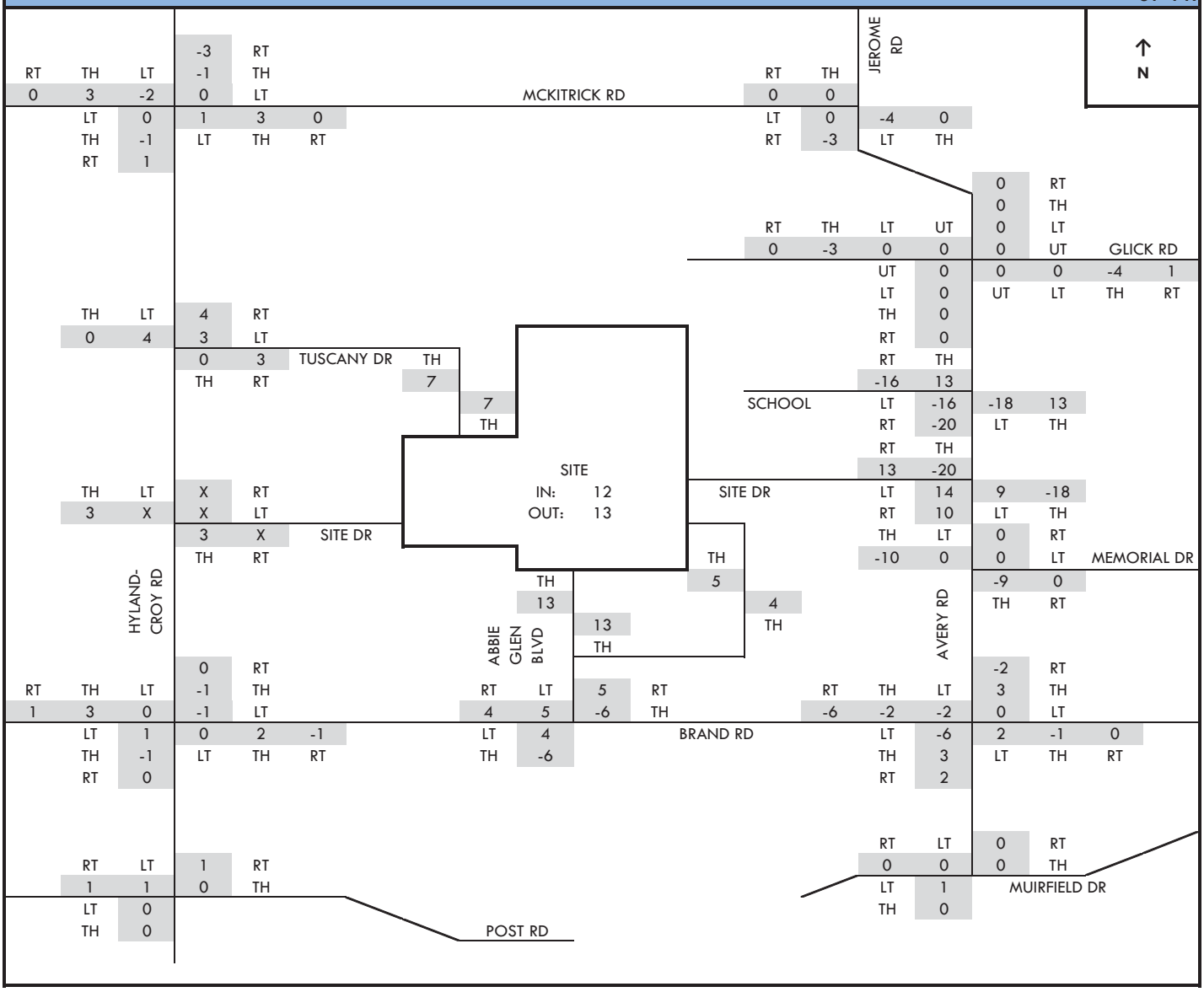

Riviera
Traffic Impact Study
Traffic Volume Calculations

2014 Full Build Traffic - w/o Hyland-Croy Site Drive **PM Peak Hour**
(Existing Deer Run Trips Removed) **U2=K-N**

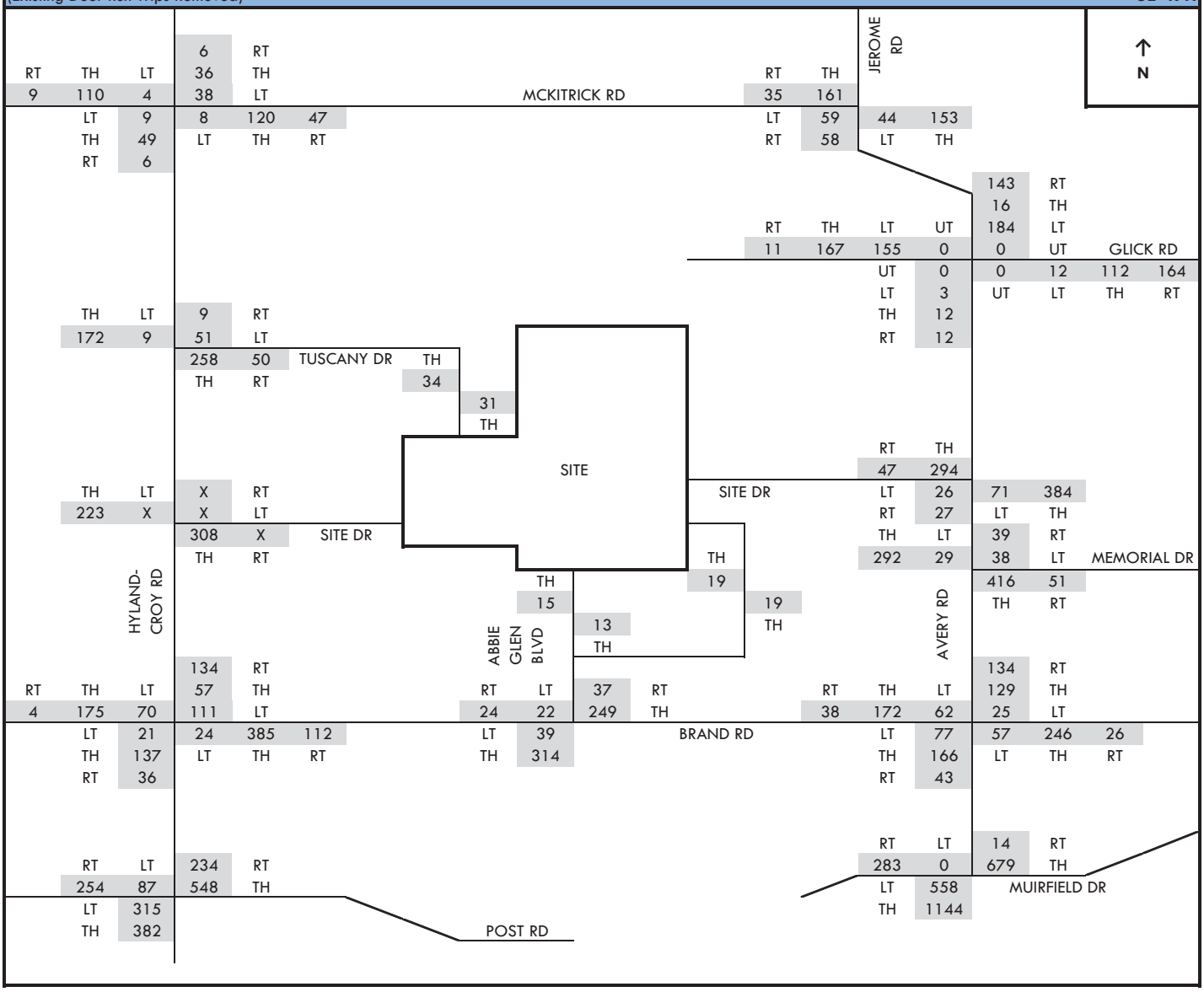

Riviera
Traffic Impact Study
Traffic Volume Calculations

2014 Full Build Traffic - w/o Hyland-Croy Site Drive — **PM Peak Hour**
w/ Proposed Elementary School — **U=U2+T**

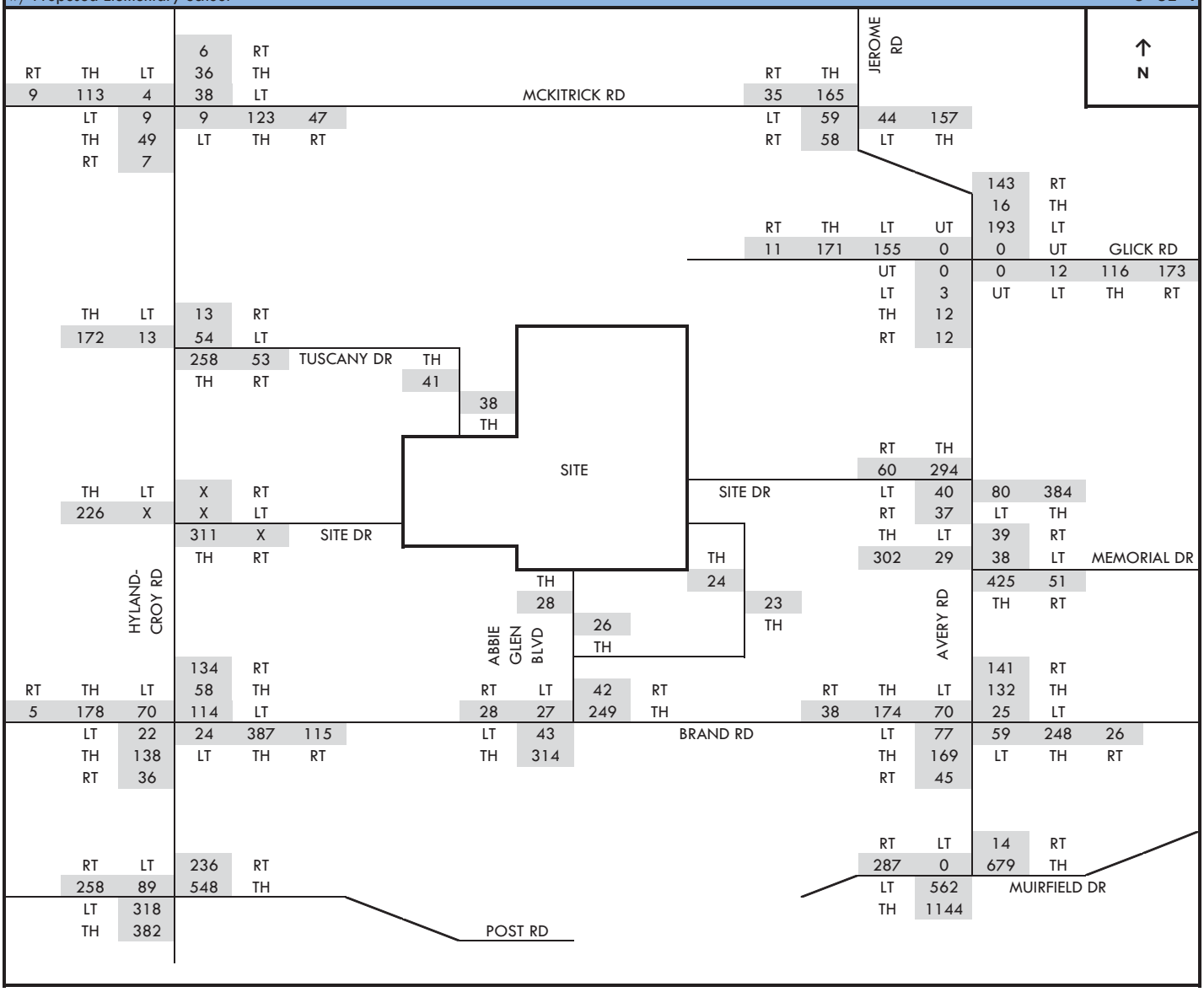

Riviera
Traffic Impact Study
Traffic Volume Calculations

2024 Full Build Traffic - w/o Hyland-Croy Site Drive — **PM Peak Hour**
(Existing Deer Run Trips Removed) — **V1=L-N**

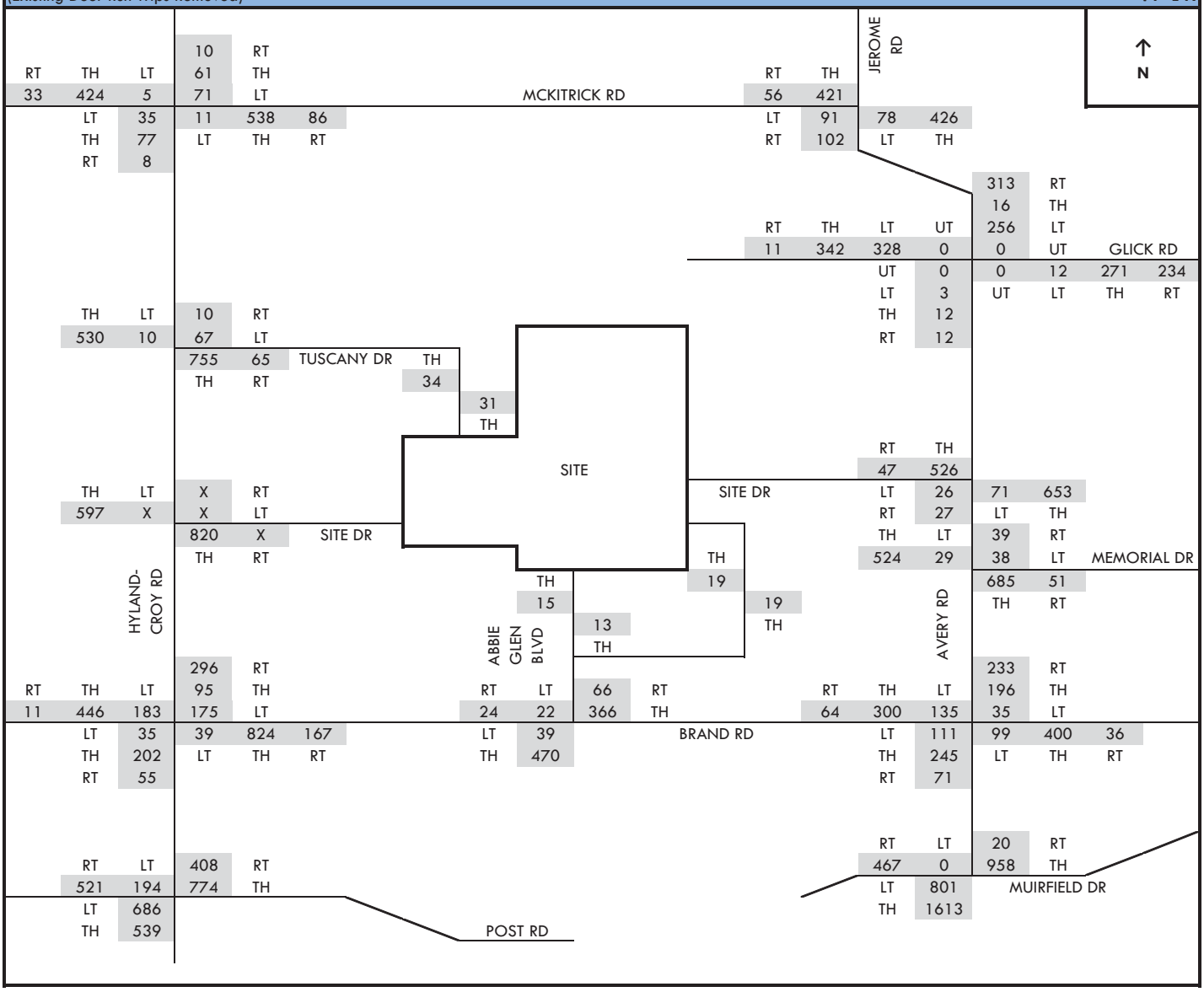

Riviera
Traffic Impact Study
Traffic Volume Calculations

2024 Full Build Traffic - w/o Hyland-Croy Site Drive — **PM Peak Hour**
w/ Proposed Elementary School — **V=V1+T**

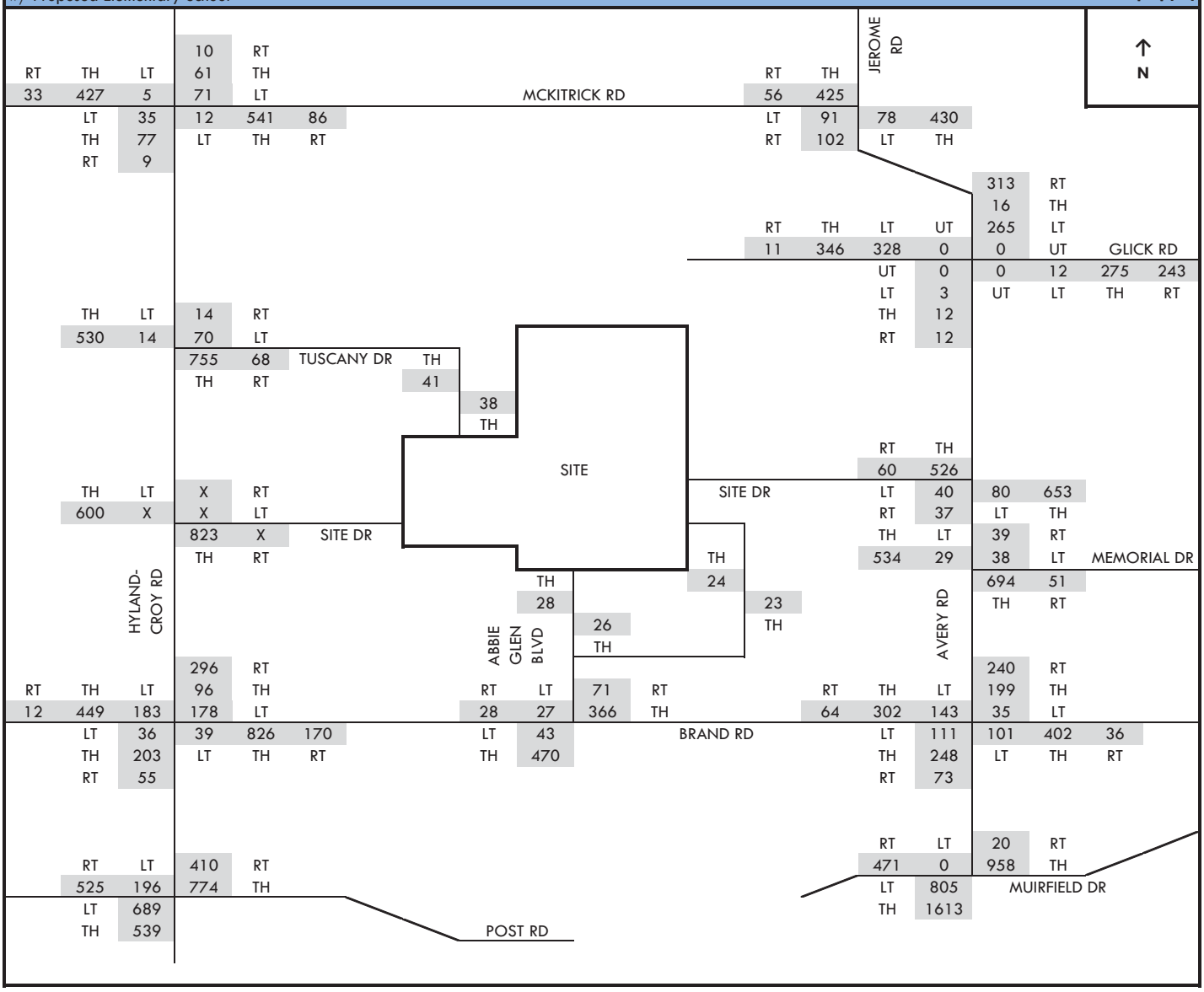

APPENDIX I
WARRANTS
(SIGNAL AND TURN LANE)

Riviera TIS

RT Reduction - 2014 - Hyland-Croy/Site Drive w/ School

(Taken From TEM Section 402-5, Ohio Department of Transportation)

HOUR BEGIN	MINOR STREET				MAINLINE VOLUME (CONFLICTING WITH RIGHT TURN)	MAINLINE APPROACH VOLUME PER LANE	BASE RIGHT TURN	MAINLINE CONGESTION FACTOR %	ADJUSTED RIGHT TURN REDUCTION %	ADJUSTED RIGHT TURNS	ADJUSTED MINOR STREET VOLUMES
	Approach A:	Site Drive									
	Config. "A":	1									
	Mainline Lanes:	1									
	Volumes										
	LEFT	THROUGH	RIGHT	TOTAL (A)							
AM Peak Hour	61	0	26	87	289	289	20%	0%	20%	21	82
PM Peak Hour	32	0	11	43	339	339	20%	0%	20%	9	41

10/15/2014

Hyland-Croy Road - North of Post Road - October 2008 24 Hour Data provided by City of Dublin				
TIME	NB	SB	TOTAL	PERCENT OF PEAK HOUR
7:00	177	271	448	100.0%
8:00	117	248	365	81.6%
9:00	194	229	422	94.3%
10:00	146	165	310	69.2%
11:00	167	194	360	80.5%
12:00	195	170	364	45.8%
13:00	208	161	369	46.4%
14:00	208	204	413	51.9%
15:00	250	205	455	57.2%
16:00	343	211	554	69.7%
17:00	564	231	795	100.0%
18:00	417	241	658	82.7%
19:00	279	161	440	55.4%

2014 FULL BUILD TRAFFIC - HYLAND-CROY ROAD/SITE DRIVE W/ SCHOOL																
	HYLAND-CROY ROAD								SITE DRIVE							
TIME	NBLT	NBTH	NBRT	NB TOTAL	SBLT	SBTH	SBRT	SB TOTAL	EBLT	EBTH	EBRT	EB TOTAL	WBLT	WBTH	WBRT	WB TOTAL
7:00	0	238	51	289	24	352	0	376	0	0	0	0	61	0	21	82
8:00	0	194	42	236	20	287	0	307	0	0	0	0	50	0	17	67
9:00	0	224	48	273	23	332	0	355	0	0	0	0	58	0	20	77
10:00	0	165	35	200	17	244	0	260	0	0	0	0	42	0	15	57
11:00	0	192	41	233	19	283	0	303	0	0	0	0	49	0	17	66
12:00	0	135	20	155	6	96	0	103	0	0	0	0	15	0	4	19
13:00	0	137	20	157	6	97	0	104	0	0	0	0	15	0	4	19
14:00	0	153	23	176	7	109	0	116	0	0	0	0	17	0	5	21
15:00	0	169	25	194	8	120	0	128	0	0	0	0	18	0	5	23
16:00	0	205	31	236	10	146	0	156	0	0	0	0	22	0	6	29
17:00	0	295	44	339	14	210	0	224	0	0	0	0	32	0	9	41
18:00	0	244	36	280	12	174	0	185	0	0	0	0	26	0	7	34
19:00	0	163	24	188	8	116	0	124	0	0	0	0	18	0	5	23

Hyland-Croy Rd / Site Dr
Warrant 1
Ohio Manual of Uniform Traffic Control Devices

2014 Full Build w/ School

CONDITION	# OF LANES	HYLAND-CROY RD			SITE DR			Condition A				Condition B			
		NB	SB	2-WAY	WBLT	WBRT	1-WAY	MAJ	MIN	MAJ	MIN	MAJ	MIN	MAJ	MIN
										80%	80%			80%	80%
Standard	1							500	150	400	120	750	75	600	60
Standard	2+							600	200	480	160	900	100	720	80
High Speed	1			X			X	**350**	**105**	**280**	**84**	**525**	**53**	**420**	**42**
High Speed	2+							420	140	336	112	630	70	504	56
7-8 AM		**289**	**376**	**665**	**61**	**21**	**82**	YES	NO	YES	NO	YES	YES	YES	YES
8-9 AM		236	307	**543**	50	17	**67**	YES	NO	YES	NO	YES	YES	YES	YES
9-10 AM		273	355	**627**	58	20	**77**	YES	NO	YES	NO	YES	YES	YES	YES
10-11 AM		200	260	**460**	42	15	**57**	YES	NO	YES	NO	NO	YES	YES	YES
11-12 NOON		233	303	**535**	49	17	**66**	YES	NO	YES	NO	YES	YES	YES	YES
12-1 PM		155	103	**258**	15	4	**19**	NO	NO	NO	NO	NO	NO	NO	NO
1-2 PM		157	104	**261**	15	4	**19**	NO	NO	NO	NO	NO	NO	NO	NO
2-3 PM		176	116	**292**	17	5	**21**	NO	NO	YES	NO	NO	NO	NO	NO
3-4 PM		194	128	**322**	18	5	**23**	NO	NO	YES	NO	NO	NO	NO	NO
4-5 PM		236	156	**392**	22	6	**29**	YES	NO	YES	NO	NO	NO	NO	NO
5-6 PM		**339**	**224**	**563**	**32**	**9**	**41**	YES	NO	YES	NO	YES	NO	YES	NO
6-7 PM		280	185	**466**	26	7	**34**	YES	NO	YES	NO	NO	NO	YES	NO
7-8 PM		188	124	**312**	18	5	**23**	NO	NO	YES	NO	NO	NO	NO	NO
					Hours Met			**8**	**0**	**11**	**0**	**5**	**5**	**7**	**5**
					Hours Warrant Met			**0**		**0**		**4**		**5**	
					Warrant Satisfied ?			**NO**		**NO**		**NO**		**NO**	

Condition A : NOT MET
Condition B : NOT MET
80% of Condition A and B : NOT MET

Riviera TIS

RT Reduction - 2024 - Hyland-Croy/Site Drive w/ School

(Taken From TEM Section 402-5, Ohio Department of Transportation)

HOUR BEGIN	MINOR STREET				MAINLINE VOLUME (CONFLICTING WITH RIGHT TURN)	MAINLINE APPROACH VOLUME PER LANE	BASE RIGHT TURN	MAINLINE CONGESTION FACTOR %	ADJUSTED RIGHT TURN REDUCTION %	ADJUSTED RIGHT TURNS	ADJUSTED MINOR STREET VOLUMES
	Approach A: Site Drive										
	Config. "A": 1										
	Mainline Lanes: 1										
	Volumes										
	LEFT	THROUGH	RIGHT	TOTAL (A)							
AM Peak Hour	61	0	26	87	559	559	20%	10%	10%	23	84
PM Peak Hour	32	0	11	43	851	851	20%	25%	0%	11	43

10/15/2014

Hyland-Croy Road - North of Post Road - October 2008 24 Hour Data provided by City of Dublin				
TIME	NB	SB	TOTAL	PERCENT OF PEAK HOUR
7:00	177	271	448	100.0%
8:00	117	248	365	81.6%
9:00	194	229	422	94.3%
10:00	146	165	310	69.2%
11:00	167	194	360	80.5%
12:00	195	170	364	45.8%
13:00	208	161	369	46.4%
14:00	208	204	413	51.9%
15:00	250	205	455	57.2%
16:00	343	211	554	69.7%
17:00	564	231	795	100.0%
18:00	417	241	658	82.7%
19:00	279	161	440	55.4%

2024 FULL BUILD TRAFFIC - HYLAND-CROY ROAD/SITE DRIVE W/ SCHOOL																
	HYLAND-CROY ROAD								SITE DRIVE							
TIME	NBLT	NBTH	NBRT	NB TOTAL	SBLT	SBTH	SBRT	SB TOTAL	EBLT	EBTH	EBRT	EB TOTAL	WBLT	WBTH	WBRT	WB TOTAL
7:00	0	508	51	559	24	843	0	867	0	0	0	0	61	0	23	84
8:00	0	414	42	456	20	688	0	707	0	0	0	0	50	0	19	69
9:00	0	479	48	527	23	795	0	818	0	0	0	0	58	0	22	79
10:00	0	352	35	387	17	584	0	600	0	0	0	0	42	0	16	58
11:00	0	409	41	450	19	678	0	698	0	0	0	0	49	0	19	68
12:00	0	370	20	390	6	268	0	274	0	0	0	0	15	0	5	20
13:00	0	374	20	395	6	271	0	277	0	0	0	0	15	0	5	20
14:00	0	419	23	442	7	303	0	310	0	0	0	0	17	0	6	22
15:00	0	461	25	487	8	334	0	342	0	0	0	0	18	0	6	25
16:00	0	562	31	593	10	407	0	417	0	0	0	0	22	0	8	30
17:00	0	807	44	851	14	584	0	598	0	0	0	0	32	0	11	43
18:00	0	667	36	704	12	483	0	495	0	0	0	0	26	0	9	36
19:00	0	447	24	471	8	323	0	331	0	0	0	0	18	0	6	24

Hyland-Croy Rd / Site Dr
Warrant 1
Ohio Manual of Uniform Traffic Control Devices

2024 Full Build w/ School

CONDITION	# OF LANES	HYLAND-CROY RD			SITE DR			Condition A				Condition B			
		NB	SB	2-WAY	WBLT	WBRT	1-WAY	MAJ	MIN	MAJ	MIN	MAJ	MIN	MAJ	MIN
										80%	80%			80%	80%
Standard	1							500	150	400	120	750	75	600	60
Standard	2+							600	200	480	160	900	100	720	80
High Speed	1			X			X	**350**	**105**	**280**	**84**	**525**	**53**	**420**	**42**
High Speed	2+							420	140	336	112	630	70	504	56
7-8 AM		**559**	**867**	**1426**	**61**	**23**	**84**	YES	NO	YES	YES	YES	YES	YES	YES
8-9 AM		456	707	**1163**	50	19	**69**	YES	NO	YES	NO	YES	YES	YES	YES
9-10 AM		527	818	**1345**	58	22	**79**	YES	NO	YES	NO	YES	YES	YES	YES
10-11 AM		387	600	**987**	42	16	**58**	YES	NO	YES	NO	YES	YES	YES	YES
11-12 NOON		450	698	**1148**	49	19	**68**	YES	NO	YES	NO	YES	YES	YES	YES
12-1 PM		390	274	**664**	15	5	**20**	YES	NO	YES	NO	YES	NO	YES	NO
1-2 PM		395	277	**672**	15	5	**20**	YES	NO	YES	NO	YES	NO	YES	NO
2-3 PM		442	310	**752**	17	6	**22**	YES	NO	YES	NO	YES	NO	YES	NO
3-4 PM		487	342	**828**	18	6	**25**	YES	NO	YES	NO	YES	NO	YES	NO
4-5 PM		593	417	**1009**	22	8	**30**	YES	NO	YES	NO	YES	NO	YES	NO
5-6 PM		**851**	**598**	**1449**	**32**	**11**	**43**	YES	NO	YES	NO	YES	NO	YES	YES
6-7 PM		704	495	**1198**	26	9	**36**	YES	NO	YES	NO	YES	NO	YES	NO
7-8 PM		471	331	**802**	18	6	**24**	YES	NO	YES	NO	YES	NO	YES	NO
					Hours Met			**13**	**0**	**13**	**1**	**13**	**5**	**13**	**6**
					Hours Warrant Met			**0**		**1**		**5**		**6**	
					Warrant Satisfied ?			**NO**		**NO**		**NO**		**NO**	

Condition A : NOT MET
Condition B : NOT MET
80% of Condition A and B : NOT MET

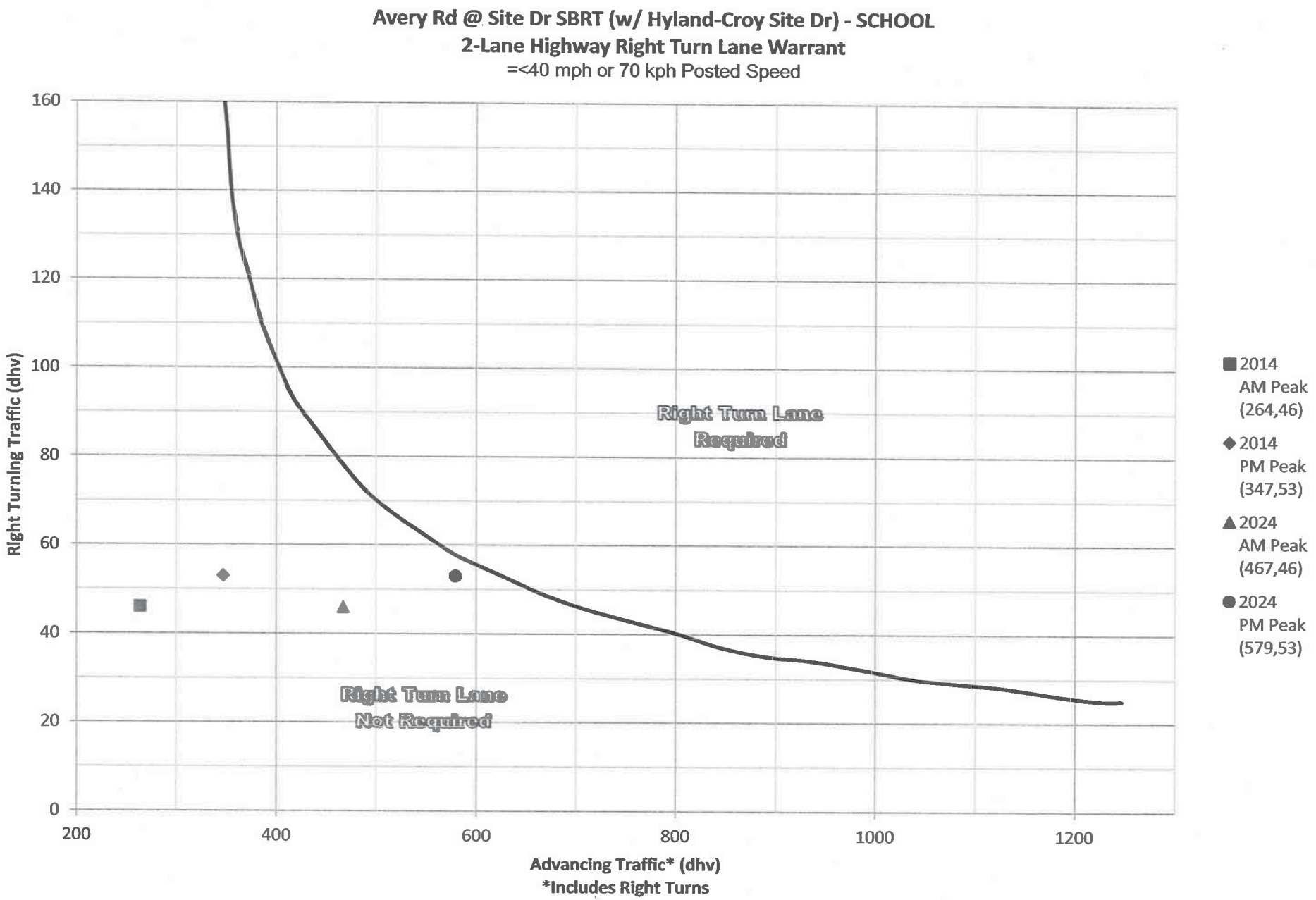
Avery Rd @ Site Dr SBRT (w/ Hyland-Croy Site Dr) - SCHOOL
2-Lane Highway Right Turn Lane Warrant
=<40 mph or 70 kph Posted Speed
Right Turning Traffic (dhv)
160
140
120
100
80
60
40
20
0
200
400
600
800
1000
1200
Advancing Traffic* (dhv)
*Includes Right Turns
Right Turn Lane Required
Right Turn Lane Not Required
2014 AM Peak (264,46)
2014 PM Peak (347,53)
2024 AM Peak (467,46)
2024 PM Peak (579,53)

Avery Rd @ Site Dr SBRT (w/o Hyland-Croy Site Dr) - SCHOOL
2-Lane Highway Right Turn Lane Warrant
=<40 mph or 70 kph Posted Speed

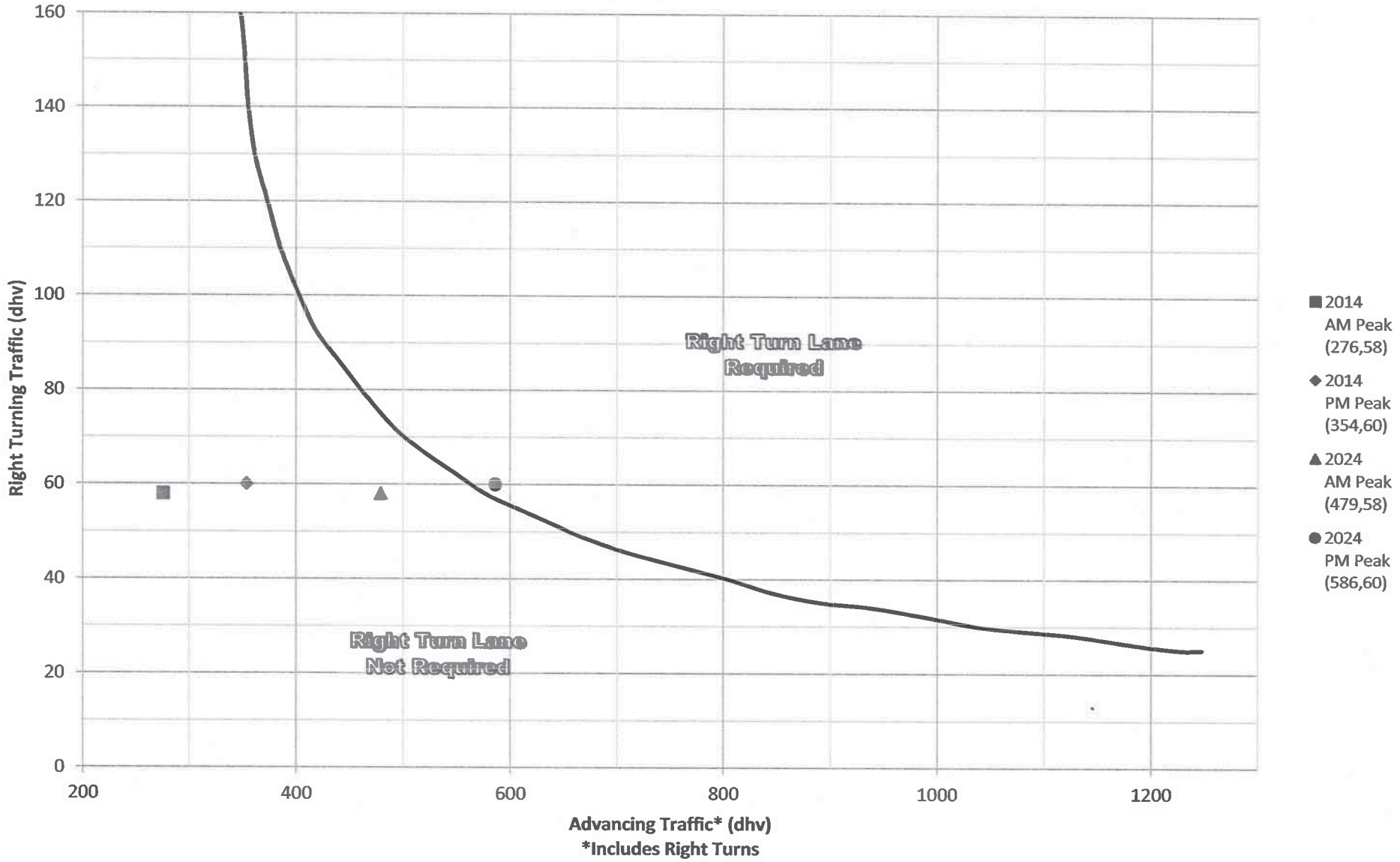

Hyland-Croy @ Site Dr SBLT - SCHOOL
2-Lane Highway Left Turn Lane Warrant
>40 mph or 70 kph Posted Speed

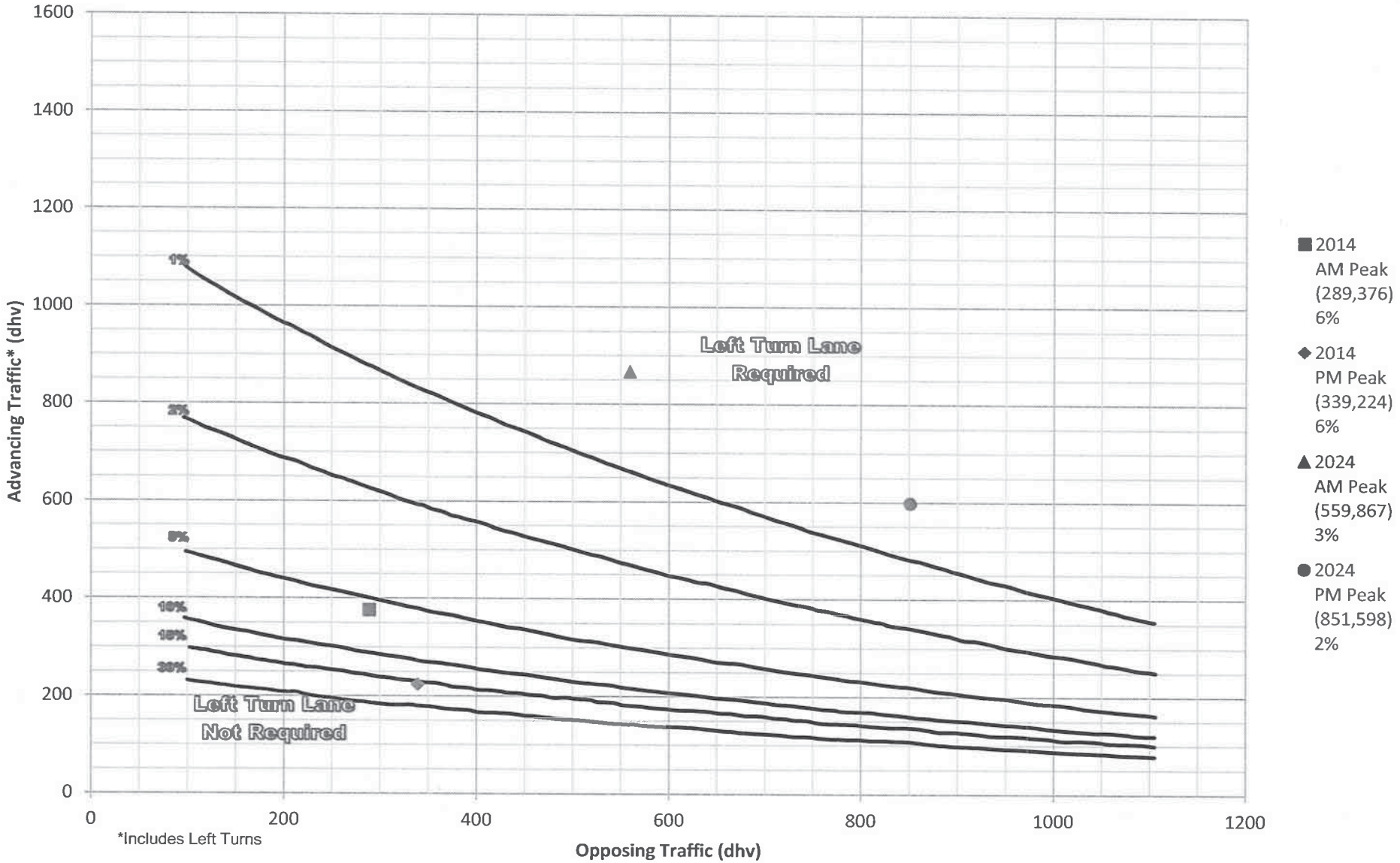

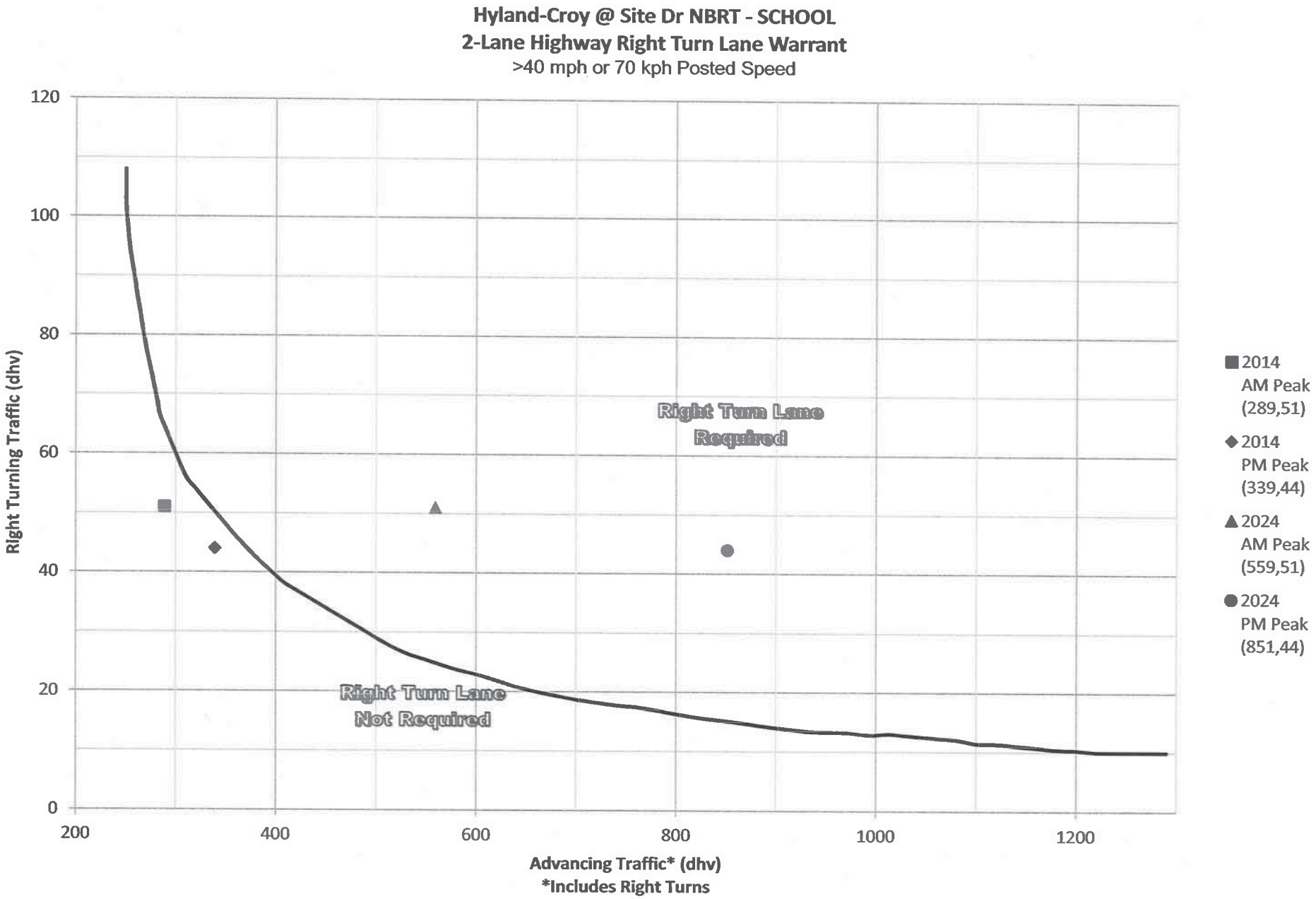
Hyland-Croy @ Site Dr NBRT - SCHOOL
2-Lane Highway Right Turn Lane Warrant
>40 mph or 70 kph Posted Speed
Right Turning Traffic (dhv)
120
100
80
60
40
20
0
200
400
600
800
1000
1200
Advancing Traffic* (dhv)
*Includes Right Turns
Right Turn Lane Required
Right Turn Lane Not Required
2014 AM Peak (289,51)
2014 PM Peak (339,44)
2024 AM Peak (559,51)
2024 PM Peak (851,44)

APPENDIX J
CAPACITY ANALYSIS REPORTS
w/ Deer Run Elementary

Time Period	Year	Scenario	Conditions	EBLT	EBTH	EBRT	APPROACH	WBLT	WBTH	WBRT	APPROACH	NBLT	NBTH	NBRT	APPROACH	SBLT	SBTH	SBRT	APPROACH	TOTAL
Hyland-Croy Rd / McKitrick Rd																				
AM	2014	Full Build	Two-way Stop		B/11.4		B/11.4		B/14.2		B/14.2		A/7.5				A/7.6			
		Full Build w/o HCSD	Two-way Stop		B/11.3		B/11.3		B/13.7		B/13.7		A/7.5				A/7.6			
		Full Build	Four-way Stop		A/8.31		A/8.31		A/9.32		A/9.32		A/9.21		A/9.21		A/8.95		A/8.95	A/9.06
		Full Build w/o HCSD	Four-way Stop		A/8.26		A/8.26		A/9.17		A/9.17		A/9.03		A/9.03		A/8.89		A/8.89	A/8.93
	2024	Full Build	Two-way Stop		F/54.8		F/54.8		F/306.0		F/306.0		A/8.8				A/8.2			
		Full Build w/o HCSD	Two-way Stop		F/53.1		F/53.1		F/256.1		F/256.1		A/8.8				A/8.2			
		Full Build	Four-way Stop		B/14.94		B/14.94		C/18.80		C/18.80		E/39.86		E/39.86		F/100.19		F/100.19	F/59.52
		Full Build w/o HCSD	Four-way Stop		B/14.70		B/14.70		C/18.19		C/18.19		E/35.32		E/35.32		F/94.28		F/94.28	F/55.79
		Full Build	Roundabout	B/18.4	B/12.0	B/13.1	B/14.4	B/13.0	A/7.4	A/8.0	B/11.2	B/14.3	A/7.9	A/9.0	A/8.4	B/15.1	A/9.5	B/10.6	A/9.6	A/10.0
		Full Build w/o HCSD	Roundabout	B/18.3	B/11.9	B/13.0	B/14.3	B/12.9	A/7.4	A/7.9	B/11.0	B/14.3	A/7.9	A/9.0	A/8.3	B/14.8	A/9.3	B/10.3	A/9.4	A/9.8
PM	2014	Full Build	Two-way Stop		B/11.9		B/11.9		B/12.3		B/12.3		A/7.5				A/7.6			
		Full Build w/o HCSD	Two-way Stop		B/11.9		B/11.9		B/12.2		B/12.2		A/7.5				A/7.6			
		Full Build	Four-way Stop		A/8.28		A/8.28		A/8.52		A/8.52		A/8.70		A/8.70		A/8.51		A/8.51	A/8.56
		Full Build w/o HCSD	Four-way Stop		A/8.28		A/8.28		A/8.49		A/8.49		A/8.69		A/8.69		A/8.48		A/8.48	A/8.54
	2024	Full Build	Two-way Stop		F/92.3		F/92.3		F/228.5		F/228.5		A/8.4				A/9.0			
		Full Build w/o HCSD	Two-way Stop		F/94.7		F/94.7		F/220.0		F/220.0		A/8.4				A/9.0			
		Full Build	Four-way Stop		B/14.03		B/14.03		B/14.85		B/14.85		F/127.74		F/127.74		E/41.92		E/41.92	F/76.92
		Full Build w/o HCSD	Four-way Stop		B/14.07		B/14.07		B/14.74		B/14.74		F/125.29		F/125.29		E/41.05		E/41.05	F/75.44
		Full Build	Roundabout	B/16.8	B/10.4	B/11.5	B/12.4	B/14.4	A/8.9	A/9.4	B/11.8	B/14.6	A/8.1	A/9.3	A/8.4	B/13.9	A/8.3	A/9.4	A/8.5	A/9.1
		Full Build w/o HCSD	Roundabout	B/16.8	B/10.3	B/11.4	B/12.3	B/14.4	A/8.9	A/9.4	B/11.7	B/14.6	A/8.2	A/9.3	A/8.4	B/13.8	A/8.3	A/9.3	A/8.4	A/9.1
Hyland-Croy Rd / Tuscany Dr																				
AM	2014	Full Build	Two-way Stop						B/14.5		B/14.5					A/8.0				
		Full Build w/o HCSD	Two-way Stop						B/14.5		B/14.5					A/8.0				
	2024	Full Build	Two-way Stop						F/98.7		F/98.7					A/8.9				
		Full Build w/o HCSD	Two-way Stop						F/124.1		F/124.1					A/8.9				
PM	2014	Full Build	Two-way Stop						B/12.4		B/12.4					A/8.1				
		Full Build w/o HCSD	Two-way Stop						B/12.5		B/12.5					A/8.1				
	2024	Full Build	Two-way Stop						E/47.6		E/47.6					B/10.1				
		Full Build w/o HCSD	Two-way Stop						F/56.8		F/56.8					B/10.2				

X/X = Overall LOS / Average Delay Per Vehicle

Time Period	Year	Scenario	Conditions	EBLT	EBTH	EBRT	APPROACH	WBLT	WBTH	WBRT	APPROACH	NBLT	NBTH	NBRT	APPROACH	SBLT	SBTH	SBRT	APPROACH	TOTAL
Hyland-Croy Rd / Site Dr																				
AM	2014	Full Build	Two-way Stop						C/15.3		C/15.3					A/8.0				
		Full Build	Two-way Stop w/ Warranted SBLT						C/15.3		C/15.3					A/8.0				
	2024	Full Build	Two-way Stop						F/56.6		F/56.6					A/8.8				
		Full Build	Roundabout - Single Lane					B/13.5		A/8.5	B/12.0		A/7.3	A/8.4	A/7.4	B/13.5	A/7.9		A/8.0	A/8.0
PM	2014	Full Build	Two-way Stop						B/13.0		B/13.0					A/8.1				
		Full Build	Two-way Stop w/ Warranted SBLT						B/13.0		B/13.0					A/8.1				
	2024	Full Build	Two-way Stop						E/42.0		E/42.0					B/10.0				
		Full Build	Roundabout - Single Lane					B/16.5		B/11.6	B/15.3		A/7.3	A/8.4	A/7.3	B/13.0	A/7.4		A/7.5	A/7.6
Hyland-Croy Rd / Brand Rd																				
AM	2014	Full Build	Roundabout - Single Lane	B/17.1	A/8.7	B/10.0	B/10.0	B/11.9	A/4.9	A/6.1	A/8.5	B/15.1	A/7.1	A/9.1	A/8.2	B/13.9	A/6.8	A/8.7	A/9.4	A/8.8
		Full Build w/o HCSD	Roundabout - Single Lane	B/17.0	A/8.6	A/9.9	A/9.7	B/11.8	A/4.8	A/6.0	A/8.8	B/15.0	A/7.0	A/8.9	A/8.2	B/14.0	A/6.9	A/8.9	A/9.5	A/8.9
	2024	Full Build	Roundabout - Single Lane	C/31.6	C/23.2	C/24.6	C/24.6	B/16.4	A/9.3	B/10.6	B/12.7	B/16.9	A/8.9	B/10.7	A/9.8	B/17.0	A/9.9	A/9.4	B/12.1	B/12.7
		Full Build w/o HCSD	Roundabout - Single Lane	C/30.2	C/21.8	C/23.1	C/23.0	B/15.9	A/8.9	B/10.1	B/12.5	B/16.5	A/8.6	B/10.5	A/9.6	B/17.2	B/10.1	A/9.5	B/12.2	B/12.5
		Full Build	Roundabout - 2 NB/SB Lanes	B/18.9	B/10.6	B/11.6	B/11.9	B/13.9	A/7.2	A/8.0	B/10.2	B/16.8	A/8.9	B/10.2	A/9.6	B/14.8	A/7.8	A/9.1	A/10.0	B/10.1
		Full Build w/o HCSD	Roundabout - 2 NB/SB Lanes	C/26.9	B/18.7	B/19.6	B/19.8	B/13.8	A/7.0	A/7.9	B/10.4	B/16.7	A/8.8	B/10.1	A/9.5	B/15.0	A/7.9	A/9.3	B/10.1	B/10.9
		Full Build	Roundabout - 2 NB/SB Lanes w/ WBRT	B/18.9	B/10.6	B/11.6	B/11.9	B/11.8	A/5.0	A/6.7	A/8.4	B/16.8	A/8.9	B/10.2	A/9.6	B/14.8	A/7.8	A/9.1	A/10.0	A/9.7
		Full Build w/o HCSD	Roundabout - 2 NB/SB Lanes w/ WBRT	C/26.9	B/18.6	B/19.6	B/19.7	B/11.8	A/5.0	A/7.0	A/8.7	B/16.7	A/8.8	B/10.1	A/9.5	B/15.0	A/7.9	A/9.3	B/10.1	B/10.5
PM	2014	Full Build	Roundabout - Single Lane	B/16.3	A/7.9	A/9.6	A/9.3	B/13.4	A/6.4	A/7.4	A/9.3	B/15.0	A/6.9	A/9.3	A/7.7	B/13.7	A/6.7	A/8.7	A/8.7	A/8.6
		Full Build w/o HCSD	Roundabout - Single Lane	B/16.3	A/7.9	A/9.6	A/9.1	B/13.3	A/6.2	A/7.2	A/9.3	B/15.0	A/6.8	A/9.2	A/7.7	B/13.8	A/6.7	A/8.7	A/8.7	A/8.5
	2024	Full Build	Roundabout - Single Lane	C/23.6	B/15.2	B/16.9	B/16.7	F/354.2	F/347.2	F/348.1	F/349.8	C/25.1	B/16.9	B/11.0	B/16.4	B/14.1	A/7.1	A/8.8	A/9.1	F/88.5
		Full Build w/o HCSD	Roundabout - Single Lane	C/23.4	B/15.0	B/16.7	B/16.4	F/322.6	F/315.5	F/316.5	F/318.2	C/23.6	B/15.5	B/11.0	B/15.0	B/14.2	A/7.1	A/8.8	A/9.2	F/81.7
		Full Build	Roundabout - 2 NB/SB Lanes	B/18.3	B/10.1	B/11.4	B/11.4	F/41.4	F/34.6	F/35.2	D/37.0	B/17.7	A/9.4	B/10.8	A/9.9	B/14.6	A/7.6	A/9.0	A/9.6	B/16.0
		Full Build w/o HCSD	Roundabout - 2 NB/SB Lanes	B/18.3	B/10.1	B/11.4	B/11.3	F/38.6	F/31.8	F/32.4	D/34.2	B/17.6	A/9.3	B/10.7	A/9.9	B/14.6	A/7.7	A/9.1	A/9.7	B/15.4
		Full Build	Roundabout - 2 NB/SB Lanes w/ WBRT	C/27.6	B/19.2	C/20.9	C/20.6	C/33.7	C/26.7	C/22.2	C/26.4	C/25.4	B/17.2	B/11.0	B/16.6	B/15.5	A/8.5	A/9.4	B/10.5	B/17.7
		Full Build w/o HCSD	Roundabout - 2 NB/SB Lanes w/ WBRT	C/27.1	B/18.7	C/20.4	C/20.1	C/31.5	C/24.5	B/19.4	C/24.0	C/23.9	B/15.7	B/11.0	B/15.2	B/15.6	A/8.5	A/9.5	B/10.5	B/16.6

X/X = Overall LOS / Average Delay Per Vehicle

Time Period	Year	Scenario	Conditions	EBLT	EBTH	EBRT	APPROACH	WBLT	WBTH	WBRT	APPROACH	NBLT	NBTH	NBRT	APPROACH	SBLT	SBTH	SBRT	APPROACH	TOTAL
Hyland-Croy Rd / Post Rd																				
AM	2014	Full Build	Two-way Stop	A/9.0													F/294.4		F/294.4	
		Full Build	Signalized	B/13.5	B/12.1		B/12.5		B/19.4	B/19.5	B/19.4						D/52.3		D/52.3	C/25.4
	2024	Full Build	Two-way Stop	B/11.8													F/3932		F/3932	
		Full Build	Signalized	F/308.5	D/35.5		F/124.1		E/55.9	E/57.8	E/56.8						F/94.7		F/94.7	F/99.6
		Full Build	Signalized (w/ SBRT)	C/25.6	B/17.1		B/19.8		D/35.7	D/36.2	D/35.9					C/29.6		C/23.3	C/25.4	C/25.2
		Full Build	Signalized (w/ SBRT, WBRT)	C/20.1	B/17.1		B/18.1		C/31.7	A/6.4	C/24.5					C/29.6		C/22.0	C/24.6	C/21.7
		Full Build	Roundabout	B/16.3	A/7.6		B/10.4		A/5.5	A/6.4	A/5.8					F/82.5		F/76.8	F/78.7	C/33.3
		Full Build	Roundabout w/ SBRT	B/16.8	A/8.0		B/10.9		A/5.5	A/6.4	A/5.8					B/14.8		B/10.0	B/11.6	B/10.1
PM	2014	Full Build	Two-way Stop	B/13.8													F/745.0		F/745.0	
		Full Build	Signalized	B/17.9	A/8.0		B/12.5		C/21.2	C/21.4	C/21.3						D/47.6		D/47.6	C/22.9
	2024	Full Build	Two-way Stop	F/255.2													F			
		Full Build	Signalized	F/712.8	C/26.0		F/411.4		F/344.5	F/356.4	F/350.1						D/50.1		D/50.1	F/305.1
		Full Build	Signalized (w/ SBRT)	F/88.7	A/3.6		D/51.3		F/73.7	F/79.7	E/76.5					F/83.8		C/25.3	D/41.2	E/58.5
		Full Build	Signalized (w/ SBRT, WBRT)	D/53.2	A/4.7		C/31.9		D/37.4	C/22.8	C/32.4					D/54.5		C/22.4	C/31.2	C/31.9
		Full Build	Roundabout	B/15.0	A/6.8		B/11.4		C/25.3	C/25.2	C/25.3					F/159.3		F/153.5	F/155.1	D/49.7
		Full Build	Roundabout w/ SBRT	B/15.4	A/7.1		B/11.7		C/26.8	C/26.6	C/26.7					B/16.8		B/13.4	B/14.3	B/18.0
Brand Rd / Abbie Glen Blvd																				
AM	2014	Full Build	Two-way Stop	A/8.4													B/14.5		B/14.5	
		Full Build w/o HCSD	Two-way Stop	A/8.5													C/15.7		C/15.7	
	2024	Full Build	Two-way Stop	A/9.1													C/20.5		C/20.5	
		Full Build w/o HCSD	Two-way Stop	A/9.2													C/24.0		C/24.0	
PM	2014	Full Build	Two-way Stop	A/8.0													B/12.9		B/12.9	
		Full Build w/o HCSD	Two-way Stop	A/8.0													B/13.2		B/13.2	
	2024	Full Build	Two-way Stop	A/8.4													C/16.9		C/16.9	
		Full Build w/o HCSD	Two-way Stop	A/8.4													C/17.5		C/17.5	

X/X = Overall LOS / Average Delay Per Vehicle

Time Period	Year	Scenario	Conditions	EBLT	EBTH	EBRT	APPROACH	WBLT	WBTH	WBRT	APPROACH	NBLT	NBTH	NBRT	APPROACH	SBLT	SBTH	SBRT	APPROACH	TOTAL
Avery Rd / Muirfield Dr																				
AM	2014	Full Build	Two-way Stop	B/13.8														D/33.4	D/33.4	
	2024	Full Build	Two-way Stop	F/50.5														F/222.1	F/222.1	
PM	2014	Full Build	Two-way Stop	C/20.5														C/15.4	C/15.4	
	2024	Full Build	Two-way Stop	F/203.4														F/52.9	F/52.9	
Avery Rd / Brand Rd																				
AM	2014	Full Build	Four-way Stop	B/12.01	C/23.27		C/21.80	B/12.23	C/20.94		C/19.42	B/14.29	B/14.92		B/14.66	B/13.13	C/24.62		C/21.88	C/19.81
		Full Build w/o HCSD	Four-way Stop	B/12.27	C/23.58		C/21.90	B/12.34	C/21.20		C/19.71	B/14.32	C/15.18		B/14.83	B/13.21	D/27.24		C/24.01	C/20.66
	2024	Full Build	Four-way Stop	C/15.61	F/121.95		F/105.41	C/15.36	F/107.42		F/92.87	C/21.45	E/36.19		D/30.70	C/21.74	F/182.88		F/140.50	F/98.21
		Full Build w/o HCSD	Four-way Stop	C/15.95	F/120.52		F/103.06	C/15.38	F/106.27		F/91.86	C/21.29	E/37.05		D/31.26	C/21.88	F/202.74		F/156.29	F/103.03
		Full Build	Roundabout - Single Lane	D/38.5	C/31.7	C/32.7	C/33.0	C/21.3	B/15.7	B/16.2	B/16.7	C/25.6	B/19.2	C/20.7	C/21.7	F/74.4	F/68.8	F/70.0	E/70.5	D/38.8
		Full Build w/o HCSD	Roundabout - Single Lane	D/37.8	C/31.0	C/31.9	C/32.3	C/21.5	B/16.0	B/16.5	B/17.0	C/25.8	B/19.4	C/20.9	C/21.9	F/83.1	F/77.5	F/78.7	E/79.2	D/41.9
		Full Build	Roundabout - 2 NB/SB Lanes	C/20.9	B/12.5	B/13.6	B/14.1	B/14.8	A/8.0	A/8.5	A/9.2	B/17.7	A/9.3	B/11.3	B/12.6	B/16.5	A/9.3	B/10.8	B/11.5	B/11.8
		Full Build w/o HCSD	Roundabout - 2 NB/SB Lanes	C/21.2	B/12.8	B/13.9	B/14.5	B/14.8	A/8.0	A/8.6	A/9.2	B/17.7	A/9.4	B/11.3	B/12.7	B/16.6	A/9.3	B/10.8	B/11.5	B/11.9
PM	2014	Full Build	Four-way Stop	B/11.83	C/15.89		C/15.01	B/10.98	C/18.57		C/17.94	B/11.51	C/19.54		C/18.12	B/11.95	C/16.04		C/15.04	C/16.63
		Full Build w/o HCSD	Four-way Stop	B/12.33	C/16.00		C/15.03	B/11.03	C/18.81		C/18.17	B/11.59	C/19.87		C/18.40	B/12.05	C/16.13		C/15.13	C/16.76
	2024	Full Build	Four-way Stop	C/16.49	F/55.07		E/46.38	B/13.71	F/142.80		F/133.46	C/16.57	F/155.11		F/129.17	C/19.45	F/85.92		F/67.40	F/96.28
		Full Build w/o HCSD	Four-way Stop	C/17.60	F/55.91		E/46.07	B/13.75	F/144.44		F/134.98	C/16.62	F/156.50		F/130.30	C/19.51	F/84.61		F/66.38	F/96.16
		Full Build	Roundabout - Single Lane	C/21.1	B/14.5	B/15.6	B/16.2	C/31.1	C/25.5	C/26.0	C/26.2	C/26.0	B/19.6	C/20.7	C/20.9	B/18.1	B/12.6	B/13.8	B/14.3	B/19.4
		Full Build w/o HCSD	Roundabout - Single Lane	C/21.7	B/15.1	B/16.2	B/17.0	C/34.3	C/28.7	C/29.2	C/29.4	C/27.5	C/21.1	C/22.2	C/22.4	B/18.0	B/12.5	B/13.7	B/14.2	C/20.8
		Full Build	Roundabout - 2 NB/SB Lanes	B/17.3	A/9.1	B/10.3	B/11.1	B/15.3	A/8.5	A/9.0	A/9.2	B/16.7	A/8.5	A/10.0	B/10.2	B/14.7	A/7.6	A/9.3	A/9.8	B/10.1
		Full Build w/o HCSD	Roundabout - 2 NB/SB Lanes	B/17.5	A/9.3	B/10.5	B/11.6	B/15.5	A/8.7	A/9.3	A/9.5	B/16.9	A/8.7	B/10.1	B/10.3	B/14.7	A/7.6	A/9.3	A/9.8	B/10.3

X/X = Overall LOS / Average Delay Per Vehicle

Time Period	Year	Scenario	Conditions	EBLT	EBTH	EBRT	APPROACH	WBLT	WBTH	WBRT	APPROACH	NBLT	NBTH	NBRT	APPROACH	SBLT	SBTH	SBRT	APPROACH	TOTAL
Avery Rd / Memorial Dr																				
AM	2014	Full Build	Two-way Stop						B/12.5		B/12.5					A/7.8				
		Full Build w/o HCSD	Two-way Stop						B/12.9		B/12.9					A/7.8				
	2024	Full Build	Two-way Stop						C/19.3		C/19.3					A/8.3				
		Full Build w/o HCSD	Two-way Stop						C/20.1		C/20.1					A/8.4				
PM	2014	Full Build	Two-way Stop						C/16.3		C/16.3					A/8.5				
		Full Build w/o HCSD	Two-way Stop						C/16.6		C/16.6					A/8.6				
	2024	Full Build	Two-way Stop						D/33.8		D/33.8					A/9.6				
		Full Build w/o HCSD	Two-way Stop						D/34.9		D/34.9					A/9.7				
Avery Rd / Site Dr																				
AM	2014	Full Build	Two-way Stop		B/13.2		B/13.2					A/8.0								
		Full Build w/o HCSD	Two-way Stop		B/14.2		B/14.2					A/8.0								
	2024	Full Build	Two-way Stop		C/22.0		C/22.0					A/8.6								
		Full Build w/o HCSD	Two-way Stop		D/26.1		D/26.1					A/8.7								
		Full Build w/o HCSD	Two-way Stop w/ Warranted SBRT		C/24.5		C/24.5					A/8.7								
PM	2014	Full Build	Two-way Stop		C/15.7		C/15.7					A/8.3								
		Full Build w/o HCSD	Two-way Stop		C/17.3		C/17.3					A/8.4								
	2024	Full Build	Two-way Stop		D/31.5		D/31.5					A/9.1								
		Full Build w/o HCSD	Two-way Stop		E/38.7		E/38.7					A/9.3								
		Full Build w/o HCSD	Two-way Stop w/ Warranted SBRT		E/36.5		E/36.5					A/9.3								

X/X = Overall LOS / Average Delay Per Vehicle

Time Period	Year	Scenario	Conditions	EBLT	EBTH	EBRT	APPROACH	WBLT	WBTH	WBRT	APPROACH	NBLT	NBTH	NBRT	APPROACH	SBLT	SBTH	SBRT	APPROACH	TOTAL
Avery Rd / Glick Rd																				
AM	2014	Full Build	Roundabout	B/16.8	B/10.6	B/11.6	B/11.9	B/11.0	A/5.6	A/6.0	A/8.8	B/14.6	A/8.3	A/9.5	A/9.2	B/14.6	A/9.0	A/10.0	B/11.6	A/9.9
		Full Build w/o HCSD	Roundabout	B/16.9	B/10.7	B/11.7	B/12.0	B/11.0	A/5.7	A/6.0	A/8.9	B/14.6	A/8.3	A/9.5	A/9.2	B/14.6	A/9.0	A/10.0	B/11.5	A/9.9
	2024	Full Build	Roundabout	C/22.8	B/16.6	B/17.6	B/17.9	B/14.1	A/8.7	A/9.1	B/11.6	B/16.5	B/10.2	B/11.4	B/10.8	C/21.3	B/15.7	B/16.7	B/18.3	B/14.0
		Full Build w/o HCSD	Roundabout	C/23.0	B/16.8	B/17.8	B/18.2	B/14.6	A/9.2	A/9.6	B/12.1	B/16.6	B/10.3	B/11.5	B/10.9	C/21.9	B/16.3	B/17.3	B/18.9	B/14.4
PM	2014	Full Build	Roundabout	B/16.7	B/10.5	B/11.5	B/11.6	B/11.3	A/5.9	A/6.3	A/9.0	B/14.8	A/8.5	A/9.7	A/9.5	B/14.5	A/8.9	B/10.1	B/11.6	B/10.1
		Full Build w/o HCSD	Roundabout	B/16.8	B/10.5	B/11.6	B/11.7	B/11.3	A/5.9	A/6.3	A/9.1	B/14.8	A/8.5	A/9.7	A/9.4	B/14.5	A/8.9	B/10.1	B/11.5	B/10.1
	2024	Full Build	Roundabout	C/22.6	B/16.3	B/17.4	B/17.5	B/16.2	B/10.8	B/11.2	B/13.4	C/20.3	B/14.0	B/15.2	B/14.7	C/21.7	B/16.1	B/17.3	B/18.8	B/15.9
		Full Build w/o HCSD	Roundabout	C/22.7	B/16.5	B/17.5	B/17.6	B/16.4	B/11.0	B/11.4	B/13.6	C/20.4	B/14.1	B/15.3	B/14.8	C/22.1	B/16.5	B/17.7	B/19.2	B/16.1
Jerome Rd / McKitrick Rd																				
AM	2014	Full Build	Two-way Stop		B/11.7		B/11.7					A/7.9								
		Full Build w/o HCSD	Two-way Stop		B/11.7		B/11.7					A/7.9								
	2024	Full Build	Two-way Stop		D/25.2		D/25.2					A/9.1								
		Full Build w/o HCSD	Two-way Stop		C/24.8		C/24.8					A/9.1								
		Full Build	Three-way Stop		B/10.96		B/10.96						C/16.99		C/16.99		D/26.85		D/26.85	C/21.53
		Full Build w/o HCSD	Three-way Stop		B/10.86		B/10.86						C/17.23		C/17.23		D/26.49		D/26.49	C/21.43
		Full Build	Roundabout	B/16.2		B/10.7	B/13.8					B/14.0	A/7.5		A/8.6		A/7.6	A/8.7	A/7.8	A/8.8
		Full Build w/o HCSD	Roundabout	B/16.2		B/10.8	B/13.7					B/13.9	A/7.5		A/8.6		A/7.7	A/8.8	A/7.9	A/8.8
PM	2014	Full Build	Two-way Stop		B/11.9		B/11.9					A/7.7								
		Full Build w/o HCSD	Two-way Stop		B/11.9		B/11.9					A/7.7								
	2024	Full Build	Two-way Stop		E/40.4		E/40.4					A/8.8								
		Full Build w/o HCSD	Two-way Stop		E/39.5		E/39.5					A/8.8								
		Full Build	Three-way Stop		B/13.42		B/13.42						D/32.26		D/32.26		D/27.56		D/27.56	D/27.27
		Full Build w/o HCSD	Three-way Stop		B/13.44		B/13.44						D/32.74		D/32.74		D/27.73		D/27.73	D/27.55
		Full Build	Roundabout	B/16.5		B/11.1	B/13.7					B/14.2	A/7.8		A/8.8		A/7.7	A/8.8	A/7.9	A/9.2
		Full Build w/o HCSD	Roundabout	B/16.5		B/11.1	B/13.6					B/14.2	A/7.8		A/8.7		A/7.7	A/8.8	A/7.8	A/9.2

X/X = Overall LOS / Average Delay Per Vehicle

HYLAND-CROY ROAD / McKITRICK ROAD

TWO-WAY STOP CONTROL SUMMARY

General Information		Site Information	
Analyst	JMH	Intersection	Hyland-Croy/McKitrick
Agency/Co.	EMHT	Jurisdiction	Dublin
Date Performed	10/13/2014	Analysis Year	2014 Full Build - SCHOOL
Analysis Time Period	AM Peak		

Project Description 20131358	
East/West Street: McKitrick Rd	North/South Street: Hyland-Croy Rd
Intersection Orientation: North-South	Study Period (hrs): 0.25

Vehicle Volumes and Adjustments

Major Street	Northbound			Southbound		
Movement	1	2	3	4	5	6
	L	T	R	L	T	R
Volume (veh/h)	14	127	47	4	133	1
Peak-Hour Factor, PHF	0.90	0.90	0.90	0.90	0.90	0.90
Hourly Flow Rate, HFR (veh/h)	15	141	52	4	147	1
Percent Heavy Vehicles	2	--	--	1	--	--
Median Type	Undivided					
RT Channelized			0			0
Lanes	0	1	0	0	1	0
Configuration	LTR			LTR		
Upstream Signal		0			0	

Minor Street	Eastbound			Westbound		
Movement	7	8	9	10	11	12
	L	T	R	L	T	R
Volume (veh/h)	7	36	21	96	38	5
Peak-Hour Factor, PHF	0.90	0.90	0.90	0.90	0.90	0.90
Hourly Flow Rate, HFR (veh/h)	7	40	23	106	42	5
Percent Heavy Vehicles	0	0	0	0	0	0
Percent Grade (%)		0			0	
Flared Approach		N			N	
Storage		0			0	
RT Channelized			0			0
Lanes	0	1	0	0	1	0
Configuration		LTR			LTR	

Delay, Queue Length, and Level of Service

Approach	Northbound	Southbound	Westbound			Eastbound		
Movement	1	4	7	8	9	10	11	12
Lane Configuration	LTR	LTR		LTR			LTR	
v (veh/h)	15	4		153			70	
C (m) (veh/h)	1434	1386		544			629	
v/c	0.01	0.00		0.28			0.11	
95% queue length	0.03	0.01		1.15			0.37	
Control Delay (s/veh)	7.5	7.6		14.2			11.4	
LOS	A	A		B			B	
Approach Delay (s/veh)	--	--	14.2			11.4		
Approach LOS	--	--	B			B		

Copyright © 2007 University of Florida, All Rights Reserved

HCS+™ Version 5.3

Generated: 10/15/2014 10:31 AM

TWO-WAY STOP CONTROL SUMMARY

General Information

Analyst	JMH
Agency/Co.	EMHT
Date Performed	10/13/2014
Analysis Time Period	AM Peak

Site Information

Intersection	Hyland-Croy/McKitrick
Jurisdiction	Dublin
Analysis Year	2014 FB w/o HCSD - SCHOOL

Project Description 20131358

East/West Street: McKitrick Rd | North/South Street: Hyland-Croy Rd

Intersection Orientation: North-South | Study Period (hrs): 0.25

Vehicle Volumes and Adjustments

Major Street	Northbound			Southbound		
Movement	1	2	3	4	5	6
	L	T	R	L	T	R
Volume (veh/h)	10	125	40	5	132	1
Peak-Hour Factor, PHF	0.90	0.90	0.90	0.90	0.90	0.90
Hourly Flow Rate, HFR (veh/h)	11	138	44	5	146	1
Percent Heavy Vehicles	2	--	--	1	--	--
Median Type	Undivided					
RT Channelized			0			0
Lanes	0	1	0	0	1	0
Configuration	LTR			LTR		
Upstream Signal		0			0	

Minor Street	Eastbound			Westbound		
Movement	7	8	9	10	11	12
	L	T	R	L	T	R
Volume (veh/h)	7	37	20	86	41	8
Peak-Hour Factor, PHF	0.90	0.90	0.90	0.90	0.90	0.90
Hourly Flow Rate, HFR (veh/h)	7	41	22	95	45	8
Percent Heavy Vehicles	0	0	0	0	0	0
Percent Grade (%)		0			0	
Flared Approach		N			N	
Storage		0			0	
RT Channelized			0			0
Lanes	0	1	0	0	1	0
Configuration		LTR			LTR	

Delay, Queue Length, and Level of Service

Approach	Northbound	Southbound	Westbound			Eastbound		
Movement	1	4	7	8	9	10	11	12
Lane Configuration	LTR	LTR		LTR			LTR	
v (veh/h)	11	5		148			70	
C (m) (veh/h)	1435	1399		563			637	
v/c	0.01	0.00		0.26			0.11	
95% queue length	0.02	0.01		1.05			0.37	
Control Delay (s/veh)	7.5	7.6		13.7			11.3	
LOS	A	A		B			B	
Approach Delay (s/veh)	--	--	13.7			11.3		
Approach LOS	--	--	B			B		

Copyright © 2007 University of Florida, All Rights Reserved

HCS+™ Version 5.3

Generated: 10/15/2014 2:41 PM

ALL-WAY STOP CONTROL ANALYSIS

General Information

Analyst	JMH
Agency/Co.	EMHT
Date Performed	10/13/2014
Analysis Time Period	AM Peak

Site Information

Intersection	Hyland-Croy/McKitrick
Jurisdiction	Dublin
Analysis Year	2014 Full Build - SCHOOL

Project ID

East/West Street: McKitrick Rd

North/South Street: Hyland-Croy Rd

Volume Adjustments and Site Characteristics

Approach	Eastbound			Westbound		
Movement	L	T	R	L	T	R
Volume (veh/h)	7	36	21	96	38	5
%Thrus Left Lane						

Approach	Northbound			Southbound		
Movement	L	T	R	L	T	R
Volume (veh/h)	14	127	47	4	133	1
%Thrus Left Lane						

	Eastbound		Westbound		Northbound		Southbound	
	L1	L2	L1	L2	L1	L2	L1	L2
Configuration	LTR		LTR		LTR		LTR	
PHF	0.90		0.90		0.90		0.90	
Flow Rate (veh/h)	70		153		208		152	
% Heavy Vehicles	0		0		2		1	
No. Lanes	1		1		1		1	
Geometry Group	1		1		1		1	
Duration, T	0.25							

Saturation Headway Adjustment Worksheet

Prop. Left-Turns	0.1		0.7		0.1		0.0	
Prop. Right-Turns	0.3		0.0		0.3		0.0	
Prop. Heavy Vehicle	0.0		0.0		0.0		0.0	
hLT-adj	0.2	0.2	0.2	0.2	0.2	0.2	0.2	0.2
hRT-adj	-0.6	-0.6	-0.6	-0.6	-0.6	-0.6	-0.6	-0.6
hHV-adj	1.7	1.7	1.7	1.7	1.7	1.7	1.7	1.7
hadj, computed	-0.2		0.1		-0.1		0.0	

Departure Headway and Service Time

hd, initial value (s)	3.20		3.20		3.20		3.20	
x, initial	0.06		0.14		0.18		0.14	
hd, final value (s)	4.82		4.99		4.57		4.76	
x, final value	0.09		0.21		0.26		0.20	
Move-up time, m (s)	2.0		2.0		2.0		2.0	
Service Time, t_s (s)	2.8		3.0		2.6		2.8	

Capacity and Level of Service

	Eastbound		Westbound		Northbound		Southbound	
	L1	L2	L1	L2	L1	L2	L1	L2
Capacity (veh/h)	320		403		458		402	
Delay (s/veh)	8.31		9.32		9.21		8.95	
LOS	A		A		A		A	
Approach: Delay (s/veh)	8.31		9.32		9.21		8.95	
LOS	A		A		A		A	
Intersection Delay (s/veh)	9.06							
Intersection LOS	A							

Copyright © 2007 University of Florida, All Rights Reserved HCS+™ Version 5.3 Generated: 10/15/2014 10:25 AM

ALL-WAY STOP CONTROL ANALYSIS

General Information

Analyst	JMH
Agency/Co.	EMHT
Date Performed	10/13/2014
Analysis Time Period	AM Peak

Site Information

Intersection	Hyland-Croy/McKitrick
Jurisdiction	Dublin
Analysis Year	2014 FB w/o HCSD - SCHOOL

Project ID 20131358 Riviera TIS

East/West Street: McKitrick Rd

North/South Street: Hyland-Croy Rd

Volume Adjustments and Site Characteristics

Approach	Eastbound			Westbound		
Movement	L	T	R	L	T	R
Volume (veh/h)	7	37	20	86	41	8
%Thrus Left Lane						

Approach	Northbound			Southbound		
Movement	L	T	R	L	T	R
Volume (veh/h)	10	125	40	5	132	1
%Thrus Left Lane						

	Eastbound		Westbound		Northbound		Southbound	
	L1	L2	L1	L2	L1	L2	L1	L2
Configuration	LTR		LTR		LTR		LTR	
PHF	0.90		0.90		0.90		0.90	
Flow Rate (veh/h)	70		148		193		152	
% Heavy Vehicles	0		0		2		1	
No. Lanes	1		1		1		1	
Geometry Group	1		1		1		1	
Duration, T	0.25							

Saturation Headway Adjustment Worksheet

Prop. Left-Turns	0.1		0.6		0.1		0.0	
Prop. Right-Turns	0.3		0.1		0.2		0.0	
Prop. Heavy Vehicle	0.0		0.0		0.0		0.0	
hLT-adj	0.2	0.2	0.2	0.2	0.2	0.2	0.2	0.2
hRT-adj	-0.6	-0.6	-0.6	-0.6	-0.6	-0.6	-0.6	-0.6
hHV-adj	1.7	1.7	1.7	1.7	1.7	1.7	1.7	1.7
hadj, computed	-0.2		0.1		-0.1		0.0	

Departure Headway and Service Time

hd, initial value (s)	3.20		3.20		3.20		3.20	
x, initial	0.06		0.13		0.17		0.14	
hd, final value (s)	4.77		4.92		4.56		4.72	
x, final value	0.09		0.20		0.24		0.20	
Move-up time, m (s)	2.0		2.0		2.0		2.0	
Service Time, t_s (s)	2.8		2.9		2.6		2.7	

Capacity and Level of Service

	Eastbound		Westbound		Northbound		Southbound	
	L1	L2	L1	L2	L1	L2	L1	L2
Capacity (veh/h)	320		398		443		402	
Delay (s/veh)	8.26		9.17		9.03		8.89	
LOS	A		A		A		A	
Approach: Delay (s/veh)	8.26		9.17		9.03		8.89	
LOS	A		A		A		A	
Intersection Delay (s/veh)	8.93							
Intersection LOS	A							

Copyright © 2007 University of Florida, All Rights Reserved

HCS+™ Version 5.3

Generated: 10/15/2014 2:36 PM

TWO-WAY STOP CONTROL SUMMARY

General Information		Site Information	
Analyst	JMH	Intersection	Hyland-Croy/McKitrick
Agency/Co.	EMHT	Jurisdiction	Dublin
Date Performed	10/13/2014	Analysis Year	2024 Full Build - SCHOOL
Analysis Time Period	AM Peak		

Project Description 20131358	
East/West Street: McKitrick Rd	North/South Street: Hyland-Croy Rd
Intersection Orientation: North-South	Study Period (hrs): 0.25

Vehicle Volumes and Adjustments

Major Street	Northbound			Southbound		
Movement	1	2	3	4	5	6
	L	T	R	L	T	R
Volume (veh/h)	17	333	74	6	518	30
Peak-Hour Factor, PHF	0.90	0.90	0.90	0.90	0.90	0.90
Hourly Flow Rate, HFR (veh/h)	18	370	82	6	575	33
Percent Heavy Vehicles	2	--	--	1	--	--
Median Type	Undivided					
RT Channelized			0			0
Lanes	0	1	0	0	1	0
Configuration	LTR			LTR		
Upstream Signal		0			0	

Minor Street	Eastbound			Westbound		
Movement	7	8	9	10	11	12
	L	T	R	L	T	R
Volume (veh/h)	44	56	27	144	60	7
Peak-Hour Factor, PHF	0.90	0.90	0.90	0.90	0.90	0.90
Hourly Flow Rate, HFR (veh/h)	48	62	30	160	66	7
Percent Heavy Vehicles	0	0	0	0	0	0
Percent Grade (%)		0			0	
Flared Approach		N			N	
Storage		0			0	
RT Channelized			0			0
Lanes	0	1	0	0	1	0
Configuration		LTR			LTR	

Delay, Queue Length, and Level of Service

Approach	Northbound	Southbound	Westbound			Eastbound		
Movement	1	4	7	8	9	10	11	12
Lane Configuration	LTR	LTR		LTR			LTR	
v (veh/h)	18	6		233			140	
C (m) (veh/h)	970	1114		156			203	
v/c	0.02	0.01		1.49			0.69	
95% queue length	0.06	0.02		15.33			4.31	
Control Delay (s/veh)	8.8	8.2		306.0			54.8	
LOS	A	A		F			F	
Approach Delay (s/veh)	--	--	306.0			54.8		
Approach LOS	--	--	F			F		

Copyright © 2007 University of Florida, All Rights Reserved

HCS+™ Version 5.3

Generated: 10/16/2014 8:17 AM

TWO-WAY STOP CONTROL SUMMARY

General Information

Analyst	JMH
Agency/Co.	EMHT
Date Performed	10/13/2014
Analysis Time Period	AM Peak

Site Information

Intersection	Hyland-Croy/McKitrick
Jurisdiction	Dublin
Analysis Year	2024 FB w/o HCSD - SCHOOL

Project Description 20131358

East/West Street: McKitrick Rd | North/South Street: Hyland-Croy Rd

Intersection Orientation: North-South | Study Period (hrs): 0.25

Vehicle Volumes and Adjustments

Major Street	Northbound			Southbound		
Movement	1	2	3	4	5	6
	L	T	R	L	T	R
Volume (veh/h)	13	331	67	7	517	30
Peak-Hour Factor, PHF	0.90	0.90	0.90	0.90	0.90	0.90
Hourly Flow Rate, HFR (veh/h)	14	367	74	7	574	33
Percent Heavy Vehicles	2	--	--	1	--	--
Median Type	Undivided					
RT Channelized			0			0
Lanes	0	1	0	0	1	0
Configuration	LTR			LTR		
Upstream Signal		0			0	

Minor Street	Eastbound			Westbound		
Movement	7	8	9	10	11	12
	L	T	R	L	T	R
Volume (veh/h)	44	57	26	134	63	10
Peak-Hour Factor, PHF	0.90	0.90	0.90	0.90	0.90	0.90
Hourly Flow Rate, HFR (veh/h)	48	63	28	148	70	11
Percent Heavy Vehicles	0	0	0	0	0	0
Percent Grade (%)		0			0	
Flared Approach		N			N	
Storage		0			0	
RT Channelized			0			0
Lanes	0	1	0	0	1	0
Configuration		LTR			LTR	

Delay, Queue Length, and Level of Service

Approach	Northbound	Southbound	Westbound			Eastbound		
Movement	1	4	7	8	9	10	11	12
Lane Configuration	LTR	LTR		LTR			LTR	
v (veh/h)	14	7		229			139	
C (m) (veh/h)	971	1124		166			205	
v/c	0.01	0.01		1.38			0.68	
95% queue length	0.04	0.02		14.01			4.19	
Control Delay (s/veh)	8.8	8.2		256.1			53.1	
LOS	A	A		F			F	
Approach Delay (s/veh)	--	--	256.1			53.1		
Approach LOS	--	--	F			F		

Copyright © 2007 University of Florida, All Rights Reserved

HCS+™ Version 5.3

Generated: 10/15/2014 2:54 PM

ALL-WAY STOP CONTROL ANALYSIS

General Information

Analyst	JMH
Agency/Co.	EMHT
Date Performed	10/13/2014
Analysis Time Period	AM Peak

Site Information

Intersection	Hyland-Croy/McKitrick
Jurisdiction	Dublin
Analysis Year	2024 Full Build - SCHOOL

Project ID 20131358 Riviera TIS

East/West Street: McKitrick Rd

North/South Street: Hyland-Croy Rd

Volume Adjustments and Site Characteristics

Approach	Eastbound			Westbound		
Movement	L	T	R	L	T	R
Volume (veh/h)	44	56	27	144	60	7
%Thrus Left Lane						

Approach	Northbound			Southbound		
Movement	L	T	R	L	T	R
Volume (veh/h)	17	333	74	6	518	30
%Thrus Left Lane						

	Eastbound		Westbound		Northbound		Southbound	
	L1	L2	L1	L2	L1	L2	L1	L2
Configuration	LTR		LTR		LTR		LTR	
PHF	0.90		0.90		0.90		0.90	
Flow Rate (veh/h)	140		233		470		614	
% Heavy Vehicles	0		0		2		1	
No. Lanes	1		1		1		1	
Geometry Group	1		1		1		1	
Duration, T	0.25							

Saturation Headway Adjustment Worksheet

Prop. Left-Turns	0.3		0.7		0.0		0.0	
Prop. Right-Turns	0.2		0.0		0.2		0.1	
Prop. Heavy Vehicle	0.0		0.0		0.0		0.0	
hLT-adj	0.2	0.2	0.2	0.2	0.2	0.2	0.2	0.2
hRT-adj	-0.6	-0.6	-0.6	-0.6	-0.6	-0.6	-0.6	-0.6
hHV-adj	1.7	1.7	1.7	1.7	1.7	1.7	1.7	1.7
hadj, computed	-0.1		0.1		-0.1		-0.0	

Departure Headway and Service Time

hd, initial value (s)	3.20		3.20		3.20		3.20	
x, initial	0.12		0.21		0.42		0.55	
hd, final value (s)	8.18		7.88		6.69		6.57	
x, final value	0.32		0.51		0.87		1.12	
Move-up time, m (s)	2.0		2.0		2.0		2.0	
Service Time, t_s (s)	6.2		5.9		4.7		4.6	

Capacity and Level of Service

	Eastbound		Westbound		Northbound		Southbound	
	L1	L2	L1	L2	L1	L2	L1	L2
Capacity (veh/h)	390		436		533		614	
Delay (s/veh)	14.94		18.80		39.86		100.19	
LOS	B		C		E		F	
Approach: Delay (s/veh)	14.94		18.80		39.86		100.19	
LOS	B		C		E		F	
Intersection Delay (s/veh)	59.52							
Intersection LOS	F							

Copyright © 2007 University of Florida, All Rights Reserved

HCS+™ Version 5.3

Generated: 10/16/2014 8:15 AM

ALL-WAY STOP CONTROL ANALYSIS

General Information

Analyst	JMH
Agency/Co.	EMHT
Date Performed	10/13/2014
Analysis Time Period	AM Peak

Site Information

Intersection	Hyland-Croy/McKitrick
Jurisdiction	Dublin
Analysis Year	2024 FB w/o HCSD - SCHOOL

Project ID 20131358 Riviera TIS

East/West Street: McKitrick Rd

North/South Street: Hyland-Croy Rd

Volume Adjustments and Site Characteristics

Approach	Eastbound			Westbound		
Movement	L	T	R	L	T	R
Volume (veh/h)	44	57	26	134	63	10
%Thrus Left Lane						

Approach	Northbound			Southbound		
Movement	L	T	R	L	T	R
Volume (veh/h)	13	331	67	7	517	30
%Thrus Left Lane						

	Eastbound		Westbound		Northbound		Southbound	
	L1	L2	L1	L2	L1	L2	L1	L2
Configuration	LTR		LTR		LTR		LTR	
PHF	0.90		0.90		0.90		0.90	
Flow Rate (veh/h)	139		229		455		614	
% Heavy Vehicles	0		0		2		1	
No. Lanes	1		1		1		1	
Geometry Group	1		1		1		1	
Duration, T	0.25							

Saturation Headway Adjustment Worksheet

Prop. Left-Turns	0.3		0.6		0.0		0.0	
Prop. Right-Turns	0.2		0.0		0.2		0.1	
Prop. Heavy Vehicle	0.0		0.0		0.0		0.0	
hLT-adj	0.2	0.2	0.2	0.2	0.2	0.2	0.2	0.2
hRT-adj	-0.6	-0.6	-0.6	-0.6	-0.6	-0.6	-0.6	-0.6
hHV-adj	1.7	1.7	1.7	1.7	1.7	1.7	1.7	1.7
hadj, computed	-0.1		0.1		-0.1		-0.0	

Departure Headway and Service Time

hd, initial value (s)	3.20		3.20		3.20		3.20	
x, initial	0.12		0.20		0.40		0.55	
hd, final value (s)	8.08		7.79		6.64		6.47	
x, final value	0.31		0.50		0.84		1.10	
Move-up time, m (s)	2.0		2.0		2.0		2.0	
Service Time, t_s (s)	6.1		5.8		4.6		4.5	

Capacity and Level of Service

	Eastbound		Westbound		Northbound		Southbound	
	L1	L2	L1	L2	L1	L2	L1	L2
Capacity (veh/h)	389		437		535		614	
Delay (s/veh)	14.70		18.19		35.32		94.28	
LOS	B		C		E		F	
Approach: Delay (s/veh)	14.70		18.19		35.32		94.28	
LOS	B		C		E		F	
Intersection Delay (s/veh)	55.79							
Intersection LOS	F							

Copyright © 2007 University of Florida, All Rights Reserved HCS+™ Version 5.3 Generated: 10/15/2014 2:50 PM

MOVEMENT SUMMARY

Site: 2024 AM Full Build w/ HCSD

Roundabout with 1-lane approaches and circulating road

Roundabout

Movement Performance - Vehicles											
Mov ID	Turn	Demand Flow veh/h	HV %	Deg. Satn v/c	Average Delay sec	Level of Service	95% Back of Queue Vehicles veh	95% Back of Queue Distance ft	Prop. Queued	Effective Stop Rate per veh	Average Speed mph
South: Hyland-Croy Rd											
3L	L	19	0.0	0.412	14.3	LOS B	2.6	66.7	0.36	0.82	31.8
8T	T	370	2.5	0.412	7.9	LOS A	2.6	66.7	0.36	0.54	34.6
8R	R	82	0.0	0.412	9.0	LOS A	2.6	66.7	0.36	0.61	34.2
Approach		471	2.0	0.412	8.4	LOS A	2.6	66.7	0.36	0.56	34.4
East: McKitrick Rd											
1L	L	160	0.0	0.284	13.0	LOS B	1.4	36.1	0.56	0.82	26.6
6T	T	67	0.0	0.284	7.4	LOS A	1.4	36.1	0.56	0.65	28.8
6R	R	8	0.0	0.284	8.0	LOS A	1.4	36.1	0.56	0.69	28.3
Approach		234	0.0	0.284	11.2	LOS B	1.4	36.1	0.56	0.77	27.2
North: Hyland-Croy Rd											
7L	L	7	0.0	0.612	15.1	LOS B	4.9	124.3	0.63	0.86	30.9
4T	T	576	1.5	0.612	9.5	LOS A	4.9	124.3	0.63	0.69	33.4
4R	R	33	0.0	0.612	10.6	LOS B	4.9	124.3	0.63	0.73	33.3
Approach		616	1.4	0.612	9.6	LOS A	4.9	124.3	0.63	0.70	33.3
West: McKitrick Rd											
5L	L	49	0.0	0.233	18.4	LOS B	1.3	32.0	0.73	0.93	29.4
2T	T	62	0.0	0.233	12.0	LOS B	1.3	32.0	0.73	0.82	32.2
2R	R	30	0.0	0.233	13.1	LOS B	1.3	32.0	0.73	0.85	31.9
Approach		141	0.0	0.233	14.4	LOS B	1.3	32.0	0.73	0.86	31.1
All Vehicles		1462	1.2	0.612	10.0	LOS A	4.9	124.3	0.54	0.68	32.3

Level of Service (LOS) Method: Delay & v/c (HCM 2010).
Roundabout LOS Method: Same as Signalised Intersections.
Vehicle movement LOS values are based on average delay and v/c ratio (degree of saturation) per movement
LOS F will result if v/c > 1 irrespective of movement delay value (does not apply for approaches and intersection).
Intersection and Approach LOS values are based on average delay for all movements (v/c not used as specified in HCM 2010).
Roundabout Capacity Model: SIDRA Standard.
SIDRA Standard Delay Model used.

Copyright © 2000-2011 Akcelik and Associates Pty Ltd
www.sidrasolutions.com

MOVEMENT SUMMARY

Site: 2024 AM Full Build w/o HCSD

Roundabout with 1-lane approaches and circulating road

Roundabout

Movement Performance - Vehicles

Mov ID	Turn	Demand Flow veh/h	HV %	Deg. Satn v/c	Average Delay sec	Level of Service	95% Back of Queue Vehicles veh	95% Back of Queue Distance ft	Prop. Queued	Effective Stop Rate per veh	Average Speed mph
South: Hyland-Croy Rd											
3L	L	14	0.0	0.401	14.3	LOS B	2.5	63.9	0.36	0.82	31.8
8T	T	368	2.5	0.401	7.9	LOS A	2.5	63.9	0.36	0.54	34.7
8R	R	74	0.0	0.401	9.0	LOS A	2.5	63.9	0.36	0.61	34.2
Approach		457	2.0	0.401	8.3	LOS A	2.5	63.9	0.36	0.56	34.5
East: McKitrick Rd											
1L	L	149	0.0	0.277	12.9	LOS B	1.4	35.0	0.56	0.82	26.6
6T	T	70	0.0	0.277	7.4	LOS A	1.4	35.0	0.56	0.64	28.9
6R	R	11	0.0	0.277	7.9	LOS A	1.4	35.0	0.56	0.69	28.4
Approach		230	0.0	0.277	11.0	LOS B	1.4	35.0	0.56	0.76	27.3
North: Hyland-Croy Rd											
7L	L	8	0.0	0.604	14.8	LOS B	4.7	119.1	0.61	0.85	31.0
4T	T	574	1.5	0.604	9.3	LOS A	4.7	119.1	0.61	0.67	33.4
4R	R	33	0.0	0.604	10.3	LOS B	4.7	119.1	0.61	0.72	33.4
Approach		616	1.4	0.604	9.4	LOS A	4.7	119.1	0.61	0.68	33.4
West: McKitrick Rd											
5L	L	49	0.0	0.229	18.3	LOS B	1.3	31.4	0.72	0.92	29.5
2T	T	63	0.0	0.229	11.9	LOS B	1.3	31.4	0.72	0.82	32.3
2R	R	29	0.0	0.229	13.0	LOS B	1.3	31.4	0.72	0.85	31.9
Approach		141	0.0	0.229	14.3	LOS B	1.3	31.4	0.72	0.86	31.2
All Vehicles		1443	1.2	0.604	9.8	LOS A	4.7	119.1	0.53	0.67	32.4

Level of Service (LOS) Method: Delay & v/c (HCM 2010).
Roundabout LOS Method: Same as Signalised Intersections.
Vehicle movement LOS values are based on average delay and v/c ratio (degree of saturation) per movement
LOS F will result if v/c > 1 irrespective of movement delay value (does not apply for approaches and intersection).
Intersection and Approach LOS values are based on average delay for all movements (v/c not used as specified in HCM 2010).
Roundabout Capacity Model: SIDRA Standard.
SIDRA Standard Delay Model used.

Copyright © 2000-2011 Akcelik and Associates Pty Ltd
www.sidrasolutions.com

TWO-WAY STOP CONTROL SUMMARY

General Information		Site Information	
Analyst	JMH	Intersection	Hyland-Croy/McKitrick
Agency/Co.	EMHT	Jurisdiction	Dublin
Date Performed	10/13/2014	Analysis Year	2014 Full Build - SCHOOL
Analysis Time Period	PM Peak		

Project Description 20131358

East/West Street: McKitrick Rd | North/South Street: Hyland-Croy Rd

Intersection Orientation: North-South | Study Period (hrs): 0.25

Vehicle Volumes and Adjustments

Major Street	Northbound			Southbound		
Movement	1	2	3	4	5	6
	L	T	R	L	T	R
Volume (veh/h)	9	123	50	3	117	9
Peak-Hour Factor, PHF	0.90	0.90	0.90	0.90	0.90	0.90
Hourly Flow Rate, HFR (veh/h)	10	136	55	3	130	10
Percent Heavy Vehicles	1	--	--	1	--	--
Median Type	Undivided					
RT Channelized			0			0
Lanes	0	1	0	0	1	0
Configuration	LTR			LTR		
Upstream Signal		0			0	

Minor Street	Eastbound			Westbound		
Movement	7	8	9	10	11	12
	L	T	R	L	T	R
Volume (veh/h)	9	46	7	41	35	6
Peak-Hour Factor, PHF	0.90	0.90	0.90	0.90	0.90	0.90
Hourly Flow Rate, HFR (veh/h)	10	51	7	45	38	6
Percent Heavy Vehicles	0	2	0	0	1	0
Percent Grade (%)		0			0	
Flared Approach		N			N	
Storage		0			0	
RT Channelized			0			0
Lanes	0	1	0	0	1	0
Configuration		LTR			LTR	

Delay, Queue Length, and Level of Service

Approach	Northbound	Southbound	Westbound			Eastbound		
Movement	1	4	7	8	9	10	11	12
Lane Configuration	LTR	LTR		LTR			LTR	
v (veh/h)	10	3		89			68	
C (m) (veh/h)	1449	1389		582			591	
v/c	0.01	0.00		0.15			0.12	
95% queue length	0.02	0.01		0.54			0.39	
Control Delay (s/veh)	7.5	7.6		12.3			11.9	
LOS	A	A		B			B	
Approach Delay (s/veh)	--	--	12.3			11.9		
Approach LOS	--	--	B			B		

Copyright © 2007 University of Florida, All Rights Reserved

HCS+™ Version 5.3 Generated: 10/15/2014 10:32 AM

TWO-WAY STOP CONTROL SUMMARY

General Information

Analyst	JMH
Agency/Co.	EMHT
Date Performed	10/13/2014
Analysis Time Period	PM Peak

Site Information

Intersection	Hyland-Croy/McKitrick
Jurisdiction	Dublin
Analysis Year	2014 FB w/o HCSD - SCHOOL

Project Description 20131358

East/West Street: McKitrick Rd | North/South Street: Hyland-Croy Rd

Intersection Orientation: North-South | Study Period (hrs): 0.25

Vehicle Volumes and Adjustments

Major Street	Northbound			Southbound		
Movement	1	2	3	4	5	6
	L	T	R	L	T	R
Volume (veh/h)	9	123	47	4	113	9
Peak-Hour Factor, PHF	0.90	0.90	0.90	0.90	0.90	0.90
Hourly Flow Rate, HFR (veh/h)	10	136	52	4	125	10
Percent Heavy Vehicles	1	--	--	1	--	--
Median Type	Undivided					
RT Channelized			0			0
Lanes	0	1	0	0	1	0
Configuration	LTR			LTR		
Upstream Signal		0			0	

Minor Street	Eastbound			Westbound		
Movement	7	8	9	10	11	12
	L	T	R	L	T	R
Volume (veh/h)	9	49	7	38	36	6
Peak-Hour Factor, PHF	0.90	0.90	0.90	0.90	0.90	0.90
Hourly Flow Rate, HFR (veh/h)	10	54	7	42	40	6
Percent Heavy Vehicles	0	2	0	0	1	0
Percent Grade (%)		0			0	
Flared Approach		N			N	
Storage		0			0	
RT Channelized			0			0
Lanes	0	1	0	0	1	0
Configuration		LTR			LTR	

Delay, Queue Length, and Level of Service

Approach	Northbound	Southbound	Westbound			Eastbound		
Movement	1	4	7	8	9	10	11	12
Lane Configuration	LTR	LTR		LTR			LTR	
v (veh/h)	10	4		88			71	
C (m) (veh/h)	1456	1392		585			594	
v/c	0.01	0.00		0.15			0.12	
95% queue length	0.02	0.01		0.53			0.40	
Control Delay (s/veh)	7.5	7.6		12.2			11.9	
LOS	A	A		B			B	
Approach Delay (s/veh)	--	--	12.2			11.9		
Approach LOS	--	--	B			B		

Copyright © 2007 University of Florida, All Rights Reserved HCS+™ Version 5.3 Generated: 10/15/2014 2:42 PM

ALL-WAY STOP CONTROL ANALYSIS

General Information

Analyst	JMH
Agency/Co.	EMHT
Date Performed	10/13/2014
Analysis Time Period	PM Peak

Site Information

Intersection	Hyland-Croy/McKitrick
Jurisdiction	Dublin
Analysis Year	2014 Full Build - SCHOOL

Project ID 20131358 Riviera TIS

East/West Street: McKitrick Rd

North/South Street: Hyland-Croy Rd

Volume Adjustments and Site Characteristics

Approach	Eastbound			Westbound		
Movement	L	T	R	L	T	R
Volume (veh/h)	9	46	7	41	35	6
%Thrus Left Lane						

Approach	Northbound			Southbound		
Movement	L	T	R	L	T	R
Volume (veh/h)	9	123	50	3	117	9
%Thrus Left Lane						

	Eastbound		Westbound		Northbound		Southbound	
	L1	L2	L1	L2	L1	L2	L1	L2
Configuration	LTR		LTR		LTR		LTR	
PHF	0.90		0.90		0.90		0.90	
Flow Rate (veh/h)	68		89		201		143	
% Heavy Vehicles	1		1		1		2	
No. Lanes	1		1		1		1	
Geometry Group	1		1		1		1	
Duration, T	0.25							

Saturation Headway Adjustment Worksheet

Prop. Left-Turns	0.1		0.5		0.0		0.0	
Prop. Right-Turns	0.1		0.1		0.3		0.1	
Prop. Heavy Vehicle	0.0		0.0		0.0		0.0	
hLT-adj	0.2	0.2	0.2	0.2	0.2	0.2	0.2	0.2
hRT-adj	-0.6	-0.6	-0.6	-0.6	-0.6	-0.6	-0.6	-0.6
hHV-adj	1.7	1.7	1.7	1.7	1.7	1.7	1.7	1.7
hadj, computed	-0.0		0.1		-0.1		-0.0	

Departure Headway and Service Time

hd, initial value (s)	3.20		3.20		3.20		3.20	
x, initial	0.06		0.08		0.18		0.13	
hd, final value (s)	4.80		4.86		4.33		4.52	
x, final value	0.09		0.12		0.24		0.18	
Move-up time, m (s)	2.0		2.0		2.0		2.0	
Service Time, t_s (s)	2.8		2.9		2.3		2.5	

Capacity and Level of Service

	Eastbound		Westbound		Northbound		Southbound	
	L1	L2	L1	L2	L1	L2	L1	L2
Capacity (veh/h)	318		339		451		393	
Delay (s/veh)	8.28		8.52		8.70		8.51	
LOS	A		A		A		A	
Approach: Delay (s/veh)	8.28		8.52		8.70		8.51	
LOS	A		A		A		A	
Intersection Delay (s/veh)	8.56							
Intersection LOS	A							

Copyright © 2007 University of Florida, All Rights Reserved HCS+™ Version 5.3 Generated: 10/15/2014 10:28 AM

ALL-WAY STOP CONTROL ANALYSIS

General Information

Analyst	JMH
Agency/Co.	EMHT
Date Performed	10/13/2014
Analysis Time Period	PM Peak

Site Information

Intersection	Hyland-Croy/McKitrick
Jurisdiction	Dublin
Analysis Year	2014 FB w/o HCSD - SCHOOL

Project ID 20131358 Riviera TIS

East/West Street: McKitrick Rd

North/South Street: Hyland-Croy Rd

Volume Adjustments and Site Characteristics

Approach	Eastbound			Westbound		
Movement	L	T	R	L	T	R
Volume (veh/h)	9	49	7	38	36	6
%Thrus Left Lane						

Approach	Northbound			Southbound		
Movement	L	T	R	L	T	R
Volume (veh/h)	9	123	47	4	113	9
%Thrus Left Lane						

	Eastbound		Westbound		Northbound		Southbound	
	L1	L2	L1	L2	L1	L2	L1	L2
Configuration	LTR		LTR		LTR		LTR	
PHF	0.90		0.90		0.90		0.90	
Flow Rate (veh/h)	71		88		198		139	
% Heavy Vehicles	1		1		1		2	
No. Lanes	1		1		1		1	
Geometry Group	1		1		1		1	
Duration, T	0.25							

Saturation Headway Adjustment Worksheet

Prop. Left-Turns	0.1		0.5		0.1		0.0	
Prop. Right-Turns	0.1		0.1		0.3		0.1	
Prop. Heavy Vehicle	0.0		0.0		0.0		0.0	
hLT-adj	0.2	0.2	0.2	0.2	0.2	0.2	0.2	0.2
hRT-adj	-0.6	-0.6	-0.6	-0.6	-0.6	-0.6	-0.6	-0.6
hHV-adj	1.7	1.7	1.7	1.7	1.7	1.7	1.7	1.7
hadj, computed	-0.0		0.1		-0.1		-0.0	

Departure Headway and Service Time

hd, initial value (s)	3.20		3.20		3.20		3.20	
x, initial	0.06		0.08		0.18		0.12	
hd, final value (s)	4.78		4.84		4.34		4.52	
x, final value	0.09		0.12		0.24		0.17	
Move-up time, m (s)	2.0		2.0		2.0		2.0	
Service Time, t_s (s)	2.8		2.8		2.3		2.5	

Capacity and Level of Service

	Eastbound		Westbound		Northbound		Southbound	
	L1	L2	L1	L2	L1	L2	L1	L2
Capacity (veh/h)	321		338		448		389	
Delay (s/veh)	8.28		8.49		8.69		8.48	
LOS	A		A		A		A	
Approach: Delay (s/veh)	8.28		8.49		8.69		8.48	
LOS	A		A		A		A	
Intersection Delay (s/veh)	8.54							
Intersection LOS	A							

Copyright © 2007 University of Florida, All Rights Reserved HCS+™ Version 5.3 Generated: 10/15/2014 2:38 PM

TWO-WAY STOP CONTROL SUMMARY

General Information		Site Information	
Analyst	JMH	Intersection	Hyland-Croy/McKitrick
Agency/Co.	EMHT	Jurisdiction	Dublin
Date Performed	10/13/2014	Analysis Year	2024 Full Build - SCHOOL
Analysis Time Period	PM Peak		

Project Description 20131358

East/West Street: McKitrick Rd | North/South Street: Hyland-Croy Rd

Intersection Orientation: North-South | Study Period (hrs): 0.25

Vehicle Volumes and Adjustments

Major Street	Northbound			Southbound		
Movement	1	2	3	4	5	6
	L	T	R	L	T	R
Volume (veh/h)	12	541	89	4	431	33
Peak-Hour Factor, PHF	0.90	0.90	0.90	0.90	0.90	0.90
Hourly Flow Rate, HFR (veh/h)	13	601	98	4	478	36
Percent Heavy Vehicles	1	--	--	1	--	--
Median Type	Undivided					
RT Channelized			0			0
Lanes	0	1	0	0	1	0
Configuration	LTR			LTR		
Upstream Signal		0			0	

Minor Street	Eastbound			Westbound		
Movement	7	8	9	10	11	12
	L	T	R	L	T	R
Volume (veh/h)	35	74	9	74	60	10
Peak-Hour Factor, PHF	0.90	0.90	0.90	0.90	0.90	0.90
Hourly Flow Rate, HFR (veh/h)	38	82	10	82	66	11
Percent Heavy Vehicles	0	2	0	0	1	0
Percent Grade (%)		0			0	
Flared Approach		N			N	
Storage		0			0	
RT Channelized			0			0
Lanes	0	1	0	0	1	0
Configuration		LTR			LTR	

Delay, Queue Length, and Level of Service

Approach	Northbound	Southbound	Westbound			Eastbound		
Movement	1	4	7	8	9	10	11	12
Lane Configuration	LTR	LTR		LTR			LTR	
v (veh/h)	13	4		159			130	
C (m) (veh/h)	1057	902		127			155	
v/c	0.01	0.00		1.25			0.84	
95% queue length	0.04	0.01		9.98			5.59	
Control Delay (s/veh)	8.4	9.0		228.5			92.3	
LOS	A	A		F			F	
Approach Delay (s/veh)	--	--	228.5			92.3		
Approach LOS	--	--	F			F		

Copyright © 2007 University of Florida, All Rights Reserved HCS+™ Version 5.3 Generated: 10/16/2014 8:18 AM

TWO-WAY STOP CONTROL SUMMARY

General Information

Analyst	JMH
Agency/Co.	EMHT
Date Performed	10/13/2014
Analysis Time Period	PM Peak

Site Information

Intersection	Hyland-Croy/McKitrick
Jurisdiction	Dublin
Analysis Year	2024 FB w/o HCSD - SCHOOL

Project Description 20131358

East/West Street: McKitrick Rd | North/South Street: Hyland-Croy Rd

Intersection Orientation: North-South | Study Period (hrs): 0.25

Vehicle Volumes and Adjustments

Major Street	Northbound			Southbound		
Movement	1	2	3	4	5	6
	L	T	R	L	T	R
Volume (veh/h)	12	541	86	5	427	33
Peak-Hour Factor, PHF	0.90	0.90	0.90	0.90	0.90	0.90
Hourly Flow Rate, HFR (veh/h)	13	601	95	5	474	36
Percent Heavy Vehicles	1	--	--	1	--	--
Median Type	Undivided					
RT Channelized			0			0
Lanes	0	1	0	0	1	0
Configuration	LTR			LTR		
Upstream Signal		0			0	

Minor Street	Eastbound			Westbound		
Movement	7	8	9	10	11	12
	L	T	R	L	T	R
Volume (veh/h)	35	77	9	71	61	10
Peak-Hour Factor, PHF	0.90	0.90	0.90	0.90	0.90	0.90
Hourly Flow Rate, HFR (veh/h)	38	85	10	78	67	11
Percent Heavy Vehicles	0	2	0	0	1	0
Percent Grade (%)		0			0	
Flared Approach		N			N	
Storage		0			0	
RT Channelized			0			0
Lanes	0	1	0	0	1	0
Configuration		LTR			LTR	

Delay, Queue Length, and Level of Service

Approach	Northbound	Southbound	Westbound			Eastbound		
Movement	1	4	7	8	9	10	11	12
Lane Configuration	LTR	LTR		LTR			LTR	
v (veh/h)	13	5		156			133	
C (m) (veh/h)	1060	905		127			156	
v/c	0.01	0.01		1.23			0.85	
95% queue length	0.04	0.02		9.67			5.77	
Control Delay (s/veh)	8.4	9.0		220.0			94.7	
LOS	A	A		F			F	
Approach Delay (s/veh)	--	--	220.0			94.7		
Approach LOS	--	--	F			F		

Copyright © 2007 University of Florida, All Rights Reserved HCS+TM Version 5.3 Generated: 10/15/2014 2:55 PM

ALL-WAY STOP CONTROL ANALYSIS

General Information

Analyst	JMH
Agency/Co.	EMHT
Date Performed	10/13/2014
Analysis Time Period	PM Peak

Site Information

Intersection	Hyland-Croy/McKitrick
Jurisdiction	Dublin
Analysis Year	2024 Full Build - SCHOOL

Project ID 20131358 Riviera TIS

East/West Street: McKitrick Rd

North/South Street: Hyland-Croy Rd

Volume Adjustments and Site Characteristics

Approach	Eastbound			Westbound		
Movement	L	T	R	L	T	R
Volume (veh/h)	35	74	9	74	60	10
%Thrus Left Lane						

Approach	Northbound			Southbound		
Movement	L	T	R	L	T	R
Volume (veh/h)	12	541	89	4	431	33
%Thrus Left Lane						

	Eastbound		Westbound		Northbound		Southbound	
	L1	L2	L1	L2	L1	L2	L1	L2
Configuration	LTR		LTR		LTR		LTR	
PHF	0.90		0.90		0.90		0.90	
Flow Rate (veh/h)	130		159		712		518	
% Heavy Vehicles	1		1		1		2	
No. Lanes	1		1		1		1	
Geometry Group	1		1		1		1	
Duration, T	0.25							

Saturation Headway Adjustment Worksheet

Prop. Left-Turns	0.3		0.5		0.0		0.0	
Prop. Right-Turns	0.1		0.1		0.1		0.1	
Prop. Heavy Vehicle	0.0		0.0		0.0		0.0	
hLT-adj	0.2	0.2	0.2	0.2	0.2	0.2	0.2	0.2
hRT-adj	-0.6	-0.6	-0.6	-0.6	-0.6	-0.6	-0.6	-0.6
hHV-adj	1.7	1.7	1.7	1.7	1.7	1.7	1.7	1.7
hadj, computed	0.0		0.1		-0.1		-0.0	

Departure Headway and Service Time

hd, initial value (s)	3.20		3.20		3.20		3.20	
x, initial	0.12		0.14		0.63		0.46	
hd, final value (s)	7.90		7.80		6.08		6.26	
x, final value	0.29		0.34		1.20		0.90	
Move-up time, m (s)	2.0		2.0		2.0		2.0	
Service Time, t_s (s)	5.9		5.8		4.1		4.3	

Capacity and Level of Service

	Eastbound		Westbound		Northbound		Southbound	
	L1	L2	L1	L2	L1	L2	L1	L2
Capacity (veh/h)	380		409		712		572	
Delay (s/veh)	14.03		14.85		127.74		41.92	
LOS	B		B		F		E	
Approach: Delay (s/veh)	14.03		14.85		127.74		41.92	
LOS	B		B		F		E	
Intersection Delay (s/veh)	76.92							
Intersection LOS	F							

Copyright © 2007 University of Florida, All Rights Reserved HCS+™ Version 5.3 Generated: 10/16/2014 8:16 AM

ALL-WAY STOP CONTROL ANALYSIS

General Information

Analyst	JMH
Agency/Co.	EMHT
Date Performed	10/13/2014
Analysis Time Period	PM Peak

Site Information

Intersection	Hyland-Croy/McKitrick
Jurisdiction	Dublin
Analysis Year	2024 FB w/o HCSD - SCHOOL

Project ID 20131358 Riviera TIS

East/West Street: McKitrick Rd

North/South Street: Hyland-Croy Rd

Volume Adjustments and Site Characteristics

Approach	Eastbound			Westbound		
Movement	L	T	R	L	T	R
Volume (veh/h)	35	77	9	71	61	10
%Thrus Left Lane						

Approach	Northbound			Southbound		
Movement	L	T	R	L	T	R
Volume (veh/h)	12	541	86	5	427	33
%Thrus Left Lane						

	Eastbound		Westbound		Northbound		Southbound	
	L1	L2	L1	L2	L1	L2	L1	L2
Configuration	LTR		LTR		LTR		LTR	
PHF	0.90		0.90		0.90		0.90	
Flow Rate (veh/h)	133		156		709		515	
% Heavy Vehicles	1		1		1		2	
No. Lanes	1		1		1		1	
Geometry Group	1		1		1		1	
Duration, T	0.25							

Saturation Headway Adjustment Worksheet

Prop. Left-Turns	0.3		0.5		0.0		0.0	
Prop. Right-Turns	0.1		0.1		0.1		0.1	
Prop. Heavy Vehicle	0.0		0.0		0.0		0.0	
hLT-adj	0.2	0.2	0.2	0.2	0.2	0.2	0.2	0.2
hRT-adj	-0.6	-0.6	-0.6	-0.6	-0.6	-0.6	-0.6	-0.6
hHV-adj	1.7	1.7	1.7	1.7	1.7	1.7	1.7	1.7
hadj, computed	0.0		0.1		-0.1		-0.0	

Departure Headway and Service Time

hd, initial value (s)	3.20		3.20		3.20		3.20	
x, initial	0.12		0.14		0.63		0.46	
hd, final value (s)	7.88		7.80		6.07		6.25	
x, final value	0.29		0.34		1.20		0.89	
Move-up time, m (s)	2.0		2.0		2.0		2.0	
Service Time, t_s (s)	5.9		5.8		4.1		4.3	

Capacity and Level of Service

	Eastbound		Westbound		Northbound		Southbound	
	L1	L2	L1	L2	L1	L2	L1	L2
Capacity (veh/h)	383		406		709		572	
Delay (s/veh)	14.07		14.74		125.29		41.05	
LOS	B		B		F		E	
Approach: Delay (s/veh)	14.07		14.74		125.29		41.05	
LOS	B		B		F		E	
Intersection Delay (s/veh)	75.44							
Intersection LOS	F							

Copyright © 2007 University of Florida, All Rights Reserved

HCS+™ Version 5.3

Generated: 10/15/2014 2:51 PM

MOVEMENT SUMMARY

Site: 2024 PM Full Build w/ HCSD

Roundabout with 1-lane approaches and circulating road

Roundabout

Movement Performance - Vehicles											
Mov ID	Turn	Demand Flow veh/h	HV %	Deg. Satn v/c	Average Delay sec	Level of Service	95% Back of Queue Vehicles veh	95% Back of Queue Distance ft	Prop. Queued	Effective Stop Rate per veh	Average Speed mph
South: Hyland-Croy Rd											
3L	L	13	0.0	0.601	14.6	LOS B	4.9	124.2	0.47	0.79	31.8
8T	T	601	0.6	0.601	8.1	LOS A	4.9	124.2	0.47	0.56	34.1
8R	R	99	1.1	0.601	9.3	LOS A	4.9	124.2	0.47	0.62	33.8
Approach		713	0.7	0.601	8.4	LOS A	4.9	124.2	0.47	0.57	34.0
East: McKitrick Rd											
1L	L	82	0.0	0.239	14.4	LOS B	1.3	31.8	0.67	0.89	26.0
6T	T	67	1.6	0.239	8.9	LOS A	1.3	31.8	0.67	0.75	28.4
6R	R	11	0.0	0.239	9.4	LOS A	1.3	31.8	0.67	0.78	27.9
Approach		160	0.7	0.239	11.8	LOS B	1.3	31.8	0.67	0.83	27.1
North: Hyland-Croy Rd											
7L	L	4	0.0	0.481	13.9	LOS B	3.2	82.1	0.46	0.83	31.5
4T	T	479	2.4	0.481	8.3	LOS A	3.2	82.1	0.46	0.59	34.2
4R	R	37	0.0	0.481	9.4	LOS A	3.2	82.1	0.46	0.65	33.9
Approach		520	2.2	0.481	8.5	LOS A	3.2	82.1	0.46	0.59	34.2
West: McKitrick Rd											
5L	L	39	0.0	0.179	16.8	LOS B	0.9	22.2	0.60	0.88	30.4
2T	T	82	0.0	0.179	10.4	LOS B	0.9	22.2	0.60	0.73	33.2
2R	R	10	0.0	0.179	11.5	LOS B	0.9	22.2	0.60	0.77	33.1
Approach		131	0.0	0.179	12.4	LOS B	0.9	22.2	0.60	0.78	32.3
All Vehicles		1524	1.1	0.601	9.1	LOS A	4.9	124.2	0.50	0.62	33.0

Level of Service (LOS) Method: Delay & v/c (HCM 2010).
Roundabout LOS Method: Same as Signalised Intersections.
Vehicle movement LOS values are based on average delay and v/c ratio (degree of saturation) per movement
LOS F will result if v/c > 1 irrespective of movement delay value (does not apply for approaches and intersection).
Intersection and Approach LOS values are based on average delay for all movements (v/c not used as specified in HCM 2010).
Roundabout Capacity Model: SIDRA Standard.
SIDRA Standard Delay Model used.

Copyright © 2000-2011 Akcelik and Associates Pty Ltd
www.sidrasolutions.com

SIDRA INTERSECTION

MOVEMENT SUMMARY

Site: 2024 PM Full Build w/o HCSD

Roundabout with 1-lane approaches and circulating road

Roundabout

Movement Performance - Vehicles											
Mov ID	Turn	Demand Flow veh/h	HV %	Deg. Satn v/c	Average Delay sec	Level of Service	95% Back of Queue Vehicles veh	95% Back of Queue Distance ft	Prop. Queued	Effective Stop Rate per veh	Average Speed mph
South: Hyland-Croy Rd											
3L	L	13	0.0	0.602	14.6	LOS B	4.9	124.0	0.48	0.80	31.8
8T	T	601	0.6	0.602	8.2	LOS A	4.9	124.0	0.48	0.57	34.1
8R	R	96	1.1	0.602	9.3	LOS A	4.9	124.0	0.48	0.63	33.8
Approach		710	0.7	0.602	8.4	LOS A	4.9	124.0	0.48	0.58	34.0
East: McKitrick Rd											
1L	L	79	0.0	0.236	14.4	LOS B	1.3	31.5	0.67	0.89	26.0
6T	T	68	1.6	0.236	8.9	LOS A	1.3	31.5	0.67	0.75	28.4
6R	R	11	0.0	0.236	9.4	LOS A	1.3	31.5	0.67	0.78	27.9
Approach		158	0.7	0.236	11.7	LOS B	1.3	31.5	0.67	0.82	27.1
North: Hyland-Croy Rd											
7L	L	6	0.0	0.477	13.8	LOS B	3.2	81.0	0.45	0.83	31.5
4T	T	474	2.4	0.477	8.3	LOS A	3.2	81.0	0.45	0.59	34.2
4R	R	37	0.0	0.477	9.3	LOS A	3.2	81.0	0.45	0.65	33.9
Approach		517	2.2	0.477	8.4	LOS A	3.2	81.0	0.45	0.59	34.2
West: McKitrick Rd											
5L	L	39	0.0	0.182	16.8	LOS B	0.9	22.6	0.60	0.88	30.4
2T	T	86	0.0	0.182	10.3	LOS B	0.9	22.6	0.60	0.72	33.2
2R	R	10	0.0	0.182	11.4	LOS B	0.9	22.6	0.60	0.77	33.1
Approach		134	0.0	0.182	12.3	LOS B	0.9	22.6	0.60	0.77	32.3
All Vehicles		1519	1.1	0.602	9.1	LOS A	4.9	124.0	0.50	0.63	33.1

Level of Service (LOS) Method: Delay & v/c (HCM 2010).
Roundabout LOS Method: Same as Signalised Intersections.
Vehicle movement LOS values are based on average delay and v/c ratio (degree of saturation) per movement
LOS F will result if v/c > 1 irrespective of movement delay value (does not apply for approaches and intersection).
Intersection and Approach LOS values are based on average delay for all movements (v/c not used as specified in HCM 2010).
Roundabout Capacity Model: SIDRA Standard.
SIDRA Standard Delay Model used.

Copyright © 2000-2011 Akcelik and Associates Pty Ltd
www.sidrasolutions.com

SIDRA INTERSECTION

HYLAND-CROY ROAD / TUSCANY DRIVE

2

TWO-WAY STOP CONTROL SUMMARY

General Information		Site Information	
Analyst	JMH	Intersection	Hyland-Croy/Tuscany
Agency/Co.	EMHT	Jurisdiction	Dublin
Date Performed	10/13/2014	Analysis Year	2014 Full Build - SCHOOL
Analysis Time Period	AM Peak		

Project Description 20131358 Riviera TIS

East/West Street: Tuscany Dr | North/South Street: Hyland-Croy Rd

Intersection Orientation: North-South | Study Period (hrs): 0.25

Vehicle Volumes and Adjustments

Major Street	Northbound			Southbound		
Movement	1	2	3	4	5	6
	L	T	R	L	T	R
Volume (veh/h)		214	50	11	286	
Peak-Hour Factor, PHF	1.00	0.90	0.90	0.90	0.90	1.00
Hourly Flow Rate, HFR (veh/h)	0	237	55	12	317	0
Percent Heavy Vehicles	0	--	--	12	--	--
Median Type	Undivided					
RT Channelized			0			0
Lanes	0	1	1	1	1	0
Configuration		T	R	L	T	
Upstream Signal		0			0	

Minor Street	Eastbound			Westbound		
Movement	7	8	9	10	11	12
	L	T	R	L	T	R
Volume (veh/h)				90		7
Peak-Hour Factor, PHF	1.00	1.00	1.00	0.90	0.90	0.90
Hourly Flow Rate, HFR (veh/h)	0	0	0	100	0	7
Percent Heavy Vehicles	0	0	0	1	0	8
Percent Grade (%)		0			0	
Flared Approach		N			N	
Storage		0			0	
RT Channelized			0			0
Lanes	0	0	0	0	0	0
Configuration					LR	

Delay, Queue Length, and Level of Service

Approach	Northbound	Southbound	Westbound			Eastbound		
Movement	1	4	7	8	9	10	11	12
Lane Configuration		L		LR				
v (veh/h)		12		107				
C (m) (veh/h)		1215		487				
v/c		0.01		0.22				
95% queue length		0.03		0.83				
Control Delay (s/veh)		8.0		14.5				
LOS		A		B				
Approach Delay (s/veh)	--	--	14.5					
Approach LOS	--	--	B					

Copyright © 2007 University of Florida, All Rights Reserved HCS+™ Version 5.3 Generated: 10/15/2014 10:37 AM

2

TWO-WAY STOP CONTROL SUMMARY

General Information		Site Information	
Analyst	JMH	Intersection	Hyland-Croy/Tuscany
Agency/Co.	EMHT	Jurisdiction	Dublin
Date Performed	10/13/2014	Analysis Year	2014 FB w/o HCSD - SCHOOL
Analysis Time Period	AM Peak		

Project Description 20131358 Riviera TIS

East/West Street: Tuscany Dr | North/South Street: Hyland-Croy Rd

Intersection Orientation: North-South | Study Period (hrs): 0.25

Vehicle Volumes and Adjustments

Major Street	Northbound			Southbound		
Movement	1	2	3	4	5	6
	L	T	R	L	T	R
Volume (veh/h)		188	63	23	262	
Peak-Hour Factor, PHF	1.00	0.90	0.90	0.90	0.90	1.00
Hourly Flow Rate, HFR (veh/h)	0	208	70	25	291	0
Percent Heavy Vehicles	0	--	--	12	--	--
Median Type	Undivided					
RT Channelized			0			0
Lanes	0	1	1	1	1	0
Configuration		T	R	L	T	
Upstream Signal		0			0	

Minor Street	Eastbound			Westbound		
Movement	7	8	9	10	11	12
	L	T	R	L	T	R
Volume (veh/h)				109		20
Peak-Hour Factor, PHF	1.00	1.00	1.00	0.90	0.90	0.90
Hourly Flow Rate, HFR (veh/h)	0	0	0	121	0	22
Percent Heavy Vehicles	0	0	0	1	0	8
Percent Grade (%)	0			0		
Flared Approach		N			N	
Storage		0			0	
RT Channelized			0			0
Lanes	0	0	0	0	0	0
Configuration					LR	

Delay, Queue Length, and Level of Service

Approach	Northbound	Southbound	Westbound			Eastbound		
Movement	1	4	7	8	9	10	11	12
Lane Configuration		L		LR				
v (veh/h)		25		143				
C (m) (veh/h)		1229		520				
v/c		0.02		0.28				
95% queue length		0.06		1.11				
Control Delay (s/veh)		8.0		14.5				
LOS		A		B				
Approach Delay (s/veh)	--	--	14.5					
Approach LOS	--	--	B					

Copyright © 2007 University of Florida, All Rights Reserved HCS+TM Version 5.3 Generated: 10/15/2014 3:04 PM

TWO-WAY STOP CONTROL SUMMARY

General Information

Analyst	JMH
Agency/Co.	EMHT
Date Performed	10/13/2014
Analysis Time Period	AM Peak

Site Information

Intersection	Hyland-Croy/Tuscany
Jurisdiction	Dublin
Analysis Year	2024 Full Build - SCHOOL

Project Description 20131358 Riviera TIS

East/West Street: Tuscany Dr | North/South Street: Hyland-Croy Rd

Intersection Orientation: North-South | Study Period (hrs): 0.25

Vehicle Volumes and Adjustments

Major Street	Northbound			Southbound		
Movement	1	2	3	4	5	6
	L	T	R	L	T	R
Volume (veh/h)		464	70	14	741	
Peak-Hour Factor, PHF	1.00	0.90	0.90	0.90	0.90	1.00
Hourly Flow Rate, HFR (veh/h)	0	515	77	15	823	0
Percent Heavy Vehicles	0	--	--	12	--	--
Median Type	Undivided					
RT Channelized			0			0
Lanes	0	1	1	1	1	0
Configuration		T	R	L	T	
Upstream Signal		0			0	

Minor Street	Eastbound			Westbound		
Movement	7	8	9	10	11	12
	L	T	R	L	T	R
Volume (veh/h)				126		8
Peak-Hour Factor, PHF	1.00	1.00	1.00	0.90	0.90	0.90
Hourly Flow Rate, HFR (veh/h)	0	0	0	140	0	8
Percent Heavy Vehicles	0	0	0	1	0	8
Percent Grade (%)		0			0	
Flared Approach		N			N	
Storage		0			0	
RT Channelized			0			0
Lanes	0	0	0	0	0	0
Configuration					LR	

Delay, Queue Length, and Level of Service

Approach	Northbound	Southbound	Westbound			Eastbound		
Movement	1	4	7	8	9	10	11	12
Lane Configuration		L		LR				
v (veh/h)		15		148				
C (m) (veh/h)		936		166				
v/c		0.02		0.89				
95% queue length		0.05		6.41				
Control Delay (s/veh)		8.9		98.7				
LOS		A		F				
Approach Delay (s/veh)	--	--	98.7					
Approach LOS	--	--	F					

Copyright © 2007 University of Florida, All Rights Reserved HCS+™ Version 5.3 Generated: 10/15/2014 10:41 AM

2

TWO-WAY STOP CONTROL SUMMARY

General Information		Site Information	
Analyst	JMH	Intersection	Hyland-Croy/Tuscany
Agency/Co.	EMHT	Jurisdiction	Dublin
Date Performed	10/13/2014	Analysis Year	2024 FB w/o HCSD - SCHOOL
Analysis Time Period	AM Peak		

Project Description 20131358 Riviera TIS

East/West Street: Tuscany Dr | North/South Street: Hyland-Croy Rd

Intersection Orientation: North-South | Study Period (hrs): 0.25

Vehicle Volumes and Adjustments

Major Street	Northbound			Southbound		
Movement	1	2	3	4	5	6
	L	T	R	L	T	R
Volume (veh/h)		438	83	26	717	
Peak-Hour Factor, PHF	1.00	0.90	0.90	0.90	0.90	1.00
Hourly Flow Rate, HFR (veh/h)	0	486	92	28	796	0
Percent Heavy Vehicles	0	--	--	12	--	--
Median Type	Undivided					
RT Channelized			0			0
Lanes	0	1	1	1	1	0
Configuration		T	R	L	T	
Upstream Signal		0			0	

Minor Street	Eastbound			Westbound		
Movement	7	8	9	10	11	12
	L	T	R	L	T	R
Volume (veh/h)				145		21
Peak-Hour Factor, PHF	1.00	1.00	1.00	0.90	0.90	0.90
Hourly Flow Rate, HFR (veh/h)	0	0	0	161	0	23
Percent Heavy Vehicles	0	0	0	1	0	8
Percent Grade (%)		0			0	
Flared Approach		N			N	
Storage		0			0	
RT Channelized			0			0
Lanes	0	0	0	0	0	0
Configuration					LR	

Delay, Queue Length, and Level of Service

Approach	Northbound	Southbound	Westbound			Eastbound		
Movement	1	4	7	8	9	10	11	12
Lane Configuration		L		LR				
v (veh/h)		28		184				
C (m) (veh/h)		948		181				
v/c		0.03		1.02				
95% queue length		0.09		8.50				
Control Delay (s/veh)		8.9		124.1				
LOS		A		F				
Approach Delay (s/veh)	--	--	124.1					
Approach LOS	--	--	F					

Copyright © 2007 University of Florida, All Rights Reserved HCS+™ Version 5.3 Generated: 10/15/2014 3:08 PM

2

TWO-WAY STOP CONTROL SUMMARY

General Information		Site Information	
Analyst	JMH	Intersection	Hyland-Croy/Tuscany
Agency/Co.	EMHT	Jurisdiction	Dublin
Date Performed	10/13/2014	Analysis Year	2014 Full Build - SCHOOL
Analysis Time Period	PM Peak		

Project Description 20131358 Riviera TIS

East/West Street: Tuscany Dr | North/South Street: Hyland-Croy Rd

Intersection Orientation: North-South | Study Period (hrs): 0.25

Vehicle Volumes and Adjustments

Major Street	Northbound			Southbound		
Movement	1	2	3	4	5	6
	L	T	R	L	T	R
Volume (veh/h)		269	37	6	186	
Peak-Hour Factor, PHF	1.00	0.90	0.90	0.90	0.90	1.00
Hourly Flow Rate, HFR (veh/h)	0	298	41	6	206	0
Percent Heavy Vehicles	0	--	--	12	--	--
Median Type	Undivided					
RT Channelized			0			0
Lanes	0	1	1	1	1	0
Configuration		T	R	L	T	
Upstream Signal		0			0	

Minor Street	Eastbound			Westbound		
Movement	7	8	9	10	11	12
	L	T	R	L	T	R
Volume (veh/h)				38		5
Peak-Hour Factor, PHF	1.00	1.00	1.00	0.90	0.90	0.90
Hourly Flow Rate, HFR (veh/h)	0	0	0	42	0	5
Percent Heavy Vehicles	0	0	0	1	0	8
Percent Grade (%)		0			0	
Flared Approach		N			N	
Storage		0			0	
RT Channelized			0			0
Lanes	0	0	0	0	0	0
Configuration					LR	

Delay, Queue Length, and Level of Service

Approach	Northbound	Southbound	Westbound			Eastbound		
Movement	1	4	7	8	9	10	11	12
Lane Configuration		L		LR				
v (veh/h)		6		47				
C (m) (veh/h)		1166		534				
v/c		0.01		0.09				
95% queue length		0.02		0.29				
Control Delay (s/veh)		8.1		12.4				
LOS		A		B				
Approach Delay (s/veh)	--	--	12.4					
Approach LOS	--	--	B					

Copyright © 2007 University of Florida, All Rights Reserved HCS+™ Version 5.3 Generated: 10/15/2014 10:38 AM

2

TWO-WAY STOP CONTROL SUMMARY

General Information

Analyst	JMH
Agency/Co.	EMHT
Date Performed	10/13/2014
Analysis Time Period	PM Peak

Site Information

Intersection	Hyland-Croy/Tuscany
Jurisdiction	Dublin
Analysis Year	2014 FB w/o HCSD - SCHOOL

Project Description 20131358 Riviera TIS

East/West Street: Tuscany Dr | North/South Street: Hyland-Croy Rd

Intersection Orientation: North-South | Study Period (hrs): 0.25

Vehicle Volumes and Adjustments

Major Street	Northbound			Southbound		
Movement	1	2	3	4	5	6
	L	T	R	L	T	R
Volume (veh/h)		258	53	13	172	
Peak-Hour Factor, PHF	1.00	0.90	0.90	0.90	0.90	1.00
Hourly Flow Rate, HFR (veh/h)	0	286	58	14	191	0
Percent Heavy Vehicles	0	--	--	12	--	--
Median Type	Undivided					
RT Channelized			0			0
Lanes	0	1	1	1	1	0
Configuration		T	R	L	T	
Upstream Signal		0			0	

Minor Street	Eastbound			Westbound		
Movement	7	8	9	10	11	12
	L	T	R	L	T	R
Volume (veh/h)				54		13
Peak-Hour Factor, PHF	1.00	1.00	1.00	0.90	0.90	0.90
Hourly Flow Rate, HFR (veh/h)	0	0	0	60	0	14
Percent Heavy Vehicles	0	0	0	1	0	8
Percent Grade (%)	0			0		
Flared Approach		N			N	
Storage		0			0	
RT Channelized			0			0
Lanes	0	0	0	0	0	0
Configuration					LR	

Delay, Queue Length, and Level of Service

Approach	Northbound	Southbound	Westbound			Eastbound		
Movement	1	4	7	8	9	10	11	12
Lane Configuration		L		LR				
v (veh/h)		14		74				
C (m) (veh/h)		1161		554				
v/c		0.01		0.13				
95% queue length		0.04		0.46				
Control Delay (s/veh)		8.1		12.5				
LOS		A		B				
Approach Delay (s/veh)	--	--	12.5					
Approach LOS	--	--	B					

Copyright © 2007 University of Florida, All Rights Reserved HCS+™ Version 5.3 Generated: 10/15/2014 3:05 PM

TWO-WAY STOP CONTROL SUMMARY

General Information		Site Information	
Analyst	JMH	Intersection	Hyland-Croy/Tuscany
Agency/Co.	EMHT	Jurisdiction	Dublin
Date Performed	10/13/2014	Analysis Year	2024 Full Build - SCHOOL
Analysis Time Period	PM Peak		

Project Description 20131358 Riviera TIS

East/West Street: Tuscany Dr | North/South Street: Hyland-Croy Rd

Intersection Orientation: North-South | Study Period (hrs): 0.25

Vehicle Volumes and Adjustments

Major Street	Northbound			Southbound		
Movement	1	2	3	4	5	6
	L	T	R	L	T	R
Volume (veh/h)		766	52	7	544	
Peak-Hour Factor, PHF	1.00	0.90	0.90	0.90	0.90	1.00
Hourly Flow Rate, HFR (veh/h)	0	851	57	7	604	0
Percent Heavy Vehicles	0	--	--	12	--	--
Median Type	Undivided					
RT Channelized			0			0
Lanes	0	1	1	1	1	0
Configuration		T	R	L	T	
Upstream Signal		0			0	

Minor Street	Eastbound			Westbound		
Movement	7	8	9	10	11	12
	L	T	R	L	T	R
Volume (veh/h)				54		6
Peak-Hour Factor, PHF	1.00	1.00	1.00	0.90	0.90	0.90
Hourly Flow Rate, HFR (veh/h)	0	0	0	60	0	6
Percent Heavy Vehicles	0	0	0	1	0	8
Percent Grade (%)		0			0	
Flared Approach		N			N	
Storage		0			0	
RT Channelized			0			0
Lanes	0	0	0	0	0	0
Configuration					LR	

Delay, Queue Length, and Level of Service

Approach	Northbound	Southbound	Westbound			Eastbound		
Movement	1	4	7	8	9	10	11	12
Lane Configuration		L		LR				
v (veh/h)		7		66				
C (m) (veh/h)		710		148				
v/c		0.01		0.45				
95% queue length		0.03		2.02				
Control Delay (s/veh)		10.1		47.6				
LOS		B		E				
Approach Delay (s/veh)	--	--	47.6					
Approach LOS	--	--	E					

Copyright © 2007 University of Florida, All Rights Reserved HCS+™ Version 5.3 Generated: 10/15/2014 10:42 AM

TWO-WAY STOP CONTROL SUMMARY

General Information

Analyst	JMH
Agency/Co.	EMHT
Date Performed	10/13/2014
Analysis Time Period	PM Peak

Site Information

Intersection	Hyland-Croy/Tuscany
Jurisdiction	Dublin
Analysis Year	2024 FB w/o HCSD - SCHOOL

Project Description 20131358 Riviera TIS

East/West Street: Tuscany Dr | North/South Street: Hyland-Croy Rd

Intersection Orientation: North-South | Study Period (hrs): 0.25

Vehicle Volumes and Adjustments

Major Street	Northbound			Southbound		
Movement	1	2	3	4	5	6
	L	T	R	L	T	R
Volume (veh/h)		755	68	14	530	
Peak-Hour Factor, PHF	1.00	0.90	0.90	0.90	0.90	1.00
Hourly Flow Rate, HFR (veh/h)	0	838	75	15	588	0
Percent Heavy Vehicles	0	--	--	12	--	--
Median Type	Undivided					
RT Channelized			0			0
Lanes	0	1	1	1	1	0
Configuration		T	R	L	T	
Upstream Signal		0			0	

Minor Street	Eastbound			Westbound		
Movement	7	8	9	10	11	12
	L	T	R	L	T	R
Volume (veh/h)				70		14
Peak-Hour Factor, PHF	1.00	1.00	1.00	0.90	0.90	0.90
Hourly Flow Rate, HFR (veh/h)	0	0	0	77	0	15
Percent Heavy Vehicles	0	0	0	1	0	8
Percent Grade (%)	0			0		
Flared Approach		N			N	
Storage		0			0	
RT Channelized			0			0
Lanes	0	0	0	0	0	0
Configuration					LR	

Delay, Queue Length, and Level of Service

Approach	Northbound	Southbound	Westbound			Eastbound		
Movement	1	4	7	8	9	10	11	12
Lane Configuration		L		LR				
v (veh/h)		15		92				
C (m) (veh/h)		707		156				
v/c		0.02		0.59				
95% queue length		0.06		3.11				
Control Delay (s/veh)		10.2		56.8				
LOS		B		F				
Approach Delay (s/veh)	--	--	56.8					
Approach LOS	--	--	F					

Copyright © 2007 University of Florida, All Rights Reserved HCS+TM Version 5.3 Generated: 10/15/2014 3:09 PM

HYLAND-CROY ROAD / SITE DRIVE

3

TWO-WAY STOP CONTROL SUMMARY

General Information		Site Information	
Analyst	JMH	Intersection	Hyland-Croy/Site Dr
Agency/Co.	EMHT	Jurisdiction	Dublin
Date Performed	10/13/2014	Analysis Year	2014 Full Build - SCHOOL
Analysis Time Period	AM Peak		

Project Description 20131358 Riviera TIS

East/West Street: Site Drive	North/South Street: Hyland-Croy Rd
Intersection Orientation: North-South	Study Period (hrs): 0.25

Vehicle Volumes and Adjustments

Major Street	Northbound			Southbound		
Movement	1	2	3	4	5	6
	L	T	R	L	T	R
Volume (veh/h)		238	51	24	352	
Peak-Hour Factor, PHF	1.00	0.90	0.90	0.90	0.90	1.00
Hourly Flow Rate, HFR (veh/h)	0	264	56	26	391	0
Percent Heavy Vehicles	0	--	--	1	--	--
Median Type	Undivided					
RT Channelized			0			0
Lanes	0	1	0	0	1	0
Configuration			TR	LT		
Upstream Signal		0			0	

Minor Street	Eastbound			Westbound		
Movement	7	8	9	10	11	12
	L	T	R	L	T	R
Volume (veh/h)				61		26
Peak-Hour Factor, PHF	1.00	1.00	1.00	0.90	1.00	0.90
Hourly Flow Rate, HFR (veh/h)	0	0	0	67	0	28
Percent Heavy Vehicles	0	0	0	1	0	1
Percent Grade (%)		0			0	
Flared Approach		N			N	
Storage		0			0	
RT Channelized			0			0
Lanes	0	0	0	0	0	0
Configuration					LR	

Delay, Queue Length, and Level of Service

Approach	Northbound	Southbound	Westbound			Eastbound		
Movement	1	4	7	8	9	10	11	12
Lane Configuration		LT		LR				
v (veh/h)		26		95				
C (m) (veh/h)		1246		445				
v/c		0.02		0.21				
95% queue length		0.06		0.80				
Control Delay (s/veh)		8.0		15.3				
LOS		A		C				
Approach Delay (s/veh)	--	--	15.3					
Approach LOS	--	--	C					

Copyright © 2007 University of Florida, All Rights Reserved HCS+™ Version 5.3 Generated: 10/15/2014 10:53 AM

TWO-WAY STOP CONTROL SUMMARY

General Information		Site Information	
Analyst	JMH	Intersection	Hyland-Croy/Site Dr
Agency/Co.	EMHT	Jurisdiction	Dublin
Date Performed	10/13/2014	Analysis Year	2014 Full Build - SCHOOL
Analysis Time Period	AM Peak		

Project Description 20131358 Riviera TIS

East/West Street: Site Drive	North/South Street: Hyland-Croy Rd
Intersection Orientation: North-South	Study Period (hrs): 0.25

Vehicle Volumes and Adjustments

Major Street	Northbound			Southbound		
Movement	1	2	3	4	5	6
	L	T	R	L	T	R
Volume (veh/h)		238	51	24	352	
Peak-Hour Factor, PHF	1.00	0.90	0.90	0.90	0.90	1.00
Hourly Flow Rate, HFR (veh/h)	0	264	56	26	391	0
Percent Heavy Vehicles	0	--	--	1	--	--
Median Type	Undivided					
RT Channelized			0			0
Lanes	0	1	0	1	1	0
Configuration			TR	L	T	
Upstream Signal		0			0	

Minor Street	Eastbound			Westbound		
Movement	7	8	9	10	11	12
	L	T	R	L	T	R
Volume (veh/h)				61		26
Peak-Hour Factor, PHF	1.00	1.00	1.00	0.90	1.00	0.90
Hourly Flow Rate, HFR (veh/h)	0	0	0	67	0	28
Percent Heavy Vehicles	0	0	0	1	0	1
Percent Grade (%)		0			0	
Flared Approach		N			N	
Storage		0			0	
RT Channelized			0			0
Lanes	0	0	0	0	0	0
Configuration					LR	

Delay, Queue Length, and Level of Service

Approach	Northbound	Southbound	Westbound			Eastbound		
Movement	1	4	7	8	9	10	11	12
Lane Configuration		L		LR				
v (veh/h)		26		95				
C (m) (veh/h)		1246		445				
v/c		0.02		0.21				
95% queue length		0.06		0.80				
Control Delay (s/veh)		8.0		15.3				
LOS		A		C				
Approach Delay (s/veh)	--	--	15.3					
Approach LOS	--	--	C					

Copyright © 2010 University of Florida, All Rights Reserved HCS+TM Version 5.6 Generated: 10/16/2014 4:34 PM

TWO-WAY STOP CONTROL SUMMARY

General Information		Site Information	
Analyst	JMH	Intersection	Hyland-Croy/Site Dr
Agency/Co.	EMHT	Jurisdiction	Dublin
Date Performed	10/13/2014	Analysis Year	2024 Full Build - SCHOOL
Analysis Time Period	AM Peak		

Project Description 20131358 Riviera TIS

East/West Street: Site Drive	North/South Street: Hyland-Croy Rd
Intersection Orientation: North-South	Study Period (hrs): 0.25

Vehicle Volumes and Adjustments

Major Street	Northbound			Southbound		
Movement	1	2	3	4	5	6
	L	T	R	L	T	R
Volume (veh/h)		508	51	24	843	
Peak-Hour Factor, PHF	1.00	0.90	0.90	0.90	0.90	1.00
Hourly Flow Rate, HFR (veh/h)	0	564	56	26	936	0
Percent Heavy Vehicles	0	--	--	1	--	--
Median Type	Undivided					
RT Channelized			0			0
Lanes	0	1	1	1	1	0
Configuration		T	R	L	T	
Upstream Signal		0			0	

Minor Street	Eastbound			Westbound		
Movement	7	8	9	10	11	12
	L	T	R	L	T	R
Volume (veh/h)				61		26
Peak-Hour Factor, PHF	1.00	1.00	1.00	0.90	1.00	0.90
Hourly Flow Rate, HFR (veh/h)	0	0	0	67	0	28
Percent Heavy Vehicles	0	0	0	1	0	1
Percent Grade (%)		0			0	
Flared Approach		N			N	
Storage		0			0	
RT Channelized			0			0
Lanes	0	0	0	0	0	0
Configuration					LR	

Delay, Queue Length, and Level of Service

Approach	Northbound	Southbound	Westbound			Eastbound		
Movement	1	4	7	8	9	10	11	12
Lane Configuration		L		LR				
v (veh/h)		26		95				
C (m) (veh/h)		965		159				
v/c		0.03		0.60				
95% queue length		0.08		3.19				
Control Delay (s/veh)		8.8		56.6				
LOS		A		F				
Approach Delay (s/veh)	--	--	56.6					
Approach LOS	--	--	F					

Copyright © 2007 University of Florida, All Rights Reserved

HCS+TM Version 5.3 Generated: 10/15/2014 10:57 AM

MOVEMENT SUMMARY

Site: 2024 AM Full Build

Roundabout with 1-lane approaches and circulating road

Roundabout

Movement Performance - Vehicles

Mov ID	Turn	Demand Flow veh/h	HV %	Deg. Satn v/c	Average Delay sec	Level of Service	95% Back of Queue Vehicles veh	95% Back of Queue Distance ft	Prop. Queued	Effective Stop Rate per veh	Average Speed mph
South: Hyland-Croy Rd											
8T	T	564	1.0	0.434	7.3	LOS A	2.9	72.1	0.15	0.50	35.9
8R	R	57	1.0	0.434	8.4	LOS A	2.9	72.1	0.15	0.60	35.1
Approach		621	1.0	0.434	7.4	LOS A	2.9	72.1	0.15	0.50	35.8
East: Site Dr											
1L	L	68	1.0	0.127	13.5	LOS B	0.6	14.5	0.55	0.80	26.2
6R	R	29	1.0	0.127	8.5	LOS A	0.6	14.5	0.55	0.67	28.2
Approach		97	1.0	0.127	12.0	LOS B	0.6	14.5	0.55	0.76	26.8
North: Hyland-Croy Rd											
7L	L	27	1.0	0.724	13.5	LOS B	8.2	207.0	0.45	0.76	31.5
4T	T	937	1.0	0.724	7.9	LOS A	8.2	207.0	0.45	0.51	34.3
Approach		963	1.0	0.724	8.0	LOS A	8.2	207.0	0.45	0.51	34.2
All Vehicles		1681	1.0	0.724	8.0	LOS A	8.2	207.0	0.34	0.52	34.2

Level of Service (LOS) Method: Delay & v/c (HCM 2010).
Roundabout LOS Method: Same as Signalised Intersections.
Vehicle movement LOS values are based on average delay and v/c ratio (degree of saturation) per movement
LOS F will result if v/c > 1 irrespective of movement delay value (does not apply for approaches and intersection).
Intersection and Approach LOS values are based on average delay for all movements (v/c not used as specified in HCM 2010).
Roundabout Capacity Model: SIDRA Standard.
SIDRA Standard Delay Model used.

Copyright © 2000-2011 Akcelik and Associates Pty Ltd
www.sidrasolutions.com

3

TWO-WAY STOP CONTROL SUMMARY

General Information		Site Information	
Analyst	JMH	Intersection	Hyland-Croy/Site Dr
Agency/Co.	EMHT	Jurisdiction	Dublin
Date Performed	10/13/2014	Analysis Year	2014 Full Build - SCHOOL
Analysis Time Period	PM Peak		

Project Description	20131358 Riviera TIS
East/West Street: Site Drive	North/South Street: Hyland-Croy Rd
Intersection Orientation: North-South	Study Period (hrs): 0.25

Vehicle Volumes and Adjustments

Major Street	Northbound			Southbound		
Movement	1	2	3	4	5	6
	L	T	R	L	T	R
Volume (veh/h)		295	44	14	210	
Peak-Hour Factor, PHF	1.00	0.90	0.90	0.90	0.90	1.00
Hourly Flow Rate, HFR (veh/h)	0	327	48	15	233	0
Percent Heavy Vehicles	0	--	--	1	--	--
Median Type	Undivided					
RT Channelized			0			0
Lanes	0	1	0	0	1	0
Configuration			TR	LT		
Upstream Signal		0			0	

Minor Street	Eastbound			Westbound		
Movement	7	8	9	10	11	12
	L	T	R	L	T	R
Volume (veh/h)				32		11
Peak-Hour Factor, PHF	1.00	1.00	1.00	0.90	1.00	0.90
Hourly Flow Rate, HFR (veh/h)	0	0	0	35	0	12
Percent Heavy Vehicles	0	0	0	1	0	1
Percent Grade (%)		0			0	
Flared Approach		N			N	
Storage		0			0	
RT Channelized			0			0
Lanes	0	0	0	0	0	0
Configuration					LR	

Delay, Queue Length, and Level of Service

Approach	Northbound	Southbound	Westbound			Eastbound		
Movement	1	4	7	8	9	10	11	12
Lane Configuration		LT		LR				
v (veh/h)		15		47				
C (m) (veh/h)		1189		495				
v/c		0.01		0.09				
95% queue length		0.04		0.31				
Control Delay (s/veh)		8.1		13.0				
LOS		A		B				
Approach Delay (s/veh)	--	--	13.0					
Approach LOS	--	--	B					

Copyright © 2007 University of Florida, All Rights Reserved

HCS+™ Version 5.3

Generated: 10/15/2014 10:55 AM

TWO-WAY STOP CONTROL SUMMARY

General Information		Site Information	
Analyst	JMH	Intersection	Hyland-Croy/Site Dr
Agency/Co.	EMHT	Jurisdiction	Dublin
Date Performed	10/13/2014	Analysis Year	2014 Full Build - SCHOOL
Analysis Time Period	PM Peak		

Project Description 20131358 Riviera TIS

East/West Street: Site Drive	North/South Street: Hyland-Croy Rd
Intersection Orientation: North-South	Study Period (hrs): 0.25

Vehicle Volumes and Adjustments

Major Street	Northbound			Southbound		
Movement	1	2	3	4	5	6
	L	T	R	L	T	R
Volume (veh/h)		295	44	14	210	
Peak-Hour Factor, PHF	1.00	0.90	0.90	0.90	0.90	1.00
Hourly Flow Rate, HFR (veh/h)	0	327	48	15	233	0
Percent Heavy Vehicles	0	--	--	1	--	--
Median Type	Undivided					
RT Channelized			0			0
Lanes	0	1	0	1	1	0
Configuration			TR	L	T	
Upstream Signal		0			0	

Minor Street	Eastbound			Westbound		
Movement	7	8	9	10	11	12
	L	T	R	L	T	R
Volume (veh/h)				32		11
Peak-Hour Factor, PHF	1.00	1.00	1.00	0.90	1.00	0.90
Hourly Flow Rate, HFR (veh/h)	0	0	0	35	0	12
Percent Heavy Vehicles	0	0	0	1	0	1
Percent Grade (%)		0			0	
Flared Approach		N			N	
Storage		0			0	
RT Channelized			0			0
Lanes	0	0	0	0	0	0
Configuration					LR	

Delay, Queue Length, and Level of Service

Approach	Northbound	Southbound	Westbound			Eastbound		
Movement	1	4	7	8	9	10	11	12
Lane Configuration		L		LR				
v (veh/h)		15		47				
C (m) (veh/h)		1189		495				
v/c		0.01		0.09				
95% queue length		0.04		0.31				
Control Delay (s/veh)		8.1		13.0				
LOS		A		B				
Approach Delay (s/veh)	--	--	13.0					
Approach LOS	--	--	B					

Copyright © 2010 University of Florida, All Rights Reserved HCS+™ Version 5.6 Generated: 10/16/2014 4:33 PM

3

TWO-WAY STOP CONTROL SUMMARY

General Information		Site Information	
Analyst	JMH	Intersection	Hyland-Croy/Site Dr
Agency/Co.	EMHT	Jurisdiction	Dublin
Date Performed	10/13/2014	Analysis Year	2024 Full Build - SCHOOL
Analysis Time Period	PM Peak		

Project Description 20131358 Riviera TIS

East/West Street: Site Drive	North/South Street: Hyland-Croy Rd
Intersection Orientation: North-South	Study Period (hrs): 0.25

Vehicle Volumes and Adjustments

Major Street	Northbound			Southbound		
Movement	1	2	3	4	5	6
	L	T	R	L	T	R
Volume (veh/h)		807	44	14	584	
Peak-Hour Factor, PHF	1.00	0.90	0.90	0.90	0.90	1.00
Hourly Flow Rate, HFR (veh/h)	0	896	48	15	648	0
Percent Heavy Vehicles	0	--	--	1	--	--
Median Type	Undivided					
RT Channelized			0			0
Lanes	0	1	1	1	1	0
Configuration		T	R	L	T	
Upstream Signal		0			0	

Minor Street	Eastbound			Westbound		
Movement	7	8	9	10	11	12
	L	T	R	L	T	R
Volume (veh/h)				32		11
Peak-Hour Factor, PHF	1.00	1.00	1.00	0.90	1.00	0.90
Hourly Flow Rate, HFR (veh/h)	0	0	0	35	0	12
Percent Heavy Vehicles	0	0	0	1	0	1
Percent Grade (%)		0			0	
Flared Approach		N			N	
Storage		0			0	
RT Channelized			0			0
Lanes	0	0	0	0	0	0
Configuration					LR	

Delay, Queue Length, and Level of Service

Approach	Northbound	Southbound	Westbound			Eastbound		
Movement	1	4	7	8	9	10	11	12
Lane Configuration		L		LR				
v (veh/h)		15		47				
C (m) (veh/h)		731		143				
v/c		0.02		0.33				
95% queue length		0.06		1.32				
Control Delay (s/veh)		10.0		42.0				
LOS		B		E				
Approach Delay (s/veh)	--	--	42.0					
Approach LOS	--	--	E					

Copyright © 2007 University of Florida, All Rights Reserved

HCS+™ Version 5.3

Generated: 10/15/2014 10:58 AM

MOVEMENT SUMMARY

Site: 2024 PM Full Build

Roundabout with 1-lane approaches and circulating road

Roundabout

Movement Performance - Vehicles											
Mov ID	Turn	Demand Flow veh/h	HV %	Deg. Satn v/c	Average Delay sec	Level of Service	95% Back of Queue Vehicles veh	95% Back of Queue Distance ft	Prop. Queued	Effective Stop Rate per veh	Average Speed mph
South: Hyland-Croy Rd											
8T	T	897	1.0	0.619	7.3	LOS A	5.3	132.6	0.14	0.49	36.0
8R	R	49	1.0	0.619	8.4	LOS A	5.3	132.6	0.14	0.59	35.2
Approach		946	1.0	0.619	7.3	LOS A	5.3	132.6	0.14	0.50	35.9
East: Site Dr											
1L	L	36	1.0	0.084	16.5	LOS B	0.4	10.4	0.69	0.84	24.8
6R	R	12	1.0	0.084	11.6	LOS B	0.4	10.4	0.69	0.75	26.4
Approach		48	1.0	0.084	15.3	LOS B	0.4	10.4	0.69	0.82	25.2
North: Hyland-Croy Rd											
7L	L	16	1.0	0.476	13.0	LOS B	3.6	90.1	0.21	0.86	31.6
4T	T	649	1.0	0.476	7.4	LOS A	3.6	90.1	0.21	0.49	35.6
Approach		664	1.0	0.476	7.5	LOS A	3.6	90.1	0.21	0.50	35.5
All Vehicles		1658	1.0	0.619	7.6	LOS A	5.3	132.6	0.18	0.51	35.3

Level of Service (LOS) Method: Delay & v/c (HCM 2010).
Roundabout LOS Method: Same as Signalised Intersections.
Vehicle movement LOS values are based on average delay and v/c ratio (degree of saturation) per movement
LOS F will result if v/c > 1 irrespective of movement delay value (does not apply for approaches and intersection).
Intersection and Approach LOS values are based on average delay for all movements (v/c not used as specified in HCM 2010).
Roundabout Capacity Model: SIDRA Standard.
SIDRA Standard Delay Model used.

Copyright © 2000-2011 Akcelik and Associates Pty Ltd
www.sidrasolutions.com

HYLAND-CROY ROAD / BRAND ROAD / MITCHELL-DEWITT ROAD

MOVEMENT SUMMARY

Site: 2014 AM Full Build w/ HCSD

4

Roundabout with thru/left & right turn lanes on NB & SB approaches, 1-lane on EB & WB approaches, and 1 circulating lane

Roundabout

Movement Performance - Vehicles

Mov ID	Turn	Demand Flow veh/h	HV %	Deg. Satn v/c	Average Delay sec	Level of Service	95% Back of Queue Vehicles veh	95% Back of Queue Distance ft	Prop. Queued	Effective Stop Rate per veh	Average Speed mph
South: Hyland-Croy Rd											
3L	L	19	4.2	0.213	15.1	LOS B	1.0	27.5	0.37	0.90	32.0
8T	T	227	12.1	0.213	7.1	LOS A	1.0	27.5	0.37	0.52	35.6
8R	R	134	8.2	0.137	9.1	LOS A	0.6	15.7	0.37	0.60	34.4
Approach		380	10.3	0.213	8.2	LOS A	1.0	27.5	0.37	0.57	35.0
East: Brand Rd											
1L	L	121	1.9	0.278	11.9	LOS B	1.4	36.1	0.46	0.79	27.4
6T	T	70	1.0	0.278	4.9	LOS A	1.4	36.1	0.46	0.47	30.0
6R	R	77	10.6	0.278	6.1	LOS A	1.4	36.1	0.46	0.56	29.3
Approach		268	4.2	0.278	8.5	LOS A	1.4	36.1	0.46	0.64	28.5
North: Hyland-Croy Rd											
7L	L	124	3.5	0.272	13.9	LOS B	1.4	37.3	0.38	0.82	31.5
4T	T	216	6.5	0.272	6.8	LOS A	1.4	37.3	0.38	0.50	35.3
4R	R	11	0.0	0.013	8.7	LOS A	0.1	1.3	0.35	0.55	34.5
Approach		351	5.2	0.272	9.4	LOS A	1.4	37.3	0.38	0.62	33.8
West: Mitchell-Dewitt Rd											
5L	L	16	14.3	0.157	17.1	LOS B	0.7	19.5	0.53	0.90	31.1
2T	T	81	10.2	0.157	8.7	LOS A	0.7	19.5	0.53	0.64	34.4
2R	R	28	2.1	0.157	10.0	LOS B	0.7	19.5	0.53	0.70	34.1
Approach		124	8.9	0.157	10.0	LOS B	0.7	19.5	0.53	0.69	33.8
All Vehicles		1123	7.1	0.278	8.8	LOS A	1.4	37.3	0.41	0.61	32.8

Level of Service (LOS) Method: Delay & v/c (HCM 2010).
Roundabout LOS Method: Same as Signalised Intersections.
Vehicle movement LOS values are based on average delay and v/c ratio (degree of saturation) per movement
LOS F will result if v/c > 1 irrespective of movement delay value (does not apply for approaches and intersection).
Intersection and Approach LOS values are based on average delay for all movements (v/c not used as specified in HCM 2010).
Roundabout Capacity Model: SIDRA Standard.
SIDRA Standard Delay Model used.

Copyright © 2000-2011 Akcelik and Associates Pty Ltd
www.sidrasolutions.com

SIDRA INTERSECTION

MOVEMENT SUMMARY

Site: 2014 AM Full Build w/o HCSD

Roundabout with thru/left & right turn lanes on NB & SB approaches, 1-lane on EB & WB approaches, and 1 circulating lane

Roundabout

Movement Performance - Vehicles

Mov ID	Turn	Demand Flow veh/h	HV %	Deg. Satn v/c	Average Delay sec	Level of Service	95% Back of Queue Vehicles veh	95% Back of Queue Distance ft	Prop. Queued	Effective Stop Rate per veh	Average Speed mph
South: Hyland-Croy Rd											
3L	L	19	4.2	0.197	15.0	LOS B	0.9	25.1	0.35	0.89	32.0
8T	T	211	12.1	0.197	7.0	LOS A	0.9	25.1	0.35	0.51	35.7
8R	R	150	8.2	0.145	8.9	LOS A	0.6	16.9	0.35	0.59	34.5
Approach		380	10.2	0.197	8.2	LOS A	0.9	25.1	0.35	0.56	35.0
East: Brand Rd											
1L	L	146	1.9	0.278	11.8	LOS B	1.4	35.7	0.44	0.78	27.4
6T	T	76	1.0	0.278	4.8	LOS A	1.4	35.7	0.44	0.46	30.1
6R	R	53	10.6	0.278	6.0	LOS A	1.4	35.7	0.44	0.55	29.3
Approach		274	3.3	0.278	8.8	LOS A	1.4	35.7	0.44	0.64	28.4
North: Hyland-Croy Rd											
7L	L	107	3.5	0.245	14.0	LOS B	1.3	32.8	0.39	0.83	31.5
4T	T	191	6.5	0.245	6.9	LOS A	1.3	32.8	0.39	0.51	35.1
4R	R	7	0.0	0.008	8.9	LOS A	0.0	0.8	0.37	0.55	34.4
Approach		304	5.3	0.245	9.5	LOS A	1.3	32.8	0.39	0.62	33.7
West: Mitchell-Dewitt Rd											
5L	L	12	14.3	0.156	17.0	LOS B	0.7	19.1	0.52	0.91	31.2
2T	T	86	10.2	0.156	8.6	LOS A	0.7	19.1	0.52	0.63	34.5
2R	R	28	2.1	0.156	9.9	LOS A	0.7	19.1	0.52	0.69	34.2
Approach		126	8.8	0.156	9.7	LOS A	0.7	19.1	0.52	0.67	34.0
All Vehicles		1084	6.9	0.278	8.9	LOS A	1.4	35.7	0.41	0.61	32.7

Level of Service (LOS) Method: Delay & v/c (HCM 2010).
Roundabout LOS Method: Same as Signalised Intersections.
Vehicle movement LOS values are based on average delay and v/c ratio (degree of saturation) per movement
LOS F will result if v/c > 1 irrespective of movement delay value (does not apply for approaches and intersection).
Intersection and Approach LOS values are based on average delay for all movements (v/c not used as specified in HCM 2010).
Roundabout Capacity Model: SIDRA Standard.
SIDRA Standard Delay Model used.

Copyright © 2000-2011 Akcelik and Associates Pty Ltd
www.sidrasolutions.com

SIDRA INTERSECTION

MOVEMENT SUMMARY

Site: 2024 AM Full Build w/ HCSD

Roundabout with thru/left & right turn lanes on NB & SB approaches, 1-lane on EB & WB approaches, and 1 circulating lane

Roundabout

Movement Performance - Vehicles

Mov ID	Turn	Demand Flow veh/h	HV %	Deg. Satn v/c	Average Delay sec	Level of Service	95% Back of Queue Vehicles veh	95% Back of Queue Distance ft	Prop. Queued	Effective Stop Rate per veh	Average Speed mph
South: Hyland-Croy Rd											
3L	L	29	4.2	0.481	16.9	LOS B	3.2	88.5	0.67	0.92	31.4
8T	T	439	12.1	0.481	8.9	LOS A	3.2	88.5	0.67	0.67	33.8
8R	R	212	8.2	0.274	10.7	LOS B	1.4	37.8	0.59	0.74	33.3
Approach		680	10.5	0.481	9.8	LOS A	3.2	88.5	0.64	0.70	33.5
East: Brand Rd											
1L	L	186	1.9	0.602	16.4	LOS B	5.1	132.1	0.81	1.01	25.5
6T	T	109	1.0	0.602	9.3	LOS A	5.1	132.1	0.81	0.91	27.9
6R	R	156	10.6	0.602	10.6	LOS B	5.1	132.1	0.81	0.95	27.3
Approach		450	4.7	0.602	12.7	LOS B	5.1	132.1	0.81	0.97	26.6
North: Hyland-Croy Rd											
7L	L	270	3.5	0.741	17.0	LOS B	8.9	231.4	0.81	0.89	30.2
4T	T	581	6.5	0.741	9.9	LOS A	8.9	231.4	0.81	0.79	32.6
4R	R	17	0.0	0.022	9.4	LOS A	0.1	2.4	0.46	0.60	34.0
Approach		868	5.4	0.741	12.1	LOS B	8.9	231.4	0.80	0.82	31.8
West: Mitchell-Dewitt Rd											
5L	L	26	14.3	0.562	31.6	LOS C	4.5	120.9	0.97	1.10	24.4
2T	T	131	10.2	0.562	23.2	LOS C	4.5	120.9	0.97	1.09	25.9
2R	R	46	2.1	0.562	24.6	LOS C	4.5	120.9	0.97	1.10	25.7
Approach		202	8.9	0.562	24.6	LOS C	4.5	120.9	0.97	1.09	25.7
All Vehicles		2200	7.2	0.741	12.7	LOS B	8.9	231.4	0.77	0.84	30.4

Level of Service (LOS) Method: Delay & v/c (HCM 2010).
Roundabout LOS Method: Same as Signalised Intersections.
Vehicle movement LOS values are based on average delay and v/c ratio (degree of saturation) per movement
LOS F will result if v/c > 1 irrespective of movement delay value (does not apply for approaches and intersection).
Intersection and Approach LOS values are based on average delay for all movements (v/c not used as specified in HCM 2010).
Roundabout Capacity Model: SIDRA Standard.
SIDRA Standard Delay Model used.

Copyright © 2000-2011 Akcelik and Associates Pty Ltd
www.sidrasolutions.com

SIDRA INTERSECTION

MOVEMENT SUMMARY

Site: 2024 AM Full Build w/o HCSD

Roundabout with thru/left & right turn lanes on NB & SB approaches, 1-lane on EB & WB approaches, and 1 circulating lane
Roundabout

Movement Performance - Vehicles

Mov ID	Turn	Demand Flow veh/h	HV %	Deg. Satn v/c	Average Delay sec	Level of Service	95% Back of Queue Vehicles veh	95% Back of Queue Distance ft	Prop. Queued	Effective Stop Rate per veh	Average Speed mph
South: Hyland-Croy Rd											
3L	L	29	4.2	0.459	16.5	LOS B	2.9	79.7	0.64	0.91	31.5
8T	T	423	12.1	0.459	8.6	LOS A	2.9	79.7	0.64	0.64	33.9
8R	R	228	8.2	0.282	10.5	LOS B	1.5	39.1	0.57	0.73	33.4
Approach		680	10.5	0.459	9.6	LOS A	2.9	79.7	0.62	0.68	33.6
East: Brand Rd											
1L	L	210	1.9	0.593	15.9	LOS B	4.9	127.4	0.80	0.99	25.7
6T	T	114	1.0	0.593	8.9	LOS A	4.9	127.4	0.80	0.88	28.1
6R	R	132	10.6	0.593	10.1	LOS B	4.9	127.4	0.80	0.93	27.5
Approach		457	4.2	0.593	12.5	LOS B	4.9	127.4	0.80	0.95	26.7
North: Hyland-Croy Rd											
7L	L	252	3.5	0.724	17.2	LOS B	8.3	217.6	0.81	0.91	30.1
4T	T	557	6.5	0.724	10.1	LOS B	8.3	217.6	0.81	0.81	32.6
4R	R	12	0.0	0.017	9.5	LOS A	0.1	1.8	0.47	0.60	33.9
Approach		821	5.5	0.724	12.2	LOS B	8.3	217.6	0.80	0.83	31.8
West: Mitchell-Dewitt Rd											
5L	L	22	14.3	0.542	30.2	LOS C	4.3	114.1	0.96	1.09	25.0
2T	T	136	10.2	0.542	21.8	LOS C	4.3	114.1	0.96	1.07	26.6
2R	R	46	2.1	0.542	23.1	LOS C	4.3	114.1	0.96	1.08	26.5
Approach		203	8.8	0.542	23.0	LOS C	4.3	114.1	0.96	1.08	26.4
All Vehicles		2161	7.1	0.724	12.5	LOS B	8.3	217.6	0.76	0.83	30.5

Level of Service (LOS) Method: Delay & v/c (HCM 2010).
Roundabout LOS Method: Same as Signalised Intersections.
Vehicle movement LOS values are based on average delay and v/c ratio (degree of saturation) per movement
LOS F will result if v/c > 1 irrespective of movement delay value (does not apply for approaches and intersection).
Intersection and Approach LOS values are based on average delay for all movements (v/c not used as specified in HCM 2010).
Roundabout Capacity Model: SIDRA Standard.
SIDRA Standard Delay Model used.

Copyright © 2000-2011 Akcelik and Associates Pty Ltd
www.sidrasolutions.com

SIDRA INTERSECTION

MOVEMENT SUMMARY

Site: 2024 AM Full Build w/ HCSD - Expanded

Roundabout with thru/left & thru/right lanes on NB & SB approaches, 1-lane on EB & WB approaches, 2 circulating lanes NB & SB, and 1 circulating lane EB & WB
Roundabout

Movement Performance - Vehicles

Mov ID	Turn	Demand Flow veh/h	HV %	Deg. Satn v/c	Average Delay sec	Level of Service	95% Back of Queue Vehicles veh	95% Back of Queue Distance ft	Prop. Queued	Effective Stop Rate per veh	Average Speed mph
South: Hyland-Croy Rd											
3L	L	29	4.2	0.361	16.8	LOS B	2.0	54.2	0.60	0.91	31.2
8T	T	439	12.1	0.361	8.9	LOS A	2.1	56.0	0.59	0.65	34.0
8R	R	212	8.2	0.361	10.2	LOS B	2.1	56.0	0.59	0.73	33.6
Approach		680	10.5	0.361	9.6	LOS A	2.1	56.0	0.59	0.69	33.7
East: Brand Rd											
1L	L	186	1.9	0.583	13.9	LOS B	3.4	87.7	0.65	0.99	26.6
6T	T	109	1.0	0.583	7.2	LOS A	3.4	87.7	0.65	0.72	29.0
6R	R	156	10.6	0.583	8.0	LOS A	3.4	87.7	0.65	0.79	28.5
Approach		450	4.7	0.583	10.2	LOS B	3.4	87.7	0.65	0.85	27.7
North: Hyland-Croy Rd											
7L	L	270	3.5	0.402	14.8	LOS B	2.4	63.3	0.55	0.80	30.7
4T	T	581	6.5	0.402	7.8	LOS A	2.5	65.8	0.55	0.58	34.3
4R	R	17	0.0	0.402	9.1	LOS A	2.5	65.8	0.55	0.69	34.2
Approach		868	5.4	0.402	10.0	LOS A	2.5	65.8	0.55	0.65	33.0
West: Mitchell-Dewitt Rd											
5L	L	26	14.3	0.359	18.9	LOS B	1.5	39.8	0.66	1.00	30.2
2T	T	131	10.2	0.359	10.6	LOS B	1.5	39.8	0.66	0.81	33.5
2R	R	46	2.1	0.359	11.6	LOS B	1.5	39.8	0.66	0.87	33.3
Approach		202	8.9	0.359	11.9	LOS B	1.5	39.8	0.66	0.84	33.0
All Vehicles		2200	7.2	0.583	10.1	LOS B	3.4	87.7	0.59	0.72	32.0

Level of Service (LOS) Method: Delay & v/c (HCM 2010).
Roundabout LOS Method: Same as Signalised Intersections.
Vehicle movement LOS values are based on average delay and v/c ratio (degree of saturation) per movement
LOS F will result if v/c > 1 irrespective of movement delay value (does not apply for approaches and intersection).
Intersection and Approach LOS values are based on average delay for all movements (v/c not used as specified in HCM 2010).
Roundabout Capacity Model: SIDRA Standard.
SIDRA Standard Delay Model used.

Copyright © 2000-2011 Akcelik and Associates Pty Ltd
www.sidrasolutions.com

MOVEMENT SUMMARY

Site: 2024 AM Full Build w/o HCSD - Expanded

Roundabout with thru/left & thru/right lanes on NB & SB approaches, 1-lane on EB & WB approaches, 2 circulating lanes NB & SB, and 1 circulating lane EB & WB

Roundabout

Movement Performance - Vehicles

Mov ID	Turn	Demand Flow veh/h	HV %	Deg. Satn v/c	Average Delay sec	Level of Service	95% Back of Queue Vehicles veh	95% Back of Queue Distance ft	Prop. Queued	Effective Stop Rate per veh	Average Speed mph
South: Hyland-Croy Rd											
3L	L	29	4.2	0.357	16.7	LOS B	2.0	53.7	0.59	0.91	31.3
8T	T	423	12.1	0.357	8.8	LOS A	2.1	55.3	0.58	0.64	34.0
8R	R	228	8.2	0.357	10.1	LOS B	2.1	55.3	0.58	0.72	33.6
Approach		680	10.5	0.357	9.5	LOS A	2.1	55.3	0.58	0.68	33.8
East: Brand Rd											
1L	L	210	1.9	0.581	13.8	LOS B	3.4	87.8	0.64	0.98	26.6
6T	T	114	1.0	0.581	7.0	LOS A	3.4	87.8	0.64	0.71	29.0
6R	R	132	10.6	0.581	7.9	LOS A	3.4	87.8	0.64	0.77	28.5
Approach		457	4.2	0.581	10.4	LOS B	3.4	87.8	0.64	0.85	27.7
North: Hyland-Croy Rd											
7L	L	252	3.5	0.391	15.0	LOS B	2.4	61.0	0.57	0.81	30.7
4T	T	557	6.5	0.391	7.9	LOS A	2.4	63.5	0.57	0.59	34.2
4R	R	12	0.0	0.391	9.3	LOS A	2.4	63.5	0.56	0.70	34.1
Approach		821	5.5	0.391	10.1	LOS B	2.4	63.5	0.57	0.66	33.0
West: Mitchell-Dewitt Rd											
5L	L	22	14.3	0.455	26.9	LOS C	3.3	89.4	0.92	1.06	26.3
2T	T	136	10.2	0.455	18.7	LOS B	3.3	89.4	0.92	1.02	28.3
2R	R	46	2.1	0.455	19.6	LOS B	3.3	89.4	0.92	1.03	28.2
Approach		203	8.8	0.455	19.8	LOS B	3.3	89.4	0.92	1.03	28.0
All Vehicles		2161	7.1	0.581	10.9	LOS B	3.4	89.4	0.62	0.74	31.5

Level of Service (LOS) Method: Delay & v/c (HCM 2010).
Roundabout LOS Method: Same as Signalised Intersections.
Vehicle movement LOS values are based on average delay and v/c ratio (degree of saturation) per movement
LOS F will result if v/c > 1 irrespective of movement delay value (does not apply for approaches and intersection).
Intersection and Approach LOS values are based on average delay for all movements (v/c not used as specified in HCM 2010).
Roundabout Capacity Model: SIDRA Standard.
SIDRA Standard Delay Model used.

Copyright © 2000-2011 Akcelik and Associates Pty Ltd
www.sidrasolutions.com

MOVEMENT SUMMARY

Site: 2024 AM Full Build w/ HCSD - Expanded w/ WBRT

Roundabout with thru/left & thru/right lanes on NB & SB approaches, 1-lane on EB approach, thru/left & right turn lane on WB approach, 2 circulating lanes NB & SB, and 1 circulating lane EB & WB

Roundabout

Movement Performance - Vehicles

Mov ID	Turn	Demand Flow veh/h	HV %	Deg. Satn v/c	Average Delay sec	Level of Service	95% Back of Queue Vehicles veh	95% Back of Queue Distance ft	Prop. Queued	Effective Stop Rate per veh	Average Speed mph
South: Hyland-Croy Rd											
3L	L	29	4.2	0.361	16.8	LOS B	2.0	54.0	0.60	0.91	31.2
8T	T	439	12.1	0.361	8.9	LOS A	2.1	55.8	0.59	0.65	34.0
8R	R	212	8.2	0.361	10.2	LOS B	2.1	55.8	0.58	0.73	33.6
Approach		680	10.5	0.361	9.6	LOS A	2.1	55.8	0.59	0.69	33.7
East: Brand Rd											
1L	L	186	1.9	0.299	11.8	LOS B	1.2	31.5	0.49	0.85	27.3
6T	T	109	1.0	0.299	5.0	LOS A	1.2	31.5	0.49	0.48	29.7
6R	R	156	10.6	0.215	6.7	LOS A	0.8	21.2	0.49	0.62	29.2
Approach		450	4.7	0.299	8.4	LOS A	1.2	31.5	0.49	0.68	28.5
North: Hyland-Croy Rd											
7L	L	270	3.5	0.398	14.8	LOS B	2.3	60.6	0.54	0.80	30.7
4T	T	581	6.5	0.398	7.8	LOS A	2.4	62.9	0.53	0.58	34.4
4R	R	17	0.0	0.398	9.1	LOS A	2.4	62.9	0.53	0.69	34.2
Approach		868	5.4	0.398	10.0	LOS A	2.4	62.9	0.53	0.65	33.1
West: Mitchell-Dewitt Rd											
5L	L	26	14.3	0.357	18.9	LOS B	1.5	39.4	0.66	1.00	30.2
2T	T	131	10.2	0.357	10.6	LOS B	1.5	39.4	0.66	0.80	33.5
2R	R	46	2.1	0.357	11.6	LOS B	1.5	39.4	0.66	0.87	33.3
Approach		202	8.9	0.357	11.9	LOS B	1.5	39.4	0.66	0.84	33.0
All Vehicles		2200	7.2	0.398	9.7	LOS A	2.4	62.9	0.55	0.69	32.3

Level of Service (LOS) Method: Delay & v/c (HCM 2010).
Roundabout LOS Method: Same as Signalised Intersections.
Vehicle movement LOS values are based on average delay and v/c ratio (degree of saturation) per movement
LOS F will result if v/c > 1 irrespective of movement delay value (does not apply for approaches and intersection).
Intersection and Approach LOS values are based on average delay for all movements (v/c not used as specified in HCM 2010).
Roundabout Capacity Model: SIDRA Standard.
SIDRA Standard Delay Model used.

Copyright © 2000-2011 Akcelik and Associates Pty Ltd
www.sidrasolutions.com

MOVEMENT SUMMARY

Site: 2024 AM Full Build w/o HCSD - Expanded w/ WBRT

Roundabout with thru/left & thru/right lanes on NB & SB approaches, 1-lane on EB approach, thru/left & right turn lane on WB approach, 2 circulating lanes NB & SB, and 1 circulating lane EB & WB

Roundabout

Movement Performance - Vehicles

Mov ID	Turn	Demand Flow veh/h	HV %	Deg. Satn v/c	Average Delay sec	Level of Service	95% Back of Queue Vehicles veh	95% Back of Queue Distance ft	Prop. Queued	Effective Stop Rate per veh	Average Speed mph
South: Hyland-Croy Rd											
3L	L	29	4.2	0.357	16.7	LOS B	2.0	53.6	0.59	0.91	31.3
8T	T	423	12.1	0.357	8.8	LOS A	2.1	55.3	0.58	0.64	34.0
8R	R	228	8.2	0.357	10.1	LOS B	2.1	55.3	0.58	0.72	33.6
Approach		680	10.5	0.357	9.5	LOS A	2.1	55.3	0.58	0.68	33.8
East: Brand Rd											
1L	L	210	1.9	0.327	11.8	LOS B	1.4	35.3	0.50	0.85	27.3
6T	T	114	1.0	0.327	5.0	LOS A	1.4	35.3	0.50	0.48	29.7
6R	R	132	10.6	0.200	7.0	LOS A	0.7	19.1	0.49	0.64	29.2
Approach		457	4.2	0.327	8.7	LOS A	1.4	35.3	0.49	0.69	28.4
North: Hyland-Croy Rd											
7L	L	252	3.5	0.386	15.0	LOS B	2.3	58.5	0.55	0.81	30.7
4T	T	557	6.5	0.386	7.9	LOS A	2.3	60.8	0.55	0.59	34.3
4R	R	12	0.0	0.386	9.3	LOS A	2.3	60.8	0.55	0.70	34.2
Approach		821	5.5	0.386	10.1	LOS B	2.3	60.8	0.55	0.66	33.1
West: Mitchell-Dewitt Rd											
5L	L	22	14.3	0.452	26.9	LOS C	3.3	88.3	0.92	1.06	26.4
2T	T	136	10.2	0.452	18.6	LOS B	3.3	88.3	0.92	1.02	28.4
2R	R	46	2.1	0.452	19.6	LOS B	3.3	88.3	0.92	1.03	28.2
Approach		203	8.8	0.452	19.7	LOS B	3.3	88.3	0.92	1.02	28.1
All Vehicles		2161	7.1	0.452	10.5	LOS B	3.3	88.3	0.58	0.71	31.7

Level of Service (LOS) Method: Delay & v/c (HCM 2010).
Roundabout LOS Method: Same as Signalised Intersections.
Vehicle movement LOS values are based on average delay and v/c ratio (degree of saturation) per movement
LOS F will result if v/c > 1 irrespective of movement delay value (does not apply for approaches and intersection).
Intersection and Approach LOS values are based on average delay for all movements (v/c not used as specified in HCM 2010).
Roundabout Capacity Model: SIDRA Standard.
SIDRA Standard Delay Model used.

Copyright © 2000-2011 Akcelik and Associates Pty Ltd
www.sidrasolutions.com

SIDRA INTERSECTION

MOVEMENT SUMMARY

Site: 2014 PM Full Build w/ HCSD

Roundabout with thru/left & right turn lanes on NB & SB approaches, 1-lane on EB & WB approaches, and 1 circulating lane

Roundabout

Movement Performance - Vehicles

Mov ID	Turn	Demand Flow veh/h	HV %	Deg. Satn v/c	Average Delay sec	Level of Service	95% Back of Queue Vehicles veh	95% Back of Queue Distance ft	Prop. Queued	Effective Stop Rate per veh	Average Speed mph
South: Hyland-Croy Rd											
3L	L	27	0.0	0.371	15.0	LOS B	2.2	54.1	0.45	0.89	32.1
8T	T	450	0.8	0.371	6.9	LOS A	2.2	54.1	0.45	0.53	35.1
8R	R	108	1.2	0.135	9.3	LOS A	0.6	14.6	0.41	0.63	34.2
Approach		584	0.8	0.371	7.7	LOS A	2.2	54.1	0.44	0.57	34.8
East: Brand Rd											
1L	L	119	1.7	0.400	13.4	LOS B	2.3	58.7	0.66	0.88	26.8
6T	T	62	1.0	0.400	6.4	LOS A	2.3	58.7	0.66	0.62	28.9
6R	R	156	0.0	0.400	7.4	LOS A	2.3	58.7	0.66	0.70	28.5
Approach		337	0.8	0.400	9.3	LOS A	2.3	58.7	0.66	0.75	27.9
North: Hyland-Croy Rd											
7L	L	84	0.0	0.229	13.7	LOS B	1.2	31.0	0.37	0.84	31.6
4T	T	206	4.6	0.229	6.7	LOS A	1.2	31.0	0.37	0.50	35.4
4R	R	8	0.0	0.009	8.7	LOS A	0.0	0.9	0.35	0.55	34.5
Approach		298	3.2	0.229	8.7	LOS A	1.2	31.0	0.37	0.59	34.1
West: Mitchell-Dewitt Rd											
5L	L	29	5.3	0.239	16.3	LOS B	1.2	29.7	0.52	0.90	31.4
2T	T	149	0.0	0.239	7.9	LOS A	1.2	29.7	0.52	0.61	34.5
2R	R	40	3.8	0.239	9.6	LOS A	1.2	29.7	0.52	0.70	34.1
Approach		218	1.4	0.239	9.3	LOS A	1.2	29.7	0.52	0.67	33.9
All Vehicles		1437	1.4	0.400	8.6	LOS A	2.3	58.7	0.49	0.63	32.7

Level of Service (LOS) Method: Delay & v/c (HCM 2010).
Roundabout LOS Method: Same as Signalised Intersections.
Vehicle movement LOS values are based on average delay and v/c ratio (degree of saturation) per movement
LOS F will result if v/c > 1 irrespective of movement delay value (does not apply for approaches and intersection).
Intersection and Approach LOS values are based on average delay for all movements (v/c not used as specified in HCM 2010).
Roundabout Capacity Model: SIDRA Standard.
SIDRA Standard Delay Model used.

Copyright © 2000-2011 Akcelik and Associates Pty Ltd
www.sidrasolutions.com

SIDRA INTERSECTION

MOVEMENT SUMMARY

Site: 2014 PM Full Build w/o HCSD

Roundabout with thru/left & right turn lanes on NB & SB approaches, 1-lane on EB & WB approaches, and 1 circulating lane
Roundabout

Movement Performance - Vehicles

Mov ID	Turn	Demand Flow veh/h	HV %	Deg. Satn v/c	Average Delay sec	Level of Service	95% Back of Queue Vehicles veh	95% Back of Queue Distance ft	Prop. Queued	Effective Stop Rate per veh	Average Speed mph
South: Hyland-Croy Rd											
3L	L	27	0.0	0.354	15.0	LOS B	2.0	50.8	0.43	0.89	32.1
8T	T	430	0.8	0.354	6.8	LOS A	2.0	50.8	0.43	0.53	35.2
8R	R	128	1.2	0.152	9.2	LOS A	0.7	16.8	0.41	0.63	34.2
Approach		584	0.9	0.354	7.7	LOS A	2.0	50.8	0.43	0.57	34.8
East: Brand Rd											
1L	L	127	1.7	0.396	13.3	LOS B	2.3	57.6	0.64	0.87	26.9
6T	T	64	1.0	0.396	6.2	LOS A	2.3	57.6	0.64	0.60	29.0
6R	R	149	0.0	0.396	7.2	LOS A	2.3	57.6	0.64	0.69	28.5
Approach		340	0.8	0.396	9.3	LOS A	2.3	57.6	0.64	0.74	27.9
North: Hyland-Croy Rd											
7L	L	78	0.0	0.220	13.8	LOS B	1.1	29.5	0.38	0.84	31.6
4T	T	198	4.6	0.220	6.7	LOS A	1.1	29.5	0.38	0.50	35.3
4R	R	6	0.0	0.007	8.7	LOS A	0.0	0.7	0.36	0.54	34.4
Approach		281	3.2	0.220	8.7	LOS A	1.1	29.5	0.38	0.60	34.2
West: Mitchell-Dewitt Rd											
5L	L	24	5.3	0.237	16.3	LOS B	1.2	29.4	0.51	0.90	31.4
2T	T	153	0.0	0.237	7.9	LOS A	1.2	29.4	0.51	0.61	34.5
2R	R	40	3.8	0.237	9.6	LOS A	1.2	29.4	0.51	0.70	34.2
Approach		218	1.3	0.237	9.1	LOS A	1.2	29.4	0.51	0.66	34.1
All Vehicles		1423	1.4	0.396	8.5	LOS A	2.3	57.6	0.48	0.63	32.7

Level of Service (LOS) Method: Delay & v/c (HCM 2010).
Roundabout LOS Method: Same as Signalised Intersections.
Vehicle movement LOS values are based on average delay and v/c ratio (degree of saturation) per movement
LOS F will result if v/c > 1 irrespective of movement delay value (does not apply for approaches and intersection).
Intersection and Approach LOS values are based on average delay for all movements (v/c not used as specified in HCM 2010).
Roundabout Capacity Model: SIDRA Standard.
SIDRA Standard Delay Model used.

Copyright © 2000-2011 Akcelik and Associates Pty Ltd
www.sidrasolutions.com

SIDRA INTERSECTION

MOVEMENT SUMMARY

Site: 2024 PM Full Build w/ HCSD

Roundabout with thru/left & right turn lanes on NB & SB approaches, 1-lane on EB & WB approaches, and 1 circulating lane

Roundabout

Movement Performance - Vehicles

Mov ID	Turn	Demand Flow veh/h	HV %	Deg. Satn v/c	Average Delay sec	Level of Service	95% Back of Queue Vehicles veh	95% Back of Queue Distance ft	Prop. Queued	Effective Stop Rate per veh	Average Speed mph
South: Hyland-Croy Rd											
3L	L	43	0.0	0.890	25.1	LOS C	17.4	438.0	1.00	1.14	27.3
8T	T	938	0.8	0.890	16.9	LOS B	17.4	438.0	1.00	1.14	29.4
8R	R	169	1.2	0.252	11.0	LOS B	1.2	31.4	0.60	0.76	33.3
Approach		1150	0.8	0.890	16.4	LOS B	17.4	438.0	0.94	1.08	29.8
East: Brand Rd											
1L	L	190	1.7	1.714	354.2	LOS F	99.2	2492.6	1.00	3.72	3.6
6T	T	104	1.0	1.714	347.2	LOS F	99.2	2492.6	1.00	3.73	3.5
6R	R	336	0.0	1.714	348.1	LOS F	99.2	2492.6	1.00	3.74	3.4
Approach		630	0.7	1.714	349.8	LOS F	99.2	2492.6	1.00	3.73	3.5
North: Hyland-Croy Rd											
7L	L	210	0.0	0.557	14.1	LOS B	4.4	113.2	0.55	0.81	31.5
4T	T	507	4.6	0.557	7.1	LOS A	4.4	113.2	0.55	0.54	34.2
4R	R	16	0.0	0.019	8.8	LOS A	0.1	2.0	0.38	0.56	34.4
Approach		732	3.2	0.557	9.1	LOS A	4.4	113.2	0.55	0.62	33.3
West: Mitchell-Dewitt Rd											
5L	L	44	5.3	0.552	23.6	LOS C	4.5	113.8	0.89	1.08	27.7
2T	T	221	0.0	0.552	15.2	LOS B	4.5	113.8	0.89	1.02	30.1
2R	R	61	3.8	0.552	16.9	LOS B	4.5	113.8	0.89	1.04	29.9
Approach		327	1.4	0.552	16.7	LOS B	4.5	113.8	0.89	1.03	29.7
All Vehicles		2839	1.5	1.714	88.5	LOS F	99.2	2492.6	0.85	1.54	11.6

Level of Service (LOS) Method: Delay & v/c (HCM 2010).
Roundabout LOS Method: Same as Signalised Intersections.
Vehicle movement LOS values are based on average delay and v/c ratio (degree of saturation) per movement
LOS F will result if v/c > 1 irrespective of movement delay value (does not apply for approaches and intersection).
Intersection and Approach LOS values are based on average delay for all movements (v/c not used as specified in HCM 2010).
Roundabout Capacity Model: SIDRA Standard.
SIDRA Standard Delay Model used.

Copyright © 2000-2011 Akcelik and Associates Pty Ltd
www.sidrasolutions.com

SIDRA INTERSECTION

MOVEMENT SUMMARY

Site: 2024 PM Full Build w/o HCSD

Roundabout with thru/left & right turn lanes on NB & SB approaches, 1-lane on EB & WB approaches, and 1 circulating lane

Roundabout

Movement Performance - Vehicles

Mov ID	Turn	Demand Flow veh/h	HV %	Deg. Satn v/c	Average Delay sec	Level of Service	95% Back of Queue Vehicles veh	95% Back of Queue Distance ft	Prop. Queued	Effective Stop Rate per veh	Average Speed mph
South: Hyland-Croy Rd											
3L	L	43	0.0	0.868	23.6	LOS C	15.6	391.8	0.99	1.09	28.0
8T	T	918	0.8	0.868	15.5	LOS B	15.6	391.8	0.99	1.09	30.3
8R	R	189	1.2	0.280	11.0	LOS B	1.4	35.6	0.61	0.77	33.2
Approach		1150	0.8	0.868	15.0	LOS B	15.6	391.8	0.93	1.04	30.6
East: Brand Rd											
1L	L	198	1.7	1.645	322.6	LOS F	94.5	2375.2	1.00	3.68	4.0
6T	T	107	1.0	1.645	315.5	LOS F	94.5	2375.2	1.00	3.69	3.9
6R	R	329	0.0	1.645	316.5	LOS F	94.5	2375.2	1.00	3.70	3.7
Approach		633	0.7	1.645	318.2	LOS F	94.5	2375.2	1.00	3.69	3.8
North: Hyland-Croy Rd											
7L	L	203	0.0	0.553	14.2	LOS B	4.4	111.7	0.57	0.81	31.5
4T	T	499	4.6	0.553	7.1	LOS A	4.4	111.7	0.57	0.54	34.1
4R	R	13	0.0	0.017	8.8	LOS A	0.1	1.8	0.39	0.56	34.3
Approach		716	3.2	0.553	9.2	LOS A	4.4	111.7	0.56	0.62	33.3
West: Mitchell-Dewitt Rd											
5L	L	40	5.3	0.549	23.4	LOS C	4.5	112.7	0.89	1.08	27.8
2T	T	226	0.0	0.549	15.0	LOS B	4.5	112.7	0.89	1.02	30.3
2R	R	61	3.8	0.549	16.7	LOS B	4.5	112.7	0.89	1.03	30.0
Approach		327	1.4	0.549	16.4	LOS B	4.5	112.7	0.89	1.03	29.9
All Vehicles		2826	1.5	1.645	81.7	LOS F	94.5	2375.2	0.85	1.52	12.3

Level of Service (LOS) Method: Delay & v/c (HCM 2010).
Roundabout LOS Method: Same as Signalised Intersections.
Vehicle movement LOS values are based on average delay and v/c ratio (degree of saturation) per movement
LOS F will result if v/c > 1 irrespective of movement delay value (does not apply for approaches and intersection).
Intersection and Approach LOS values are based on average delay for all movements (v/c not used as specified in HCM 2010).
Roundabout Capacity Model: SIDRA Standard.
SIDRA Standard Delay Model used.

Copyright © 2000-2011 Akcelik and Associates Pty Ltd
www.sidrasolutions.com

MOVEMENT SUMMARY

Site: 2024 PM Full Build w/ HCSD - Expanded

Roundabout with thru/left & thru/right lanes on NB & SB approaches, 1-lane on EB & WB approaches, 2 circulating lanes NB & SB, and 1 circulating lane EB & WB

Roundabout

Movement Performance - Vehicles

Mov ID	Turn	Demand Flow veh/h	HV %	Deg. Satn v/c	Average Delay sec	Level of Service	95% Back of Queue Vehicles veh	95% Back of Queue Distance ft	Prop. Queued	Effective Stop Rate per veh	Average Speed mph
South: Hyland-Croy Rd											
3L	L	43	0.0	0.555	17.7	LOS B	4.3	108.0	0.71	0.96	30.7
8T	T	938	0.8	0.555	9.4	LOS A	4.4	110.5	0.70	0.76	33.4
8R	R	169	1.2	0.555	10.8	LOS B	4.4	110.5	0.70	0.81	33.4
Approach		1150	0.8	0.555	9.9	LOS A	4.4	110.5	0.70	0.77	33.3
East: Brand Rd											
1L	L	190	1.7	1.017	41.4	LOS F	18.4	462.7	1.00	1.78	17.8
6T	T	104	1.0	1.017	34.6	LOS F	18.4	462.7	1.00	1.78	18.5
6R	R	336	0.0	1.017	35.2	LOS F	18.4	462.7	1.00	1.78	17.9
Approach		630	0.7	1.017	37.0	LOS D	18.4	462.7	1.00	1.78	18.0
North: Hyland-Croy Rd											
7L	L	210	0.0	0.342	14.6	LOS B	2.1	53.4	0.56	0.80	30.8
4T	T	507	4.6	0.342	7.6	LOS A	2.2	55.8	0.56	0.57	34.2
4R	R	16	0.0	0.342	9.0	LOS A	2.2	55.8	0.56	0.68	34.1
Approach		732	3.2	0.342	9.6	LOS A	2.2	55.8	0.56	0.64	33.1
West: Mitchell-Dewitt Rd											
5L	L	44	5.3	0.481	18.3	LOS B	2.3	59.0	0.67	1.02	30.3
2T	T	221	0.0	0.481	10.1	LOS B	2.3	59.0	0.67	0.81	33.5
2R	R	61	3.8	0.481	11.4	LOS B	2.3	59.0	0.67	0.88	33.5
Approach		327	1.4	0.481	11.4	LOS B	2.3	59.0	0.67	0.85	33.0
All Vehicles		2839	1.5	1.017	16.0	LOS B	18.4	462.7	0.73	0.97	28.2

Level of Service (LOS) Method: Delay & v/c (HCM 2010).
Roundabout LOS Method: Same as Signalised Intersections.
Vehicle movement LOS values are based on average delay and v/c ratio (degree of saturation) per movement
LOS F will result if v/c > 1 irrespective of movement delay value (does not apply for approaches and intersection).
Intersection and Approach LOS values are based on average delay for all movements (v/c not used as specified in HCM 2010).
Roundabout Capacity Model: SIDRA Standard.
SIDRA Standard Delay Model used.

Copyright © 2000-2011 Akcelik and Associates Pty Ltd
www.sidrasolutions.com

MOVEMENT SUMMARY

Site: 2024 PM Full Build w/o HCSD - Expanded

Roundabout with thru/left & thru/right lanes on NB & SB approaches, 1-lane on EB & WB approaches, 2 circulating lanes NB & SB, and 1 circulating lane EB & WB

Roundabout

Movement Performance - Vehicles

Mov ID	Turn	Demand Flow veh/h	HV %	Deg. Satn v/c	Average Delay sec	Level of Service	95% Back of Queue Vehicles veh	95% Back of Queue Distance ft	Prop. Queued	Effective Stop Rate per veh	Average Speed mph
South: Hyland-Croy Rd											
3L	L	43	0.0	0.553	17.6	LOS B	4.2	106.8	0.70	0.95	30.8
8T	T	918	0.8	0.553	9.3	LOS A	4.3	109.2	0.70	0.75	33.4
8R	R	189	1.2	0.553	10.7	LOS B	4.3	109.2	0.69	0.80	33.4
Approach		1150	0.8	0.553	9.9	LOS A	4.3	109.2	0.70	0.76	33.3
East: Brand Rd											
1L	L	198	1.7	1.007	38.6	LOS F	17.4	438.2	1.00	1.72	18.4
6T	T	107	1.0	1.007	31.8	LOS F	17.4	438.2	1.00	1.72	19.2
6R	R	329	0.0	1.007	32.4	LOS F	17.4	438.2	1.00	1.72	18.7
Approach		633	0.7	1.007	34.2	LOS C	17.4	438.2	1.00	1.72	18.7
North: Hyland-Croy Rd											
7L	L	203	0.0	0.338	14.6	LOS B	2.1	52.8	0.57	0.80	30.8
4T	T	499	4.6	0.338	7.7	LOS A	2.1	55.2	0.57	0.58	34.1
4R	R	13	0.0	0.338	9.1	LOS A	2.1	55.2	0.56	0.68	34.1
Approach		716	3.2	0.338	9.7	LOS A	2.1	55.2	0.57	0.64	33.1
West: Mitchell-Dewitt Rd											
5L	L	40	5.3	0.480	18.3	LOS B	2.3	59.2	0.67	1.02	30.3
2T	T	226	0.0	0.480	10.1	LOS B	2.3	59.2	0.67	0.81	33.5
2R	R	61	3.8	0.480	11.4	LOS B	2.3	59.2	0.67	0.88	33.5
Approach		327	1.4	0.480	11.3	LOS B	2.3	59.2	0.67	0.85	33.0
All Vehicles		2826	1.5	1.007	15.4	LOS B	17.4	438.2	0.73	0.96	28.5

Level of Service (LOS) Method: Delay & v/c (HCM 2010).
Roundabout LOS Method: Same as Signalised Intersections.
Vehicle movement LOS values are based on average delay and v/c ratio (degree of saturation) per movement
LOS F will result if v/c > 1 irrespective of movement delay value (does not apply for approaches and intersection).
Intersection and Approach LOS values are based on average delay for all movements (v/c not used as specified in HCM 2010).
Roundabout Capacity Model: SIDRA Standard.
SIDRA Standard Delay Model used.

Copyright © 2000-2011 Akcelik and Associates Pty Ltd
www.sidrasolutions.com

MOVEMENT SUMMARY

Site: 2024 PM Full Build w/ HCSD - Expanded w/ WBRT

Roundabout with thru/left & thru/right lanes on NB & SB approaches, 1-lane on EB approach, thru/left & right turn lane on WB approach, 2 circulating lanes NB & SB, and 1 circulating lane EB & WB

Roundabout

Movement Performance - Vehicles

Mov ID	Turn	Demand Flow veh/h	HV %	Deg. Satn v/c	Average Delay sec	Level of Service	95% Back of Queue Vehicles veh	95% Back of Queue Distance ft	Prop. Queued	Effective Stop Rate per veh	Average Speed mph
South: Hyland-Croy Rd											
3L	L	43	0.0	0.895	25.4	LOS C	17.8	448.7	1.00	1.14	27.1
8T	T	938	0.8	0.895	17.2	LOS B	17.8	448.7	1.00	1.15	29.2
8R	R	169	1.2	0.253	11.0	LOS B	1.3	31.8	0.60	0.77	33.3
Approach		1150	0.8	0.895	16.6	LOS B	17.8	448.7	0.94	1.09	29.6
East: Brand Rd											
1L	L	190	1.7	0.756	33.7	LOS C	8.4	211.6	1.00	1.24	19.5
6T	T	104	1.0	0.756	26.7	LOS C	8.4	211.6	1.00	1.24	20.5
6R	R	336	0.0	0.693	22.2	LOS C	8.0	200.7	1.00	1.19	21.9
Approach		630	0.7	0.756	26.4	LOS C	8.4	211.6	1.00	1.21	20.9
North: Hyland-Croy Rd											
7L	L	210	0.0	0.626	15.5	LOS B	5.8	149.4	0.73	0.86	31.0
4T	T	507	4.6	0.626	8.5	LOS A	5.8	149.4	0.73	0.67	33.1
4R	R	16	0.0	0.021	9.4	LOS A	0.1	2.4	0.47	0.60	33.9
Approach		732	3.2	0.626	10.5	LOS B	5.8	149.4	0.72	0.72	32.5
West: Mitchell-Dewitt Rd											
5L	L	44	5.3	0.632	27.6	LOS C	5.8	147.4	0.96	1.13	25.9
2T	T	221	0.0	0.632	19.2	LOS B	5.8	147.4	0.96	1.11	27.8
2R	R	61	3.8	0.632	20.9	LOS C	5.8	147.4	0.96	1.11	27.6
Approach		327	1.4	0.632	20.6	LOS C	5.8	147.4	0.96	1.11	27.5
All Vehicles		2839	1.5	0.895	17.7	LOS B	17.8	448.7	0.90	1.03	27.6

Level of Service (LOS) Method: Delay & v/c (HCM 2010).
Roundabout LOS Method: Same as Signalised Intersections.
Vehicle movement LOS values are based on average delay and v/c ratio (degree of saturation) per movement
LOS F will result if v/c > 1 irrespective of movement delay value (does not apply for approaches and intersection).
Intersection and Approach LOS values are based on average delay for all movements (v/c not used as specified in HCM 2010).
Roundabout Capacity Model: SIDRA Standard.
SIDRA Standard Delay Model used.

Copyright © 2000-2011 Akcelik and Associates Pty Ltd
www.sidrasolutions.com

MOVEMENT SUMMARY

Site: 2024 PM Full Build w/o HCSD - Expanded w/ WBRT

Roundabout with thru/left & thru/right lanes on NB & SB approaches, 1-lane on EB approach, thru/left & right turn lane on WB approach, 2 circulating lanes NB & SB, and 1 circulating lane EB & WB

Roundabout

Movement Performance - Vehicles

Mov ID	Turn	Demand Flow veh/h	HV %	Deg. Satn v/c	Average Delay sec	Level of Service	95% Back of Queue Vehicles veh	95% Back of Queue Distance ft	Prop. Queued	Effective Stop Rate per veh	Average Speed mph
South: Hyland-Croy Rd											
3L	L	43	0.0	0.872	23.9	LOS C	15.9	400.2	1.00	1.10	27.9
8T	T	918	0.8	0.872	15.7	LOS B	15.9	400.2	1.00	1.10	30.1
8R	R	189	1.2	0.282	11.0	LOS B	1.4	36.1	0.61	0.77	33.2
Approach		1150	0.8	0.872	15.2	LOS B	15.9	400.2	0.94	1.05	30.5
East: Brand Rd											
1L	L	198	1.7	0.744	31.5	LOS C	8.2	206.5	1.00	1.22	20.1
6T	T	107	1.0	0.744	24.5	LOS C	8.2	206.5	1.00	1.22	21.2
6R	R	329	0.0	0.653	19.4	LOS B	7.2	179.1	1.00	1.16	23.0
Approach		633	0.7	0.744	24.0	LOS C	8.2	206.5	1.00	1.19	21.7
North: Hyland-Croy Rd											
7L	L	203	0.0	0.620	15.6	LOS B	5.7	146.7	0.73	0.86	31.0
4T	T	499	4.6	0.620	8.5	LOS A	5.7	146.7	0.73	0.68	33.1
4R	R	13	0.0	0.018	9.5	LOS A	0.1	2.0	0.48	0.60	33.8
Approach		716	3.2	0.620	10.5	LOS B	5.7	146.7	0.72	0.73	32.4
West: Mitchell-Dewitt Rd											
5L	L	40	5.3	0.624	27.1	LOS C	5.7	144.1	0.95	1.12	26.1
2T	T	226	0.0	0.624	18.7	LOS B	5.7	144.1	0.95	1.10	28.1
2R	R	61	3.8	0.624	20.4	LOS C	5.7	144.1	0.95	1.10	27.9
Approach		327	1.4	0.624	20.1	LOS C	5.7	144.1	0.95	1.10	27.8
All Vehicles		2826	1.5	0.872	16.6	LOS B	15.9	400.2	0.90	1.00	28.2

Level of Service (LOS) Method: Delay & v/c (HCM 2010).
Roundabout LOS Method: Same as Signalised Intersections.
Vehicle movement LOS values are based on average delay and v/c ratio (degree of saturation) per movement
LOS F will result if v/c > 1 irrespective of movement delay value (does not apply for approaches and intersection).
Intersection and Approach LOS values are based on average delay for all movements (v/c not used as specified in HCM 2010).
Roundabout Capacity Model: SIDRA Standard.
SIDRA Standard Delay Model used.

Copyright © 2000-2011 Akcelik and Associates Pty Ltd
www.sidrasolutions.com

SIDRA INTERSECTION

HYLAND-CROY ROAD / POST ROAD

5

TWO-WAY STOP CONTROL SUMMARY

General Information		Site Information	
Analyst	JMH	Intersection	Hyland-Croy/Post
Agency/Co.	EMHT	Jurisdiction	Dublin
Date Performed	10/13/2014	Analysis Year	2014 Full Build - SCHOOL
Analysis Time Period	AM Peak		

Project Description	20131358 Riviera TIS
East/West Street: Post Rd	North/South Street: Hyland-Croy Rd
Intersection Orientation: East-West	Study Period (hrs): 0.25

Vehicle Volumes and Adjustments

Major Street	Eastbound			Westbound		
Movement	1	2	3	4	5	6
	L	T	R	L	T	R
Volume (veh/h)	202	555			284	82
Peak-Hour Factor, PHF	0.90	0.90	0.90	0.90	0.90	0.90
Hourly Flow Rate, HFR (veh/h)	224	616	0	0	315	91
Percent Heavy Vehicles	4	--	--	0	--	--
Median Type	Undivided					
RT Channelized			0			0
Lanes	1	2	0	0	2	0
Configuration	L	T			T	TR
Upstream Signal		0			0	

Minor Street	Northbound			Southbound		
Movement	7	8	9	10	11	12
	L	T	R	L	T	R
Volume (veh/h)				176		271
Peak-Hour Factor, PHF	0.90	0.90	0.90	0.90	0.90	0.90
Hourly Flow Rate, HFR (veh/h)	0	0	0	195	0	301
Percent Heavy Vehicles	0	0	0	1	0	2
Percent Grade (%)		0			0	
Flared Approach		N			N	
Storage		0			0	
RT Channelized			0			0
Lanes	0	0	0	0	0	0
Configuration					LR	

Delay, Queue Length, and Level of Service

Approach	Eastbound	Westbound	Northbound			Southbound		
Movement	1	4	7	8	9	10	11	12
Lane Configuration	L						LR	
v (veh/h)	224						496	
C (m) (veh/h)	1135						319	
v/c	0.20						1.55	
95% queue length	0.73						28.62	
Control Delay (s/veh)	9.0						294.4	
LOS	A						F	
Approach Delay (s/veh)	--	--				294.4		
Approach LOS	--	--				F		

Copyright © 2007 University of Florida, All Rights Reserved HCS+™ Version 5.3 Generated: 10/15/2014 11:23 AM

HCS 2010 Signalized Intersection Results Summary

5

General Information				Intersection Information	
Agency	EMHT			Duration, h	0.25
Analyst	JMH	Analysis Date	Oct 13, 2014	Area Type	Other
Jurisdiction	Dublin	Time Period	AM Peak - Full Build - SCHOOL	PHF	0.90
Intersection	Hyland-Croy / Post Rd	Analysis Year	2014	Analysis Period	1> 7:00
File Name	2014 AM Full Build.xus				
Project Description	20131358 Riviera TIS				

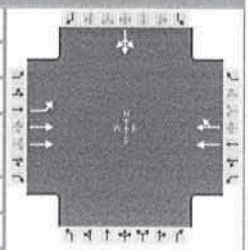

Demand Information	EB			WB			NB			SB		
Approach Movement	L	T	R	L	T	R	L	T	R	L	T	R
Demand (*v*), veh/h	202	555			284	82				176	0	271

Signal Information			
Cycle, s	120.0	Reference Phase	2
Offset, s	0	Reference Point	End
Uncoordinated	No	Simult. Gap E/W	On
Force Mode	Fixed	Simult. Gap N/S	On

Green	9.9	56.8	38.3	0.0	0.0	0.0
Yellow	4.0	4.0	4.0	0.0	0.0	0.0
Red	1.0	1.0	1.0	0.0	0.0	0.0

Timer Results	EBL	EBT	WBL	WBT	NBL	NBT	SBL	SBT
Assigned Phase	5	2		6				4
Case Number	1.0	4.0		8.3				12.0
Phase Duration, s	14.9	76.7		61.8				43.3
Change Period, ($Y+R_c$), s	5.0	5.0		5.0				5.0
Max Allow Headway (*MAH*), s	3.1	0.0		0.0				3.3
Queue Clearance Time (g_s), s	9.6							37.2
Green Extension Time (g_e), s	0.3	0.0		0.0				1.1
Phase Call Probability	1.00							1.00
Max Out Probability	0.00							0.00

Movement Group Results	EB			WB			NB			SB		
Approach Movement	L	T	R	L	T	R	L	T	R	L	T	R
Assigned Movement	5	2			6	16				7	4	14
Adjusted Flow Rate (*v*), veh/h	224	617			209	198					497	
Adjusted Saturation Flow Rate (*s*), veh/h/ln	1740	1791			1881	1737					1650	
Queue Service Time (g_s), s	7.6	10.0			9.7	8.1					35.2	
Cycle Queue Clearance Time (g_c), s	7.6	10.0			9.7	8.1					35.2	
Green Ratio (*g/C*)	0.57	0.60			0.47	0.47					0.32	
Capacity (*c*), veh/h	579	2141			890	822					526	
Volume-to-Capacity Ratio (*X*)	0.388	0.288			0.235	0.241					0.943	
Available Capacity (c_a), veh/h	793	2141			890	822					784	
Back of Queue (*Q*), veh/ln (50th percentile)	2.9	3.9			3.6	3.4					15.7	
Queue Storage Ratio (*RQ*) (50th percentile)	0.00	0.00			0.00	0.00					0.00	
Uniform Delay (d_1), s/veh	13.3	11.7			18.7	18.8					39.8	
Incremental Delay (d_2), s/veh	0.2	0.3			0.6	0.7					12.5	
Initial Queue Delay (d_3), s/veh	0.0	0.0			0.0	0.0					0.0	
Control Delay (*d*), s/veh	13.5	12.1			19.4	19.5					52.3	
Level of Service (LOS)	B	B			B	B					D	
Approach Delay, s/veh / LOS	12.5	B		19.4	B		0.0			52.3	D	
Intersection Delay, s/veh / LOS	25.4						C					

Multimodal Results	EB		WB		NB		SB	
Pedestrian LOS Score / LOS	1.9	A	2.1	B	2.8	C	2.9	C
Bicycle LOS Score / LOS	1.2	A	0.8	A			1.3	A

Copyright © 2014 University of Florida, All Rights Reserved.

5

TWO-WAY STOP CONTROL SUMMARY

General Information		Site Information	
Analyst	JMH	Intersection	Hyland-Croy/Post
Agency/Co.	EMHT	Jurisdiction	Dublin
Date Performed	10/13/2014	Analysis Year	2024 Full Build - SCHOOL
Analysis Time Period	AM Peak		

Project Description	20131358 Riviera TIS
East/West Street: Post Rd	North/South Street: Hyland-Croy Rd
Intersection Orientation: East-West	Study Period (hrs): 0.25

Vehicle Volumes and Adjustments

Major Street	Eastbound			Westbound		
Movement	1	2	3	4	5	6
	L	T	R	L	T	R
Volume (veh/h)	376	783			400	158
Peak-Hour Factor, PHF	0.90	0.90	0.90	0.90	0.90	0.90
Hourly Flow Rate, HFR (veh/h)	417	870	0	0	444	175
Percent Heavy Vehicles	4	--	--	0	--	--
Median Type	Undivided					
RT Channelized			0			0
Lanes	1	2	0	0	2	0
Configuration	L	T			T	TR
Upstream Signal		0			0	

Minor Street	Northbound			Southbound		
Movement	7	8	9	10	11	12
	L	T	R	L	T	R
Volume (veh/h)				310		612
Peak-Hour Factor, PHF	0.90	0.90	0.90	0.90	0.90	0.90
Hourly Flow Rate, HFR (veh/h)	0	0	0	344	0	680
Percent Heavy Vehicles	0	0	0	1	0	2
Percent Grade (%)		0			0	
Flared Approach		N			N	
Storage		0			0	
RT Channelized			0			0
Lanes	0	0	0	0	0	0
Configuration					LR	

Delay, Queue Length, and Level of Service

Approach	Eastbound	Westbound	Northbound			Southbound		
Movement	1	4	7	8	9	10	11	12
Lane Configuration	L						LR	
v (veh/h)	417						1024	
C (m) (veh/h)	944						107	
v/c	0.44						9.57	
95% queue length	2.29						117.88	
Control Delay (s/veh)	11.8						3932	
LOS	B						F	
Approach Delay (s/veh)	--	--	3932					
Approach LOS	--	--	F					

Copyright © 2007 University of Florida, All Rights Reserved

HCS+™ Version 5.3

Generated: 10/16/2014 8:26 AM

HCS 2010 Signalized Intersection Results Summary

General Information				Intersection Information	
Agency	EMHT			Duration, h	0.25
Analyst	JMH	Analysis Date	Oct 13, 2014	Area Type	Other
Jurisdiction	Dublin	Time Period	AM Peak - Full Build - SCHOOL	PHF	0.90
Intersection	Hyland-Croy / Post Rd	Analysis Year	2024	Analysis Period	1> 7:00
File Name	2024 AM Full Build.xus				
Project Description	20131358 Riviera TIS				

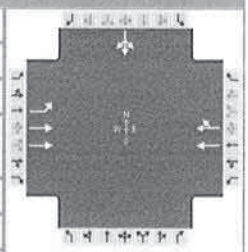

Demand Information	EB			WB			NB			SB		
Approach Movement	L	T	R	L	T	R	L	T	R	L	T	R
Demand (*v*), veh/h	376	783			400	158				310	0	612

Signal Information			
Cycle, s	120.0	Reference Phase	2
Offset, s	0	Reference Point	End
Uncoordinated	No	Simult. Gap E/W	On
Force Mode	Fixed	Simult. Gap N/S	On

Green	11.0	27.0	67.0	0.0	0.0	0.0
Yellow	4.0	4.0	4.0	0.0	0.0	0.0
Red	1.0	1.0	1.0	0.0	0.0	0.0

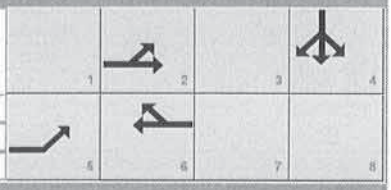

Timer Results	EBL	EBT	WBL	WBT	NBL	NBT	SBL	SBT
Assigned Phase	5	2		6				4
Case Number	1.0	4.0		8.3				12.0
Phase Duration, s	16.0	48.0		32.0				72.0
Change Period, ($Y+R_c$), s	5.0	5.0		5.0				5.0
Max Allow Headway (*MAH*), s	3.1	0.0		0.0				3.3
Queue Clearance Time (g_s), s	13.0							69.0
Green Extension Time (g_e), s	0.0	0.0		0.0				0.0
Phase Call Probability	1.00							1.00
Max Out Probability	1.00							1.00

Movement Group Results	EB			WB			NB			SB		
Approach Movement	L	T	R	L	T	R	L	T	R	L	T	R
Assigned Movement	5	2			6	16				7	4	14
Adjusted Flow Rate (*v*), veh/h	418	870			324	296					1024	
Adjusted Saturation Flow Rate (*s*), veh/h/ln	1740	1791			1881	1700					1639	
Queue Service Time (g_s), s	11.0	24.7			19.0	19.6					67.0	
Cycle Queue Clearance Time (g_c), s	11.0	24.7			19.0	19.6					67.0	
Green Ratio (*g/C*)	0.33	0.36			0.22	0.22					0.56	
Capacity (*c*), veh/h	268	1283			423	382					915	
Volume-to-Capacity Ratio (*X*)	1.561	0.678			0.765	0.775					1.119	
Available Capacity (c_a), veh/h	268	1283			423	382					915	
Back of Queue (*Q*), veh/ln (50th percentile)	22.8	11.0			10.3	9.7					41.4	
Queue Storage Ratio (*RQ*) (50th percentile)	0.00	0.00			0.00	0.00					0.00	
Uniform Delay (d_1), s/veh	38.8	32.6			43.5	43.6					26.5	
Incremental Delay (d_2), s/veh	269.8	2.9			12.4	14.2					68.2	
Initial Queue Delay (d_3), s/veh	0.0	0.0			0.0	0.0					0.0	
Control Delay (*d*), s/veh	308.5	35.5			55.9	57.8					94.7	
Level of Service (LOS)	F	D			E	E					F	
Approach Delay, s/veh / LOS	124.1	F		56.8	E		0.0			94.7	F	
Intersection Delay, s/veh / LOS	99.6						F					

Multimodal Results	EB		WB		NB		SB	
Pedestrian LOS Score / LOS	1.9	A	2.1	B	2.8	C	2.9	C
Bicycle LOS Score / LOS	1.6	A	1.0	A			2.2	B

Copyright © 2014 University of Florida, All Rights Reserved.

HCS 2010 Signalized Intersection Results Summary

5

General Information				Intersection Information	
Agency	EMHT			Duration, h	0.25
Analyst	JMH	Analysis Date	Oct 13, 2014	Area Type	Other
Jurisdiction	Dublin	Time Period	AM Peak - Full Build - SCHOOL	PHF	0.90
Intersection	Hyland-Croy / Post Rd	Analysis Year	2024	Analysis Period	1> 7:00
File Name	2024 AM Full Build.xus				
Project Description	20131358 Riviera TIS				

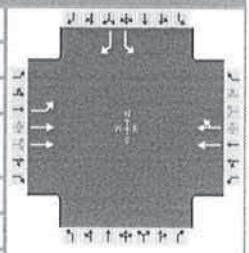

Demand Information	EB			WB			NB			SB		
Approach Movement	L	T	R	L	T	R	L	T	R	L	T	R
Demand (*v*), veh/h	376	783			400	158				310		612

Signal Information			
Cycle, s	120.0	Reference Phase	2
Offset, s	0	Reference Point	End
Uncoordinated	No	Simult. Gap E/W	On
Force Mode	Fixed	Simult. Gap N/S	On

Green	21.0	39.6	44.5	0.0	0.0	0.0
Yellow	4.0	4.0	4.0	0.0	0.0	0.0
Red	1.0	1.0	1.0	0.0	0.0	0.0

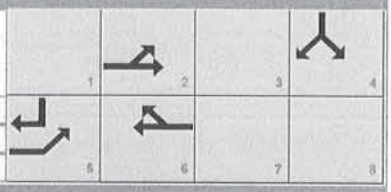

Timer Results	EBL	EBT	WBL	WBT	NBL	NBT	SBL	SBT
Assigned Phase	5	2		6				4
Case Number	1.0	4.0		8.3				9.0
Phase Duration, s	26.0	70.5		44.6				49.5
Change Period, ($Y+R_c$), s	5.0	5.0		5.0				5.0
Max Allow Headway (*MAH*), s	3.1	0.0		0.0				3.3
Queue Clearance Time (g_s), s	20.2							41.9
Green Extension Time (g_e), s	0.8	0.0		0.0				2.5
Phase Call Probability	1.00							1.00
Max Out Probability	0.00							0.00

Movement Group Results	EB			WB			NB			SB		
Approach Movement	L	T	R	L	T	R	L	T	R	L	T	R
Assigned Movement	5	2			6	16				7		14
Adjusted Flow Rate (*v*), veh/h	418	870			324	296				344		680
Adjusted Saturation Flow Rate (*s*), veh/h/ln	1740	1791			1881	1700				1810		1610
Queue Service Time (g_s), s	18.2	17.5			20.4	17.0				17.8		39.9
Cycle Queue Clearance Time (g_c), s	18.2	17.5			20.4	17.0				17.8		39.9
Green Ratio (*g/C*)	0.52	0.55			0.33	0.33				0.37		0.55
Capacity (*c*), veh/h	489	1956			621	561				670		878
Volume-to-Capacity Ratio (*X*)	0.854	0.445			0.522	0.528				0.514		0.775
Available Capacity (c_a), veh/h	773	1956			621	561				965		1140
Back of Queue (*Q*), veh/ln (50th percentile)	7.5	7.1			8.1	7.5				7.6		14.6
Queue Storage Ratio (*RQ*) (50th percentile)	0.00	0.00			0.00	0.00				0.00		0.00
Uniform Delay (d_1), s/veh	22.4	16.3			32.5	32.6				29.4		21.5
Incremental Delay (d_2), s/veh	3.2	0.7			3.1	3.5				0.2		1.8
Initial Queue Delay (d_3), s/veh	0.0	0.0			0.0	0.0				0.0		0.0
Control Delay (*d*), s/veh	25.6	17.1			35.7	36.2				29.6		23.3
Level of Service (LOS)	C	B			D	D				C		C
Approach Delay, s/veh / LOS	19.8	B		35.9	D		0.0			25.4	C	
Intersection Delay, s/veh / LOS	25.2						C					

Multimodal Results	EB		WB		NB		SB	
Pedestrian LOS Score / LOS	0.7	A	2.3	B	2.8	C	2.9	C
Bicycle LOS Score / LOS	1.6	A	1.0	A				F

Copyright © 2014 University of Florida, All Rights Reserved.

HCS 2010 Signalized Intersection Results Summary

5

General Information				Intersection Information	
Agency	EMHT			Duration, h	0.25
Analyst	JMH	Analysis Date	Oct 13, 2014	Area Type	Other
Jurisdiction	Dublin	Time Period	AM Peak - Full Build - SCHOOL	PHF	0.90
Intersection	Hyland-Croy / Post Rd	Analysis Year	2024	Analysis Period	1> 7:00
File Name	2024 AM Full Build.xus				
Project Description	20131358 Riviera TIS				

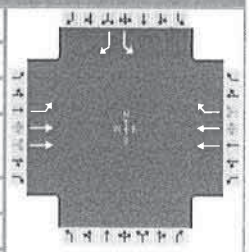

Demand Information	EB			WB			NB			SB		
Approach Movement	L	T	R	L	T	R	L	T	R	L	T	R
Demand (*v*), veh/h	376	783			400	158				310		612

Signal Information			
Cycle, s	120.0	Reference Phase	2
Offset, s	0	Reference Point	End
Uncoordinated	No	Simult. Gap E/W	On
Force Mode	Fixed	Simult. Gap N/S	On

Green	21.0	39.5	44.5	0.0	0.0	0.0
Yellow	4.0	4.0	4.0	0.0	0.0	0.0
Red	1.0	1.0	1.0	0.0	0.0	0.0

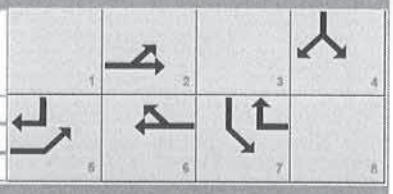

Timer Results	EBL	EBT	WBL	WBT	NBL	NBT	SBL	SBT
Assigned Phase	5	2		6				4
Case Number	1.0	4.0		7.3				9.0
Phase Duration, s	26.0	70.5		44.5				49.5
Change Period, ($Y+R_c$), s	5.0	5.0		5.0				5.0
Max Allow Headway (*MAH*), s	3.1	0.0		0.0				3.3
Queue Clearance Time (g_s), s	20.2							41.9
Green Extension Time (g_e), s	0.8	0.0		0.0				2.6
Phase Call Probability	1.00							1.00
Max Out Probability	0.00							0.00

Movement Group Results	EB			WB			NB			SB		
Approach Movement	L	T	R	L	T	R	L	T	R	L	T	R
Assigned Movement	5	2			6	16				7		14
Adjusted Flow Rate (*v*), veh/h	418	870			444	176				344		680
Adjusted Saturation Flow Rate (*s*), veh/h/ln	1740	1791			1791	1610				1810		1610
Queue Service Time (g_s), s	18.2	17.5			11.4	4.4				17.8		39.9
Cycle Queue Clearance Time (g_c), s	18.2	17.5			11.4	4.4				17.8		39.9
Green Ratio (*g/C*)	0.52	0.55			0.33	0.70				0.37		0.55
Capacity (*c*), veh/h	581	1956			1180	1127				671		878
Volume-to-Capacity Ratio (*X*)	0.719	0.445			0.377	0.156				0.514		0.774
Available Capacity (c_a), veh/h	1082	1956			1180	1127				1282		1422
Back of Queue (*Q*), veh/ln (50th percentile)	7.1	7.1			5.0	1.4				7.6		14.3
Queue Storage Ratio (*RQ*) (50th percentile)	0.00	0.00			0.00	0.00				0.00		0.00
Uniform Delay (d_1), s/veh	19.5	16.3			30.8	6.1				29.4		21.4
Incremental Delay (d_2), s/veh	0.6	0.7			0.9	0.3				0.2		0.6
Initial Queue Delay (d_3), s/veh	0.0	0.0			0.0	0.0				0.0		0.0
Control Delay (*d*), s/veh	20.1	17.1			31.7	6.4				29.6		22.0
Level of Service (LOS)	C	B			C	A				C		C
Approach Delay, s/veh / LOS	18.1	B		24.5	C		0.0			24.6	C	
Intersection Delay, s/veh / LOS	21.7						C					

Multimodal Results	EB		WB		NB		SB	
Pedestrian LOS Score / LOS	0.7	A	2.3	B	2.9	C	2.9	C
Bicycle LOS Score / LOS	1.6	A	1.0	A				F

Copyright © 2014 University of Florida, All Rights Reserved.

MOVEMENT SUMMARY

Site: 2024 AM Full Build

5

Roundabout with thru/left and thru lanes on EB approach, thru/right and thru lanes on WB approach, 1 lane on SB approach, 2 circulating lanes EB & WB, and 1 circulating lane SB & NB

Roundabout

Movement Performance - Vehicles

Mov ID	Turn	Demand Flow veh/h	HV %	Deg. Satn v/c	Average Delay sec	Level of Service	95% Back of Queue Vehicles veh	95% Back of Queue Distance ft	Prop Queued	Effective Stop Rate per veh	Average Speed mph
East: Post Rd											
6T	T	444	0.4	0.302	5.5	LOS A	1.8	46.4	0.59	0.52	29.7
6R	R	176	1.3	0.302	6.4	LOS A	1.8	46.4	0.59	0.61	29.0
Approach		620	0.7	0.302	5.8	LOS A	1.8	46.4	0.59	0.55	29.5
North: Hyland-Croy Rd											
7L	L	344	0.8	1.134	82.5	LOS F	54.7	1385.9	1.00	2.43	12.9
4R	R	680	2.1	1.134	76.8	LOS F	54.7	1385.9	1.00	2.42	13.1
Approach		1024	1.7	1.134	78.7	LOS E	54.7	1385.9	1.00	2.42	13.1
West: Post Rd											
5L	L	418	3.9	0.579	16.3	LOS B	4.8	122.9	0.69	0.82	30.8
2T	T	870	0.8	0.579	7.6	LOS A	4.9	122.9	0.68	0.59	33.6
Approach		1288	1.8	0.579	10.4	LOS B	4.9	122.9	0.68	0.67	32.6
All Vehicles		2932	1.5	1.134	33.3	LOS C	54.7	1385.9	0.77	1.25	21.1

Level of Service (LOS) Method: Delay & v/c (HCM 2010).
Roundabout LOS Method: Same as Signalised Intersections.
Vehicle movement LOS values are based on average delay and v/c ratio (degree of saturation) per movement
LOS F will result if v/c > 1 irrespective of movement delay value (does not apply for approaches and intersection).
Intersection and Approach LOS values are based on average delay for all movements (v/c not used as specified in HCM 2010).
Roundabout Capacity Model: SIDRA Standard.
SIDRA Standard Delay Model used.

Copyright © 2000-2011 Akcelik and Associates Pty Ltd
www.sidrasolutions.com

MOVEMENT SUMMARY

Site: 2024 AM Full Build w/ SBRT

Roundabout with thru/left and thru lanes on EB approach, thru/right and thru lanes on WB approach, left and right turn lanes on SB approach, 2 circulating lanes EB & WB, and 1 circulating lane SB & NB
Roundabout

Movement Performance - Vehicles

Mov ID	Turn	Demand Flow veh/h	HV %	Deg. Satn v/c	Average Delay sec	Level of Service	95% Back of Queue Vehicles veh	95% Back of Queue Distance ft	Prop. Queued	Effective Stop Rate per veh	Average Speed mph
East: Post Rd											
6T	T	444	0.4	0.301	5.5	LOS A	1.8	46.0	0.59	0.52	29.7
6R	R	176	1.3	0.301	6.4	LOS A	1.8	46.0	0.58	0.61	29.0
Approach		620	0.7	0.301	5.8	LOS A	1.8	46.0	0.59	0.55	29.5
North: Hyland-Croy Rd											
7L	L	344	0.8	0.403	14.8	LOS B	1.8	44.1	0.51	0.82	30.0
4R	R	680	2.1	0.648	10.0	LOS B	4.5	114.7	0.63	0.77	33.2
Approach		1024	1.7	0.648	11.6	LOS B	4.5	114.7	0.59	0.79	32.0
West: Post Rd											
5L	L	418	3.9	0.578	16.8	LOS B	4.5	115.9	0.66	0.84	30.6
2T	T	870	0.8	0.578	8.0	LOS A	4.6	115.9	0.65	0.64	33.8
Approach		1288	1.8	0.578	10.9	LOS B	4.6	115.9	0.65	0.70	32.6
All Vehicles		2932	1.5	0.648	10.1	LOS B	4.6	115.9	0.62	0.70	31.8

Level of Service (LOS) Method: Delay & v/c (HCM 2010).
Roundabout LOS Method: Same as Signalised Intersections.
Vehicle movement LOS values are based on average delay and v/c ratio (degree of saturation) per movement
LOS F will result if v/c > 1 irrespective of movement delay value (does not apply for approaches and intersection).
Intersection and Approach LOS values are based on average delay for all movements (v/c not used as specified in HCM 2010).
Roundabout Capacity Model: SIDRA Standard.
SIDRA Standard Delay Model used.

Copyright © 2000-2011 Akcelik and Associates Pty Ltd
www.sidrasolutions.com

5

TWO-WAY STOP CONTROL SUMMARY

General Information		Site Information	
Analyst	JMH	Intersection	Hyland-Croy/Post
Agency/Co.	EMHT	Jurisdiction	Dublin
Date Performed	10/13/2014	Analysis Year	2014 Full Build - SCHOOL
Analysis Time Period	PM Peak		

Project Description	20131358 Riviera TIS
East/West Street: Post Rd	North/South Street: Hyland-Croy Rd
Intersection Orientation: East-West	Study Period (hrs): 0.25

Vehicle Volumes and Adjustments

Major Street	Eastbound			Westbound		
Movement	1	2	3	4	5	6
	L	T	R	L	T	R
Volume (veh/h)	318	382			548	236
Peak-Hour Factor, PHF	0.90	0.90	0.90	0.90	0.90	0.90
Hourly Flow Rate, HFR (veh/h)	353	424	0	0	608	262
Percent Heavy Vehicles	4	--	--	0	--	--
Median Type	Undivided					
RT Channelized			0			0
Lanes	1	2	0	0	2	0
Configuration	L	T			T	TR
Upstream Signal		0			0	

Minor Street	Northbound			Southbound		
Movement	7	8	9	10	11	12
	L	T	R	L	T	R
Volume (veh/h)				89		258
Peak-Hour Factor, PHF	0.90	0.90	0.90	0.90	0.90	0.90
Hourly Flow Rate, HFR (veh/h)	0	0	0	98	0	286
Percent Heavy Vehicles	0	0	0	1	0	2
Percent Grade (%)		0			0	
Flared Approach		N			N	
Storage		0			0	
RT Channelized			0			0
Lanes	0	0	0	0	0	0
Configuration					LR	

Delay, Queue Length, and Level of Service

Approach	Eastbound	Westbound	Northbound			Southbound		
Movement	1	4	7	8	9	10	11	12
Lane Configuration	L						LR	
v (veh/h)	353						384	
C (m) (veh/h)	758						153	
v/c	0.47						2.51	
95% queue length	2.49						33.21	
Control Delay (s/veh)	13.8						745.0	
LOS	B						F	
Approach Delay (s/veh)	--	--	745.0					
Approach LOS	--	--	F					

Copyright © 2007 University of Florida, All Rights Reserved HCS+™ Version 5.3 Generated: 10/15/2014 11:24 AM

HCS 2010 Signalized Intersection Results Summary

5

General Information				Intersection Information	
Agency	EMHT			Duration, h	0.25
Analyst	JMH	Analysis Date	Oct 13, 2014	Area Type	Other
Jurisdiction	Dublin	Time Period	PM Peak - Full Build - SCHOOL	PHF	0.90
Intersection	Hyland-Croy / Post Rd	Analysis Year	2014	Analysis Period	1> 7:00
File Name	2014 PM Full Build.xus				
Project Description	20131358 Riviera TIS				

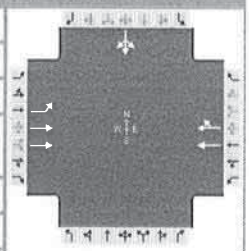

Demand Information	EB			WB			NB			SB		
Approach Movement	L	T	R	L	T	R	L	T	R	L	T	R
Demand (*v*), veh/h	318	382			548	236				89	0	258

Signal Information												
Cycle, s	120.0	Reference Phase	2									
Offset, s	0	Reference Point	End	Green	13.8	60.6	30.7	0.0	0.0	0.0		
Uncoordinated	No	Simult. Gap E/W	On	Yellow	4.0	4.0	4.0	0.0	0.0	0.0		
Force Mode	Fixed	Simult. Gap N/S	On	Red	1.0	1.0	1.0	0.0	0.0	0.0		

Timer Results	EBL	EBT	WBL	WBT	NBL	NBT	SBL	SBT
Assigned Phase	5	2		6				4
Case Number	1.0	4.0		8.3				12.0
Phase Duration, s	18.8	84.3		65.6				35.7
Change Period, ($Y+R_c$), s	5.0	5.0		5.0				5.0
Max Allow Headway (*MAH*), s	3.1	0.0		0.0				3.3
Queue Clearance Time (g_s), s	13.1							29.8
Green Extension Time (g_e), s	0.6	0.0		0.0				0.9
Phase Call Probability	1.00							1.00
Max Out Probability	0.00							0.00

Movement Group Results	EB			WB			NB			SB		
Approach Movement	L	T	R	L	T	R	L	T	R	L	T	R
Assigned Movement	5	2			6	16				7	4	14
Adjusted Flow Rate (*v*), veh/h	353	424			459	412					386	
Adjusted Saturation Flow Rate (*s*), veh/h/ln	1740	1791			1881	1688					1625	
Queue Service Time (g_s), s	11.1	5.5			24.4	19.2					27.8	
Cycle Queue Clearance Time (g_c), s	11.1	5.5			24.4	19.2					27.8	
Green Ratio (*g/C*)	0.64	0.66			0.50	0.50					0.26	
Capacity (*c*), veh/h	447	2368			950	852					415	
Volume-to-Capacity Ratio (*X*)	0.790	0.179			0.483	0.484					0.929	
Available Capacity (c_a), veh/h	716	2368			950	852					772	
Back of Queue (*Q*), veh/ln (50th percentile)	4.1	2.0			8.6	7.8					11.4	
Queue Storage Ratio (*RQ*) (50th percentile)	0.00	0.00			0.00	0.00					0.00	
Uniform Delay (d_1), s/veh	16.7	7.8			19.5	19.5					43.6	
Incremental Delay (d_2), s/veh	1.2	0.2			1.8	2.0					4.0	
Initial Queue Delay (d_3), s/veh	0.0	0.0			0.0	0.0					0.0	
Control Delay (*d*), s/veh	17.9	8.0			21.2	21.4					47.6	
Level of Service (LOS)	B	A			C	C					D	
Approach Delay, s/veh / LOS	12.5	B		21.3	C		0.0			47.6	D	
Intersection Delay, s/veh / LOS	22.9						C					

Multimodal Results	EB		WB		NB		SB	
Pedestrian LOS Score / LOS	1.9	A	2.1	B	2.8	C	2.9	C
Bicycle LOS Score / LOS	1.1	A	1.2	A			1.1	A

Copyright © 2014 University of Florida, All Rights Reserved.

5

TWO-WAY STOP CONTROL SUMMARY

General Information		Site Information	
Analyst	JMH	Intersection	Hyland-Croy/Post
Agency/Co.	EMHT	Jurisdiction	Dublin
Date Performed	10/13/2014	Analysis Year	2024 Full Build - SCHOOL
Analysis Time Period	PM Peak		

Project Description 20131358 Riviera TIS

East/West Street: Post Rd	North/South Street: Hyland-Croy Rd
Intersection Orientation: East-West	Study Period (hrs): 0.25

Vehicle Volumes and Adjustments

Major Street	Eastbound			Westbound		
Movement	1	2	3	4	5	6
	L	T	R	L	T	R
Volume (veh/h)	689	539			774	410
Peak-Hour Factor, PHF	0.90	0.90	0.90	0.90	0.90	0.90
Hourly Flow Rate, HFR (veh/h)	765	598	0	0	860	455
Percent Heavy Vehicles	4	--	--	0	--	--
Median Type	Undivided					
RT Channelized			0			0
Lanes	1	2	0	0	2	0
Configuration	L	T			T	TR
Upstream Signal		0			0	

Minor Street	Northbound			Southbound		
Movement	7	8	9	10	11	12
	L	T	R	L	T	R
Volume (veh/h)				196		525
Peak-Hour Factor, PHF	0.90	0.90	0.90	0.90	0.90	0.90
Hourly Flow Rate, HFR (veh/h)	0	0	0	217	0	583
Percent Heavy Vehicles	0	0	0	1	0	2
Percent Grade (%)		0			0	
Flared Approach		N			N	
Storage		0			0	
RT Channelized			0			0
Lanes	0	0	0	0	0	0
Configuration					LR	

Delay, Queue Length, and Level of Service

Approach	Eastbound	Westbound	Northbound			Southbound		
Movement	1	4	7	8	9	10	11	12
Lane Configuration	L						LR	
v (veh/h)	765						800	
C (m) (veh/h)	511						0	
v/c	1.50							
95% queue length	39.09							
Control Delay (s/veh)	255.2							
LOS	F						F	
Approach Delay (s/veh)	--	--						
Approach LOS	--	--						

Copyright © 2007 University of Florida, All Rights Reserved

HCS+™ Version 5.3

Generated: 10/16/2014 8:27 AM

HCS 2010 Signalized Intersection Results Summary

General Information				Intersection Information	
Agency	EMHT			Duration, h	0.25
Analyst	JMH	Analysis Date	Oct 13, 2014	Area Type	Other
Jurisdiction	Dublin	Time Period	PM Peak - Full Build -SCHOOL	PHF	0.90
Intersection	Hyland-Croy / Post Rd	Analysis Year	2024	Analysis Period	1> 7:00
File Name	2024 PM Full Build.xus				
Project Description	20131358 Riviera TIS				

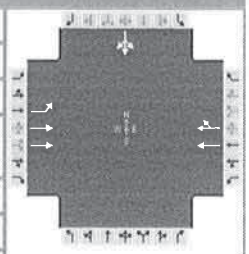

Demand Information	EB			WB			NB			SB		
Approach Movement	L	T	R	L	T	R	L	T	R	L	T	R
Demand (*v*), veh/h	689	539			774	410				196	0	525

Signal Information			
Cycle, s	120.0	Reference Phase	2
Offset, s	0	Reference Point	End
Uncoordinated	No	Simult. Gap E/W	On
Force Mode	Fixed	Simult. Gap N/S	On

Green	17.1	27.0	60.9	0.0	0.0	0.0
Yellow	4.0	4.0	4.0	0.0	0.0	0.0
Red	1.0	1.0	1.0	0.0	0.0	0.0

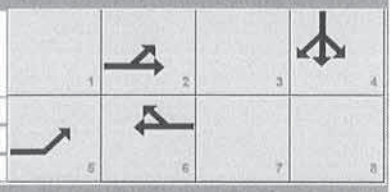

Timer Results	EBL	EBT	WBL	WBT	NBL	NBT	SBL	SBT
Assigned Phase	5	2		6				4
Case Number	1.0	4.0		8.3				12.0
Phase Duration, s	22.1	54.1		32.0				65.9
Change Period, ($Y+R_c$), s	5.0	5.0		5.0				5.0
Max Allow Headway (*MAH*), s	3.1	0.0		0.0				3.3
Queue Clearance Time (g_s), s	19.1							59.3
Green Extension Time (g_e), s	0.0	0.0		0.0				1.6
Phase Call Probability	1.00							1.00
Max Out Probability	1.00							0.22

Movement Group Results	EB			WB			NB			SB		
Approach Movement	L	T	R	L	T	R	L	T	R	L	T	R
Assigned Movement	5	2			6	16				7	4	14
Adjusted Flow Rate (*v*), veh/h	766	599			694	622					801	
Adjusted Saturation Flow Rate (*s*), veh/h/ln	1740	1791			1881	1662					1627	
Queue Service Time (g_s), s	17.1	14.2			52.1	27.0					57.3	
Cycle Queue Clearance Time (g_c), s	17.1	14.2			52.1	27.0					57.3	
Green Ratio (*g/C*)	0.38	0.41			0.23	0.23					0.51	
Capacity (*c*), veh/h	308	1466			423	374					826	
Volume-to-Capacity Ratio (*X*)	2.484	0.408			1.639	1.663					0.970	
Available Capacity (c_a), veh/h	308	1466			423	374					909	
Back of Queue (*Q*), veh/ln (50th percentile)	65.1	6.1			47.4	43.2					25.9	
Queue Storage Ratio (*RQ*) (50th percentile)	0.00	0.00			0.00	0.00					0.00	
Uniform Delay (d_1), s/veh	35.4	25.1			46.5	46.5					28.7	
Incremental Delay (d_2), s/veh	677.4	0.8			298.0	309.9					21.4	
Initial Queue Delay (d_3), s/veh	0.0	0.0			0.0	0.0					0.0	
Control Delay (*d*), s/veh	712.8	26.0			344.5	356.4					50.1	
Level of Service (LOS)	F	C			F	F					D	
Approach Delay, s/veh / LOS	411.4	F		350.1	F		0.0			50.1	D	
Intersection Delay, s/veh / LOS	305.1						F					

Multimodal Results	EB		WB		NB		SB	
Pedestrian LOS Score / LOS	1.9	A	2.1	B	2.8	C	2.9	C
Bicycle LOS Score / LOS	1.6	A	1.6	A			1.8	A

Copyright © 2014 University of Florida, All Rights Reserved.

HCS 2010 Signalized Intersection Results Summary

General Information				Intersection Information	
Agency	EMHT			Duration, h	0.25
Analyst	JMH	Analysis Date	Oct 13, 2014	Area Type	Other
Jurisdiction	Dublin	Time Period	PM Peak - Full Build - SCHOOL	PHF	0.90
Intersection	Hyland-Croy / Post Rd	Analysis Year	2024	Analysis Period	1> 7:00
File Name	2024 PM Full Build.xus				
Project Description	20131358 Riviera TIS				

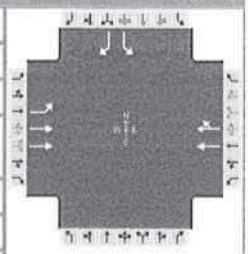

Demand Information	EB			WB			NB			SB		
Approach Movement	L	T	R	L	T	R	L	T	R	L	T	R
Demand (*v*), veh/h	689	539			774	410				196		525

Signal Information			
Cycle, s	120.0	Reference Phase	2
Offset, s	0	Reference Point	End
Uncoordinated	No	Simult. Gap E/W	On
Force Mode	Fixed	Simult. Gap N/S	On

Green	45.0	44.0	16.0	0.0	0.0	0.0
Yellow	4.0	4.0	4.0	0.0	0.0	0.0
Red	1.0	1.0	1.0	0.0	0.0	0.0

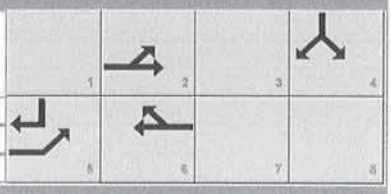

Timer Results	EBL	EBT	WBL	WBT	NBL	NBT	SBL	SBT
Assigned Phase	5	2		6				4
Case Number	1.0	4.0		8.3				9.0
Phase Duration, s	50.0	99.0		49.0				21.0
Change Period, ($Y+R_c$), s	5.0	5.0		5.0				5.0
Max Allow Headway (*MAH*), s	3.1	0.0		0.0				3.3
Queue Clearance Time (g_s), s	47.0							18.0
Green Extension Time (g_e), s	0.0	0.0		0.0				0.0
Phase Call Probability	1.00							1.00
Max Out Probability	1.00							1.00

Movement Group Results	EB			WB			NB			SB		
Approach Movement	L	T	R	L	T	R	L	T	R	L	T	R
Assigned Movement	5	2			6	16				7		14
Adjusted Flow Rate (*v*), veh/h	766	599			694	622				218		583
Adjusted Saturation Flow Rate (*s*), veh/h/ln	1740	1791			1881	1662				1810		1610
Queue Service Time (g_s), s	45.0	5.2			42.6	44.0				14.2		16.0
Cycle Queue Clearance Time (g_c), s	45.0	5.2			42.6	44.0				14.2		16.0
Green Ratio (*g/C*)	0.76	0.78			0.37	0.37				0.13		0.51
Capacity (*c*), veh/h	712	2806			690	609				241		818
Volume-to-Capacity Ratio (*X*)	1.074	0.213			1.006	1.020				0.903		0.713
Available Capacity (c_a), veh/h	712	2806			690	609				241		818
Back of Queue (*Q*), veh/ln (50th percentile)	31.0	1.5			26.4	24.4				8.6		12.7
Queue Storage Ratio (*RQ*) (50th percentile)	0.00	0.00			0.00	0.00				0.00		0.00
Uniform Delay (d_1), s/veh	33.2	3.4			38.0	38.0				51.2		22.7
Incremental Delay (d_2), s/veh	55.5	0.2			35.7	41.7				32.6		2.5
Initial Queue Delay (d_3), s/veh	0.0	0.0			0.0	0.0				0.0		0.0
Control Delay (*d*), s/veh	88.7	3.6			73.7	79.7				83.8		25.3
Level of Service (LOS)	F	A			F	F				F		C
Approach Delay, s/veh / LOS	51.3	D		76.5	E		0.0			41.2	D	
Intersection Delay, s/veh / LOS	58.5						E					

Multimodal Results	EB		WB		NB		SB	
Pedestrian LOS Score / LOS	0.6	A	2.3	B	2.8	C	2.9	C
Bicycle LOS Score / LOS	1.6	A	1.6	A				F

Copyright © 2014 University of Florida, All Rights Reserved.

HCS 2010 Signalized Intersection Results Summary

5

General Information				Intersection Information	
Agency	EMHT			Duration, h	0.25
Analyst	JMH	Analysis Date	Oct 13, 2014	Area Type	Other
Jurisdiction	Dublin	Time Period	PM Peak - Full Build - SCHOOL	PHF	0.90
Intersection	Hyland-Croy / Post Rd	Analysis Year	2024	Analysis Period	1> 7:00
File Name	2024 PM Full Build.xus				
Project Description	20131358 Riviera TIS				

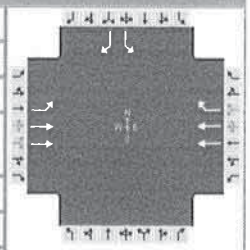

Demand Information	EB			WB			NB			SB		
Approach Movement	L	T	R	L	T	R	L	T	R	L	T	R
Demand (*v*), veh/h	689	539			774	410				196		525

Signal Information			
Cycle, s	120.0	Reference Phase	2
Offset, s	0	Reference Point	End
Uncoordinated	No	Simult. Gap E/W	On
Force Mode	Fixed	Simult. Gap N/S	On

Green	43.9	41.1	20.0	0.0	0.0	0.0
Yellow	4.0	4.0	4.0	0.0	0.0	0.0
Red	1.0	1.0	1.0	0.0	0.0	0.0

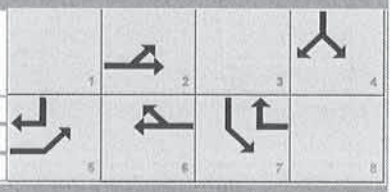

Timer Results	EBL	EBT	WBL	WBT	NBL	NBT	SBL	SBT
Assigned Phase	5	2		6				4
Case Number	1.0	4.0		7.3				9.0
Phase Duration, s	48.9	95.0		46.1				25.0
Change Period, ($Y+R_c$), s	5.0	5.0		5.0				5.0
Max Allow Headway (*MAH*), s	3.1	0.0		0.0				3.3
Queue Clearance Time (g_s), s	43.9							22.0
Green Extension Time (g_e), s	0.0	0.0		0.0				0.0
Phase Call Probability	1.00							1.00
Max Out Probability	1.00							1.00

Movement Group Results	EB			WB			NB			SB		
Approach Movement	L	T	R	L	T	R	L	T	R	L	T	R
Assigned Movement	5	2			6	16				7		14
Adjusted Flow Rate (*v*), veh/h	766	599			860	456				218		583
Adjusted Saturation Flow Rate (*s*), veh/h/ln	1740	1791			1791	1610				1810		1610
Queue Service Time (g_s), s	41.9	6.0			24.9	23.2				13.7		20.0
Cycle Queue Clearance Time (g_c), s	41.9	6.0			24.9	23.2				13.7		20.0
Green Ratio (*g/C*)	0.73	0.75			0.34	0.51				0.17		0.53
Capacity (*c*), veh/h	781	2686			1228	820				302		857
Volume-to-Capacity Ratio (*X*)	0.980	0.223			0.700	0.555				0.722		0.681
Available Capacity (c_a), veh/h	783	2686			1228	820				302		857
Back of Queue (*Q*), veh/ln (50th percentile)	26.7	1.9			11.2	9.0				6.7		11.8
Queue Storage Ratio (*RQ*) (50th percentile)	0.00	0.00			0.00	0.00				0.00		0.00
Uniform Delay (d_1), s/veh	26.3	4.5			34.1	20.1				47.4		20.6
Incremental Delay (d_2), s/veh	26.9	0.2			3.3	2.7				7.2		1.8
Initial Queue Delay (d_3), s/veh	0.0	0.0			0.0	0.0				0.0		0.0
Control Delay (*d*), s/veh	53.2	4.7			37.4	22.8				54.5		22.4
Level of Service (LOS)	D	A			D	C				D		C
Approach Delay, s/veh / LOS	31.9	C		32.4	C		0.0			31.2	C	
Intersection Delay, s/veh / LOS	31.9						C					

Multimodal Results	EB		WB		NB		SB	
Pedestrian LOS Score / LOS	0.7	A	2.3	B	2.9	C	2.9	C
Bicycle LOS Score / LOS	1.6	A	1.6	A				F

Copyright © 2014 University of Florida, All Rights Reserved.

MOVEMENT SUMMARY

Site: 2024 PM Full Build

Roundabout with thru/left and thru lanes on EB approach, thru/right and thru lanes on WB approach, 1 lane on SB approach, 2 circulating lanes EB & WB, and 1 circulating lane SB & NB

Roundabout

Movement Performance - Vehicles

Mov ID	Turn	Demand Flow veh/h	HV %	Deg. Satn v/c	Average Delay sec	Level of Service	95% Back of Queue Vehicles veh	95% Back of Queue Distance ft	Prop. Queued	Effective Stop Rate per veh	Average Speed mph
East: Post Rd											
6T	T	860	0.4	0.887	25.3	LOS C	17.0	428.5	1.00	1.46	21.5
6R	R	456	1.3	0.887	25.2	LOS C	17.0	428.5	1.00	1.47	21.1
Approach		1316	0.7	0.887	25.3	LOS C	17.0	428.5	1.00	1.46	21.3
North: Hyland-Croy Rd											
7L	L	218	0.8	1.305	159.3	LOS F	70.1	1776.1	1.00	3.28	7.8
4R	R	583	2.1	1.305	153.5	LOS F	70.1	1776.1	1.00	3.27	7.7
Approach		801	1.7	1.305	155.1	LOS F	70.1	1776.1	1.00	3.27	7.7
West: Post Rd											
5L	L	766	3.9	0.579	15.0	LOS B	5.0	129.9	0.53	0.68	30.4
2T	T	599	0.8	0.500	6.8	LOS A	3.8	95.8	0.49	0.52	34.9
Approach		1364	2.5	0.579	11.4	LOS B	5.0	129.9	0.52	0.61	32.1
All Vehicles		3481	1.7	1.305	49.7	LOS D	70.1	1776.1	0.81	1.55	16.8

Level of Service (LOS) Method: Delay & v/c (HCM 2010).
Roundabout LOS Method: Same as Signalised Intersections.
Vehicle movement LOS values are based on average delay and v/c ratio (degree of saturation) per movement
LOS F will result if v/c > 1 irrespective of movement delay value (does not apply for approaches and intersection).
Intersection and Approach LOS values are based on average delay for all movements (v/c not used as specified in HCM 2010).
Roundabout Capacity Model: SIDRA Standard.
SIDRA Standard Delay Model used.

Copyright © 2000-2011 Akcelik and Associates Pty Ltd
www.sidrasolutions.com

MOVEMENT SUMMARY

Site: 2024 PM Full Build w/ SBRT

Roundabout with thru/left and thru lanes on EB approach, thru/right and thru lanes on WB approach, left and right turn lanes on SB approach, 2 circulating lanes EB & WB, and 1 circulating lane SB & NB

Roundabout

Movement Performance - Vehicles

Mov ID	Turn	Demand Flow veh/h	HV %	Deg. Satn v/c	Average Delay sec	Level of Service	95% Back of Queue Vehicles veh	95% Back of Queue Distance ft	Prop. Queued	Effective Stop Rate per veh	Average Speed mph
East: Post Rd											
6T	T	860	0.4	0.900	26.8	LOS C	17.9	451.3	1.00	1.49	21.0
6R	R	456	1.3	0.900	26.6	LOS C	17.9	451.3	1.00	1.50	20.7
Approach		1316	0.7	0.900	26.7	LOS C	17.9	451.3	1.00	1.49	20.9
North: Hyland-Croy Rd											
7L	L	218	0.8	0.396	16.8	LOS B	1.9	47.2	0.70	0.93	29.3
4R	R	583	2.1	0.763	13.4	LOS B	6.5	164.9	0.88	1.05	31.7
Approach		801	1.7	0.763	14.3	LOS B	6.5	164.9	0.83	1.02	31.0
West: Post Rd											
5L	L	766	3.9	0.601	15.4	LOS B	4.9	127.1	0.58	0.71	30.2
2T	T	599	0.8	0.519	7.1	LOS A	3.7	93.9	0.53	0.55	34.7
Approach		1364	2.5	0.601	11.7	LOS B	4.9	127.1	0.56	0.64	31.9
All Vehicles		3481	1.7	0.900	18.0	LOS B	17.9	451.3	0.79	1.05	26.7

Level of Service (LOS) Method: Delay & v/c (HCM 2010).
Roundabout LOS Method: Same as Signalised Intersections.
Vehicle movement LOS values are based on average delay and v/c ratio (degree of saturation) per movement
LOS F will result if v/c > 1 irrespective of movement delay value (does not apply for approaches and intersection).
Intersection and Approach LOS values are based on average delay for all movements (v/c not used as specified in HCM 2010).
Roundabout Capacity Model: SIDRA Standard.
SIDRA Standard Delay Model used.

Copyright © 2000-2011 Akcelik and Associates Pty Ltd
www.sidrasolutions.com

BRAND ROAD / ABBIE GLEN BOULEVARD

6

TWO-WAY STOP CONTROL SUMMARY

General Information		Site Information	
Analyst	JMH	Intersection	Brand/Abbie Glen
Agency/Co.	EMHT	Jurisdiction	Dublin
Date Performed	10/13/2014	Analysis Year	2014 Full Build - SCHOOL
Analysis Time Period	AM Peak Hour		

Project Description 20131358 Riviera TIS

East/West Street: Brand Rd | North/South Street: Abbie Glen

Intersection Orientation: East-West | Study Period (hrs): 0.25

Vehicle Volumes and Adjustments

Major Street	Eastbound			Westbound		
Movement	1	2	3	4	5	6
	L	T	R	L	T	R
Volume (veh/h)	33	226			415	11
Peak-Hour Factor, PHF	0.90	0.90	1.00	1.00	0.90	1.00
Hourly Flow Rate, HFR (veh/h)	36	251	0	0	461	11
Percent Heavy Vehicles	0	--	--	0	--	--
Median Type	Undivided					
RT Channelized			0			0
Lanes	1	1	0	0	1	0
Configuration	L	T				TR
Upstream Signal		0			0	

Minor Street	Northbound			Southbound		
Movement	7	8	9	10	11	12
	L	T	R	L	T	R
Volume (veh/h)				24		122
Peak-Hour Factor, PHF	1.00	1.00	1.00	0.90	1.00	0.90
Hourly Flow Rate, HFR (veh/h)	0	0	0	26	0	135
Percent Heavy Vehicles	0	0	0	0	0	0
Percent Grade (%)		0			0	
Flared Approach		N			N	
Storage		0			0	
RT Channelized			0			0
Lanes	0	0	0	0	0	0
Configuration					LR	

Delay, Queue Length, and Level of Service

Approach	Eastbound	Westbound	Northbound			Southbound		
Movement	1	4	7	8	9	10	11	12
Lane Configuration	L						LR	
v (veh/h)	36						161	
C (m) (veh/h)	1100						539	
v/c	0.03						0.30	
95% queue length	0.10						1.24	
Control Delay (s/veh)	8.4						14.5	
LOS	A						B	
Approach Delay (s/veh)	--	--				14.5		
Approach LOS	--	--				B		

Copyright © 2007 University of Florida, All Rights Reserved

HCS+™ Version 5.3 Generated: 10/15/2014 12:52 PM

6

TWO-WAY STOP CONTROL SUMMARY

General Information

Analyst	JMH
Agency/Co.	EMHT
Date Performed	10/13/2014
Analysis Time Period	AM Peak Hour

Site Information

Intersection	Brand/Abbie Glen
Jurisdiction	Dublin
Analysis Year	2014 FB w/o HCSD - SCHOOL

Project Description 20131358 Riviera TIS

East/West Street: Brand Rd | North/South Street: Abbie Glen

Intersection Orientation: East-West | Study Period (hrs): 0.25

Vehicle Volumes and Adjustments

Major Street	Eastbound			Westbound		
Movement	1	2	3	4	5	6
	L	T	R	L	T	R
Volume (veh/h)	42	219			415	23
Peak-Hour Factor, PHF	0.90	0.90	1.00	1.00	0.90	1.00
Hourly Flow Rate, HFR (veh/h)	46	243	0	0	461	23
Percent Heavy Vehicles	0	--	--	0	--	--
Median Type	Undivided					
RT Channelized			0			0
Lanes	1	1	0	0	1	0
Configuration	L	T				TR
Upstream Signal		0			0	

Minor Street	Northbound			Southbound		
Movement	7	8	9	10	11	12
	L	T	R	L	T	R
Volume (veh/h)				35		128
Peak-Hour Factor, PHF	1.00	1.00	1.00	0.90	1.00	0.90
Hourly Flow Rate, HFR (veh/h)	0	0	0	38	0	142
Percent Heavy Vehicles	0	0	0	0	0	0
Percent Grade (%)		0			0	
Flared Approach		N			N	
Storage		0			0	
RT Channelized			0			0
Lanes	0	0	0	0	0	0
Configuration					LR	

Delay, Queue Length, and Level of Service

Approach	Eastbound	Westbound	Northbound			Southbound		
Movement	1	4	7	8	9	10	11	12
Lane Configuration	L						LR	
v (veh/h)	46						180	
C (m) (veh/h)	1089						514	
v/c	0.04						0.35	
95% queue length	0.13						1.56	
Control Delay (s/veh)	8.5						15.7	
LOS	A						C	
Approach Delay (s/veh)	--	--				15.7		
Approach LOS	--	--				C		

Copyright © 2007 University of Florida, All Rights Reserved HCS+™ Version 5.3 Generated: 10/15/2014 3:12 PM

6

TWO-WAY STOP CONTROL SUMMARY

General Information		Site Information	
Analyst	JMH	Intersection	Brand/Abbie Glen
Agency/Co.	EMHT	Jurisdiction	Dublin
Date Performed	10/13/2014	Analysis Year	2024 Full Build - SCHOOL
Analysis Time Period	AM Peak Hour		

Project Description 20131358 Riviera TIS

East/West Street: Brand Rd | North/South Street: Abbie Glen

Intersection Orientation: East-West | Study Period (hrs): 0.25

Vehicle Volumes and Adjustments

Major Street	Eastbound			Westbound		
Movement	1	2	3	4	5	6
	L	T	R	L	T	R
Volume (veh/h)	33	356			589	27
Peak-Hour Factor, PHF	0.90	0.90	1.00	1.00	0.90	1.00
Hourly Flow Rate, HFR (veh/h)	36	395	0	0	654	27
Percent Heavy Vehicles	0	--	--	0	--	--
Median Type	Undivided					
RT Channelized			0			0
Lanes	1	1	0	0	1	0
Configuration	L	T				TR
Upstream Signal		0			0	

Minor Street	Northbound			Southbound		
Movement	7	8	9	10	11	12
	L	T	R	L	T	R
Volume (veh/h)				24		122
Peak-Hour Factor, PHF	1.00	1.00	1.00	0.90	1.00	0.90
Hourly Flow Rate, HFR (veh/h)	0	0	0	26	0	135
Percent Heavy Vehicles	0	0	0	0	0	0
Percent Grade (%)		0			0	
Flared Approach		N			N	
Storage		0			0	
RT Channelized			0			0
Lanes	0	0	0	0	0	0
Configuration					LR	

Delay, Queue Length, and Level of Service

Approach	Eastbound	Westbound	Northbound			Southbound		
Movement	1	4	7	8	9	10	11	12
Lane Configuration	L						LR	
v (veh/h)	36						161	
C (m) (veh/h)	921						391	
v/c	0.04						0.41	
95% queue length	0.12						1.97	
Control Delay (s/veh)	9.1						20.5	
LOS	A						C	
Approach Delay (s/veh)	--	--				20.5		
Approach LOS	--	--				C		

Copyright © 2007 University of Florida, All Rights Reserved

HCS+™ Version 5.3 Generated: 10/15/2014 1:03 PM

6

TWO-WAY STOP CONTROL SUMMARY

General Information

Analyst	JMH
Agency/Co.	EMHT
Date Performed	10/13/2014
Analysis Time Period	AM Peak Hour

Site Information

Intersection	Brand/Abbie Glen
Jurisdiction	Dublin
Analysis Year	2024 FB w/o HCSD - SCHOOL

Project Description 20131358 Riviera TIS

East/West Street: Brand Rd | North/South Street: Abbie Glen

Intersection Orientation: East-West | Study Period (hrs): 0.25

Vehicle Volumes and Adjustments

Major Street	Eastbound			Westbound		
Movement	1	2	3	4	5	6
	L	T	R	L	T	R
Volume (veh/h)	42	349			589	39
Peak-Hour Factor, PHF	0.90	0.90	1.00	1.00	0.90	1.00
Hourly Flow Rate, HFR (veh/h)	46	387	0	0	654	39
Percent Heavy Vehicles	0	--	--	0	--	--
Median Type	Undivided					
RT Channelized			0			0
Lanes	1	1	0	0	1	0
Configuration	L	T				TR
Upstream Signal		0			0	

Minor Street	Northbound			Southbound		
Movement	7	8	9	10	11	12
	L	T	R	L	T	R
Volume (veh/h)				35		128
Peak-Hour Factor, PHF	1.00	1.00	1.00	0.90	1.00	0.90
Hourly Flow Rate, HFR (veh/h)	0	0	0	38	0	142
Percent Heavy Vehicles	0	0	0	0	0	0
Percent Grade (%)		0			0	
Flared Approach		N			N	
Storage		0			0	
RT Channelized			0			0
Lanes	0	0	0	0	0	0
Configuration					LR	

Delay, Queue Length, and Level of Service

Approach	Eastbound	Westbound	Northbound			Southbound		
Movement	1	4	7	8	9	10	11	12
Lane Configuration	L						LR	
v (veh/h)	46						180	
C (m) (veh/h)	912						366	
v/c	0.05						0.49	
95% queue length	0.16						2.61	
Control Delay (s/veh)	9.2						24.0	
LOS	A						C	
Approach Delay (s/veh)	--	--	24.0					
Approach LOS	--	--	C					

Copyright © 2007 University of Florida, All Rights Reserved HCS+™ Version 5.3 Generated: 10/15/2014 3:17 PM

6

TWO-WAY STOP CONTROL SUMMARY

General Information		Site Information	
Analyst	JMH	Intersection	Brand/Abbie Glen
Agency/Co.	EMHT	Jurisdiction	Dublin
Date Performed	10/13/2014	Analysis Year	2014 Full Build - SCHOOL
Analysis Time Period	PM Peak Hour		

Project Description 20131358 Riviera TIS

East/West Street: Brand Rd | North/South Street: Abbie Glen

Intersection Orientation: East-West | Study Period (hrs): 0.25

Vehicle Volumes and Adjustments

Major Street	Eastbound			Westbound		
Movement	1	2	3	4	5	6
	L	T	R	L	T	R
Volume (veh/h)	40	301			255	38
Peak-Hour Factor, PHF	0.90	0.90	1.00	1.00	0.90	1.00
Hourly Flow Rate, HFR (veh/h)	44	334	0	0	283	38
Percent Heavy Vehicles	0	--	--	0	--	--
Median Type	Undivided					
RT Channelized			0			0
Lanes	1	1	0	0	1	0
Configuration	L	T				TR
Upstream Signal		0			0	

Minor Street	Northbound			Southbound		
Movement	7	8	9	10	11	12
	L	T	R	L	T	R
Volume (veh/h)				21		19
Peak-Hour Factor, PHF	1.00	1.00	1.00	0.90	1.00	0.90
Hourly Flow Rate, HFR (veh/h)	0	0	0	23	0	21
Percent Heavy Vehicles	0	0	0	0	0	0
Percent Grade (%)		0			0	
Flared Approach		N			N	
Storage		0			0	
RT Channelized			0			0
Lanes	0	0	0	0	0	0
Configuration					LR	

Delay, Queue Length, and Level of Service

Approach	Eastbound	Westbound	Northbound			Southbound		
Movement	1	4	7	8	9	10	11	12
Lane Configuration	L						LR	
v (veh/h)	44						44	
C (m) (veh/h)	1250						497	
v/c	0.04						0.09	
95% queue length	0.11						0.29	
Control Delay (s/veh)	8.0						12.9	
LOS	A						B	
Approach Delay (s/veh)	--	--				12.9		
Approach LOS	--	--				B		

Copyright © 2007 University of Florida, All Rights Reserved

HCS+™ Version 5.3 Generated: 10/15/2014 12:54 PM

6

TWO-WAY STOP CONTROL SUMMARY

General Information

Analyst	JMH
Agency/Co.	EMHT
Date Performed	10/13/2014
Analysis Time Period	PM Peak Hour

Site Information

Intersection	Brand/Abbie Glen
Jurisdiction	Dublin
Analysis Year	2014 FB w/o HCSD - SCHOOL

Project Description 20131358 Riviera TIS

East/West Street: Brand Rd | North/South Street: Abbie Glen

Intersection Orientation: East-West | Study Period (hrs): 0.25

Vehicle Volumes and Adjustments

Major Street	Eastbound			Westbound		
Movement	1	2	3	4	5	6
	L	T	R	L	T	R
Volume (veh/h)	43	314			249	42
Peak-Hour Factor, PHF	0.90	0.90	1.00	1.00	0.90	1.00
Hourly Flow Rate, HFR (veh/h)	47	348	0	0	276	42
Percent Heavy Vehicles	0	--	--	0	--	--
Median Type	Undivided					
RT Channelized			0			0
Lanes	1	1	0	0	1	0
Configuration	L	T				TR
Upstream Signal		0			0	

Minor Street	Northbound			Southbound		
Movement	7	8	9	10	11	12
	L	T	R	L	T	R
Volume (veh/h)				27		28
Peak-Hour Factor, PHF	1.00	1.00	1.00	0.90	1.00	0.90
Hourly Flow Rate, HFR (veh/h)	0	0	0	30	0	31
Percent Heavy Vehicles	0	0	0	0	0	0
Percent Grade (%)	0			0		
Flared Approach		N			N	
Storage		0			0	
RT Channelized			0			0
Lanes	0	0	0	0	0	0
Configuration					LR	

Delay, Queue Length, and Level of Service

Approach	Eastbound	Westbound	Northbound			Southbound		
Movement	1	4	7	8	9	10	11	12
Lane Configuration	L						LR	
v (veh/h)	47						61	
C (m) (veh/h)	1253						500	
v/c	0.04						0.12	
95% queue length	0.12						0.41	
Control Delay (s/veh)	8.0						13.2	
LOS	A						B	
Approach Delay (s/veh)	--	--	13.2					
Approach LOS	--	--	B					

Copyright © 2007 University of Florida, All Rights Reserved

HCS+™ Version 5.3

Generated: 10/15/2014 3:13 PM

6

TWO-WAY STOP CONTROL SUMMARY

General Information		Site Information	
Analyst	JMH	Intersection	Brand/Abbie Glen
Agency/Co.	EMHT	Jurisdiction	Dublin
Date Performed	10/13/2014	Analysis Year	2024 Full Build - SCHOOL
Analysis Time Period	PM Peak Hour		

Project Description 20131358 Riviera TIS

East/West Street: Brand Rd | North/South Street: Abbie Glen

Intersection Orientation: East-West | Study Period (hrs): 0.25

Vehicle Volumes and Adjustments

Major Street	Eastbound			Westbound		
Movement	1	2	3	4	5	6
	L	T	R	L	T	R
Volume (veh/h)	40	457			372	67
Peak-Hour Factor, PHF	0.90	0.90	1.00	1.00	0.90	1.00
Hourly Flow Rate, HFR (veh/h)	44	507	0	0	413	67
Percent Heavy Vehicles	0	--	--	0	--	--
Median Type	Undivided					
RT Channelized			0			0
Lanes	1	1	0	0	1	0
Configuration	L	T				TR
Upstream Signal		0			0	

Minor Street	Northbound			Southbound		
Movement	7	8	9	10	11	12
	L	T	R	L	T	R
Volume (veh/h)				21		19
Peak-Hour Factor, PHF	1.00	1.00	1.00	0.90	1.00	0.90
Hourly Flow Rate, HFR (veh/h)	0	0	0	23	0	21
Percent Heavy Vehicles	0	0	0	0	0	0
Percent Grade (%)	0			0		
Flared Approach		N			N	
Storage		0			0	
RT Channelized			0			0
Lanes	0	0	0	0	0	0
Configuration					LR	

Delay, Queue Length, and Level of Service

Approach	Eastbound	Westbound	Northbound			Southbound		
Movement	1	4	7	8	9	10	11	12
Lane Configuration	L						LR	
v (veh/h)	44						44	
C (m) (veh/h)	1093						346	
v/c	0.04						0.13	
95% queue length	0.13						0.43	
Control Delay (s/veh)	8.4						16.9	
LOS	A						C	
Approach Delay (s/veh)	--	--	16.9					
Approach LOS	--	--	C					

Copyright © 2007 University of Florida, All Rights Reserved HCS+™ Version 5.3 Generated: 10/15/2014 1:04 PM

6

TWO-WAY STOP CONTROL SUMMARY

General Information

Analyst	JMH
Agency/Co.	EMHT
Date Performed	10/13/2014
Analysis Time Period	PM Peak Hour

Site Information

Intersection	Brand/Abbie Glen
Jurisdiction	Dublin
Analysis Year	2024 FB w/o HCSD - SCHOOL

Project Description 20131358 Riviera TIS

East/West Street: Brand Rd | North/South Street: Abbie Glen

Intersection Orientation: East-West | Study Period (hrs): 0.25

Vehicle Volumes and Adjustments

Major Street	Eastbound			Westbound		
Movement	1	2	3	4	5	6
	L	T	R	L	T	R
Volume (veh/h)	43	470			366	71
Peak-Hour Factor, PHF	0.90	0.90	1.00	1.00	0.90	1.00
Hourly Flow Rate, HFR (veh/h)	47	522	0	0	406	71
Percent Heavy Vehicles	0	--	--	0	--	--
Median Type	Undivided					
RT Channelized			0			0
Lanes	1	1	0	0	1	0
Configuration	L	T				TR
Upstream Signal		0			0	

Minor Street	Northbound			Southbound		
Movement	7	8	9	10	11	12
	L	T	R	L	T	R
Volume (veh/h)				27		28
Peak-Hour Factor, PHF	1.00	1.00	1.00	0.90	1.00	0.90
Hourly Flow Rate, HFR (veh/h)	0	0	0	30	0	31
Percent Heavy Vehicles	0	0	0	0	0	0
Percent Grade (%)		0			0	
Flared Approach		N			N	
Storage		0			0	
RT Channelized			0			0
Lanes	0	0	0	0	0	0
Configuration					LR	

Delay, Queue Length, and Level of Service

Approach	Eastbound	Westbound	Northbound			Southbound		
Movement	1	4	7	8	9	10	11	12
Lane Configuration	L						LR	
v (veh/h)	47						61	
C (m) (veh/h)	1096						349	
v/c	0.04						0.17	
95% queue length	0.13						0.62	
Control Delay (s/veh)	8.4						17.5	
LOS	A						C	
Approach Delay (s/veh)	--	--	17.5					
Approach LOS	--	--	C					

Copyright © 2007 University of Florida, All Rights Reserved

HCS+™ Version 5.3 Generated: 10/15/2014 3:18 PM

AVERY ROAD / MUIRFIELD DRIVE

TWO-WAY STOP CONTROL SUMMARY

General Information		Site Information	
Analyst	JMH	Intersection	Muirfield/Avery
Agency/Co.	EMHT	Jurisdiction	Dublin
Date Performed	10/13/2014	Analysis Year	2014 Full Build - SCHOOL
Analysis Time Period	AM Peak		

Project Description 20131358 Riviera TIS

East/West Street: Muirfield Dr | North/South Street: Avery Rd

Intersection Orientation: East-West | Study Period (hrs): 0.25

Vehicle Volumes and Adjustments

Major Street	Eastbound			Westbound		
Movement	1	2	3	4	5	6
	L	T	R	L	T	R
Volume (veh/h)	218	416			966	4
Peak-Hour Factor, PHF	0.90	0.90	1.00	1.00	0.90	0.90
Hourly Flow Rate, HFR (veh/h)	242	462	0	0	1073	4
Percent Heavy Vehicles	2	--	--	0	--	--
Median Type	Raised curb					
RT Channelized			0			0
Lanes	1	2	0	0	2	0
Configuration	L	T			T	TR
Upstream Signal		0			1	

Minor Street	Northbound			Southbound		
Movement	7	8	9	10	11	12
	L	T	R	L	T	R
Volume (veh/h)						405
Peak-Hour Factor, PHF	1.00	1.00	1.00	1.00	1.00	0.90
Hourly Flow Rate, HFR (veh/h)	0	0	0	0	0	450
Percent Heavy Vehicles	0	0	0	0	0	2
Percent Grade (%)		0			0	
Flared Approach		N			N	
Storage		0			0	
RT Channelized			0			0
Lanes	0	0	0	0	0	1
Configuration						R

Delay, Queue Length, and Level of Service

Approach	Eastbound	Westbound	Northbound			Southbound		
Movement	1	4	7	8	9	10	11	12
Lane Configuration	L							R
v (veh/h)	242							450
C (m) (veh/h)	648							556
v/c	0.37							0.81
95% queue length	1.73							7.96
Control Delay (s/veh)	13.8							33.4
LOS	B							D
Approach Delay (s/veh)	--	--				33.4		
Approach LOS	--	--				D		

Copyright © 2007 University of Florida, All Rights Reserved

HCS+™ Version 5.3

Generated: 10/15/2014 1:07 PM

7

TWO-WAY STOP CONTROL SUMMARY

General Information		Site Information	
Analyst	JMH	Intersection	Muirfield/Avery
Agency/Co.	EMHT	Jurisdiction	Dublin
Date Performed	10/13/2014	Analysis Year	2024 Full Build - SCHOOL
Analysis Time Period	AM Peak		

Project Description	20131358 Riviera TIS
East/West Street: Muirfield Dr	North/South Street: Avery Rd
Intersection Orientation: East-West	Study Period (hrs): 0.25

Vehicle Volumes and Adjustments

Major Street	Eastbound			Westbound		
Movement	1	2	3	4	5	6
	L	T	R	L	T	R
Volume (veh/h)	363	587			1362	6
Peak-Hour Factor, PHF	0.90	0.90	1.00	1.00	0.90	0.90
Hourly Flow Rate, HFR (veh/h)	403	652	0	0	1513	6
Percent Heavy Vehicles	2	--	--	0	--	--
Median Type	Raised curb					
RT Channelized			0			0
Lanes	1	2	0	0	2	0
Configuration	L	T			T	TR
Upstream Signal		0			1	

Minor Street	Northbound			Southbound		
Movement	7	8	9	10	11	12
	L	T	R	L	T	R
Volume (veh/h)						628
Peak-Hour Factor, PHF	1.00	1.00	1.00	1.00	1.00	0.90
Hourly Flow Rate, HFR (veh/h)	0	0	0	0	0	697
Percent Heavy Vehicles	0	0	0	0	0	2
Percent Grade (%)		0			0	
Flared Approach		N			N	
Storage		0			0	
RT Channelized			0			0
Lanes	0	0	0	0	0	1
Configuration						R

Delay, Queue Length, and Level of Service

Approach	Eastbound	Westbound	Northbound			Southbound		
Movement	1	4	7	8	9	10	11	12
Lane Configuration	L							R
v (veh/h)	403							697
C (m) (veh/h)	451							492
v/c	0.89							1.42
95% queue length	9.65							33.44
Control Delay (s/veh)	50.5							222.1
LOS	F							F
Approach Delay (s/veh)	--	--				222.1		
Approach LOS	--	--				F		

Copyright © 2007 University of Florida, All Rights Reserved HCS+TM Version 5.3 Generated: 10/15/2014 1:10 PM

7

TWO-WAY STOP CONTROL SUMMARY

General Information		Site Information	
Analyst	JMH	Intersection	Muirfield/Avery
Agency/Co.	EMHT	Jurisdiction	Dublin
Date Performed	10/13/2014	Analysis Year	2014 Full Build - SCHOOL
Analysis Time Period	PM Peak		

Project Description	20131358 Riviera TIS
East/West Street: Muirfield Dr	North/South Street: Avery Rd
Intersection Orientation: East-West	Study Period (hrs): 0.25

Vehicle Volumes and Adjustments

Major Street	Eastbound			Westbound		
Movement	1	2	3	4	5	6
	L	T	R	L	T	R
Volume (veh/h)	562	1144			679	14
Peak-Hour Factor, PHF	0.90	0.90	1.00	1.00	0.90	0.90
Hourly Flow Rate, HFR (veh/h)	624	1271	0	0	754	15
Percent Heavy Vehicles	2	--	--	0	--	--
Median Type	Raised curb					
RT Channelized			0			0
Lanes	1	2	0	0	2	0
Configuration	L	T			T	TR
Upstream Signal		0			1	

Minor Street	Northbound			Southbound		
Movement	7	8	9	10	11	12
	L	T	R	L	T	R
Volume (veh/h)						287
Peak-Hour Factor, PHF	1.00	1.00	1.00	1.00	1.00	0.90
Hourly Flow Rate, HFR (veh/h)	0	0	0	0	0	318
Percent Heavy Vehicles	0	0	0	0	0	2
Percent Grade (%)		0			0	
Flared Approach		N			N	
Storage		0			0	
RT Channelized			0			0
Lanes	0	0	0	0	0	1
Configuration						R

Delay, Queue Length, and Level of Service

Approach	Eastbound	Westbound	Northbound			Southbound		
Movement	1	4	7	8	9	10	11	12
Lane Configuration	L							R
v (veh/h)	624							318
C (m) (veh/h)	841							662
v/c	0.74							0.48
95% queue length	6.88							2.61
Control Delay (s/veh)	20.5							15.4
LOS	C							C
Approach Delay (s/veh)	--	--				15.4		
Approach LOS	--	--				C		

Copyright © 2007 University of Florida, All Rights Reserved HCS+™ Version 5.3 Generated: 10/15/2014 1:08 PM

7

TWO-WAY STOP CONTROL SUMMARY

General Information		Site Information	
Analyst	JMH	Intersection	Muirfield/Avery
Agency/Co.	EMHT	Jurisdiction	Dublin
Date Performed	10/13/2014	Analysis Year	2024 Full Build - SCHOOL
Analysis Time Period	PM Peak		

Project Description 20131358 Riviera TIS

East/West Street: Muirfield Dr | North/South Street: Avery Rd

Intersection Orientation: East-West | Study Period (hrs): 0.25

Vehicle Volumes and Adjustments

Major Street	Eastbound			Westbound		
Movement	1	2	3	4	5	6
	L	T	R	L	T	R
Volume (veh/h)	805	1613			958	20
Peak-Hour Factor, PHF	0.90	0.90	1.00	1.00	0.90	0.90
Hourly Flow Rate, HFR (veh/h)	894	1792	0	0	1064	22
Percent Heavy Vehicles	2	--	--	0	--	--
Median Type	Raised curb					
RT Channelized			0			0
Lanes	1	2	0	0	2	0
Configuration	L	T			T	TR
Upstream Signal		0			1	

Minor Street	Northbound			Southbound		
Movement	7	8	9	10	11	12
	L	T	R	L	T	R
Volume (veh/h)						471
Peak-Hour Factor, PHF	1.00	1.00	1.00	1.00	1.00	0.90
Hourly Flow Rate, HFR (veh/h)	0	0	0	0	0	523
Percent Heavy Vehicles	0	0	0	0	0	2
Percent Grade (%)		0			0	
Flared Approach		N			N	
Storage		0			0	
RT Channelized			0			0
Lanes	0	0	0	0	0	1
Configuration						R

Delay, Queue Length, and Level of Service

Approach	Eastbound	Westbound	Northbound			Southbound		
Movement	1	4	7	8	9	10	11	12
Lane Configuration	L							R
v (veh/h)	894							523
C (m) (veh/h)	644							554
v/c	1.39							0.94
95% queue length	39.70							12.20
Control Delay (s/veh)	203.4							52.9
LOS	F							F
Approach Delay (s/veh)	--	--				52.9		
Approach LOS	--	--				F		

Copyright © 2007 University of Florida, All Rights Reserved HCS+TM Version 5.3 Generated: 10/15/2014 1:11 PM

AVERY ROAD / BRAND ROAD

ALL-WAY STOP CONTROL ANALYSIS

General Information

Analyst	JMH
Agency/Co.	EMHT
Date Performed	10/13/2014
Analysis Time Period	AM Peak Hour

Site Information

Intersection	Avery/Brand
Jurisdiction	Dublin
Analysis Year	2014 Full Build - SCHOOL

Project ID 20131358 Riviera TIS

East/West Street: Brand Rd

North/South Street: Avery Rd

Volume Adjustments and Site Characteristics

Approach	Eastbound			Westbound		
Movement	L	T	R	L	T	R
Volume (veh/h)	44	208	79	54	210	47
%Thrus Left Lane						

Approach	Northbound			Southbound		
Movement	L	T	R	L	T	R
Volume (veh/h)	109	121	34	96	224	81
%Thrus Left Lane						

	Eastbound		Westbound		Northbound		Southbound	
	L1	L2	L1	L2	L1	L2	L1	L2
Configuration	L	TR	L	TR	L	TR	L	TR
PHF	0.90	0.90	0.90	0.90	0.90	0.90	0.90	0.90
Flow Rate (veh/h)	48	318	60	285	121	171	106	338
% Heavy Vehicles	13	4	7	5	6	9	2	3
No. Lanes	2		2		2		2	
Geometry Group	5		5		5		5	
Duration, T	0.25							

Saturation Headway Adjustment Worksheet

Prop. Left-Turns	1.0	0.0	1.0	0.0	1.0	0.0	1.0	0.0
Prop. Right-Turns	0.0	0.3	0.0	0.2	0.0	0.2	0.0	0.3
Prop. Heavy Vehicle	0.1	0.0	0.1	0.0	0.1	0.1	0.0	0.0
hLT-adj	0.5	0.5	0.5	0.5	0.5	0.5	0.5	0.5
hRT-adj	-0.7	-0.7	-0.7	-0.7	-0.7	-0.7	-0.7	-0.7
hHV-adj	1.7	1.7	1.7	1.7	1.7	1.7	1.7	1.7
hadj, computed	0.7	-0.1	0.6	-0.0	0.6	0.0	0.5	-0.1

Departure Headway and Service Time

hd, initial value (s)	3.20	3.20	3.20	3.20	3.20	3.20	3.20	3.20
x, initial	0.04	0.28	0.05	0.25	0.11	0.15	0.09	0.30
hd, final value (s)	8.28	7.44	8.23	7.57	8.36	7.76	7.99	7.32
x, final value	0.11	0.66	0.14	0.60	0.28	0.37	0.24	0.69
Move-up time, m (s)	2.3		2.3		2.3		2.3	
Service Time, t_s (s)	6.0	5.1	5.9	5.3	6.1	5.5	5.7	5.0

Capacity and Level of Service

	Eastbound		Westbound		Northbound		Southbound	
	L1	L2	L1	L2	L1	L2	L1	L2
Capacity (veh/h)	298	470	310	460	371	421	356	479
Delay (s/veh)	12.01	23.27	12.23	20.94	14.29	14.92	13.13	24.62
LOS	B	C	B	C	B	B	B	C
Approach: Delay (s/veh)	21.80		19.42		14.66		21.88	
LOS	C		C		B		C	
Intersection Delay (s/veh)	19.81							
Intersection LOS	C							

Copyright © 2007 University of Florida, All Rights Reserved HCS+™ Version 5.3 Generated: 10/20/2014 4:01 PM

ALL-WAY STOP CONTROL ANALYSIS

General Information

Analyst	JMH
Agency/Co.	EMHT
Date Performed	10/13/2014
Analysis Time Period	AM Peak Hour

Site Information

Intersection	Avery/Brand
Jurisdiction	Dublin
Analysis Year	2014 FB w/o HCSD - SCHOOL

Project ID 20131358 Riviera TIS

East/West Street: Brand Rd

North/South Street: Avery Rd

Volume Adjustments and Site Characteristics

Approach	Eastbound			Westbound		
Movement	L	T	R	L	T	R
Volume (veh/h)	50	207	78	54	207	49
%Thrus Left Lane						

Approach	Northbound			Southbound		
Movement	L	T	R	L	T	R
Volume (veh/h)	107	123	34	97	225	98
%Thrus Left Lane						

	Eastbound		Westbound		Northbound		Southbound	
	L1	L2	L1	L2	L1	L2	L1	L2
Configuration	L	TR	L	TR	L	TR	L	TR
PHF	0.90	0.90	0.90	0.90	0.90	0.90	0.90	0.90
Flow Rate (veh/h)	55	316	60	284	118	173	107	358
% Heavy Vehicles	13	4	7	5	6	9	2	3
No. Lanes	2		2		2		2	
Geometry Group	5		5		5		5	
Duration, T	0.25							

Saturation Headway Adjustment Worksheet

Prop. Left-Turns	1.0	0.0	1.0	0.0	1.0	0.0	1.0	0.0
Prop. Right-Turns	0.0	0.3	0.0	0.2	0.0	0.2	0.0	0.3
Prop. Heavy Vehicle	0.1	0.0	0.1	0.0	0.1	0.1	0.0	0.0
hLT-adj	0.5	0.5	0.5	0.5	0.5	0.5	0.5	0.5
hRT-adj	-0.7	-0.7	-0.7	-0.7	-0.7	-0.7	-0.7	-0.7
hHV-adj	1.7	1.7	1.7	1.7	1.7	1.7	1.7	1.7
hadj, computed	0.7	-0.1	0.6	-0.0	0.6	0.0	0.5	-0.2

Departure Headway and Service Time

hd, initial value (s)	3.20	3.20	3.20	3.20	3.20	3.20	3.20	3.20
x, initial	0.05	0.28	0.05	0.25	0.10	0.15	0.10	0.32
hd, final value (s)	8.35	7.51	8.31	7.64	8.43	7.83	8.02	7.32
x, final value	0.13	0.66	0.14	0.60	0.28	0.38	0.24	0.73
Move-up time, m (s)	2.3		2.3		2.3		2.3	
Service Time, t_s (s)	6.1	5.2	6.0	5.3	6.1	5.5	5.7	5.0

Capacity and Level of Service

	Eastbound		Westbound		Northbound		Southbound	
	L1	L2	L1	L2	L1	L2	L1	L2
Capacity (veh/h)	305	466	310	456	368	423	357	481
Delay (s/veh)	12.27	23.58	12.34	21.27	14.32	15.18	13.21	27.24
LOS	B	C	B	C	B	C	B	D
Approach: Delay (s/veh)	21.90		19.71		14.83		24.01	
LOS	C		C		B		C	
Intersection Delay (s/veh)	20.66							
Intersection LOS	C							

Copyright © 2010 University of Florida, All Rights Reserved HCS+™ Version 5.6 Generated: 10/20/2014 2:39 PM

8

ALL-WAY STOP CONTROL ANALYSIS

General Information

Analyst	JMH
Agency/Co.	EMHT
Date Performed	10/13/2014
Analysis Time Period	AM Peak Hour

Site Information

Intersection	Avery/Brand
Jurisdiction	Dublin
Analysis Year	2024 Full Build - SCHOOL

Project ID 20131358 Riviera TIS

East/West Street: Brand Rd

North/South Street: Avery Rd

Volume Adjustments and Site Characteristics

Approach	Eastbound			Westbound		
Movement	L	T	R	L	T	R
Volume (veh/h)	76	291	120	74	289	105
%Thrus Left Lane						

Approach	Northbound			Southbound		
Movement	L	T	R	L	T	R
Volume (veh/h)	155	215	47	169	352	120
%Thrus Left Lane						

	Eastbound		Westbound		Northbound		Southbound	
	L1	L2	L1	L2	L1	L2	L1	L2
Configuration	L	TR	L	TR	L	TR	L	TR
PHF	0.90	0.90	0.90	0.90	0.90	0.90	0.90	0.90
Flow Rate (veh/h)	84	456	82	437	172	290	187	524
% Heavy Vehicles	13	4	7	5	6	9	2	3
No. Lanes	2		2		2		2	
Geometry Group	5		5		5		5	
Duration, T	0.25							

Saturation Headway Adjustment Worksheet

Prop. Left-Turns	1.0	0.0	1.0	0.0	1.0	0.0	1.0	0.0
Prop. Right-Turns	0.0	0.3	0.0	0.3	0.0	0.2	0.0	0.3
Prop. Heavy Vehicle	0.1	0.0	0.1	0.0	0.1	0.1	0.0	0.0
hLT-adj	0.5	0.5	0.5	0.5	0.5	0.5	0.5	0.5
hRT-adj	-0.7	-0.7	-0.7	-0.7	-0.7	-0.7	-0.7	-0.7
hHV-adj	1.7	1.7	1.7	1.7	1.7	1.7	1.7	1.7
hadj, computed	0.7	-0.1	0.6	-0.1	0.6	0.0	0.5	-0.1

Departure Headway and Service Time

hd, initial value (s)	3.20	3.20	3.20	3.20	3.20	3.20	3.20	3.20
x, initial	0.07	0.41	0.07	0.39	0.15	0.26	0.17	0.47
hd, final value (s)	9.94	9.08	9.84	9.12	9.98	9.41	9.67	9.01
x, final value	0.23	1.15	0.22	1.11	0.48	0.76	0.50	1.31
Move-up time, m (s)	2.3		2.3		2.3		2.3	
Service Time, t_s (s)	7.6	6.8	7.5	6.8	7.7	7.1	7.4	6.7

Capacity and Level of Service

	Eastbound		Westbound		Northbound		Southbound	
	L1	L2	L1	L2	L1	L2	L1	L2
Capacity (veh/h)	334	456	332	437	361	383	372	524
Delay (s/veh)	15.61	121.95	15.36	107.42	21.45	36.19	21.74	182.88
LOS	C	F	C	F	C	E	C	F
Approach: Delay (s/veh)	105.41		92.87		30.70		140.50	
LOS	F		F		D		F	
Intersection Delay (s/veh)	98.21							
Intersection LOS	F							

Copyright © 2007 University of Florida, All Rights Reserved

HCS+™ Version 5.3

Generated: 10/15/2014 1:19 PM

ALL-WAY STOP CONTROL ANALYSIS

General Information

Analyst	JMH
Agency/Co.	EMHT
Date Performed	10/13/2014
Analysis Time Period	AM Peak Hour

Site Information

Intersection	Avery/Brand
Jurisdiction	Dublin
Analysis Year	2024 FB w/o HCSD - SCHOOL

Project ID 20131358 Riviera TIS

East/West Street: Brand Rd

North/South Street: Avery Rd

Volume Adjustments and Site Characteristics

Approach	Eastbound			Westbound		
Movement	L	T	R	L	T	R
Volume (veh/h)	82	290	119	74	286	107
%Thrus Left Lane						

Approach	Northbound			Southbound		
Movement	L	T	R	L	T	R
Volume (veh/h)	153	217	47	170	353	137
%Thrus Left Lane						

	Eastbound		Westbound		Northbound		Southbound	
	L1	L2	L1	L2	L1	L2	L1	L2
Configuration	L	TR	L	TR	L	TR	L	TR
PHF	0.90	0.90	0.90	0.90	0.90	0.90	0.90	0.90
Flow Rate (veh/h)	91	454	82	435	170	293	188	544
% Heavy Vehicles	13	4	7	5	6	9	2	3
No. Lanes	2		2		2		2	
Geometry Group	5		5		5		5	
Duration, T	0.25							

Saturation Headway Adjustment Worksheet

Prop. Left-Turns	1.0	0.0	1.0	0.0	1.0	0.0	1.0	0.0
Prop. Right-Turns	0.0	0.3	0.0	0.3	0.0	0.2	0.0	0.3
Prop. Heavy Vehicle	0.1	0.0	0.1	0.0	0.1	0.1	0.0	0.0
hLT-adj	0.5	0.5	0.5	0.5	0.5	0.5	0.5	0.5
hRT-adj	-0.7	-0.7	-0.7	-0.7	-0.7	-0.7	-0.7	-0.7
hHV-adj	1.7	1.7	1.7	1.7	1.7	1.7	1.7	1.7
hadj, computed	0.7	-0.1	0.6	-0.1	0.6	0.0	0.5	-0.1

Departure Headway and Service Time

hd, initial value (s)	3.20	3.20	3.20	3.20	3.20	3.20	3.20	3.20
x, initial	0.08	0.40	0.07	0.39	0.15	0.26	0.17	0.48
hd, final value (s)	9.94	9.09	9.85	9.13	9.99	9.41	9.68	9.00
x, final value	0.25	1.15	0.22	1.10	0.47	0.77	0.51	1.36
Move-up time, m (s)	2.3		2.3		2.3		2.3	
Service Time, t_s (s)	7.6	6.8	7.6	6.8	7.7	7.1	7.4	6.7

Capacity and Level of Service

	Eastbound		Westbound		Northbound		Southbound	
	L1	L2	L1	L2	L1	L2	L1	L2
Capacity (veh/h)	341	454	332	435	361	383	372	544
Delay (s/veh)	15.95	120.52	15.38	106.27	21.29	37.05	21.88	202.74
LOS	C	F	C	F	C	E	C	F
Approach: Delay (s/veh)	103.06		91.86		31.26		156.29	
LOS	F		F		D		F	
Intersection Delay (s/veh)	103.03							
Intersection LOS	F							

Copyright © 2010 University of Florida, All Rights Reserved HCS+™ Version 5.6 Generated: 10/20/2014 2:38 PM

MOVEMENT SUMMARY

Site: 2024 AM Full Build w/ HCSD

Roundabout with 1-lane approaches and circulating road

Roundabout

Movement Performance - Vehicles

Mov ID	Turn	Demand Flow veh/h	HV %	Deg. Satn v/c	Average Delay sec	Level of Service	95% Back of Queue Vehicles veh	95% Back of Queue Distance ft	Prop. Queued	Effective Stop Rate per veh	Average Speed mph
South: Avery Rd											
3L	L	172	6.2	0.758	25.6	LOS C	8.2	217.5	0.94	1.15	26.1
8T	T	239	7.4	0.758	19.2	LOS B	8.2	217.5	0.94	1.13	27.8
8R	R	52	14.6	0.758	20.7	LOS C	8.2	217.5	0.94	1.13	27.6
Approach		463	7.8	0.758	21.7	LOS C	8.2	217.5	0.94	1.14	27.1
East: Brand Rd											
1L	L	82	7.4	0.778	21.3	LOS C	9.0	234.8	0.95	1.18	23.5
6T	T	321	5.4	0.778	15.7	LOS B	9.0	234.8	0.95	1.16	25.2
6R	R	117	3.5	0.778	16.2	LOS B	9.0	234.8	0.95	1.16	24.7
Approach		520	5.3	0.778	16.7	LOS B	9.0	234.8	0.95	1.16	24.8
North: Avery Rd											
7L	L	188	2.1	1.082	74.4	LOS F	37.3	956.5	1.00	2.02	13.6
4T	T	391	3.2	1.082	68.8	LOS F	37.3	956.5	1.00	2.01	14.1
4R	R	133	4.2	1.082	70.0	LOS F	37.3	956.5	1.00	2.01	14.1
Approach		712	3.1	1.082	70.5	LOS E	37.3	956.5	1.00	2.01	14.0
West: Brand Rd											
5L	L	84	13.1	0.924	38.5	LOS D	15.8	412.1	1.00	1.37	21.5
2T	T	323	4.7	0.924	31.7	LOS C	15.8	412.1	1.00	1.38	22.4
2R	R	133	0.9	0.924	32.7	LOS C	15.8	412.1	1.00	1.38	22.3
Approach		541	5.1	0.924	33.0	LOS C	15.8	412.1	1.00	1.38	22.2
All Vehicles		2237	5.1	1.082	38.8	LOS D	37.3	956.5	0.98	1.48	19.7

Level of Service (LOS) Method: Delay & v/c (HCM 2010).
Roundabout LOS Method: Same as Signalised Intersections.
Vehicle movement LOS values are based on average delay and v/c ratio (degree of saturation) per movement
LOS F will result if v/c > 1 irrespective of movement delay value (does not apply for approaches and intersection).
Intersection and Approach LOS values are based on average delay for all movements (v/c not used as specified in HCM 2010).
Roundabout Capacity Model: SIDRA Standard.
SIDRA Standard Delay Model used.

Copyright © 2000-2011 Akcelik and Associates Pty Ltd
www.sidrasolutions.com

SIDRA INTERSECTION

MOVEMENT SUMMARY

Site: 2024 AM Full Build w/o HCSD

Roundabout with 1-lane approaches and circulating road

Roundabout

Movement Performance - Vehicles											
Mov ID	Turn	Demand Flow veh/h	HV %	Deg. Satn v/c	Average Delay sec	Level of Service	95% Back of Queue Vehicles veh	95% Back of Queue Distance ft	Prop. Queued	Effective Stop Rate per veh	Average Speed mph
South: Avery Rd											
3L	L	170	6.2	0.762	25.8	LOS C	8.3	220.3	0.95	1.16	26.0
8T	T	241	7.4	0.762	19.4	LOS B	8.3	220.3	0.95	1.13	27.7
8R	R	52	14.6	0.762	20.9	LOS C	8.3	220.3	0.95	1.14	27.5
Approach		463	7.8	0.762	21.9	LOS C	8.3	220.3	0.95	1.14	27.0
East: Brand Rd											
1L	L	82	7.4	0.781	21.5	LOS C	9.1	237.4	0.95	1.19	23.3
6T	T	318	5.4	0.781	16.0	LOS B	9.1	237.4	0.95	1.16	25.0
6R	R	119	3.5	0.781	16.5	LOS B	9.1	237.4	0.95	1.17	24.5
Approach		519	5.3	0.781	17.0	LOS B	9.1	237.4	0.95	1.17	24.6
North: Avery Rd											
7L	L	189	2.1	1.106	83.1	LOS F	41.8	1071.4	1.00	2.15	12.6
4T	T	392	3.2	1.106	77.5	LOS F	41.8	1071.4	1.00	2.14	13.0
4R	R	152	4.2	1.106	78.7	LOS F	41.8	1071.4	1.00	2.14	12.9
Approach		733	3.1	1.106	79.2	LOS E	41.8	1071.4	1.00	2.14	12.9
West: Brand Rd											
5L	L	91	13.1	0.921	37.8	LOS D	15.7	408.5	1.00	1.36	21.7
2T	T	322	4.7	0.921	31.0	LOS C	15.7	408.5	1.00	1.37	22.7
2R	R	132	0.9	0.921	31.9	LOS C	15.7	408.5	1.00	1.38	22.5
Approach		546	5.2	0.921	32.3	LOS C	15.7	408.5	1.00	1.37	22.5
All Vehicles		2261	5.1	1.106	41.9	LOS D	41.8	1071.4	0.98	1.53	18.9

Level of Service (LOS) Method: Delay & v/c (HCM 2010).
Roundabout LOS Method: Same as Signalised Intersections.
Vehicle movement LOS values are based on average delay and v/c ratio (degree of saturation) per movement
LOS F will result if v/c > 1 irrespective of movement delay value (does not apply for approaches and intersection).
Intersection and Approach LOS values are based on average delay for all movements (v/c not used as specified in HCM 2010).
Roundabout Capacity Model: SIDRA Standard.
SIDRA Standard Delay Model used.

Copyright © 2000-2011 Akcelik and Associates Pty Ltd
www.sidrasolutions.com

MOVEMENT SUMMARY

Site: 2024 AM Full Build w/ HCSD - Expanded

Roundabout with thru/left & thru/right lanes on NB & SB approaches, 1 lane on EB & WB approaches, 2 circulating lanes NB & SB, and 1 circulating lane EB & WB
Roundabout

Movement Performance - Vehicles

Mov ID	Turn	Demand Flow veh/h	HV %	Deg. Satn v/c	Average Delay sec	Level of Service	95% Back of Queue Vehicles veh	95% Back of Queue Distance ft	Prop. Queued	Effective Stop Rate per veh	Average Speed mph
South: Avery Rd											
3L	L	172	6.2	0.285	17.7	LOS B	1.6	43.3	0.69	0.87	30.1
8T	T	239	7.4	0.285	9.3	LOS A	1.7	46.2	0.69	0.70	33.3
8R	R	52	14.6	0.285	11.3	LOS B	1.7	46.2	0.69	0.80	33.5
Approach		463	7.8	0.285	12.6	LOS B	1.7	46.2	0.69	0.77	32.0
East: Brand Rd											
1L	L	82	7.4	0.671	14.8	LOS B	4.5	117.3	0.70	1.06	26.5
6T	T	321	5.4	0.671	8.0	LOS A	4.5	117.3	0.70	0.81	29.0
6R	R	117	3.5	0.671	8.5	LOS A	4.5	117.3	0.70	0.89	28.7
Approach		520	5.3	0.671	9.2	LOS A	4.5	117.3	0.70	0.87	28.5
North: Avery Rd											
7L	L	188	2.1	0.402	16.5	LOS B	2.5	63.7	0.72	0.90	30.0
4T	T	391	3.2	0.402	9.3	LOS A	2.6	67.7	0.72	0.71	33.0
4R	R	133	4.2	0.402	10.8	LOS B	2.6	67.7	0.72	0.79	33.3
Approach		712	3.1	0.402	11.5	LOS B	2.6	67.7	0.72	0.77	32.2
West: Brand Rd											
5L	L	84	13.1	0.762	20.9	LOS C	5.9	153.2	0.80	1.09	29.1
2T	T	323	4.7	0.762	12.5	LOS B	5.9	153.2	0.80	0.99	32.1
2R	R	133	0.9	0.762	13.6	LOS B	5.9	153.2	0.80	1.02	31.8
Approach		541	5.1	0.762	14.1	LOS B	5.9	153.2	0.80	1.01	31.5
All Vehicles		2237	5.1	0.762	11.8	LOS B	5.9	153.2	0.73	0.85	31.1

Level of Service (LOS) Method: Delay & v/c (HCM 2010).
Roundabout LOS Method: Same as Signalised Intersections.
Vehicle movement LOS values are based on average delay and v/c ratio (degree of saturation) per movement
LOS F will result if v/c > 1 irrespective of movement delay value (does not apply for approaches and intersection).
Intersection and Approach LOS values are based on average delay for all movements (v/c not used as specified in HCM 2010).
Roundabout Capacity Model: SIDRA Standard.
SIDRA Standard Delay Model used.

Copyright © 2000-2011 Akcelik and Associates Pty Ltd
www.sidrasolutions.com

SIDRA INTERSECTION

MOVEMENT SUMMARY

Site: 2024 AM Full Build w/o HCSD - Expanded

Roundabout with thru/left & thru/right lanes on NB & SB approaches, 1 lane on EB & WB approaches, 2 circulating lanes NB & SB, and 1 circulating lane EB & WB
Roundabout

Movement Performance - Vehicles

Mov ID	Turn	Demand Flow veh/h	HV %	Deg. Satn v/c	Average Delay sec	Level of Service	95% Back of Queue Vehicles veh	95% Back of Queue Distance ft	Prop. Queued	Effective Stop Rate per veh	Average Speed mph
South: Avery Rd											
3L	L	170	6.2	0.287	17.7	LOS B	1.7	43.9	0.70	0.87	30.1
8T	T	241	7.4	0.287	9.4	LOS A	1.8	46.9	0.70	0.70	33.3
8R	R	52	14.6	0.287	11.3	LOS B	1.8	46.9	0.70	0.80	33.5
Approach		463	7.8	0.287	12.7	LOS B	1.8	46.9	0.70	0.78	32.0
East: Brand Rd											
1L	L	82	7.4	0.673	14.8	LOS B	4.5	117.8	0.70	1.06	26.5
6T	T	318	5.4	0.673	8.0	LOS A	4.5	117.8	0.70	0.82	29.0
6R	R	119	3.5	0.673	8.6	LOS A	4.5	117.8	0.70	0.90	28.7
Approach		519	5.3	0.673	9.2	LOS A	4.5	117.8	0.70	0.88	28.5
North: Avery Rd											
7L	L	189	2.1	0.412	16.6	LOS B	2.6	66.2	0.72	0.90	30.0
4T	T	392	3.2	0.412	9.3	LOS A	2.7	69.8	0.72	0.71	33.0
4R	R	152	4.2	0.412	10.8	LOS B	2.7	69.8	0.72	0.79	33.2
Approach		733	3.1	0.412	11.5	LOS B	2.7	69.8	0.72	0.78	32.2
West: Brand Rd											
5L	L	91	13.1	0.772	21.2	LOS C	6.1	159.2	0.81	1.09	29.0
2T	T	322	4.7	0.772	12.8	LOS B	6.1	159.2	0.81	1.00	31.8
2R	R	132	0.9	0.772	13.9	LOS B	6.1	159.2	0.81	1.03	31.6
Approach		546	5.2	0.772	14.5	LOS B	6.1	159.2	0.81	1.02	31.2
All Vehicles		2261	5.1	0.772	11.9	LOS B	6.1	159.2	0.73	0.86	31.0

Level of Service (LOS) Method: Delay & v/c (HCM 2010).
Roundabout LOS Method: Same as Signalised Intersections.
Vehicle movement LOS values are based on average delay and v/c ratio (degree of saturation) per movement
LOS F will result if v/c > 1 irrespective of movement delay value (does not apply for approaches and intersection).
Intersection and Approach LOS values are based on average delay for all movements (v/c not used as specified in HCM 2010).
Roundabout Capacity Model: SIDRA Standard.
SIDRA Standard Delay Model used.

Copyright © 2000-2011 Akcelik and Associates Pty Ltd
www.sidrasolutions.com

ALL-WAY STOP CONTROL ANALYSIS

General Information

Analyst	JMH
Agency/Co.	EMHT
Date Performed	10/13/2014
Analysis Time Period	PM Peak Hour

Site Information

Intersection	Avery/Brand
Jurisdiction	Dublin
Analysis Year	2014 Full Build - SCHOOL

Project ID 20131358 Riviera TIS

East/West Street: Brand Rd

North/South Street: Avery Rd

Volume Adjustments and Site Characteristics

Approach	Eastbound			Westbound		
Movement	L	T	R	L	T	R
Volume (veh/h)	59	170	43	25	133	140
%Thrus Left Lane						

Approach	Northbound			Southbound		
Movement	L	T	R	L	T	R
Volume (veh/h)	59	248	26	70	176	39
%Thrus Left Lane						

	Eastbound		Westbound		Northbound		Southbound	
	L1	L2	L1	L2	L1	L2	L1	L2
Configuration	L	TR	L	TR	L	TR	L	TR
PHF	0.90	0.90	0.90	0.90	0.90	0.90	0.90	0.90
Flow Rate (veh/h)	65	235	27	302	65	303	77	238
% Heavy Vehicles	4	0	5	2	0	1	1	3
No. Lanes	2		2		2		2	
Geometry Group	5		5		5		5	
Duration, T	0.25							

Saturation Headway Adjustment Worksheet

Prop. Left-Turns	1.0	0.0	1.0	0.0	1.0	0.0	1.0	0.0
Prop. Right-Turns	0.0	0.2	0.0	0.5	0.0	0.1	0.0	0.2
Prop. Heavy Vehicle	0.0	0.0	0.0	0.0	0.0	0.0	0.0	0.0
hLT-adj	0.5	0.5	0.5	0.5	0.5	0.5	0.5	0.5
hRT-adj	-0.7	-0.7	-0.7	-0.7	-0.7	-0.7	-0.7	-0.7
hHV-adj	1.7	1.7	1.7	1.7	1.7	1.7	1.7	1.7
hadj, computed	0.6	-0.1	0.6	-0.3	0.5	-0.0	0.5	-0.1

Departure Headway and Service Time

hd, initial value (s)	3.20	3.20	3.20	3.20	3.20	3.20	3.20	3.20
x, initial	0.06	0.21	0.02	0.27	0.06	0.27	0.07	0.21
hd, final value (s)	7.84	7.13	7.79	6.88	7.60	7.05	7.73	7.14
x, final value	0.14	0.47	0.06	0.58	0.14	0.59	0.17	0.47
Move-up time, m (s)	2.3		2.3		2.3		2.3	
Service Time, t_s (s)	5.5	4.8	5.5	4.6	5.3	4.8	5.4	4.8

Capacity and Level of Service

	Eastbound		Westbound		Northbound		Southbound	
	L1	L2	L1	L2	L1	L2	L1	L2
Capacity (veh/h)	315	480	277	502	315	492	327	481
Delay (s/veh)	11.83	15.89	10.98	18.57	11.51	19.54	11.95	16.04
LOS	B	C	B	C	B	C	B	C
Approach: Delay (s/veh)	15.01		17.94		18.12		15.04	
LOS	C		C		C		C	
Intersection Delay (s/veh)	16.63							
Intersection LOS	C							

Copyright © 2007 University of Florida, All Rights Reserved HCS+™ Version 5.3 Generated: 10/15/2014 1:16 PM

8

ALL-WAY STOP CONTROL ANALYSIS

General Information

Analyst	JMH
Agency/Co.	EMHT
Date Performed	10/13/2014
Analysis Time Period	PM Peak Hour

Site Information

Intersection	Avery/Brand
Jurisdiction	Dublin
Analysis Year	2014 FB w/o HCSD - SCHOOL

Project ID 20131358 Riviera TIS

East/West Street: Brand Rd

North/South Street: Avery Rd

Volume Adjustments and Site Characteristics

Approach	Eastbound			Westbound		
Movement	L	T	R	L	T	R
Volume (veh/h)	77	169	45	25	132	141
%Thrus Left Lane						

Approach	Northbound			Southbound		
Movement	L	T	R	L	T	R
Volume (veh/h)	59	248	26	70	174	38
%Thrus Left Lane						

	Eastbound		Westbound		Northbound		Southbound	
	L1	L2	L1	L2	L1	L2	L1	L2
Configuration	L	TR	L	TR	L	TR	L	TR
PHF	0.90	0.90	0.90	0.90	0.90	0.90	0.90	0.90
Flow Rate (veh/h)	85	237	27	302	65	303	77	235
% Heavy Vehicles	4	0	5	2	0	1	1	3
No. Lanes	2		2		2		2	
Geometry Group	5		5		5		5	
Duration, T	0.25							

Saturation Headway Adjustment Worksheet

Prop. Left-Turns	1.0	0.0	1.0	0.0	1.0	0.0	1.0	0.0
Prop. Right-Turns	0.0	0.2	0.0	0.5	0.0	0.1	0.0	0.2
Prop. Heavy Vehicle	0.0	0.0	0.0	0.0	0.0	0.0	0.0	0.0
hLT-adj	0.5	0.5	0.5	0.5	0.5	0.5	0.5	0.5
hRT-adj	-0.7	-0.7	-0.7	-0.7	-0.7	-0.7	-0.7	-0.7
hHV-adj	1.7	1.7	1.7	1.7	1.7	1.7	1.7	1.7
hadj, computed	0.6	-0.1	0.6	-0.3	0.5	-0.0	0.5	-0.1

Departure Headway and Service Time

hd, initial value (s)	3.20	3.20	3.20	3.20	3.20	3.20	3.20	3.20
x, initial	0.08	0.21	0.02	0.27	0.06	0.27	0.07	0.21
hd, final value (s)	7.85	7.14	7.84	6.93	7.66	7.11	7.79	7.20
x, final value	0.19	0.47	0.06	0.58	0.14	0.60	0.17	0.47
Move-up time, m (s)	2.3		2.3		2.3		2.3	
Service Time, t_s (s)	5.6	4.8	5.5	4.6	5.4	4.8	5.5	4.9

Capacity and Level of Service

	Eastbound		Westbound		Northbound		Southbound	
	L1	L2	L1	L2	L1	L2	L1	L2
Capacity (veh/h)	335	481	277	499	315	489	327	477
Delay (s/veh)	12.33	16.00	11.03	18.81	11.59	19.87	12.05	16.13
LOS	B	C	B	C	B	C	B	C
Approach: Delay (s/veh)	15.03		18.17		18.40		15.13	
LOS	C		C		C		C	
Intersection Delay (s/veh)	16.76							
Intersection LOS	C							

Copyright © 2007 University of Florida, All Rights Reserved

HCS+™ Version 5.3

Generated: 10/15/2014 3:23 PM

ALL-WAY STOP CONTROL ANALYSIS

General Information

Analyst	JMH
Agency/Co.	EMHT
Date Performed	10/13/2014
Analysis Time Period	PM Peak Hour

Site Information

Intersection	Avery/Brand
Jurisdiction	Dublin
Analysis Year	2024 Full Build - SCHOOL

Project ID 20131358 Riviera TIS

East/West Street: Brand Rd

North/South Street: Avery Rd

Volume Adjustments and Site Characteristics

Approach	Eastbound			Westbound		
Movement	L	T	R	L	T	R
Volume (veh/h)	93	249	71	35	200	239
%Thrus Left Lane						

Approach	Northbound			Southbound		
Movement	L	T	R	L	T	R
Volume (veh/h)	101	402	36	143	304	65
%Thrus Left Lane						

	Eastbound		Westbound		Northbound		Southbound	
	L1	L2	L1	L2	L1	L2	L1	L2
Configuration	L	TR	L	TR	L	TR	L	TR
PHF	0.90	0.90	0.90	0.90	0.90	0.90	0.90	0.90
Flow Rate (veh/h)	103	354	38	487	112	486	158	409
% Heavy Vehicles	4	0	5	2	0	1	1	3
No. Lanes	2		2		2		2	
Geometry Group	5		5		5		5	
Duration, T	0.25							

Saturation Headway Adjustment Worksheet

Prop. Left-Turns	1.0	0.0	1.0	0.0	1.0	0.0	1.0	0.0
Prop. Right-Turns	0.0	0.2	0.0	0.5	0.0	0.1	0.0	0.2
Prop. Heavy Vehicle	0.0	0.0	0.0	0.0	0.0	0.0	0.0	0.0
hLT-adj	0.5	0.5	0.5	0.5	0.5	0.5	0.5	0.5
hRT-adj	-0.7	-0.7	-0.7	-0.7	-0.7	-0.7	-0.7	-0.7
hHV-adj	1.7	1.7	1.7	1.7	1.7	1.7	1.7	1.7
hadj, computed	0.6	-0.2	0.6	-0.3	0.5	-0.0	0.5	-0.1

Departure Headway and Service Time

hd, initial value (s)	3.20	3.20	3.20	3.20	3.20	3.20	3.20	3.20
x, initial	0.09	0.31	0.03	0.43	0.10	0.43	0.14	0.36
hd, final value (s)	9.91	9.19	9.87	8.94	9.72	9.18	9.72	9.13
x, final value	0.28	0.90	0.10	1.21	0.30	1.24	0.43	1.04
Move-up time, m (s)	2.3		2.3		2.3		2.3	
Service Time, t_s (s)	7.6	6.9	7.6	6.6	7.4	6.9	7.4	6.8

Capacity and Level of Service

	Eastbound		Westbound		Northbound		Southbound	
	L1	L2	L1	L2	L1	L2	L1	L2
Capacity (veh/h)	353	392	288	487	362	486	371	409
Delay (s/veh)	16.49	55.07	13.71	142.80	16.57	155.11	19.45	85.92
LOS	C	F	B	F	C	F	C	F
Approach: Delay (s/veh)	46.38		133.46		129.17		67.40	
LOS	E		F		F		F	
Intersection Delay (s/veh)	96.28							
Intersection LOS	F							

Copyright © 2007 University of Florida, All Rights Reserved HCS+™ Version 5.3 Generated: 10/15/2014 1:21 PM

8

ALL-WAY STOP CONTROL ANALYSIS

General Information

Analyst	JMH
Agency/Co.	EMHT
Date Performed	10/13/2014
Analysis Time Period	PM Peak Hour

Site Information

Intersection	Avery/Brand
Jurisdiction	Dublin
Analysis Year	2024 FB w/o HCSD - SCHOOL

Project ID 20131358 Riviera TIS

East/West Street: Brand Rd

North/South Street: Avery Rd

Volume Adjustments and Site Characteristics

Approach	Eastbound			Westbound		
Movement	L	T	R	L	T	R
Volume (veh/h)	111	248	73	35	199	240
%Thrus Left Lane						

Approach	Northbound			Southbound		
Movement	L	T	R	L	T	R
Volume (veh/h)	101	402	36	143	302	64
%Thrus Left Lane						

	Eastbound		Westbound		Northbound		Southbound	
	L1	L2	L1	L2	L1	L2	L1	L2
Configuration	L	TR	L	TR	L	TR	L	TR
PHF	0.90	0.90	0.90	0.90	0.90	0.90	0.90	0.90
Flow Rate (veh/h)	123	356	38	487	112	486	158	406
% Heavy Vehicles	4	0	5	2	0	1	1	3
No. Lanes	2		2		2		2	
Geometry Group	5		5		5		5	
Duration, T	0.25							

Saturation Headway Adjustment Worksheet

Prop. Left-Turns	1.0	0.0	1.0	0.0	1.0	0.0	1.0	0.0
Prop. Right-Turns	0.0	0.2	0.0	0.5	0.0	0.1	0.0	0.2
Prop. Heavy Vehicle	0.0	0.0	0.0	0.0	0.0	0.0	0.0	0.0
hLT-adj	0.5	0.5	0.5	0.5	0.5	0.5	0.5	0.5
hRT-adj	-0.7	-0.7	-0.7	-0.7	-0.7	-0.7	-0.7	-0.7
hHV-adj	1.7	1.7	1.7	1.7	1.7	1.7	1.7	1.7
hadj, computed	0.6	-0.2	0.6	-0.3	0.5	-0.0	0.5	-0.1

Departure Headway and Service Time

hd, initial value (s)	3.20	3.20	3.20	3.20	3.20	3.20	3.20	3.20
x, initial	0.11	0.32	0.03	0.43	0.10	0.43	0.14	0.36
hd, final value (s)	9.91	9.19	9.90	8.97	9.74	9.20	9.74	9.15
x, final value	0.34	0.91	0.10	1.21	0.30	1.24	0.43	1.03
Move-up time, m (s)	2.3		2.3		2.3		2.3	
Service Time, t_s (s)	7.6	6.9	7.6	6.7	7.4	6.9	7.4	6.9

Capacity and Level of Service

	Eastbound		Westbound		Northbound		Southbound	
	L1	L2	L1	L2	L1	L2	L1	L2
Capacity (veh/h)	364	392	288	487	362	486	370	406
Delay (s/veh)	17.60	55.91	13.75	144.44	16.62	156.50	19.51	84.61
LOS	C	F	B	F	C	F	C	F
Approach: Delay (s/veh)	46.07		134.98		130.30		66.38	
LOS	E		F		F		F	
Intersection Delay (s/veh)	96.16							
Intersection LOS	F							

Copyright © 2007 University of Florida, All Rights Reserved HCS+™ Version 5.3 Generated: 10/15/2014 3:27 PM

MOVEMENT SUMMARY

Site: 2024 PM Full Build w/ HCSD 8

Roundabout with 1-lane approaches and circulating road

Roundabout

Movement Performance - Vehicles											
Mov ID	Turn	Demand Flow veh/h	HV %	Deg Satn v/c	Average Delay sec	Level of Service	95% Back of Queue Vehicles veh	95% Back of Queue Distance ft	Prop. Queued	Effective Stop Rate per veh	Average Speed mph
South: Avery Rd											
3L	L	112	0.0	0.825	26.0	LOS C	11.1	280.7	0.98	1.20	26.0
8T	T	447	1.4	0.825	19.6	LOS B	11.1	280.7	0.98	1.19	27.6
8R	R	40	0.0	0.825	20.7	LOS C	11.1	280.7	0.98	1.19	27.5
Approach		599	1.0	0.825	20.9	LOS C	11.1	280.7	0.98	1.19	27.3
East: Brand Rd											
1L	L	39	4.9	0.888	31.1	LOS C	13.6	344.8	1.00	1.38	20.1
6T	T	222	3.2	0.888	25.5	LOS C	13.6	344.8	1.00	1.38	21.2
6R	R	266	0.0	0.888	26.0	LOS C	13.6	344.8	1.00	1.38	20.7
Approach		527	1.7	0.888	26.2	LOS C	13.6	344.8	1.00	1.38	20.9
North: Avery Rd											
7L	L	159	0.8	0.681	18.1	LOS B	6.7	170.2	0.80	0.96	28.9
4T	T	338	2.9	0.681	12.6	LOS B	6.7	170.2	0.80	0.89	31.9
4R	R	72	4.8	0.681	13.8	LOS B	6.7	170.2	0.80	0.92	31.7
Approach		569	2.6	0.681	14.3	LOS B	6.7	170.2	0.80	0.91	31.0
West: Brand Rd											
5L	L	103	4.3	0.661	21.1	LOS C	6.1	155.0	0.86	1.07	28.3
2T	T	277	1.2	0.661	14.5	LOS B	6.1	155.0	0.86	1.01	30.5
2R	R	79	0.0	0.661	15.6	LOS B	6.1	155.0	0.86	1.02	30.3
Approach		459	1.7	0.661	16.2	LOS B	6.1	155.0	0.86	1.02	29.9
All Vehicles		2153	1.7	0.888	19.4	LOS B	13.6	344.8	0.91	1.13	26.8

Level of Service (LOS) Method: Delay & v/c (HCM 2010).
Roundabout LOS Method: Same as Signalised Intersections.
Vehicle movement LOS values are based on average delay and v/c ratio (degree of saturation) per movement
LOS F will result if v/c > 1 irrespective of movement delay value (does not apply for approaches and intersection).
Intersection and Approach LOS values are based on average delay for all movements (v/c not used as specified in HCM 2010).
Roundabout Capacity Model: SIDRA Standard.
SIDRA Standard Delay Model used.

Copyright © 2000-2011 Akcelik and Associates Pty Ltd
www.sidrasolutions.com

MOVEMENT SUMMARY

Site: 2024 PM Full Build w/o HCSD

Roundabout with 1-lane approaches and circulating road

Roundabout

Movement Performance - Vehicles

Mov ID	Turn	Demand Flow veh/h	HV %	Deg. Satn v/c	Average Delay sec	Level of Service	95% Back of Queue Vehicles veh	95% Back of Queue Distance ft	Prop. Queued	Effective Stop Rate per veh	Average Speed mph
South: Avery Rd											
3L	L	112	0.0	0.845	27.5	LOS C	12.0	302.5	1.00	1.23	25.3
8T	T	447	1.4	0.845	21.1	LOS C	12.0	302.5	1.00	1.23	26.8
8R	R	40	0.0	0.845	22.2	LOS C	12.0	302.5	1.00	1.23	26.7
Approach		599	1.0	0.845	22.4	LOS C	12.0	302.5	1.00	1.23	26.5
East: Brand Rd											
1L	L	39	4.9	0.910	34.3	LOS C	14.9	377.1	1.00	1.43	19.2
6T	T	221	3.2	0.910	28.7	LOS C	14.9	377.1	1.00	1.43	20.2
6R	R	267	0.0	0.910	29.2	LOS C	14.9	377.1	1.00	1.44	19.7
Approach		527	1.7	0.910	29.4	LOS C	14.9	377.1	1.00	1.44	19.9
North: Avery Rd											
7L	L	159	0.8	0.677	18.0	LOS B	6.6	167.3	0.80	0.96	29.0
4T	T	336	2.9	0.677	12.5	LOS B	6.6	167.3	0.80	0.88	32.0
4R	R	71	4.8	0.677	13.7	LOS B	6.6	167.3	0.80	0.91	31.7
Approach		566	2.5	0.677	14.2	LOS B	6.6	167.3	0.80	0.91	31.0
West: Brand Rd											
5L	L	123	4.3	0.690	21.7	LOS C	6.7	170.9	0.88	1.09	27.9
2T	T	276	1.2	0.690	15.1	LOS B	6.7	170.9	0.88	1.03	30.1
2R	R	81	0.0	0.690	16.2	LOS B	6.7	170.9	0.88	1.04	29.9
Approach		480	1.8	0.690	17.0	LOS B	6.7	170.9	0.88	1.05	29.5
All Vehicles		2171	1.8	0.910	20.8	LOS C	14.9	377.1	0.92	1.16	26.1

Level of Service (LOS) Method: Delay & v/c (HCM 2010).
Roundabout LOS Method: Same as Signalised Intersections.
Vehicle movement LOS values are based on average delay and v/c ratio (degree of saturation) per movement
LOS F will result if v/c > 1 irrespective of movement delay value (does not apply for approaches and intersection).
Intersection and Approach LOS values are based on average delay for all movements (v/c not used as specified in HCM 2010).
Roundabout Capacity Model: SIDRA Standard.
SIDRA Standard Delay Model used.

Copyright © 2000-2011 Akcelik and Associates Pty Ltd
www.sidrasolutions.com

MOVEMENT SUMMARY

Site: 2024 PM Full Build w/ HCSD - Expanded

Roundabout with thru/left & thru/right lanes on NB & SB approaches, 1 lane on EB & WB approaches, 2 circulating lanes NB & SB, and 1 circulating lane EB & WB

Roundabout

Movement Performance - Vehicles

Mov ID	Turn	Demand Flow veh/h	HV %	Deg. Satn v/c	Average Delay sec	Level of Service	95% Back of Queue Vehicles veh	95% Back of Queue Distance ft	Prop. Queued	Effective Stop Rate per veh	Average Speed mph
South: Avery Rd											
3L	L	112	0.0	0.309	16.7	LOS B	1.8	44.6	0.63	0.88	30.9
8T	T	447	1.4	0.309	8.5	LOS A	1.9	47.0	0.63	0.65	33.7
8R	R	40	0.0	0.309	10.0	LOS A	1.9	47.0	0.63	0.75	33.8
Approach		599	1.0	0.309	10.2	LOS B	1.9	47.0	0.63	0.70	33.1
East: Brand Rd											
1L	L	39	4.9	0.691	15.3	LOS B	4.6	117.2	0.73	1.07	26.3
6T	T	222	3.2	0.691	8.5	LOS A	4.6	117.2	0.73	0.88	28.8
6R	R	266	0.0	0.691	9.0	LOS A	4.6	117.2	0.73	0.93	28.4
Approach		527	1.7	0.691	9.2	LOS A	4.6	117.2	0.73	0.92	28.4
North: Avery Rd											
7L	L	159	0.8	0.265	14.7	LOS B	1.4	36.4	0.52	0.81	30.9
4T	T	338	2.9	0.265	7.6	LOS A	1.5	37.9	0.52	0.58	34.3
4R	R	72	4.8	0.265	9.3	LOS A	1.5	37.9	0.52	0.69	34.2
Approach		569	2.6	0.265	9.8	LOS A	1.5	37.9	0.52	0.66	33.2
West: Brand Rd											
5L	L	103	4.3	0.561	17.3	LOS B	3.0	77.0	0.61	1.01	30.8
2T	T	277	1.2	0.561	9.1	LOS A	3.0	77.0	0.61	0.73	33.7
2R	R	79	0.0	0.561	10.3	LOS B	3.0	77.0	0.61	0.80	33.6
Approach		459	1.7	0.561	11.1	LOS B	3.0	77.0	0.61	0.80	32.9
All Vehicles		2153	1.7	0.691	10.1	LOS B	4.6	117.2	0.62	0.76	31.9

Level of Service (LOS) Method: Delay & v/c (HCM 2010).
Roundabout LOS Method: Same as Signalised Intersections.
Vehicle movement LOS values are based on average delay and v/c ratio (degree of saturation) per movement
LOS F will result if v/c > 1 irrespective of movement delay value (does not apply for approaches and intersection).
Intersection and Approach LOS values are based on average delay for all movements (v/c not used as specified in HCM 2010).
Roundabout Capacity Model: SIDRA Standard.
SIDRA Standard Delay Model used.

Copyright © 2000-2011 Akcelik and Associates Pty Ltd
www.sidrasolutions.com

MOVEMENT SUMMARY

Site: 2024 PM Full Build w/o HCSD - Expanded

Roundabout with thru/left & thru/right lanes on NB & SB approaches, 1 lane on EB & WB approaches, 2 circulating lanes NB & SB, and 1 circulating lane EB & WB
Roundabout

Movement Performance - Vehicles

Mov ID	Turn	Demand Flow veh/h	HV %	Deg Satn v/c	Average Delay sec	Level of Service	95% Back of Queue Vehicles veh	95% Back of Queue Distance ft	Prop. Queued	Effective Stop Rate per veh	Average Speed mph
South: Avery Rd											
3L	L	112	0.0	0.315	16.9	LOS B	1.8	46.1	0.65	0.88	30.8
8T	T	447	1.4	0.315	8.7	LOS A	1.9	48.6	0.65	0.66	33.6
8R	R	40	0.0	0.315	10.1	LOS B	1.9	48.6	0.65	0.76	33.7
Approach		599	1.0	0.315	10.3	LOS B	1.9	48.6	0.65	0.71	33.0
East: Brand Rd											
1L	L	39	4.9	0.700	15.5	LOS B	4.8	120.8	0.74	1.08	26.2
6T	T	221	3.2	0.700	8.7	LOS A	4.8	120.8	0.74	0.91	28.8
6R	R	267	0.0	0.700	9.3	LOS A	4.8	120.8	0.74	0.94	28.2
Approach		527	1.7	0.700	9.5	LOS A	4.8	120.8	0.74	0.94	28.3
North: Avery Rd											
7L	L	159	0.8	0.263	14.7	LOS B	1.4	36.2	0.52	0.81	30.9
4T	T	336	2.9	0.263	7.6	LOS A	1.5	37.7	0.52	0.58	34.3
4R	R	71	4.8	0.263	9.3	LOS A	1.5	37.7	0.51	0.69	34.2
Approach		566	2.5	0.263	9.8	LOS A	1.5	37.7	0.52	0.66	33.2
West: Brand Rd											
5L	L	123	4.3	0.587	17.5	LOS B	3.3	84.2	0.62	1.01	30.6
2T	T	276	1.2	0.587	9.3	LOS A	3.3	84.2	0.62	0.75	33.6
2R	R	81	0.0	0.587	10.5	LOS B	3.3	84.2	0.62	0.82	33.5
Approach		480	1.8	0.587	11.6	LOS B	3.3	84.2	0.62	0.83	32.7
All Vehicles		2171	1.8	0.700	10.3	LOS B	4.8	120.8	0.63	0.78	31.8

Level of Service (LOS) Method: Delay & v/c (HCM 2010).
Roundabout LOS Method: Same as Signalised Intersections.
Vehicle movement LOS values are based on average delay and v/c ratio (degree of saturation) per movement
LOS F will result if v/c > 1 irrespective of movement delay value (does not apply for approaches and intersection).
Intersection and Approach LOS values are based on average delay for all movements (v/c not used as specified in HCM 2010).
Roundabout Capacity Model: SIDRA Standard.
SIDRA Standard Delay Model used.

Copyright © 2000-2011 Akcelik and Associates Pty Ltd
www.sidrasolutions.com

AVERY ROAD / MEMORIAL DRIVE

9

TWO-WAY STOP CONTROL SUMMARY

General Information		Site Information	
Analyst	JMH	Intersection	Avery/Memorial
Agency/Co.	EMHT	Jurisdiction	Dublin
Date Performed	10/13/2014	Analysis Year	2014 Full Build - SCHOOL
Analysis Time Period	AM Peak		

Project Description 20131358 Riviera TIS

East/West Street: Memorial Dr | North/South Street: Avery Rd

Intersection Orientation: North-South | Study Period (hrs): 0.25

Vehicle Volumes and Adjustments

Major Street	Northbound			Southbound		
Movement	1	2	3	4	5	6
	L	T	R	L	T	R
Volume (veh/h)		196	27	16	273	
Peak-Hour Factor, PHF	1.00	0.90	0.90	0.90	0.90	1.00
Hourly Flow Rate, HFR (veh/h)	0	217	30	17	303	0
Percent Heavy Vehicles	0	--	--	3	--	--
Median Type	Undivided					
RT Channelized			0			0
Lanes	0	1	0	0	1	0
Configuration			TR	LT		
Upstream Signal		0			0	

Minor Street	Eastbound			Westbound		
Movement	7	8	9	10	11	12
	L	T	R	L	T	R
Volume (veh/h)				46		25
Peak-Hour Factor, PHF	1.00	1.00	1.00	0.90	0.90	0.90
Hourly Flow Rate, HFR (veh/h)	0	0	0	51	0	27
Percent Heavy Vehicles	0	0	0	1	0	6
Percent Grade (%)		0			0	
Flared Approach		N			N	
Storage		0			0	
RT Channelized			0			0
Lanes	0	0	0	0	0	0
Configuration					LR	

Delay, Queue Length, and Level of Service

Approach	Northbound	Southbound	Westbound			Eastbound		
Movement	1	4	7	8	9	10	11	12
Lane Configuration		LT		LR				
v (veh/h)		17		78				
C (m) (veh/h)		1313		556				
v/c		0.01		0.14				
95% queue length		0.04		0.49				
Control Delay (s/veh)		7.8		12.5				
LOS		A		B				
Approach Delay (s/veh)	--	--	12.5					
Approach LOS	--	--	B					

Copyright © 2007 University of Florida, All Rights Reserved HCS+™ Version 5.3 Generated: 10/15/2014 1:27 PM

TWO-WAY STOP CONTROL SUMMARY

General Information

Analyst	JMH
Agency/Co.	EMHT
Date Performed	10/13/2014
Analysis Time Period	AM Peak

Site Information

Intersection	Avery/Memorial
Jurisdiction	Dublin
Analysis Year	2014 FB w/o HCSD - SCHOOL

Project Description 20131358 Riviera TIS

East/West Street: Memorial Dr | North/South Street: Avery Rd

Intersection Orientation: North-South | Study Period (hrs): 0.25

Vehicle Volumes and Adjustments

Major Street	Northbound			Southbound		
Movement	1	2	3	4	5	6
	L	T	R	L	T	R
Volume (veh/h)		206	27	16	292	
Peak-Hour Factor, PHF	1.00	0.90	0.90	0.90	0.90	1.00
Hourly Flow Rate, HFR (veh/h)	0	228	30	17	324	0
Percent Heavy Vehicles	0	--	--	3	--	--
Median Type	Undivided					
RT Channelized			0			0
Lanes	0	1	0	0	1	0
Configuration			TR	LT		
Upstream Signal		0			0	

Minor Street	Eastbound			Westbound		
Movement	7	8	9	10	11	12
	L	T	R	L	T	R
Volume (veh/h)				46		25
Peak-Hour Factor, PHF	1.00	1.00	1.00	0.90	0.90	0.90
Hourly Flow Rate, HFR (veh/h)	0	0	0	51	0	27
Percent Heavy Vehicles	0	0	0	1	0	6
Percent Grade (%)		0			0	
Flared Approach		N			N	
Storage		0			0	
RT Channelized			0			0
Lanes	0	0	0	0	0	0
Configuration					LR	

Delay, Queue Length, and Level of Service

Approach	Northbound	Southbound	Westbound			Eastbound		
Movement	1	4	7	8	9	10	11	12
Lane Configuration		LT		LR				
v (veh/h)		17		78				
C (m) (veh/h)		1301		536				
v/c		0.01		0.15				
95% queue length		0.04		0.51				
Control Delay (s/veh)		7.8		12.9				
LOS		A		B				
Approach Delay (s/veh)	--	--	12.9					
Approach LOS	--	--	B					

Copyright © 2010 University of Florida, All Rights Reserved HCS+™ Version 5.6 Generated: 10/20/2014 2:27 PM

9

TWO-WAY STOP CONTROL SUMMARY

General Information		Site Information	
Analyst	JMH	Intersection	Avery/Memorial
Agency/Co.	EMHT	Jurisdiction	Dublin
Date Performed	10/13/2014	Analysis Year	2024 Full Build - SCHOOL
Analysis Time Period	AM Peak		

Project Description 20131358 Riviera TIS	
East/West Street: Memorial Dr	North/South Street: Avery Rd
Intersection Orientation: North-South	Study Period (hrs): 0.25

Vehicle Volumes and Adjustments

Major Street	Northbound			Southbound		
Movement	1	2	3	4	5	6
	L	T	R	L	T	R
Volume (veh/h)		385	27	16	476	
Peak-Hour Factor, PHF	1.00	0.90	0.90	0.90	0.90	1.00
Hourly Flow Rate, HFR (veh/h)	0	427	30	17	528	0
Percent Heavy Vehicles	0	--	--	3	--	--
Median Type	Undivided					
RT Channelized			0			0
Lanes	0	1	0	0	1	0
Configuration			TR	LT		
Upstream Signal		0			0	

Minor Street	Eastbound			Westbound		
Movement	7	8	9	10	11	12
	L	T	R	L	T	R
Volume (veh/h)				46		25
Peak-Hour Factor, PHF	1.00	1.00	1.00	0.90	0.90	0.90
Hourly Flow Rate, HFR (veh/h)	0	0	0	51	0	27
Percent Heavy Vehicles	0	0	0	1	0	6
Percent Grade (%)		0			0	
Flared Approach		N			N	
Storage		0			0	
RT Channelized			0			0
Lanes	0	0	0	0	0	0
Configuration					LR	

Delay, Queue Length, and Level of Service

Approach	Northbound	Southbound	Westbound			Eastbound		
Movement	1	4	7	8	9	10	11	12
Lane Configuration		LT		LR				
v (veh/h)		17		78				
C (m) (veh/h)		1099		329				
v/c		0.02		0.24				
95% queue length		0.05		0.91				
Control Delay (s/veh)		8.3		19.3				
LOS		A		C				
Approach Delay (s/veh)	--	--	19.3					
Approach LOS	--	--	C					

Copyright © 2007 University of Florida, All Rights Reserved HCS+™ Version 5.3 Generated: 10/15/2014 1:36 PM

TWO-WAY STOP CONTROL SUMMARY

General Information

Analyst	JMH
Agency/Co.	EMHT
Date Performed	10/13/2014
Analysis Time Period	AM Peak

Site Information

Intersection	Avery/Memorial
Jurisdiction	Dublin
Analysis Year	2024 FB w/o HCSD - SCHOOL

Project Description 20131358 Riviera TIS

East/West Street: Memorial Dr | North/South Street: Avery Rd

Intersection Orientation: North-South | Study Period (hrs): 0.25

Vehicle Volumes and Adjustments

Major Street	Northbound			Southbound		
Movement	1	2	3	4	5	6
	L	T	R	L	T	R
Volume (veh/h)		395	27	16	495	
Peak-Hour Factor, PHF	1.00	0.90	0.90	0.90	0.90	1.00
Hourly Flow Rate, HFR (veh/h)	0	438	30	17	550	0
Percent Heavy Vehicles	0	--	--	3	--	--
Median Type	Undivided					
RT Channelized			0			0
Lanes	0	1	0	0	1	0
Configuration			TR	LT		
Upstream Signal		0			0	

Minor Street	Eastbound			Westbound		
Movement	7	8	9	10	11	12
	L	T	R	L	T	R
Volume (veh/h)				46		25
Peak-Hour Factor, PHF	1.00	1.00	1.00	0.90	0.90	0.90
Hourly Flow Rate, HFR (veh/h)	0	0	0	51	0	27
Percent Heavy Vehicles	0	0	0	1	0	6
Percent Grade (%)	0			0		
Flared Approach		N			N	
Storage		0			0	
RT Channelized			0			0
Lanes	0	0	0	0	0	0
Configuration					LR	

Delay, Queue Length, and Level of Service

Approach	Northbound	Southbound	Westbound			Eastbound		
Movement	1	4	7	8	9	10	11	12
Lane Configuration		LT		LR				
v (veh/h)		17		78				
C (m) (veh/h)		1088		316				
v/c		0.02		0.25				
95% queue length		0.05		0.95				
Control Delay (s/veh)		8.4		20.1				
LOS		A		C				
Approach Delay (s/veh)	--	--	20.1					
Approach LOS	--	--	C					

Copyright © 2010 University of Florida, All Rights Reserved HCS+™ Version 5.6 Generated: 10/20/2014 2:28 PM

9

TWO-WAY STOP CONTROL SUMMARY

General Information		Site Information	
Analyst	JMH	Intersection	Avery/Memorial
Agency/Co.	EMHT	Jurisdiction	Dublin
Date Performed	10/13/2014	Analysis Year	2014 Full Build - SCHOOL
Analysis Time Period	PM Peak		

Project Description 20131358 Riviera TIS

East/West Street: Memorial Dr | North/South Street: Avery Rd

Intersection Orientation: North-South | Study Period (hrs): 0.25

Vehicle Volumes and Adjustments

Major Street	Northbound			Southbound		
Movement	1	2	3	4	5	6
	L	T	R	L	T	R
Volume (veh/h)		406	51	29	305	
Peak-Hour Factor, PHF	1.00	0.90	0.90	0.90	0.90	1.00
Hourly Flow Rate, HFR (veh/h)	0	451	56	32	338	0
Percent Heavy Vehicles	0	--	--	3	--	--
Median Type	Undivided					
RT Channelized			0			0
Lanes	0	1	0	0	1	0
Configuration			TR	LT		
Upstream Signal		0			0	

Minor Street	Eastbound			Westbound		
Movement	7	8	9	10	11	12
	L	T	R	L	T	R
Volume (veh/h)				38		39
Peak-Hour Factor, PHF	1.00	1.00	1.00	0.90	0.90	0.90
Hourly Flow Rate, HFR (veh/h)	0	0	0	42	0	43
Percent Heavy Vehicles	0	0	0	1	0	6
Percent Grade (%)		0			0	
Flared Approach		N			N	
Storage		0			0	
RT Channelized			0			0
Lanes	0	0	0	0	0	0
Configuration					LR	

Delay, Queue Length, and Level of Service

Approach	Northbound	Southbound	Westbound			Eastbound		
Movement	1	4	7	8	9	10	11	12
Lane Configuration		LT		LR				
v (veh/h)		32		85				
C (m) (veh/h)		1053		404				
v/c		0.03		0.21				
95% queue length		0.09		0.78				
Control Delay (s/veh)		8.5		16.3				
LOS		A		C				
Approach Delay (s/veh)	--	--	16.3					
Approach LOS	--	--	C					

Copyright © 2007 University of Florida, All Rights Reserved HCS+™ Version 5.3 Generated: 10/15/2014 1:28 PM

9

TWO-WAY STOP CONTROL SUMMARY

General Information

Analyst	JMH
Agency/Co.	EMHT
Date Performed	10/13/2014
Analysis Time Period	PM Peak

Site Information

Intersection	Avery/Memorial
Jurisdiction	Dublin
Analysis Year	2014 FB w/o HCSD - SCHOOL

Project Description 20131358 Riviera TIS

East/West Street: Memorial Dr | North/South Street: Avery Rd

Intersection Orientation: North-South | Study Period (hrs): 0.25

Vehicle Volumes and Adjustments

Major Street	Northbound			Southbound		
Movement	1	2	3	4	5	6
	L	T	R	L	T	R
Volume (veh/h)		425	51	29	302	
Peak-Hour Factor, PHF	1.00	0.90	0.90	0.90	0.90	1.00
Hourly Flow Rate, HFR (veh/h)	0	472	56	32	335	0
Percent Heavy Vehicles	0	--	--	3	--	--
Median Type	Undivided					
RT Channelized			0			0
Lanes	0	1	0	0	1	0
Configuration			TR	LT		
Upstream Signal		0			0	

Minor Street	Eastbound			Westbound		
Movement	7	8	9	10	11	12
	L	T	R	L	T	R
Volume (veh/h)				38		39
Peak-Hour Factor, PHF	1.00	1.00	1.00	0.90	0.90	0.90
Hourly Flow Rate, HFR (veh/h)	0	0	0	42	0	43
Percent Heavy Vehicles	0	0	0	1	0	6
Percent Grade (%)		0			0	
Flared Approach		N			N	
Storage		0			0	
RT Channelized			0			0
Lanes	0	0	0	0	0	0
Configuration					LR	

Delay, Queue Length, and Level of Service

Approach	Northbound	Southbound	Westbound			Eastbound		
Movement	1	4	7	8	9	10	11	12
Lane Configuration		LT		LR				
v (veh/h)		32		85				
C (m) (veh/h)		1034		394				
v/c		0.03		0.22				
95% queue length		0.10		0.81				
Control Delay (s/veh)		8.6		16.6				
LOS		A		C				
Approach Delay (s/veh)	--	--	16.6					
Approach LOS	--	--	C					

Copyright © 2007 University of Florida, All Rights Reserved HCS+™ Version 5.3 Generated: 10/15/2014 3:31 PM

9

TWO-WAY STOP CONTROL SUMMARY

General Information		Site Information	
Analyst	JMH	Intersection	Avery/Memorial
Agency/Co.	EMHT	Jurisdiction	Dublin
Date Performed	10/13/2014	Analysis Year	2024 Full Build - SCHOOL
Analysis Time Period	PM Peak		

Project Description 20131358 Riviera TIS

East/West Street: Memorial Dr | North/South Street: Avery Rd

Intersection Orientation: North-South | Study Period (hrs): 0.25

Vehicle Volumes and Adjustments

Major Street	Northbound			Southbound		
Movement	1	2	3	4	5	6
	L	T	R	L	T	R
Volume (veh/h)		675	51	29	537	
Peak-Hour Factor, PHF	1.00	0.90	0.90	0.90	0.90	1.00
Hourly Flow Rate, HFR (veh/h)	0	750	56	32	596	0
Percent Heavy Vehicles	0	--	--	3	--	--
Median Type	Undivided					
RT Channelized			0			0
Lanes	0	1	0	0	1	0
Configuration			TR	LT		
Upstream Signal		0			0	

Minor Street	Eastbound			Westbound		
Movement	7	8	9	10	11	12
	L	T	R	L	T	R
Volume (veh/h)				38		39
Peak-Hour Factor, PHF	1.00	1.00	1.00	0.90	0.90	0.90
Hourly Flow Rate, HFR (veh/h)	0	0	0	42	0	43
Percent Heavy Vehicles	0	0	0	1	0	6
Percent Grade (%)		0			0	
Flared Approach		N			N	
Storage		0			0	
RT Channelized			0			0
Lanes	0	0	0	0	0	0
Configuration					LR	

Delay, Queue Length, and Level of Service

Approach	Northbound	Southbound	Westbound			Eastbound		
Movement	1	4	7	8	9	10	11	12
Lane Configuration		LT		LR				
v (veh/h)		32		85				
C (m) (veh/h)		814		208				
v/c		0.04		0.41				
95% queue length		0.12		1.85				
Control Delay (s/veh)		9.6		33.8				
LOS		A		D				
Approach Delay (s/veh)	--	--	33.8					
Approach LOS	--	--	D					

Copyright © 2007 University of Florida, All Rights Reserved HCS+™ Version 5.3 Generated: 10/15/2014 1:38 PM

9

TWO-WAY STOP CONTROL SUMMARY

General Information

Analyst	JMH
Agency/Co.	EMHT
Date Performed	10/13/2014
Analysis Time Period	PM Peak

Site Information

Intersection	Avery/Memorial
Jurisdiction	Dublin
Analysis Year	2024 FB w/o HCSD - SCHOOL

Project Description 20131358 Riviera TIS

East/West Street: Memorial Dr | North/South Street: Avery Rd

Intersection Orientation: North-South | Study Period (hrs): 0.25

Vehicle Volumes and Adjustments

Major Street	Northbound			Southbound		
Movement	1	2	3	4	5	6
	L	T	R	L	T	R
Volume (veh/h)		694	51	29	534	
Peak-Hour Factor, PHF	1.00	0.90	0.90	0.90	0.90	1.00
Hourly Flow Rate, HFR (veh/h)	0	771	56	32	593	0
Percent Heavy Vehicles	0	--	--	3	--	--
Median Type	Undivided					
RT Channelized			0			0
Lanes	0	1	0	0	1	0
Configuration			TR	LT		
Upstream Signal		0			0	

Minor Street	Eastbound			Westbound		
Movement	7	8	9	10	11	12
	L	T	R	L	T	R
Volume (veh/h)				38		39
Peak-Hour Factor, PHF	1.00	1.00	1.00	0.90	0.90	0.90
Hourly Flow Rate, HFR (veh/h)	0	0	0	42	0	43
Percent Heavy Vehicles	0	0	0	1	0	6
Percent Grade (%)		0			0	
Flared Approach		N			N	
Storage		0			0	
RT Channelized			0			0
Lanes	0	0	0	0	0	0
Configuration					LR	

Delay, Queue Length, and Level of Service

Approach	Northbound	Southbound	Westbound			Eastbound		
Movement	1	4	7	8	9	10	11	12
Lane Configuration		LT		LR				
v (veh/h)		32		85				
C (m) (veh/h)		800		203				
v/c		0.04		0.42				
95% queue length		0.12		1.91				
Control Delay (s/veh)		9.7		34.9				
LOS		A		D				
Approach Delay (s/veh)	--	--	34.9					
Approach LOS	--	--	D					

Copyright © 2007 University of Florida, All Rights Reserved HCS+TM Version 5.3 Generated: 10/15/2014 3:34 PM

AVERY ROAD / SITE DRIVE

TWO-WAY STOP CONTROL SUMMARY

General Information		Site Information	
Analyst	JMH	Intersection	Avery Rd/Site Dr
Agency/Co.	EMHT	Jurisdiction	Dublin
Date Performed	10/13/2014	Analysis Year	2014 Full Build - SCHOOL
Analysis Time Period	AM Peak		

Project Description	20131358 Riviera TIS
East/West Street: Site Drive	North/South Street: Avery Rd
Intersection Orientation: North-South	Study Period (hrs): 0.25

Vehicle Volumes and Adjustments

Major Street	Northbound			Southbound		
Movement	1	2	3	4	5	6
	L	T	R	L	T	R
Volume (veh/h)	44	177			218	46
Peak-Hour Factor, PHF	0.90	0.90	0.90	0.90	0.90	0.90
Hourly Flow Rate, HFR (veh/h)	48	196	0	0	242	51
Percent Heavy Vehicles	3	--	--	0	--	--
Median Type	Undivided					
RT Channelized			0			0
Lanes	1	1	0	0	1	0
Configuration	L	T				TR
Upstream Signal		0			0	

Minor Street	Eastbound			Westbound		
Movement	7	8	9	10	11	12
	L	T	R	L	T	R
Volume (veh/h)	68		71			
Peak-Hour Factor, PHF	0.90	1.00	0.90	0.90	1.00	0.90
Hourly Flow Rate, HFR (veh/h)	75	0	78	0	0	0
Percent Heavy Vehicles	1	0	1	1	0	1
Percent Grade (%)		0			0	
Flared Approach		N			N	
Storage		0			0	
RT Channelized			0			0
Lanes	0	0	0	0	0	0
Configuration		LR				

Delay, Queue Length, and Level of Service

Approach	Northbound	Southbound	Westbound			Eastbound		
Movement	1	4	7	8	9	10	11	12
Lane Configuration	L						LR	
v (veh/h)	48						153	
C (m) (veh/h)	1263						589	
v/c	0.04						0.26	
95% queue length	0.12						1.03	
Control Delay (s/veh)	8.0						13.2	
LOS	A						B	
Approach Delay (s/veh)	--	--				13.2		
Approach LOS	--	--				B		

Copyright © 2010 University of Florida, All Rights Reserved HCS+™ Version 5.6 Generated: 10/17/2014 12:02 PM

TWO-WAY STOP CONTROL SUMMARY

General Information

Analyst	JMH
Agency/Co.	EMHT
Date Performed	10/13/2014
Analysis Time Period	AM Peak

Site Information

Intersection	Avery Rd/Site Dr
Jurisdiction	Dublin
Analysis Year	2014 FB w/o HCSD - SCHOOL

Project Description 20131358 Riviera TIS

East/West Street: Site Drive | North/South Street: Avery Rd

Intersection Orientation: North-South | Study Period (hrs): 0.25

Vehicle Volumes and Adjustments

Major Street	Northbound			Southbound		
Movement	1	2	3	4	5	6
	L	T	R	L	T	R
Volume (veh/h)	54	177			218	58
Peak-Hour Factor, PHF	0.90	0.90	0.90	0.90	0.90	0.90
Hourly Flow Rate, HFR (veh/h)	60	196	0	0	242	64
Percent Heavy Vehicles	3	--	--	0	--	--
Median Type	Undivided					
RT Channelized			0			0
Lanes	1	1	0	0	1	0
Configuration	L	T				TR
Upstream Signal		0			0	

Minor Street	Eastbound			Westbound		
Movement	7	8	9	10	11	12
	L	T	R	L	T	R
Volume (veh/h)	80		90			
Peak-Hour Factor, PHF	0.90	1.00	0.90	0.90	1.00	0.90
Hourly Flow Rate, HFR (veh/h)	88	0	100	0	0	0
Percent Heavy Vehicles	1	0	1	1	0	1
Percent Grade (%)		0			0	
Flared Approach		N			N	
Storage		0			0	
RT Channelized			0			0
Lanes	0	0	0	0	0	0
Configuration		LR				

Delay, Queue Length, and Level of Service

Approach	Northbound	Southbound	Westbound			Eastbound		
Movement	1	4	7	8	9	10	11	12
Lane Configuration	L						LR	
v (veh/h)	60						188	
C (m) (veh/h)	1249						576	
v/c	0.05						0.33	
95% queue length	0.15						1.41	
Control Delay (s/veh)	8.0						14.2	
LOS	A						B	
Approach Delay (s/veh)	--	--	14.2					
Approach LOS	--	--	B					

Copyright © 2010 University of Florida, All Rights Reserved

HCS+™ Version 5.6 Generated: 10/17/2014 12:08 PM

TWO-WAY STOP CONTROL SUMMARY

General Information		Site Information	
Analyst	JMH	Intersection	Avery Rd/Site Dr
Agency/Co.	EMHT	Jurisdiction	Dublin
Date Performed	10/13/2014	Analysis Year	2024 Full Build - SCHOOL
Analysis Time Period	AM Peak		

Project Description 20131358 Riviera TIS

East/West Street: Site Drive | North/South Street: Avery Rd

Intersection Orientation: North-South | Study Period (hrs): 0.25

Vehicle Volumes and Adjustments

Major Street	Northbound			Southbound		
Movement	1	2	3	4	5	6
	L	T	R	L	T	R
Volume (veh/h)	44	366			421	46
Peak-Hour Factor, PHF	0.90	0.90	0.90	0.90	0.90	0.90
Hourly Flow Rate, HFR (veh/h)	48	406	0	0	467	51
Percent Heavy Vehicles	3	--	--	0	--	--
Median Type	Undivided					
RT Channelized			0			0
Lanes	1	1	0	0	1	0
Configuration	L	T				TR
Upstream Signal		0			0	

Minor Street	Eastbound			Westbound		
Movement	7	8	9	10	11	12
	L	T	R	L	T	R
Volume (veh/h)	68		71			
Peak-Hour Factor, PHF	0.90	1.00	0.90	0.90	1.00	0.90
Hourly Flow Rate, HFR (veh/h)	75	0	78	0	0	0
Percent Heavy Vehicles	1	0	1	1	0	1
Percent Grade (%)		0			0	
Flared Approach		N			N	
Storage		0			0	
RT Channelized			0			0
Lanes	0	0	0	0	0	0
Configuration		LR				

Delay, Queue Length, and Level of Service

Approach	Northbound	Southbound	Westbound			Eastbound		
Movement	1	4	7	8	9	10	11	12
Lane Configuration	L						LR	
v (veh/h)	48						153	
C (m) (veh/h)	1043						362	
v/c	0.05						0.42	
95% queue length	0.14						2.04	
Control Delay (s/veh)	8.6						22.0	
LOS	A						C	
Approach Delay (s/veh)	--	--				22.0		
Approach LOS	--	--				C		

Copyright © 2010 University of Florida, All Rights Reserved HCS+™ Version 5.6 Generated: 10/17/2014 12:05 PM

TWO-WAY STOP CONTROL SUMMARY

General Information

Analyst	JMH
Agency/Co.	EMHT
Date Performed	10/13/2014
Analysis Time Period	AM Peak

Site Information

Intersection	Avery Rd/Site Dr
Jurisdiction	Dublin
Analysis Year	2024 FB w/o HCSD - SCHOOL

Project Description 20131358 Riviera TIS

East/West Street: Site Drive | North/South Street: Avery Rd

Intersection Orientation: North-South | Study Period (hrs): 0.25

Vehicle Volumes and Adjustments

Major Street	Northbound			Southbound		
Movement	1	2	3	4	5	6
	L	T	R	L	T	R
Volume (veh/h)	54	366			421	58
Peak-Hour Factor, PHF	0.90	0.90	0.90	0.90	0.90	0.90
Hourly Flow Rate, HFR (veh/h)	60	406	0	0	467	64
Percent Heavy Vehicles	3	--	--	0	--	--
Median Type	Undivided					
RT Channelized			0			0
Lanes	1	1	0	0	1	0
Configuration	L	T				TR
Upstream Signal		0			0	

Minor Street	Eastbound			Westbound		
Movement	7	8	9	10	11	12
	L	T	R	L	T	R
Volume (veh/h)	80		90			
Peak-Hour Factor, PHF	0.90	1.00	0.90	0.90	1.00	0.90
Hourly Flow Rate, HFR (veh/h)	88	0	100	0	0	0
Percent Heavy Vehicles	1	0	1	1	0	1
Percent Grade (%)		0			0	
Flared Approach		N			N	
Storage		0			0	
RT Channelized			0			0
Lanes	0	0	0	0	0	0
Configuration		LR				

Delay, Queue Length, and Level of Service

Approach	Northbound	Southbound	Westbound			Eastbound		
Movement	1	4	7	8	9	10	11	12
Lane Configuration	L						LR	
v (veh/h)	60						188	
C (m) (veh/h)	1031						354	
v/c	0.06						0.53	
95% queue length	0.19						2.97	
Control Delay (s/veh)	8.7						26.1	
LOS	A						D	
Approach Delay (s/veh)	--	--	26.1					
Approach LOS	--	--	D					

Copyright © 2010 University of Florida, All Rights Reserved HCS+™ Version 5.6 Generated: 10/17/2014 12:10 PM

TWO-WAY STOP CONTROL SUMMARY

General Information

Analyst	JMH
Agency/Co.	EMHT
Date Performed	10/13/2014
Analysis Time Period	AM Peak

Site Information

Intersection	Avery Rd/Site Dr
Jurisdiction	Dublin
Analysis Year	2024 FB w/o HCSD - SCHOOL

Project Description 20131358 Riviera TIS

East/West Street: Site Drive | North/South Street: Avery Rd

Intersection Orientation: North-South | Study Period (hrs): 0.25

Vehicle Volumes and Adjustments

Major Street	Northbound			Southbound		
Movement	1	2	3	4	5	6
	L	T	R	L	T	R
Volume (veh/h)	54	366			421	58
Peak-Hour Factor, PHF	0.90	0.90	0.90	0.90	0.90	0.90
Hourly Flow Rate, HFR (veh/h)	60	406	0	0	467	64
Percent Heavy Vehicles	3	--	--	0	--	--
Median Type	Undivided					
RT Channelized			0			0
Lanes	1	1	0	0	1	1
Configuration	L	T			T	R
Upstream Signal		0			0	

Minor Street	Eastbound			Westbound		
Movement	7	8	9	10	11	12
	L	T	R	L	T	R
Volume (veh/h)	80		90			
Peak-Hour Factor, PHF	0.90	1.00	0.90	0.90	1.00	0.90
Hourly Flow Rate, HFR (veh/h)	88	0	100	0	0	0
Percent Heavy Vehicles	1	0	1	1	0	1
Percent Grade (%)		0			0	
Flared Approach		N			N	
Storage		0			0	
RT Channelized			0			0
Lanes	0	0	0	0	0	0
Configuration		LR				

Delay, Queue Length, and Level of Service

Approach	Northbound	Southbound	Westbound			Eastbound		
Movement	1	4	7	8	9	10	11	12
Lane Configuration	L						LR	
v (veh/h)	60						188	
C (m) (veh/h)	1031						369	
v/c	0.06						0.51	
95% queue length	0.19						2.78	
Control Delay (s/veh)	8.7						24.5	
LOS	A						C	
Approach Delay (s/veh)	--	--	24.5					
Approach LOS	--	--	C					

Copyright © 2010 University of Florida, All Rights Reserved HCS+™ Version 5.6 Generated: 10/17/2014 12:10 PM

TWO-WAY STOP CONTROL SUMMARY

General Information		Site Information	
Analyst	JMH	Intersection	Avery Rd/Site Dr
Agency/Co.	EMHT	Jurisdiction	Dublin
Date Performed	10/13/2014	Analysis Year	2014 Full Build - SCHOOL
Analysis Time Period	PM Peak		

Project Description 20131358 Riviera TIS

East/West Street: Site Drive | North/South Street: Avery Rd

Intersection Orientation: North-South | Study Period (hrs): 0.25

Vehicle Volumes and Adjustments

Major Street	Northbound			Southbound		
Movement	1	2	3	4	5	6
	L	T	R	L	T	R
Volume (veh/h)	61	384			294	53
Peak-Hour Factor, PHF	0.90	0.90	0.90	0.90	0.90	0.90
Hourly Flow Rate, HFR (veh/h)	67	426	0	0	326	58
Percent Heavy Vehicles	3	--	--	0	--	--
Median Type	Undivided					
RT Channelized			0			0
Lanes	1	1	0	0	1	0
Configuration	L	T				TR
Upstream Signal		0			0	

Minor Street	Eastbound			Westbound		
Movement	7	8	9	10	11	12
	L	T	R	L	T	R
Volume (veh/h)	35		40			
Peak-Hour Factor, PHF	0.90	1.00	0.90	0.90	1.00	0.90
Hourly Flow Rate, HFR (veh/h)	38	0	44	0	0	0
Percent Heavy Vehicles	1	0	1	1	0	1
Percent Grade (%)		0			0	
Flared Approach		N			N	
Storage		0			0	
RT Channelized			0			0
Lanes	0	0	0	0	0	0
Configuration		LR				

Delay, Queue Length, and Level of Service

Approach	Northbound	Southbound	Westbound			Eastbound		
Movement	1	4	7	8	9	10	11	12
Lane Configuration	L						LR	
v (veh/h)	67						82	
C (m) (veh/h)	1169						418	
v/c	0.06						0.20	
95% queue length	0.18						0.72	
Control Delay (s/veh)	8.3						15.7	
LOS	A						C	
Approach Delay (s/veh)	--	--				15.7		
Approach LOS	--	--				C		

Copyright © 2010 University of Florida, All Rights Reserved HCS+™ Version 5.6 Generated: 10/17/2014 12:03 PM

TWO-WAY STOP CONTROL SUMMARY

General Information

Analyst	JMH
Agency/Co.	EMHT
Date Performed	10/13/2014
Analysis Time Period	PM Peak

Site Information

Intersection	Avery Rd/Site Dr
Jurisdiction	Dublin
Analysis Year	2014 FB w/o HCSD - SCHOOL

Project Description 20131358 Riviera TIS

East/West Street: Site Drive | North/South Street: Avery Rd

Intersection Orientation: North-South | Study Period (hrs): 0.25

Vehicle Volumes and Adjustments

Major Street	Northbound			Southbound		
Movement	1	2	3	4	5	6
	L	T	R	L	T	R
Volume (veh/h)	80	384			294	60
Peak-Hour Factor, PHF	0.90	0.90	0.90	0.90	0.90	0.90
Hourly Flow Rate, HFR (veh/h)	88	426	0	0	326	66
Percent Heavy Vehicles	3	--	--	0	--	--
Median Type	Undivided					
RT Channelized			0			0
Lanes	1	1	0	0	1	0
Configuration	L	T				TR
Upstream Signal		0			0	

Minor Street	Eastbound			Westbound		
Movement	7	8	9	10	11	12
	L	T	R	L	T	R
Volume (veh/h)	40		37			
Peak-Hour Factor, PHF	0.90	1.00	0.90	0.90	1.00	0.90
Hourly Flow Rate, HFR (veh/h)	44	0	41	0	0	0
Percent Heavy Vehicles	1	0	1	1	0	1
Percent Grade (%)		0			0	
Flared Approach		N			N	
Storage		0			0	
RT Channelized			0			0
Lanes	0	0	0	0	0	0
Configuration		LR				

Delay, Queue Length, and Level of Service

Approach	Northbound	Southbound	Westbound			Eastbound		
Movement	1	4	7	8	9	10	11	12
Lane Configuration	L						LR	
v (veh/h)	88						85	
C (m) (veh/h)	1161						376	
v/c	0.08						0.23	
95% queue length	0.25						0.86	
Control Delay (s/veh)	8.4						17.3	
LOS	A						C	
Approach Delay (s/veh)	--	--	17.3					
Approach LOS	--	--	C					

Copyright © 2010 University of Florida, All Rights Reserved HCS+™ Version 5.6 Generated: 10/17/2014 12:09 PM

TWO-WAY STOP CONTROL SUMMARY

General Information		Site Information	
Analyst	JMH	Intersection	Avery Rd/Site Dr
Agency/Co.	EMHT	Jurisdiction	Dublin
Date Performed	10/13/2014	Analysis Year	2024 Full Build - SCHOOL
Analysis Time Period	PM Peak		

Project Description 20131358 Riviera TIS

East/West Street: Site Drive | North/South Street: Avery Rd

Intersection Orientation: North-South | Study Period (hrs): 0.25

Vehicle Volumes and Adjustments

Major Street	Northbound			Southbound		
Movement	1	2	3	4	5	6
	L	T	R	L	T	R
Volume (veh/h)	61	653			526	53
Peak-Hour Factor, PHF	0.90	0.90	0.90	0.90	0.90	0.90
Hourly Flow Rate, HFR (veh/h)	67	725	0	0	584	58
Percent Heavy Vehicles	3	--	--	0	--	--
Median Type	Undivided					
RT Channelized			0			0
Lanes	1	1	0	0	1	0
Configuration	L	T				TR
Upstream Signal		0			0	

Minor Street	Eastbound			Westbound		
Movement	7	8	9	10	11	12
	L	T	R	L	T	R
Volume (veh/h)	35		40			
Peak-Hour Factor, PHF	0.90	1.00	0.90	0.90	1.00	0.90
Hourly Flow Rate, HFR (veh/h)	38	0	44	0	0	0
Percent Heavy Vehicles	1	0	1	1	0	1
Percent Grade (%)		0			0	
Flared Approach		N			N	
Storage		0			0	
RT Channelized			0			0
Lanes	0	0	0	0	0	0
Configuration		LR				

Delay, Queue Length, and Level of Service

Approach	Northbound	Southbound	Westbound			Eastbound		
Movement	1	4	7	8	9	10	11	12
Lane Configuration	L						LR	
v (veh/h)	67						82	
C (m) (veh/h)	938						216	
v/c	0.07						0.38	
95% queue length	0.23						1.67	
Control Delay (s/veh)	9.1						31.5	
LOS	A						D	
Approach Delay (s/veh)	--	--	31.5					
Approach LOS	--	--	D					

Copyright © 2010 University of Florida, All Rights Reserved HCS+™ Version 5.6 Generated: 10/17/2014 12:05 PM

TWO-WAY STOP CONTROL SUMMARY

General Information

Analyst	JMH
Agency/Co.	EMHT
Date Performed	10/13/2014
Analysis Time Period	PM Peak

Site Information

Intersection	Avery Rd/Site Dr
Jurisdiction	Dublin
Analysis Year	2024 FB w/o HCSD - SCHOOL

Project Description 20131358 Riviera TIS

East/West Street: Site Drive | North/South Street: Avery Rd

Intersection Orientation: North-South | Study Period (hrs): 0.25

Vehicle Volumes and Adjustments

Major Street	Northbound			Southbound		
Movement	1	2	3	4	5	6
	L	T	R	L	T	R
Volume (veh/h)	80	653			526	60
Peak-Hour Factor, PHF	0.90	0.90	0.90	0.90	0.90	0.90
Hourly Flow Rate, HFR (veh/h)	88	725	0	0	584	66
Percent Heavy Vehicles	3	--	--	0	--	--
Median Type	Undivided					
RT Channelized			0			0
Lanes	1	1	0	0	1	0
Configuration	L	T				TR
Upstream Signal		0			0	

Minor Street	Eastbound			Westbound		
Movement	7	8	9	10	11	12
	L	T	R	L	T	R
Volume (veh/h)	40		37			
Peak-Hour Factor, PHF	0.90	1.00	0.90	0.90	1.00	0.90
Hourly Flow Rate, HFR (veh/h)	44	0	41	0	0	0
Percent Heavy Vehicles	1	0	1	1	0	1
Percent Grade (%)		0			0	
Flared Approach		N			N	
Storage		0			0	
RT Channelized			0			0
Lanes	0	0	0	0	0	0
Configuration		LR				

Delay, Queue Length, and Level of Service

Approach	Northbound	Southbound	Westbound			Eastbound		
Movement	1	4	7	8	9	10	11	12
Lane Configuration	L						LR	
v (veh/h)	88						85	
C (m) (veh/h)	931						189	
v/c	0.09						0.45	
95% queue length	0.31						2.11	
Control Delay (s/veh)	9.3						38.7	
LOS	A						E	
Approach Delay (s/veh)	--	--	38.7					
Approach LOS	--	--	E					

Copyright © 2010 University of Florida, All Rights Reserved HCS+™ Version 5.6 Generated: 10/17/2014 12:13 PM

TWO-WAY STOP CONTROL SUMMARY

General Information

Analyst	JMH
Agency/Co.	EMHT
Date Performed	10/13/2014
Analysis Time Period	PM Peak

Site Information

Intersection	Avery Rd/Site Dr
Jurisdiction	Dublin
Analysis Year	2024 FB w/o HCSD - SCHOOL

Project Description 20131358 Riviera TIS

East/West Street: Site Drive | North/South Street: Avery Rd

Intersection Orientation: North-South | Study Period (hrs): 0.25

Vehicle Volumes and Adjustments

Major Street	Northbound			Southbound		
Movement	1	2	3	4	5	6
	L	T	R	L	T	R
Volume (veh/h)	80	653			526	60
Peak-Hour Factor, PHF	0.90	0.90	0.90	0.90	0.90	0.90
Hourly Flow Rate, HFR (veh/h)	88	725	0	0	584	66
Percent Heavy Vehicles	3	--	--	0	--	--
Median Type	Undivided					
RT Channelized			0			0
Lanes	1	1	0	0	1	1
Configuration	L	T			T	R
Upstream Signal		0			0	

Minor Street	Eastbound			Westbound		
Movement	7	8	9	10	11	12
	L	T	R	L	T	R
Volume (veh/h)	40		37			
Peak-Hour Factor, PHF	0.90	1.00	0.90	0.90	1.00	0.90
Hourly Flow Rate, HFR (veh/h)	44	0	41	0	0	0
Percent Heavy Vehicles	1	0	1	1	0	1
Percent Grade (%)		0			0	
Flared Approach		N			N	
Storage		0			0	
RT Channelized			0			0
Lanes	0	0	0	0	0	0
Configuration		LR				

Delay, Queue Length, and Level of Service

Approach	Northbound	Southbound	Westbound			Eastbound		
Movement	1	4	7	8	9	10	11	12
Lane Configuration	L						LR	
v (veh/h)	88						85	
C (m) (veh/h)	931						197	
v/c	0.09						0.43	
95% queue length	0.31						1.99	
Control Delay (s/veh)	9.3						36.5	
LOS	A						E	
Approach Delay (s/veh)	--	--				36.5		
Approach LOS	--	--				E		

Copyright © 2010 University of Florida, All Rights Reserved HCS+™ Version 5.6 Generated: 10/17/2014 12:11 PM

AVERY ROAD / GLICK ROAD / MANLEY ROAD

MOVEMENT SUMMARY

Site: 2014 AM Full Build w/ HCSD

Roundabout with 1-lane approaches and circulating road

Roundabout

Movement Performance - Vehicles

Mov ID	Turn	Demand Flow veh/h	HV %	Deg. Satn v/c	Average Delay sec	Level of Service	95% Back of Queue Vehicles veh	95% Back of Queue Distance ft	Prop. Queued	Effective Stop Rate per veh	Average Speed mph
South: Avery Rd											
3L	L	7	0.0	0.232	14.6	LOS B	1.1	29.0	0.36	0.81	31.6
8T	T	78	3.7	0.232	8.3	LOS A	1.1	29.0	0.36	0.55	34.5
8R	R	143	5.4	0.232	9.5	LOS A	1.1	29.0	0.36	0.63	34.1
Approach		228	4.7	0.232	9.2	LOS A	1.1	29.0	0.36	0.61	34.2
East: Glick Rd											
1L	L	254	3.0	0.378	11.0	LOS B	2.2	54.9	0.29	0.69	27.2
6T	T	4	8.1	0.378	5.6	LOS A	2.2	54.9	0.29	0.42	30.2
6R	R	188	1.4	0.378	6.0	LOS A	2.2	54.9	0.29	0.48	29.4
Approach		447	2.4	0.378	8.8	LOS A	2.2	54.9	0.29	0.60	28.1
North: Manley Rd											
7L	L	151	2.3	0.350	14.6	LOS B	1.8	46.8	0.48	0.82	30.8
4T	T	173	3.2	0.350	9.0	LOS A	1.8	46.8	0.48	0.63	33.8
4R	R	1	4.8	0.350	10.0	LOS A	1.8	46.8	0.48	0.68	33.5
Approach		326	2.8	0.350	11.6	LOS B	1.8	46.8	0.48	0.72	32.3
West: Glick Rd											
5L	L	6	0.0	0.060	16.8	LOS B	0.3	7.0	0.56	0.83	30.3
2T	T	16	6.1	0.060	10.6	LOS B	0.3	7.0	0.56	0.67	33.3
2R	R	21	3.5	0.060	11.6	LOS B	0.3	7.0	0.56	0.72	33.1
Approach		42	4.0	0.060	11.9	LOS B	0.3	7.0	0.56	0.71	32.8
All Vehicles		1042	3.1	0.378	9.9	LOS A	2.2	54.9	0.37	0.64	30.8

Level of Service (LOS) Method: Delay & v/c (HCM 2010).
Roundabout LOS Method: Same as Signalised Intersections.
Vehicle movement LOS values are based on average delay and v/c ratio (degree of saturation) per movement
LOS F will result if v/c > 1 irrespective of movement delay value (does not apply for approaches and intersection).
Intersection and Approach LOS values are based on average delay for all movements (v/c not used as specified in HCM 2010).
Roundabout Capacity Model: SIDRA Standard.
SIDRA Standard Delay Model used.

Copyright © 2000-2011 Akcelik and Associates Pty Ltd
www.sidrasolutions.com

SIDRA INTERSECTION

MOVEMENT SUMMARY

Site: 2014 AM Full Build w/o HCSD

Roundabout with 1-lane approaches and circulating road

Roundabout

Movement Performance - Vehicles

Mov ID	Turn	Demand Flow veh/h	HV %	Deg. Satn v/c	Average Delay sec	Level of Service	95% Back of Queue Vehicles veh	95% Back of Queue Distance ft	Prop. Queued	Effective Stop Rate per veh	Average Speed mph
South: Avery Rd											
3L	L	7	0.0	0.244	14.6	LOS B	1.2	30.9	0.36	0.81	31.6
8T	T	90	3.7	0.244	8.3	LOS A	1.2	30.9	0.36	0.56	34.5
8R	R	144	5.4	0.244	9.5	LOS A	1.2	30.9	0.36	0.63	34.1
Approach		241	4.6	0.244	9.2	LOS A	1.2	30.9	0.36	0.61	34.2
East: Glick Rd											
1L	L	259	3.0	0.387	11.0	LOS B	2.2	56.6	0.31	0.69	27.2
6T	T	4	8.1	0.387	5.7	LOS A	2.2	56.6	0.31	0.43	30.0
6R	R	184	1.4	0.387	6.0	LOS A	2.2	56.6	0.31	0.49	29.3
Approach		448	2.4	0.387	8.9	LOS A	2.2	56.6	0.31	0.61	28.0
North: Manley Rd											
7L	L	149	2.3	0.359	14.6	LOS B	1.9	48.7	0.49	0.83	30.8
4T	T	182	3.2	0.359	9.0	LOS A	1.9	48.7	0.49	0.63	33.7
4R	R	1	4.8	0.359	10.0	LOS B	1.9	48.7	0.49	0.68	33.5
Approach		332	2.8	0.359	11.5	LOS B	1.9	48.7	0.49	0.72	32.3
West: Glick Rd											
5L	L	6	0.0	0.061	16.9	LOS B	0.3	7.1	0.57	0.84	30.3
2T	T	16	6.1	0.061	10.7	LOS B	0.3	7.1	0.57	0.68	33.3
2R	R	21	3.5	0.061	11.7	LOS B	0.3	7.1	0.57	0.72	33.0
Approach		42	4.0	0.061	12.0	LOS B	0.3	7.1	0.57	0.72	32.7
All Vehicles		1063	3.1	0.387	9.9	LOS A	2.2	56.6	0.39	0.65	30.8

Level of Service (LOS) Method: Delay & v/c (HCM 2010).
Roundabout LOS Method: Same as Signalised Intersections.
Vehicle movement LOS values are based on average delay and v/c ratio (degree of saturation) per movement
LOS F will result if v/c > 1 irrespective of movement delay value (does not apply for approaches and intersection).
Intersection and Approach LOS values are based on average delay for all movements (v/c not used as specified in HCM 2010).
Roundabout Capacity Model: SIDRA Standard.
SIDRA Standard Delay Model used.

Copyright © 2000-2011 Akcelik and Associates Pty Ltd
www.sidrasolutions.com

MOVEMENT SUMMARY

Site: 2024 AM Full Build w/ HCSD

Roundabout with 1-lane approaches and circulating road

Roundabout

Movement Performance - Vehicles

Mov ID	Turn	Demand Flow veh/h	HV %	Deg. Satn v/c	Average Delay sec	Level of Service	95% Back of Queue Vehicles veh	95% Back of Queue Distance ft	Prop. Queued	Effective Stop Rate per veh	Average Speed mph
South: Avery Rd											
3L	L	7	0.0	0.508	16.5	LOS B	3.5	91.5	0.67	0.88	30.7
8T	T	214	3.7	0.508	10.2	LOS B	3.5	91.5	0.67	0.75	32.9
8R	R	196	5.4	0.508	11.4	LOS B	3.5	91.5	0.67	0.80	32.9
Approach		417	4.4	0.508	10.8	LOS B	3.5	91.5	0.67	0.78	32.9
East: Glick Rd											
1L	L	368	3.0	0.735	14.1	LOS B	8.3	210.4	0.76	0.82	26.0
6T	T	4	8.1	0.735	8.7	LOS A	8.3	210.4	0.76	0.74	27.9
6R	R	366	1.4	0.735	9.1	LOS A	8.3	210.4	0.76	0.75	27.6
Approach		738	2.2	0.735	11.6	LOS B	8.3	210.4	0.76	0.79	26.8
North: Manley Rd											
7L	L	316	2.3	0.808	21.3	LOS C	10.8	277.1	0.94	1.05	27.2
4T	T	357	3.2	0.808	15.7	LOS B	10.8	277.1	0.94	1.03	29.6
4R	R	1	4.8	0.808	16.7	LOS B	10.8	277.1	0.94	1.03	29.5
Approach		673	2.8	0.808	18.3	LOS B	10.8	277.1	0.94	1.04	28.4
West: Glick Rd											
5L	L	6	0.0	0.115	22.8	LOS C	0.7	17.2	0.85	0.93	27.3
2T	T	16	6.1	0.115	16.6	LOS B	0.7	17.2	0.85	0.88	29.3
2R	R	21	3.5	0.115	17.6	LOS B	0.7	17.2	0.85	0.89	29.1
Approach		42	4.0	0.115	17.9	LOS B	0.7	17.2	0.85	0.89	28.9
All Vehicles		1870	3.0	0.808	14.0	LOS B	10.8	277.1	0.80	0.88	28.7

Level of Service (LOS) Method: Delay & v/c (HCM 2010).
Roundabout LOS Method: Same as Signalised Intersections.
Vehicle movement LOS values are based on average delay and v/c ratio (degree of saturation) per movement
LOS F will result if v/c > 1 irrespective of movement delay value (does not apply for approaches and intersection).
Intersection and Approach LOS values are based on average delay for all movements (v/c not used as specified in HCM 2010).
Roundabout Capacity Model: SIDRA Standard.
SIDRA Standard Delay Model used.

Copyright © 2000-2011 Akcelik and Associates Pty Ltd
www.sidrasolutions.com

SIDRA INTERSECTION

MOVEMENT SUMMARY

Site: 2024 AM Full Build w/o HCSD

Roundabout with 1-lane approaches and circulating road

Roundabout

Movement Performance - Vehicles											
Mov ID	Turn	Demand Flow veh/h	HV %	Deg. Satn v/c	Average Delay sec	Level of Service	95% Back of Queue Vehicles veh	95% Back of Queue Distance ft	Prop. Queued	Effective Stop Rate per veh	Average Speed mph
South: Avery Rd											
3L	L	7	0.0	0.522	16.6	LOS B	3.8	97.1	0.68	0.89	30.7
8T	T	227	3.7	0.522	10.3	LOS B	3.8	97.1	0.68	0.76	32.9
8R	R	197	5.4	0.522	11.5	LOS B	3.8	97.1	0.68	0.80	32.9
Approach		430	4.4	0.522	10.9	LOS B	3.8	97.1	0.68	0.78	32.8
East: Glick Rd											
1L	L	372	3.0	0.747	14.6	LOS B	8.7	222.3	0.78	0.85	25.8
6T	T	4	8.1	0.747	9.2	LOS A	8.7	222.3	0.78	0.77	27.8
6R	R	362	1.4	0.747	9.6	LOS A	8.7	222.3	0.78	0.78	27.5
Approach		739	2.2	0.747	12.1	LOS B	8.7	222.3	0.78	0.81	26.6
North: Manley Rd											
7L	L	313	2.3	0.821	21.9	LOS C	11.5	293.4	0.96	1.07	26.9
4T	T	366	3.2	0.821	16.3	LOS B	11.5	293.4	0.96	1.05	29.3
4R	R	1	4.8	0.821	17.3	LOS B	11.5	293.4	0.96	1.05	29.1
Approach		680	2.8	0.821	18.9	LOS B	11.5	293.4	0.96	1.06	28.1
West: Glick Rd											
5L	L	6	0.0	0.118	23.0	LOS C	0.7	17.7	0.86	0.93	27.1
2T	T	16	6.1	0.118	16.8	LOS B	0.7	17.7	0.86	0.89	29.2
2R	R	21	3.5	0.118	17.8	LOS B	0.7	17.7	0.86	0.90	29.0
Approach		42	4.0	0.118	18.2	LOS B	0.7	17.7	0.86	0.90	28.8
All Vehicles		1891	3.0	0.821	14.4	LOS B	11.5	293.4	0.82	0.90	28.5

Level of Service (LOS) Method: Delay & v/c (HCM 2010).
Roundabout LOS Method: Same as Signalised Intersections.
Vehicle movement LOS values are based on average delay and v/c ratio (degree of saturation) per movement
LOS F will result if v/c > 1 irrespective of movement delay value (does not apply for approaches and intersection).
Intersection and Approach LOS values are based on average delay for all movements (v/c not used as specified in HCM 2010).
Roundabout Capacity Model: SIDRA Standard.
SIDRA Standard Delay Model used.

Copyright © 2000-2011 Akcelik and Associates Pty Ltd
www.sidrasolutions.com

MOVEMENT SUMMARY

Site: 2014 PM Full Build w/ HCSD

Roundabout with 1-lane approaches and circulating road

Roundabout

Movement Performance - Vehicles

Mov ID	Turn	Demand Flow veh/h	HV %	Deg. Satn v/c	Average Delay sec	Level of Service	95% Back of Queue Vehicles veh	95% Back of Queue Distance ft	Prop. Queued	Effective Stop Rate per veh	Average Speed mph
South: Avery Rd											
3L	L	13	0.0	0.335	14.8	LOS B	1.8	46.4	0.42	0.81	31.5
8T	T	126	3.7	0.335	8.5	LOS A	1.8	46.4	0.42	0.58	34.2
8R	R	191	5.4	0.335	9.7	LOS A	1.8	46.4	0.42	0.65	33.9
Approach		330	4.5	0.335	9.5	LOS A	1.8	46.4	0.42	0.63	33.9
East: Glick Rd											
1L	L	213	3.0	0.364	11.3	LOS B	2.0	51.7	0.37	0.71	27.1
6T	T	18	8.1	0.364	5.9	LOS A	2.0	51.7	0.37	0.47	29.8
6R	R	160	1.4	0.364	6.3	LOS A	2.0	51.7	0.37	0.53	29.1
Approach		391	2.6	0.364	9.0	LOS A	2.0	51.7	0.37	0.63	28.0
North: Manley Rd											
7L	L	173	2.3	0.387	14.5	LOS B	2.1	54.6	0.48	0.81	30.8
4T	T	183	3.2	0.387	8.9	LOS A	2.1	54.6	0.48	0.62	33.7
4R	R	12	4.8	0.387	10.1	LOS B	2.1	54.6	0.48	0.68	33.5
Approach		369	2.8	0.387	11.6	LOS B	2.1	54.6	0.48	0.71	32.3
West: Glick Rd											
5L	L	3	0.0	0.043	16.7	LOS B	0.2	4.9	0.56	0.82	30.4
2T	T	13	6.1	0.043	10.5	LOS B	0.2	4.9	0.56	0.65	33.4
2R	R	13	3.5	0.043	11.5	LOS B	0.2	4.9	0.56	0.70	33.2
Approach		30	4.3	0.043	11.6	LOS B	0.2	4.9	0.56	0.69	33.0
All Vehicles		1120	3.3	0.387	10.1	LOS B	2.1	54.6	0.42	0.66	31.1

Level of Service (LOS) Method: Delay & v/c (HCM 2010).
Roundabout LOS Method: Same as Signalised Intersections.
Vehicle movement LOS values are based on average delay and v/c ratio (degree of saturation) per movement
LOS F will result if v/c > 1 irrespective of movement delay value (does not apply for approaches and intersection).
Intersection and Approach LOS values are based on average delay for all movements (v/c not used as specified in HCM 2010).
Roundabout Capacity Model: SIDRA Standard.
SIDRA Standard Delay Model used.

Copyright © 2000-2011 Akcelik and Associates Pty Ltd
www.sidrasolutions.com

SIDRA INTERSECTION

MOVEMENT SUMMARY

Site: 2014 PM Full Build w/o HCSD

Roundabout with 1-lane approaches and circulating road

Roundabout

Movement Performance - Vehicles

Mov ID	Turn	Demand Flow veh/h	HV %	Deg. Satn v/c	Average Delay sec	Level of Service	95% Back of Queue Vehicles veh	95% Back of Queue Distance ft	Prop. Queued	Effective Stop Rate per veh	Average Speed mph
South: Avery Rd											
3L	L	13	0.0	0.338	14.8	LOS B	1.8	47.1	0.42	0.81	31.5
8T	T	129	3.7	0.338	8.5	LOS A	1.8	47.1	0.42	0.58	34.2
8R	R	192	5.4	0.338	9.7	LOS A	1.8	47.1	0.42	0.65	33.9
Approach		334	4.5	0.338	9.4	LOS A	1.8	47.1	0.42	0.63	33.9
East: Glick Rd											
1L	L	214	3.0	0.365	11.3	LOS B	2.0	52.0	0.37	0.71	27.1
6T	T	18	8.1	0.365	5.9	LOS A	2.0	52.0	0.37	0.47	29.7
6R	R	159	1.4	0.365	6.3	LOS A	2.0	52.0	0.37	0.53	29.0
Approach		391	2.6	0.365	9.1	LOS A	2.0	52.0	0.37	0.63	28.0
North: Manley Rd											
7L	L	172	2.3	0.393	14.5	LOS B	2.2	55.8	0.49	0.81	30.8
4T	T	190	3.2	0.393	8.9	LOS A	2.2	55.8	0.49	0.62	33.7
4R	R	12	4.8	0.393	10.1	LOS B	2.2	55.8	0.49	0.68	33.5
Approach		374	2.8	0.393	11.5	LOS B	2.2	55.8	0.49	0.71	32.3
West: Glick Rd											
5L	L	3	0.0	0.043	16.8	LOS B	0.2	5.0	0.56	0.82	30.4
2T	T	13	6.1	0.043	10.5	LOS B	0.2	5.0	0.56	0.66	33.4
2R	R	13	3.5	0.043	11.6	LOS B	0.2	5.0	0.56	0.70	33.2
Approach		30	4.3	0.043	11.7	LOS B	0.2	5.0	0.56	0.70	32.9
All Vehicles		1130	3.3	0.393	10.1	LOS B	2.2	55.8	0.43	0.66	31.1

Level of Service (LOS) Method: Delay & v/c (HCM 2010).
Roundabout LOS Method: Same as Signalised Intersections.
Vehicle movement LOS values are based on average delay and v/c ratio (degree of saturation) per movement
LOS F will result if v/c > 1 irrespective of movement delay value (does not apply for approaches and intersection).
Intersection and Approach LOS values are based on average delay for all movements (v/c not used as specified in HCM 2010).
Roundabout Capacity Model: SIDRA Standard.
SIDRA Standard Delay Model used.

Copyright © 2000-2011 Akcelik and Associates Pty Ltd
www.sidrasolutions.com

MOVEMENT SUMMARY

Site: 2024 PM Full Build w/ HCSD

Roundabout with 1-lane approaches and circulating road

Roundabout

Movement Performance - Vehicles

Mov ID	Turn	Demand Flow veh/h	HV %	Deg. Satn v/c	Average Delay sec	Level of Service	95% Back of Queue Vehicles veh	95% Back of Queue Distance ft	Prop. Queued	Effective Stop Rate per veh	Average Speed mph
South: Avery Rd											
3L	L	13	0.0	0.739	20.3	LOS C	8.3	214.1	0.88	1.00	28.7
8T	T	302	3.7	0.739	14.0	LOS B	8.3	214.1	0.88	0.96	31.0
8R	R	269	5.4	0.739	15.2	LOS B	8.3	214.1	0.88	0.98	30.8
Approach		584	4.4	0.739	14.7	LOS B	8.3	214.1	0.88	0.97	30.9
East: Glick Rd											
1L	L	293	3.0	0.753	16.2	LOS B	8.9	227.1	0.86	0.96	25.1
6T	T	18	8.1	0.753	10.8	LOS B	8.9	227.1	0.86	0.91	27.2
6R	R	349	1.4	0.753	11.2	LOS B	8.9	227.1	0.86	0.91	26.7
Approach		660	2.3	0.753	13.4	LOS B	8.9	227.1	0.86	0.93	25.9
North: Manley Rd											
7L	L	366	2.3	0.850	21.7	LOS C	13.4	342.8	0.99	1.03	27.0
4T	T	378	3.2	0.850	16.1	LOS B	13.4	342.8	0.99	1.02	29.3
4R	R	12	4.8	0.850	17.3	LOS B	13.4	342.8	0.99	1.03	29.2
Approach		756	2.8	0.850	18.8	LOS B	13.4	342.8	0.99	1.03	28.1
West: Glick Rd											
5L	L	3	0.0	0.087	22.6	LOS C	0.5	13.0	0.86	0.91	27.4
2T	T	13	6.1	0.087	16.3	LOS B	0.5	13.0	0.86	0.86	29.5
2R	R	13	3.5	0.087	17.4	LOS B	0.5	13.0	0.86	0.87	29.3
Approach		30	4.3	0.087	17.5	LOS B	0.5	13.0	0.86	0.87	29.2
All Vehicles		2030	3.1	0.850	15.9	LOS B	13.4	342.8	0.91	0.98	28.1

Level of Service (LOS) Method: Delay & v/c (HCM 2010).
Roundabout LOS Method: Same as Signalised Intersections.
Vehicle movement LOS values are based on average delay and v/c ratio (degree of saturation) per movement
LOS F will result if v/c > 1 irrespective of movement delay value (does not apply for approaches and intersection).
Intersection and Approach LOS values are based on average delay for all movements (v/c not used as specified in HCM 2010).
Roundabout Capacity Model: SIDRA Standard.
SIDRA Standard Delay Model used.

Copyright © 2000-2011 Akcelik and Associates Pty Ltd
www.sidrasolutions.com

SIDRA INTERSECTION

MOVEMENT SUMMARY

Site: 2024 PM Full Build w/o HCSD

Roundabout with 1-lane approaches and circulating road

Roundabout

Movement Performance - Vehicles											
Mov ID	Turn	Demand Flow veh/h	HV %	Deg. Satn v/c	Average Delay sec	Level of Service	95% Back of Queue Vehicles veh	95% Back of Queue Distance ft	Prop. Queued	Effective Stop Rate per veh	Average Speed mph
South: Avery Rd											
3L	L	13	0.0	0.744	20.4	LOS C	8.4	218.3	0.89	1.00	28.6
8T	T	306	3.7	0.744	14.1	LOS B	8.4	218.3	0.89	0.97	31.0
8R	R	270	5.4	0.744	15.3	LOS B	8.4	218.3	0.89	0.98	30.8
Approach		589	4.4	0.744	14.8	LOS B	8.4	218.3	0.89	0.98	30.8
East: Glick Rd											
1L	L	294	3.0	0.756	16.4	LOS B	9.0	230.1	0.87	0.96	25.0
6T	T	18	8.1	0.756	11.0	LOS B	9.0	230.1	0.87	0.92	27.2
6R	R	348	1.4	0.756	11.4	LOS B	9.0	230.1	0.87	0.92	26.6
Approach		660	2.3	0.756	13.6	LOS B	9.0	230.1	0.87	0.94	25.9
North: Manley Rd											
7L	L	364	2.3	0.857	22.1	LOS C	13.9	354.6	1.00	1.04	26.8
4T	T	384	3.2	0.857	16.5	LOS B	13.9	354.6	1.00	1.04	29.1
4R	R	12	4.8	0.857	17.7	LOS B	13.9	354.6	1.00	1.04	29.0
Approach		761	2.8	0.857	19.2	LOS B	13.9	354.6	1.00	1.04	27.9
West: Glick Rd											
5L	L	3	0.0	0.088	22.7	LOS C	0.5	13.3	0.86	0.91	27.3
2T	T	13	6.1	0.088	16.5	LOS B	0.5	13.3	0.86	0.87	29.4
2R	R	13	3.5	0.088	17.5	LOS B	0.5	13.3	0.86	0.88	29.2
Approach		30	4.3	0.088	17.6	LOS B	0.5	13.3	0.86	0.88	29.1
All Vehicles		2040	3.1	0.857	16.1	LOS B	13.9	354.6	0.92	0.99	28.0

Level of Service (LOS) Method: Delay & v/c (HCM 2010).
Roundabout LOS Method: Same as Signalised Intersections.
Vehicle movement LOS values are based on average delay and v/c ratio (degree of saturation) per movement
LOS F will result if v/c > 1 irrespective of movement delay value (does not apply for approaches and intersection).
Intersection and Approach LOS values are based on average delay for all movements (v/c not used as specified in HCM 2010).
Roundabout Capacity Model: SIDRA Standard.
SIDRA Standard Delay Model used.

Copyright © 2000-2011 Akcelik and Associates Pty Ltd
www.sidrasolutions.com

SIDRA INTERSECTION

JEROME ROAD / McKITRICK ROAD

12

TWO-WAY STOP CONTROL SUMMARY

General Information		Site Information	
Analyst	JMH	Intersection	Jerome/McKitrick
Agency/Co.	EMHT	Jurisdiction	Dublin
Date Performed	10/13/2014	Analysis Year	2014 Full Build - SCHOOL
Analysis Time Period	AM Peak		

Project Description 20131358

East/West Street: McKitrick Rd | North/South Street: Jerome Rd

Intersection Orientation: North-South | Study Period (hrs): 0.25

Vehicle Volumes and Adjustments

Major Street	Northbound			Southbound		
Movement	1	2	3	4	5	6
	L	T	R	L	T	R
Volume (veh/h)	44	116			168	101
Peak-Hour Factor, PHF	0.90	0.90	1.00	1.00	0.90	0.90
Hourly Flow Rate, HFR (veh/h)	48	128	0	0	186	112
Percent Heavy Vehicles	0	--	--	0	--	--
Median Type	Undivided					
RT Channelized			0			0
Lanes	0	1	0	0	1	0
Configuration	LT					TR
Upstream Signal		0			0	

Minor Street	Eastbound			Westbound		
Movement	7	8	9	10	11	12
	L	T	R	L	T	R
Volume (veh/h)	42		29			
Peak-Hour Factor, PHF	0.90	0.90	0.90	1.00	1.00	1.00
Hourly Flow Rate, HFR (veh/h)	46	0	32	0	0	0
Percent Heavy Vehicles	2	0	0	0	0	0
Percent Grade (%)		0			0	
Flared Approach		N			N	
Storage		0			0	
RT Channelized			0			0
Lanes	0	0	0	0	0	0
Configuration		LR				

Delay, Queue Length, and Level of Service

Approach	Northbound	Southbound	Westbound			Eastbound		
Movement	1	4	7	8	9	10	11	12
Lane Configuration	LT						LR	
v (veh/h)	48						78	
C (m) (veh/h)	1275						619	
v/c	0.04						0.13	
95% queue length	0.12						0.43	
Control Delay (s/veh)	7.9						11.7	
LOS	A						B	
Approach Delay (s/veh)	--	--	11.7					
Approach LOS	--	--	B					

Copyright © 2007 University of Florida, All Rights Reserved

HCS+™ Version 5.3

Generated: 10/15/2014 2:14 PM

12

TWO-WAY STOP CONTROL SUMMARY

General Information

Analyst	JMH
Agency/Co.	EMHT
Date Performed	10/13/2014
Analysis Time Period	AM Peak

Site Information

Intersection	Jerome/McKitrick
Jurisdiction	Dublin
Analysis Year	2014 FB w/o HCSD - SCHOOL

Project Description 20131358

East/West Street: McKitrick Rd | North/South Street: Jerome Rd

Intersection Orientation: North-South | Study Period (hrs): 0.25

Vehicle Volumes and Adjustments

Major Street	Northbound			Southbound		
Movement	1	2	3	4	5	6
	L	T	R	L	T	R
Volume (veh/h)	47	121			174	94
Peak-Hour Factor, PHF	0.90	0.90	1.00	1.00	0.90	0.90
Hourly Flow Rate, HFR (veh/h)	52	134	0	0	193	104
Percent Heavy Vehicles	0	--	--	0	--	--
Median Type	Undivided					
RT Channelized			0			0
Lanes	0	1	0	0	1	0
Configuration	LT					TR
Upstream Signal		0			0	

Minor Street	Eastbound			Westbound		
Movement	7	8	9	10	11	12
	L	T	R	L	T	R
Volume (veh/h)	37		29			
Peak-Hour Factor, PHF	0.90	0.90	0.90	1.00	1.00	1.00
Hourly Flow Rate, HFR (veh/h)	41	0	32	0	0	0
Percent Heavy Vehicles	2	0	0	0	0	0
Percent Grade (%)		0			0	
Flared Approach		N			N	
Storage		0			0	
RT Channelized			0			0
Lanes	0	0	0	0	0	0
Configuration		LR				

Delay, Queue Length, and Level of Service

Approach	Northbound	Southbound	Westbound			Eastbound		
Movement	1	4	7	8	9	10	11	12
Lane Configuration	LT						LR	
v (veh/h)	52						73	
C (m) (veh/h)	1276						614	
v/c	0.04						0.12	
95% queue length	0.13						0.40	
Control Delay (s/veh)	7.9						11.7	
LOS	A						B	
Approach Delay (s/veh)	--	--				11.7		
Approach LOS	--	--				B		

Copyright © 2007 University of Florida, All Rights Reserved

HCS+™ Version 5.3 Generated: 10/15/2014 3:51 PM

12

TWO-WAY STOP CONTROL SUMMARY

General Information		Site Information	
Analyst	JMH	Intersection	Jerome/McKitrick
Agency/Co.	EMHT	Jurisdiction	Dublin
Date Performed	10/13/2014	Analysis Year	2024 Full Build - SCHOOL
Analysis Time Period	AM Peak		

Project Description 20131358

East/West Street: McKitrick Rd | North/South Street: Jerome Rd

Intersection Orientation: North-South | Study Period (hrs): 0.25

Vehicle Volumes and Adjustments

Major Street	Northbound			Southbound		
Movement	1	2	3	4	5	6
	L	T	R	L	T	R
Volume (veh/h)	73	336			423	145
Peak-Hour Factor, PHF	0.90	0.90	1.00	1.00	0.90	0.90
Hourly Flow Rate, HFR (veh/h)	81	373	0	0	470	161
Percent Heavy Vehicles	0	--	--	0	--	--
Median Type	Undivided					
RT Channelized			0			0
Lanes	0	1	0	0	1	0
Configuration	LT					TR
Upstream Signal		0			0	

Minor Street	Eastbound			Westbound		
Movement	7	8	9	10	11	12
	L	T	R	L	T	R
Volume (veh/h)	62		50			
Peak-Hour Factor, PHF	0.90	0.90	0.90	1.00	1.00	1.00
Hourly Flow Rate, HFR (veh/h)	68	0	55	0	0	0
Percent Heavy Vehicles	2	0	0	0	0	0
Percent Grade (%)		0			0	
Flared Approach		N			N	
Storage		0			0	
RT Channelized			0			0
Lanes	0	0	0	0	0	0
Configuration		LR				

Delay, Queue Length, and Level of Service

Approach	Northbound	Southbound	Westbound			Eastbound		
Movement	1	4	7	8	9	10	11	12
Lane Configuration	LT						LR	
v (veh/h)	81						123	
C (m) (veh/h)	961						299	
v/c	0.08						0.41	
95% queue length	0.28						1.93	
Control Delay (s/veh)	9.1						25.2	
LOS	A						D	
Approach Delay (s/veh)	--	--	25.2					
Approach LOS	--	--	D					

Copyright © 2007 University of Florida, All Rights Reserved HCS+TM Version 5.3 Generated: 10/15/2014 2:24 PM

/2

TWO-WAY STOP CONTROL SUMMARY

General Information

Analyst	JMH
Agency/Co.	EMHT
Date Performed	10/13/2014
Analysis Time Period	AM Peak

Site Information

Intersection	Jerome/McKitrick
Jurisdiction	Dublin
Analysis Year	2024 FB w/o HCSD - SCHOOL

Project Description 20131358

East/West Street: McKitrick Rd | North/South Street: Jerome Rd

Intersection Orientation: North-South | Study Period (hrs): 0.25

Vehicle Volumes and Adjustments

Major Street	Northbound			Southbound		
Movement	1	2	3	4	5	6
	L	T	R	L	T	R
Volume (veh/h)	76	341			429	138
Peak-Hour Factor, PHF	0.90	0.90	1.00	1.00	0.90	0.90
Hourly Flow Rate, HFR (veh/h)	84	378	0	0	476	153
Percent Heavy Vehicles	0	--	--	0	--	--
Median Type	Undivided					
RT Channelized			0			0
Lanes	0	1	0	0	1	0
Configuration	LT					TR
Upstream Signal		0			0	

Minor Street	Eastbound			Westbound		
Movement	7	8	9	10	11	12
	L	T	R	L	T	R
Volume (veh/h)	57		50			
Peak-Hour Factor, PHF	0.90	0.90	0.90	1.00	1.00	1.00
Hourly Flow Rate, HFR (veh/h)	63	0	55	0	0	0
Percent Heavy Vehicles	2	0	0	0	0	0
Percent Grade (%)		0			0	
Flared Approach		N			N	
Storage		0			0	
RT Channelized			0			0
Lanes	0	0	0	0	0	0
Configuration		LR				

Delay, Queue Length, and Level of Service

Approach	Northbound	Southbound	Westbound			Eastbound		
Movement	1	4	7	8	9	10	11	12
Lane Configuration	LT						LR	
v (veh/h)	84						118	
C (m) (veh/h)	963						298	
v/c	0.09						0.40	
95% queue length	0.29						1.82	
Control Delay (s/veh)	9.1						24.8	
LOS	A						C	
Approach Delay (s/veh)	--	--				24.8		
Approach LOS	--	--				C		

Copyright © 2007 University of Florida, All Rights Reserved

HCS+™ Version 5.3 Generated: 10/15/2014 3:57 PM

12

ALL-WAY STOP CONTROL ANALYSIS

General Information

Analyst	JMH
Agency/Co.	EMHT
Date Performed	10/13/2014
Analysis Time Period	AM Peak

Site Information

Intersection	Jerome/McKitrick
Jurisdiction	Dublin
Analysis Year	2024 Full Build - SCHOOL

Project ID 2013-1358 Riviera TIS

East/West Street: McKitrick Rd

North/South Street: Jerome Rd

Volume Adjustments and Site Characteristics

Approach	Eastbound			Westbound		
Movement	L	T	R	L	T	R
Volume (veh/h)	62	0	50	0	0	0
%Thrus Left Lane						

Approach	Northbound			Southbound		
Movement	L	T	R	L	T	R
Volume (veh/h)	73	336	0	0	423	145
%Thrus Left Lane						

	Eastbound		Westbound		Northbound		Southbound	
	L1	L2	L1	L2	L1	L2	L1	L2
Configuration	LR				LT		TR	
PHF	0.90				0.90		0.90	
Flow Rate (veh/h)	123				454		631	
% Heavy Vehicles	1				0		0	
No. Lanes	1		0		1		1	
Geometry Group	1				1		1	
Duration, T	0.25							

Saturation Headway Adjustment Worksheet

Prop. Left-Turns	0.6				0.2		0.0	
Prop. Right-Turns	0.4				0.0		0.3	
Prop. Heavy Vehicle	0.0				0.0		0.0	
hLT-adj	0.2	0.2			0.2	0.2	0.2	0.2
hRT-adj	-0.6	-0.6			-0.6	-0.6	-0.6	-0.6
hHV-adj	1.7	1.7			1.7	1.7	1.7	1.7
hadj, computed	-0.1				0.0		-0.2	

Departure Headway and Service Time

hd, initial value (s)	3.20				3.20		3.20	
x, initial	0.11				0.40		0.56	
hd, final value (s)	6.26				5.12		4.76	
x, final value	0.21				0.65		0.83	
Move-up time, m (s)	2.0				2.0		2.0	
Service Time, t_s (s)	4.3				3.1		2.8	

Capacity and Level of Service

	Eastbound		Westbound		Northbound		Southbound	
	L1	L2	L1	L2	L1	L2	L1	L2
Capacity (veh/h)	373				689		750	
Delay (s/veh)	10.96				16.99		26.85	
LOS	B				C		D	
Approach: Delay (s/veh)	10.96				16.99		26.85	
LOS	B				C		D	
Intersection Delay (s/veh)	21.53							
Intersection LOS	C							

Copyright © 2007 University of Florida, All Rights Reserved

HCS+™ Version 5.3

Generated: 10/15/2014 2:18 PM

12

ALL-WAY STOP CONTROL ANALYSIS

General Information

Analyst	JMH
Agency/Co.	EMHT
Date Performed	10/13/2014
Analysis Time Period	AM Peak

Site Information

Intersection	Jerome/McKitrick
Jurisdiction	Dublin
Analysis Year	2024 FB w/o HCSD - SCHOOL

Project ID 2013-1358 Riviera TIS

East/West Street: McKitrick Rd

North/South Street: Jerome Rd

Volume Adjustments and Site Characteristics

Approach	Eastbound			Westbound		
Movement	L	T	R	L	T	R
Volume (veh/h)	57	0	50	0	0	0
%Thrus Left Lane						

Approach	Northbound			Southbound		
Movement	L	T	R	L	T	R
Volume (veh/h)	76	341	0	0	429	138
%Thrus Left Lane						

	Eastbound		Westbound		Northbound		Southbound	
	L1	L2	L1	L2	L1	L2	L1	L2
Configuration	LR				LT		TR	
PHF	0.90				0.90		0.90	
Flow Rate (veh/h)	118				462		629	
% Heavy Vehicles	1				0		0	
No. Lanes	1		0		1		1	
Geometry Group	1				1		1	
Duration, T	0.25							

Saturation Headway Adjustment Worksheet

Prop. Left-Turns	0.5				0.2		0.0	
Prop. Right-Turns	0.5				0.0		0.2	
Prop. Heavy Vehicle	0.0				0.0		0.0	
hLT-adj	0.2	0.2			0.2	0.2	0.2	0.2
hRT-adj	-0.6	-0.6			-0.6	-0.6	-0.6	-0.6
hHV-adj	1.7	1.7			1.7	1.7	1.7	1.7
hadj, computed	-0.2				0.0		-0.1	

Departure Headway and Service Time

hd, initial value (s)	3.20				3.20		3.20	
x, initial	0.10				0.41		0.56	
hd, final value (s)	6.26				5.10		4.75	
x, final value	0.21				0.65		0.83	
Move-up time, m (s)	2.0				2.0		2.0	
Service Time, t_s (s)	4.3				3.1		2.8	

Capacity and Level of Service

	Eastbound		Westbound		Northbound		Southbound	
	L1	L2	L1	L2	L1	L2	L1	L2
Capacity (veh/h)	368				692		751	
Delay (s/veh)	10.86				17.23		26.49	
LOS	B				C		D	
Approach: Delay (s/veh)	10.86				17.23		26.49	
LOS	B				C		D	
Intersection Delay (s/veh)	21.43							
Intersection LOS	C							

Copyright © 2007 University of Florida, All Rights Reserved HCS+™ Version 5.3 Generated: 10/15/2014 3:54 PM

MOVEMENT SUMMARY

Site: 2024 AM Full Build w/ HCSD

Roundabout with 1-lane approaches and circulating road

Roundabout

Movement Performance - Vehicles

Mov ID	Turn	Demand Flow veh/h	HV %	Deg. Satn v/c	Average Delay sec	Level of Service	95% Back of Queue Vehicles veh	95% Back of Queue Distance ft	Prop. Queued	Effective Stop Rate per veh	Average Speed mph
South: Jerome Rd											
3L	L	81	0.0	0.359	14.0	LOS B	2.1	53.0	0.25	0.82	31.8
8T	T	373	0.0	0.359	7.5	LOS A	2.1	53.0	0.25	0.50	35.3
Approach		454	0.0	0.359	8.6	LOS A	2.1	53.0	0.25	0.56	34.6
North: Jerome Rd											
4T	T	470	0.0	0.435	7.6	LOS A	2.6	66.0	0.27	0.52	35.2
4R	R	81	0.8	0.435	8.7	LOS A	2.6	66.0	0.27	0.60	34.6
Approach		551	0.1	0.435	7.8	LOS A	2.6	66.0	0.27	0.53	35.1
West: McKitrick Rd											
5L	L	69	1.7	0.154	16.2	LOS B	0.7	17.9	0.52	0.81	30.5
2R	R	56	0.0	0.154	10.7	LOS B	0.7	17.9	0.52	0.70	33.1
Approach		124	0.9	0.154	13.8	LOS B	0.7	17.9	0.52	0.76	31.6
All Vehicles		1130	0.2	0.435	8.8	LOS A	2.6	66.0	0.29	0.57	34.5

Level of Service (LOS) Method: Delay & v/c (HCM 2010).
Roundabout LOS Method: Same as Signalised Intersections.
Vehicle movement LOS values are based on average delay and v/c ratio (degree of saturation) per movement
LOS F will result if v/c > 1 irrespective of movement delay value (does not apply for approaches and intersection).
Intersection and Approach LOS values are based on average delay for all movements (v/c not used as specified in HCM 2010).
Roundabout Capacity Model: SIDRA Standard.
SIDRA Standard Delay Model used.

Copyright © 2000-2011 Akcelik and Associates Pty Ltd
www.sidrasolutions.com

MOVEMENT SUMMARY

Site: 2024 AM Full Build w/o HCSD

Roundabout with 1-lane approaches and circulating road

Roundabout

Movement Performance - Vehicles											
Mov ID	Turn	Demand Flow veh/h	HV %	Deg. Satn v/c	Average Delay sec	Level of Service	95% Back of Queue Vehicles veh	95% Back of Queue Distance ft	Prop. Queued	Effective Stop Rate per veh	Average Speed mph
South: Jerome Rd											
3L	L	84	0.0	0.361	13.9	LOS B	2.2	53.8	0.24	0.82	31.8
8T	T	379	0.0	0.361	7.5	LOS A	2.2	53.8	0.24	0.50	35.3
Approach		463	0.0	0.361	8.6	LOS A	2.2	53.8	0.24	0.56	34.6
North: Jerome Rd											
4T	T	477	0.0	0.496	7.7	LOS A	3.3	81.7	0.30	0.52	35.0
4R	R	153	0.8	0.496	8.8	LOS A	3.3	81.7	0.30	0.60	34.5
Approach		630	0.2	0.496	7.9	LOS A	3.3	81.7	0.30	0.54	34.9
West: McKitrick Rd											
5L	L	63	1.7	0.149	16.2	LOS B	0.7	17.3	0.53	0.81	30.5
2R	R	56	0.0	0.149	10.8	LOS B	0.7	17.3	0.53	0.70	33.0
Approach		119	0.9	0.149	13.7	LOS B	0.7	17.3	0.53	0.76	31.6
All Vehicles		1212	0.2	0.496	8.8	LOS A	3.3	81.7	0.30	0.57	34.4

Level of Service (LOS) Method: Delay & v/c (HCM 2010).
Roundabout LOS Method: Same as Signalised Intersections.
Vehicle movement LOS values are based on average delay and v/c ratio (degree of saturation) per movement
LOS F will result if v/c > 1 irrespective of movement delay value (does not apply for approaches and intersection).
Intersection and Approach LOS values are based on average delay for all movements (v/c not used as specified in HCM 2010).
Roundabout Capacity Model: SIDRA Standard.
SIDRA Standard Delay Model used.

Copyright © 2000-2011 Akcelik and Associates Pty Ltd
www.sidrasolutions.com

12

TWO-WAY STOP CONTROL SUMMARY

General Information		Site Information	
Analyst	JMH	Intersection	Jerome/McKitrick
Agency/Co.	EMHT	Jurisdiction	Dublin
Date Performed	10/13/2014	Analysis Year	2014 Full Build - SCHOOL
Analysis Time Period	PM Peak		

Project Description 20131358

East/West Street: McKitrick Rd | North/South Street: Jerome Rd

Intersection Orientation: North-South | Study Period (hrs): 0.25

Vehicle Volumes and Adjustments

Major Street	Northbound			Southbound		
Movement	1	2	3	4	5	6
	L	T	R	L	T	R
Volume (veh/h)	44	155			163	37
Peak-Hour Factor, PHF	0.90	0.90	1.00	1.00	0.90	0.90
Hourly Flow Rate, HFR (veh/h)	48	172	0	0	181	41
Percent Heavy Vehicles	0	--	--	0	--	--
Median Type	Undivided					
RT Channelized			0			0
Lanes	0	1	0	0	1	0
Configuration	LT					TR
Upstream Signal		0			0	

Minor Street	Eastbound			Westbound		
Movement	7	8	9	10	11	12
	L	T	R	L	T	R
Volume (veh/h)	61		55			
Peak-Hour Factor, PHF	0.90	0.90	0.90	1.00	1.00	1.00
Hourly Flow Rate, HFR (veh/h)	67	0	61	0	0	0
Percent Heavy Vehicles	0	0	1	0	0	0
Percent Grade (%)		0			0	
Flared Approach		N			N	
Storage		0			0	
RT Channelized			0			0
Lanes	0	0	0	0	0	0
Configuration		LR				

Delay, Queue Length, and Level of Service

Approach	Northbound	Southbound	Westbound			Eastbound		
Movement	1	4	7	8	9	10	11	12
Lane Configuration	LT						LR	
v (veh/h)	48						128	
C (m) (veh/h)	1359						648	
v/c	0.04						0.20	
95% queue length	0.11						0.73	
Control Delay (s/veh)	7.7						11.9	
LOS	A						B	
Approach Delay (s/veh)	--	--	11.9					
Approach LOS	--	--	B					

Copyright © 2007 University of Florida, All Rights Reserved HCS+™ Version 5.3 Generated: 10/15/2014 2:15 PM

12

TWO-WAY STOP CONTROL SUMMARY

General Information

Analyst	JMH
Agency/Co.	EMHT
Date Performed	10/13/2014
Analysis Time Period	PM Peak

Site Information

Intersection	Jerome/McKitrick
Jurisdiction	Dublin
Analysis Year	2014 FB w/o HCSD - SCHOOL

Project Description 20131358

East/West Street: McKitrick Rd | North/South Street: Jerome Rd

Intersection Orientation: North-South | Study Period (hrs): 0.25

Vehicle Volumes and Adjustments

Major Street	Northbound			Southbound		
Movement	1	2	3	4	5	6
	L	T	R	L	T	R
Volume (veh/h)	44	157			165	35
Peak-Hour Factor, PHF	0.90	0.90	1.00	1.00	0.90	0.90
Hourly Flow Rate, HFR (veh/h)	48	174	0	0	183	38
Percent Heavy Vehicles	0	--	--	0	--	--
Median Type	Undivided					
RT Channelized			0			0
Lanes	0	1	0	0	1	0
Configuration	LT					TR
Upstream Signal		0			0	

Minor Street	Eastbound			Westbound		
Movement	7	8	9	10	11	12
	L	T	R	L	T	R
Volume (veh/h)	59		58			
Peak-Hour Factor, PHF	0.90	0.90	0.90	1.00	1.00	1.00
Hourly Flow Rate, HFR (veh/h)	65	0	64	0	0	0
Percent Heavy Vehicles	0	0	1	0	0	0
Percent Grade (%)		0			0	
Flared Approach		N			N	
Storage		0			0	
RT Channelized			0			0
Lanes	0	0	0	0	0	0
Configuration		LR				

Delay, Queue Length, and Level of Service

Approach	Northbound	Southbound	Westbound			Eastbound		
Movement	1	4	7	8	9	10	11	12
Lane Configuration	LT						LR	
v (veh/h)	48						129	
C (m) (veh/h)	1360						652	
v/c	0.04						0.20	
95% queue length	0.11						0.73	
Control Delay (s/veh)	7.7						11.9	
LOS	A						B	
Approach Delay (s/veh)	--	--	11.9					
Approach LOS	--	--	B					

Copyright © 2007 University of Florida, All Rights Reserved HCS+™ Version 5.3 Generated: 10/15/2014 3:52 PM

12

TWO-WAY STOP CONTROL SUMMARY

General Information		Site Information	
Analyst	JMH	Intersection	Jerome/McKitrick
Agency/Co.	EMHT	Jurisdiction	Dublin
Date Performed	10/13/2014	Analysis Year	2024 Full Build - SCHOOL
Analysis Time Period	PM Peak		

Project Description 20131358

East/West Street: McKitrick Rd | North/South Street: Jerome Rd

Intersection Orientation: North-South | Study Period (hrs): 0.25

Vehicle Volumes and Adjustments

Major Street	Northbound			Southbound		
Movement	1	2	3	4	5	6
	L	T	R	L	T	R
Volume (veh/h)	78	428			423	58
Peak-Hour Factor, PHF	0.90	0.90	1.00	1.00	0.90	0.90
Hourly Flow Rate, HFR (veh/h)	86	475	0	0	470	64
Percent Heavy Vehicles	0	--	--	0	--	--
Median Type	Undivided					
RT Channelized			0			0
Lanes	0	1	0	0	1	0
Configuration	LT					TR
Upstream Signal		0			0	

Minor Street	Eastbound			Westbound		
Movement	7	8	9	10	11	12
	L	T	R	L	T	R
Volume (veh/h)	93		99			
Peak-Hour Factor, PHF	0.90	0.90	0.90	1.00	1.00	1.00
Hourly Flow Rate, HFR (veh/h)	103	0	110	0	0	0
Percent Heavy Vehicles	0	0	1	0	0	0
Percent Grade (%)		0			0	
Flared Approach		N			N	
Storage		0			0	
RT Channelized			0			0
Lanes	0	0	0	0	0	0
Configuration		LR				

Delay, Queue Length, and Level of Service

Approach	Northbound	Southbound	Westbound			Eastbound		
Movement	1	4	7	8	9	10	11	12
Lane Configuration	LT						LR	
v (veh/h)	86						213	
C (m) (veh/h)	1044						304	
v/c	0.08						0.70	
95% queue length	0.27						4.91	
Control Delay (s/veh)	8.8						40.4	
LOS	A						E	
Approach Delay (s/veh)	--	--	40.4					
Approach LOS	--	--	E					

Copyright © 2007 University of Florida, All Rights Reserved

HCS+™ Version 5.3

Generated: 10/15/2014 2:25 PM

12

TWO-WAY STOP CONTROL SUMMARY

General Information

Analyst	JMH
Agency/Co.	EMHT
Date Performed	10/13/2014
Analysis Time Period	PM Peak

Site Information

Intersection	Jerome/McKitrick
Jurisdiction	Dublin
Analysis Year	2024 FB w/o HCSD - SCHOOL

Project Description 20131358

East/West Street: McKitrick Rd | North/South Street: Jerome Rd

Intersection Orientation: North-South | Study Period (hrs): 0.25

Vehicle Volumes and Adjustments

Major Street	Northbound			Southbound		
Movement	1	2	3	4	5	6
	L	T	R	L	T	R
Volume (veh/h)	78	430			425	56
Peak-Hour Factor, PHF	0.90	0.90	1.00	1.00	0.90	0.90
Hourly Flow Rate, HFR (veh/h)	86	477	0	0	472	62
Percent Heavy Vehicles	0	--	--	0	--	--
Median Type	Undivided					
RT Channelized			0			0
Lanes	0	1	0	0	1	0
Configuration	LT					TR
Upstream Signal		0			0	

Minor Street	Eastbound			Westbound		
Movement	7	8	9	10	11	12
	L	T	R	L	T	R
Volume (veh/h)	91		102			
Peak-Hour Factor, PHF	0.90	0.90	0.90	1.00	1.00	1.00
Hourly Flow Rate, HFR (veh/h)	101	0	113	0	0	0
Percent Heavy Vehicles	0	0	1	0	0	0
Percent Grade (%)		0			0	
Flared Approach		N			N	
Storage		0			0	
RT Channelized			0			0
Lanes	0	0	0	0	0	0
Configuration		LR				

Delay, Queue Length, and Level of Service

Approach	Northbound	Southbound	Westbound			Eastbound		
Movement	1	4	7	8	9	10	11	12
Lane Configuration	LT						LR	
v (veh/h)	86						214	
C (m) (veh/h)	1044						308	
v/c	0.08						0.69	
95% queue length	0.27						4.84	
Control Delay (s/veh)	8.8						39.5	
LOS	A						E	
Approach Delay (s/veh)	--	--	39.5					
Approach LOS	--	--	E					

Copyright © 2007 University of Florida, All Rights Reserved HCS+TM Version 5.3 Generated: 10/15/2014 3:58 PM

ALL-WAY STOP CONTROL ANALYSIS

General Information

Analyst	JMH
Agency/Co.	EMHT
Date Performed	10/13/2014
Analysis Time Period	PM Peak

Site Information

Intersection	Jerome/McKitrick
Jurisdiction	Dublin
Analysis Year	2024 Full Build - SCHOOL

Project ID 2013-1358 Riviera TIS

East/West Street: McKitrick Rd

North/South Street: Jerome Rd

Volume Adjustments and Site Characteristics

Approach	Eastbound			Westbound		
Movement	L	T	R	L	T	R
Volume (veh/h)	93	0	99	0	0	0
%Thrus Left Lane						

Approach	Northbound			Southbound		
Movement	L	T	R	L	T	R
Volume (veh/h)	78	428	0	0	423	58
%Thrus Left Lane						

	Eastbound		Westbound		Northbound		Southbound	
	L1	L2	L1	L2	L1	L2	L1	L2
Configuration	LR				LT		TR	
PHF	0.90				0.90		0.90	
Flow Rate (veh/h)	213				561		534	
% Heavy Vehicles	1				0		2	
No. Lanes	1		0		1		1	
Geometry Group	1				1		1	
Duration, T	0.25							

Saturation Headway Adjustment Worksheet

Prop. Left-Turns	0.5				0.2		0.0	
Prop. Right-Turns	0.5				0.0		0.1	
Prop. Heavy Vehicle	0.0				0.0		0.0	
hLT-adj	0.2	0.2			0.2	0.2	0.2	0.2
hRT-adj	-0.6	-0.6			-0.6	-0.6	-0.6	-0.6
hHV-adj	1.7	1.7			1.7	1.7	1.7	1.7
hadj, computed	-0.2				0.0		-0.0	

Departure Headway and Service Time

hd, initial value (s)	3.20				3.20		3.20	
x, initial	0.19				0.50		0.47	
hd, final value (s)	6.47				5.49		5.46	
x, final value	0.38				0.86		0.81	
Move-up time, m (s)	2.0				2.0		2.0	
Service Time, t_s (s)	4.5				3.5		3.5	

Capacity and Level of Service

	Eastbound		Westbound		Northbound		Southbound	
	L1	L2	L1	L2	L1	L2	L1	L2
Capacity (veh/h)	463				649		650	
Delay (s/veh)	13.42				32.26		27.56	
LOS	B				D		D	
Approach: Delay (s/veh)	13.42				32.26		27.56	
LOS	B				D		D	
Intersection Delay (s/veh)	27.27							
Intersection LOS	D							

Copyright © 2007 University of Florida, All Rights Reserved

HCS+™ Version 5.3

Generated: 10/15/2014 2:19 PM

12

ALL-WAY STOP CONTROL ANALYSIS

General Information

Analyst	JMH
Agency/Co.	EMHT
Date Performed	10/13/2014
Analysis Time Period	PM Peak

Site Information

Intersection	Jerome/McKitrick
Jurisdiction	Dublin
Analysis Year	2024 FB w/o HCSD - SCHOOL

Project ID 2013-1358 Riviera TIS

East/West Street: McKitrick Rd | North/South Street: Jerome Rd

Volume Adjustments and Site Characteristics

Approach	Eastbound			Westbound		
Movement	L	T	R	L	T	R
Volume (veh/h)	91	0	102	0	0	0
%Thrus Left Lane						

Approach	Northbound			Southbound		
Movement	L	T	R	L	T	R
Volume (veh/h)	78	430	0	0	425	56
%Thrus Left Lane						

	Eastbound		Westbound		Northbound		Southbound	
	L1	L2	L1	L2	L1	L2	L1	L2
Configuration	LR				LT		TR	
PHF	0.90				0.90		0.90	
Flow Rate (veh/h)	214				563		534	
% Heavy Vehicles	1				0		2	
No. Lanes	1		0		1		1	
Geometry Group	1				1		1	
Duration, T	0.25							

Saturation Headway Adjustment Worksheet

Prop. Left-Turns	0.5				0.2		0.0	
Prop. Right-Turns	0.5				0.0		0.1	
Prop. Heavy Vehicle	0.0				0.0		0.0	
hLT-adj	0.2	0.2			0.2	0.2	0.2	0.2
hRT-adj	-0.6	-0.6			-0.6	-0.6	-0.6	-0.6
hHV-adj	1.7	1.7			1.7	1.7	1.7	1.7
hadj, computed	-0.2				0.0		-0.0	

Departure Headway and Service Time

hd, initial value (s)	3.20				3.20		3.20	
x, initial	0.19				0.50		0.47	
hd, final value (s)	6.46				5.49		5.47	
x, final value	0.38				0.86		0.81	
Move-up time, m (s)	2.0				2.0		2.0	
Service Time, t_s (s)	4.5				3.5		3.5	

Capacity and Level of Service

	Eastbound		Westbound		Northbound		Southbound	
	L1	L2	L1	L2	L1	L2	L1	L2
Capacity (veh/h)	464				649		649	
Delay (s/veh)	13.44				32.74		27.73	
LOS	B				D		D	
Approach: Delay (s/veh)	13.44				32.74		27.73	
LOS	B				D		D	
Intersection Delay (s/veh)	27.55							
Intersection LOS	D							

Copyright © 2007 University of Florida, All Rights Reserved HCS+™ Version 5.3 Generated: 10/15/2014 3:55 PM

MOVEMENT SUMMARY

Site: 2024 PM Full Build w/ HCSD

Roundabout with 1-lane approaches and circulating road

Roundabout

Movement Performance - Vehicles											
Mov ID	Turn	Demand Flow veh/h	HV %	Deg. Satn v/c	Average Delay sec	Level of Service	95% Back of Queue Vehicles veh	95% Back of Queue Distance ft	Prop. Queued	Effective Stop Rate per veh	Average Speed mph
South: Jerome Rd											
3L	L	87	0.0	0.464	14.2	LOS B	3.1	78.3	0.35	0.81	31.8
8T	T	476	0.0	0.464	7.8	LOS A	3.1	78.3	0.35	0.53	34.7
Approach		562	0.0	0.464	8.8	LOS A	3.1	78.3	0.35	0.57	34.2
North: Jerome Rd											
4T	T	470	1.7	0.435	7.7	LOS A	2.7	68.3	0.29	0.52	35.1
4R	R	64	1.6	0.435	8.8	LOS A	2.7	68.3	0.29	0.61	34.5
Approach		534	1.7	0.435	7.9	LOS A	2.7	68.3	0.29	0.53	35.0
West: McKitrick Rd											
5L	L	103	1.3	0.266	16.5	LOS B	1.3	33.4	0.57	0.85	30.3
2R	R	110	0.0	0.266	11.1	LOS B	1.3	33.4	0.57	0.74	32.9
Approach		213	0.6	0.266	13.7	LOS B	1.3	33.4	0.57	0.79	31.6
All Vehicles		1310	0.8	0.464	9.2	LOS A	3.1	78.3	0.36	0.59	34.0

Level of Service (LOS) Method: Delay & v/c (HCM 2010).
Roundabout LOS Method: Same as Signalised Intersections.
Vehicle movement LOS values are based on average delay and v/c ratio (degree of saturation) per movement
LOS F will result if v/c > 1 irrespective of movement delay value (does not apply for approaches and intersection).
Intersection and Approach LOS values are based on average delay for all movements (v/c not used as specified in HCM 2010).
Roundabout Capacity Model: SIDRA Standard.
SIDRA Standard Delay Model used.

Copyright © 2000-2011 Akcelik and Associates Pty Ltd
www.sidrasolutions.com

MOVEMENT SUMMARY

Site: 2024 PM Full Build w/o HCSD

Roundabout with 1-lane approaches and circulating road

Roundabout

Movement Performance - Vehicles											
Mov ID	Turn	Demand Flow veh/h	HV %	Deg. Satn v/c	Average Delay sec	Level of Service	95% Back of Queue Vehicles veh	95% Back of Queue Distance ft	Prop. Queued	Effective Stop Rate per veh	Average Speed mph
South: Jerome Rd											
3L	L	87	0.0	0.464	14.2	LOS B	3.1	78.5	0.35	0.81	31.8
8T	T	478	0.0	0.464	7.8	LOS A	3.1	78.5	0.35	0.53	34.7
Approach		564	0.0	0.464	8.7	LOS A	3.1	78.5	0.35	0.57	34.2
North: Jerome Rd											
4T	T	472	1.7	0.435	7.7	LOS A	2.7	68.2	0.29	0.52	35.1
4R	R	62	1.6	0.435	8.8	LOS A	2.7	68.2	0.29	0.61	34.5
Approach		534	1.7	0.435	7.8	LOS A	2.7	68.2	0.29	0.53	35.0
West: McKitrick Rd											
5L	L	101	1.3	0.268	16.5	LOS B	1.3	33.7	0.57	0.85	30.3
2R	R	113	0.0	0.268	11.1	LOS B	1.3	33.7	0.57	0.75	32.9
Approach		214	0.6	0.268	13.6	LOS B	1.3	33.7	0.57	0.79	31.6
All Vehicles		1313	0.8	0.464	9.2	LOS A	3.1	78.5	0.36	0.59	34.1

Level of Service (LOS) Method: Delay & v/c (HCM 2010).
Roundabout LOS Method: Same as Signalised Intersections.
Vehicle movement LOS values are based on average delay and v/c ratio (degree of saturation) per movement
LOS F will result if v/c > 1 irrespective of movement delay value (does not apply for approaches and intersection).
Intersection and Approach LOS values are based on average delay for all movements (v/c not used as specified in HCM 2010).
Roundabout Capacity Model: SIDRA Standard.
SIDRA Standard Delay Model used.

Copyright © 2000-2011 Akcelik and Associates Pty Ltd
www.sidrasolutions.com

APPENDIX K

TURN LANE SIZING CALCULATIONS
w/ Deer Run Elementary School

Riviera
Traffic Impact Study
Turn Lane Length Calculations

AM Peak Hour
2014 Full Build (w/ Hyland-Croy Site Dr)

Avery Rd & Site Dr		
Movement	**NBLT**	
Design Speed	40	mph
Cycle Length	60	seconds
Control (Stop or Signal)	Stop	
Through Volume	177	vph
Number of Through Lanes	1	
Turning Volume	44	vph
Number of Turning Lanes	1	
Design Condition	C	A, B, or C
Turning Percentage	20%	
Vehicles Per Cycle	0.7	
Storage Length	50	feet
Deceleration/Taper	111	feet
Calculated Turn Lane Length	161	feet
No Block Distance	N.A.	feet
No Block Turn Lane Length	N.A.	feet

PM Peak Hour
2014 Full Build (w/ Hyland-Croy Site Dr)

Avery Rd & Site Dr		
Movement	**NBLT**	
Design Speed	40	mph
Cycle Length	60	seconds
Control (Stop or Signal)	Stop	
Through Volume	384	vph
Number of Through Lanes	1	
Turning Volume	61	vph
Number of Turning Lanes	1	
Design Condition	C	A, B, or C
Turning Percentage	14%	
Vehicles Per Cycle	1.0	
Storage Length	50	feet
Deceleration/Taper	111	feet
Calculated Turn Lane Length	161	feet
No Block Distance	N.A.	feet
No Block Turn Lane Length	N.A.	feet

Riviera

Traffic Impact Study

Turn Lane Length Calculations

AM Peak Hour

2014 Full Build (w/o Hyland-Croy Site Dr)

Avery Rd & Site Dr		
Movement	**NBLT**	
Design Speed	40	mph
Cycle Length	60	seconds
Control (Stop or Signal)	Stop	
Through Volume	177	vph
Number of Through Lanes	1	
Turning Volume	54	vph
Number of Turning Lanes	1	
Design Condition	C	A, B, or C
Turning Percentage	23%	
Vehicles Per Cycle	0.9	
Storage Length	50	feet
Deceleration/Taper	111	feet
Calculated Turn Lane Length	161	feet
No Block Distance	N.A.	feet
No Block Turn Lane Length	N.A.	feet

PM Peak Hour

2014 Full Build (w/o Hyland-Croy Site Dr)

Avery Rd & Site Dr		
Movement	**NBLT**	
Design Speed	40	mph
Cycle Length	60	seconds
Control (Stop or Signal)	Stop	
Through Volume	384	vph
Number of Through Lanes	1	
Turning Volume	80	vph
Number of Turning Lanes	1	
Design Condition	C	A, B, or C
Turning Percentage	17%	
Vehicles Per Cycle	1.3	
Storage Length	50	feet
Deceleration/Taper	111	feet
Calculated Turn Lane Length	161	feet
No Block Distance	N.A.	feet
No Block Turn Lane Length	N.A.	feet

Riviera
Traffic Impact Study
Turn Lane Length Calculations

AM Peak Hour
2024 Full Build (w/ Hyland-Croy Site Dr)

Avery Rd & Site Dr		
Movement	**NBLT**	
Design Speed	40	mph
Cycle Length	60	seconds
Control (Stop or Signal)	Stop	
Through Volume	366	vph
Number of Through Lanes	1	
Turning Volume	44	vph
Number of Turning Lanes	1	
Design Condition	C	A, B, or C
Turning Percentage	11%	
Vehicles Per Cycle	0.7	
Storage Length	50	feet
Deceleration/Taper	111	feet
Calculated Turn Lane Length	161	feet
No Block Distance	N.A.	feet
No Block Turn Lane Length	N.A.	feet

PM Peak Hour
2024 Full Build (w/ Hyland-Croy Site Dr)

Avery Rd & Site Dr		
Movement	**NBLT**	
Design Speed	40	mph
Cycle Length	60	seconds
Control (Stop or Signal)	Stop	
Through Volume	653	vph
Number of Through Lanes	1	
Turning Volume	61	vph
Number of Turning Lanes	1	
Design Condition	B	A, B, or C
Turning Percentage	9%	
Vehicles Per Cycle	1.0	
Storage Length	50	feet
Deceleration/Taper	125	feet
Calculated Turn Lane Length	125	feet
No Block Distance	N.A.	feet
No Block Turn Lane Length	N.A.	feet

Riviera
Traffic Impact Study
Turn Lane Length Calculations

AM Peak Hour
2024 Full Build (w/o Hyland-Croy Site Dr)

Avery Rd & Site Dr		
Movement	**NBLT**	
Design Speed	40	mph
Cycle Length	60	seconds
Control (Stop or Signal)	Stop	
Through Volume	366	vph
Number of Through Lanes	1	
Turning Volume	54	vph
Number of Turning Lanes	1	
Design Condition	C	A, B, or C
Turning Percentage	13%	
Vehicles Per Cycle	0.9	
Storage Length	50	feet
Deceleration/Taper	111	feet
Calculated Turn Lane Length	161	feet
No Block Distance	N.A.	feet
No Block Turn Lane Length	N.A.	feet

PM Peak Hour
2024 Full Build (w/o Hyland-Croy Site Dr)

Avery Rd & Site Dr		
Movement	**NBLT**	
Design Speed	40	mph
Cycle Length	60	seconds
Control (Stop or Signal)	Stop	
Through Volume	653	vph
Number of Through Lanes	1	
Turning Volume	80	vph
Number of Turning Lanes	1	
Design Condition	C	A, B, or C
Turning Percentage	11%	
Vehicles Per Cycle	1.3	
Storage Length	50	feet
Deceleration/Taper	111	feet
Calculated Turn Lane Length	161	feet
No Block Distance	N.A.	feet
No Block Turn Lane Length	N.A.	feet

Riviera
Traffic Impact Study
Turn Lane Length Calculations

AM Peak Hour

2024 Full Build (w/o Hyland-Croy Site Dr)

Avery Rd & Site Dr		
Movement	**SBRT**	
Design Speed	40	mph
Cycle Length	60	seconds
Control (Stop or Signal)	Stop	
Through Volume	421	vph
Number of Through Lanes	1	
Turning Volume	58	vph
Number of Turning Lanes	1	
Design Condition	C	A, B, or C
Turning Percentage	12%	
Vehicles Per Cycle	1.0	
Storage Length	50	feet
Deceleration/Taper	111	feet
Calculated Turn Lane Length	161	feet
No Block Distance	N.A.	feet
No Block Turn Lane Length	N.A.	feet

PM Peak Hour

2024 Full Build (w/o Hyland-Croy Site Dr)

Avery Rd & Site Dr		
Movement	**SBRT**	
Design Speed	40	mph
Cycle Length	60	seconds
Control (Stop or Signal)	Stop	
Through Volume	526	vph
Number of Through Lanes	1	
Turning Volume	60	vph
Number of Turning Lanes	1	
Design Condition	B	A, B, or C
Turning Percentage	10%	
Vehicles Per Cycle	1.0	
Storage Length	50	feet
Deceleration/Taper	125	feet
Calculated Turn Lane Length	125	feet
No Block Distance	N.A.	feet
No Block Turn Lane Length	N.A.	feet

Riviera
Traffic Impact Study
Turn Lane Length Calculations

AM Peak Hour

2014 Full Build

Hyland-Croy Rd & Site Dr		
Movement	**SBLT**	
Design Speed	50	mph
Cycle Length	60	seconds
Control (Stop or Signal)	Stop	
Through Volume	352	vph
Number of Through Lanes	1	
Turning Volume	24	vph
Number of Turning Lanes	1	
Design Condition	B	A, B, or C
Turning Percentage	6%	
Vehicles Per Cycle	0.4	
Storage Length	50	feet
Deceleration/Taper	225	feet
Calculated Turn Lane Length	225	feet
No Block Distance	N.A.	feet
No Block Turn Lane Length	N.A.	feet

PM Peak Hour

2014 Full Build

Hyland-Croy Rd & Site Dr		
Movement	**SBLT**	
Design Speed	50	mph
Cycle Length	60	seconds
Control (Stop or Signal)	Stop	
Through Volume	210	vph
Number of Through Lanes	1	
Turning Volume	14	vph
Number of Turning Lanes	1	
Design Condition	B	A, B, or C
Turning Percentage	6%	
Vehicles Per Cycle	0.2	
Storage Length	50	feet
Deceleration/Taper	225	feet
Calculated Turn Lane Length	225	feet
No Block Distance	N.A.	feet
No Block Turn Lane Length	N.A.	feet

Riviera
Traffic Impact Study
Turn Lane Length Calculations

AM Peak Hour

2024 Full Build

Hyland-Croy Rd & Site Dr		
Movement	**SBLT**	
Design Speed	50	mph
Cycle Length	60	seconds
Control (Stop or Signal)	Stop	
Through Volume	843	vph
Number of Through Lanes	1	
Turning Volume	24	vph
Number of Turning Lanes	1	
Design Condition	B	A, B, or C
Turning Percentage	3%	
Vehicles Per Cycle	0.4	
Storage Length	50	feet
Deceleration/Taper	225	feet
Calculated Turn Lane Length	225	feet
No Block Distance	N.A.	feet
No Block Turn Lane Length	N.A.	feet

PM Peak Hour

2024 Full Build

Hyland-Croy Rd & Site Dr		
Movement	**SBLT**	
Design Speed	50	mph
Cycle Length	60	seconds
Control (Stop or Signal)	Stop	
Through Volume	584	vph
Number of Through Lanes	1	
Turning Volume	14	vph
Number of Turning Lanes	1	
Design Condition	B	A, B, or C
Turning Percentage	2%	
Vehicles Per Cycle	0.2	
Storage Length	50	feet
Deceleration/Taper	225	feet
Calculated Turn Lane Length	225	feet
No Block Distance	N.A.	feet
No Block Turn Lane Length	N.A.	feet

Riviera
Traffic Impact Study
Turn Lane Length Calculations

AM Peak Hour

2024 Full Build

Hyland-Croy Rd & Site Dr		
Movement	**NBRT**	
Design Speed	50	mph
Cycle Length	60	seconds
Control (Stop or Signal)	Stop	
Through Volume	508	vph
Number of Through Lanes	1	
Turning Volume	51	vph
Number of Turning Lanes	1	
Design Condition	B	A, B, or C
Turning Percentage	9%	
Vehicles Per Cycle	0.9	
Storage Length	50	feet
Deceleration/Taper	225	feet
Calculated Turn Lane Length	225	feet
No Block Distance	N.A.	feet
No Block Turn Lane Length	N.A.	feet

PM Peak Hour

2024 Full Build

Hyland-Croy Rd & Site Dr		
Movement	**NBRT**	
Design Speed	50	mph
Cycle Length	60	seconds
Control (Stop or Signal)	Stop	
Through Volume	807	vph
Number of Through Lanes	1	
Turning Volume	44	vph
Number of Turning Lanes	1	
Design Condition	B	A, B, or C
Turning Percentage	5%	
Vehicles Per Cycle	0.7	
Storage Length	50	feet
Deceleration/Taper	225	feet
Calculated Turn Lane Length	225	feet
No Block Distance	N.A.	feet
No Block Turn Lane Length	N.A.	feet

APPENDIX L

SIGHT TRAFFIC AS A PERCENTAGE OF TOTAL TRAFFIC CALCULATIONS w/ Deer Run Elementary School

Riviera

Traffic Impact Study

Trip Generation Calculations

Institute of Transportation Engineers, 9th Edition

Land Use	Square Feet or Units	ITE Code	Time Period	ITE Formula	Total Trips	Trips Entering	Trips Exiting
Single Family - Detached	240 units	210	ADT	Ln(T)=0.92Ln(x)+2.72	2,350	1,175	1,175
			AM Peak	T=0.70(x)+9.74	178	45	133
			PM Peak	Ln(T)=0.90Ln(x)+0.51	231	146	85
TOTAL				***ADT***	***2,350***	***1,175***	***1,175***
				AM TOTAL	***178***	***45***	***133***
				PM TOTAL	***231***	***146***	***85***

Riviera
Traffic Impact Study
Traffic Volume Calculations

Total Site Trips - w/ Hyland-Croy Site Drive
(240 Single Family Units)

AM Peak Hour
G=G1+G2

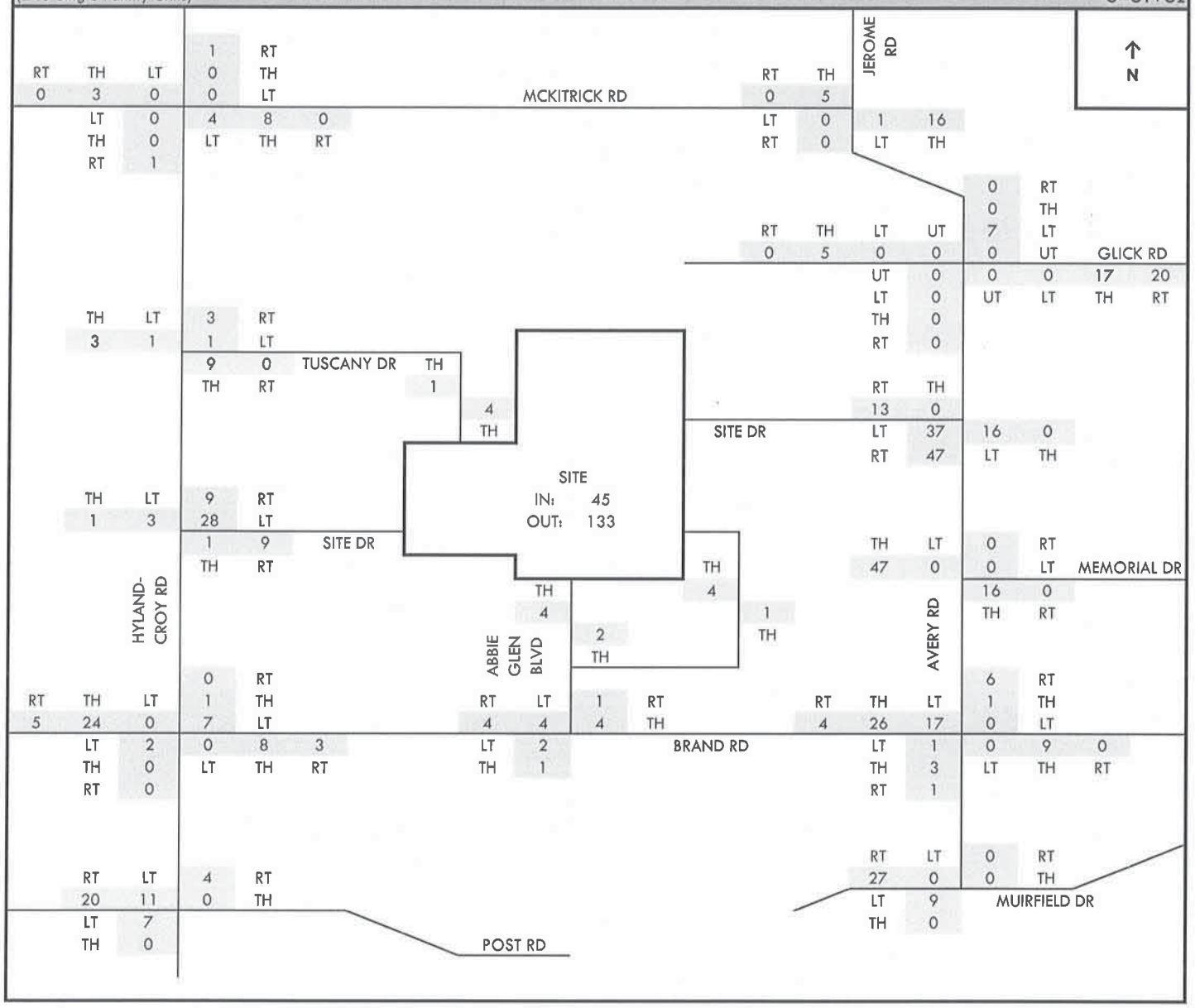

Riviera
Traffic Impact Study
Traffic Volume Calculations

Total Site Trips - w/o Hyland-Croy Site Drive **AM Peak Hour**
(240 Single Family Units) J=J1+J2

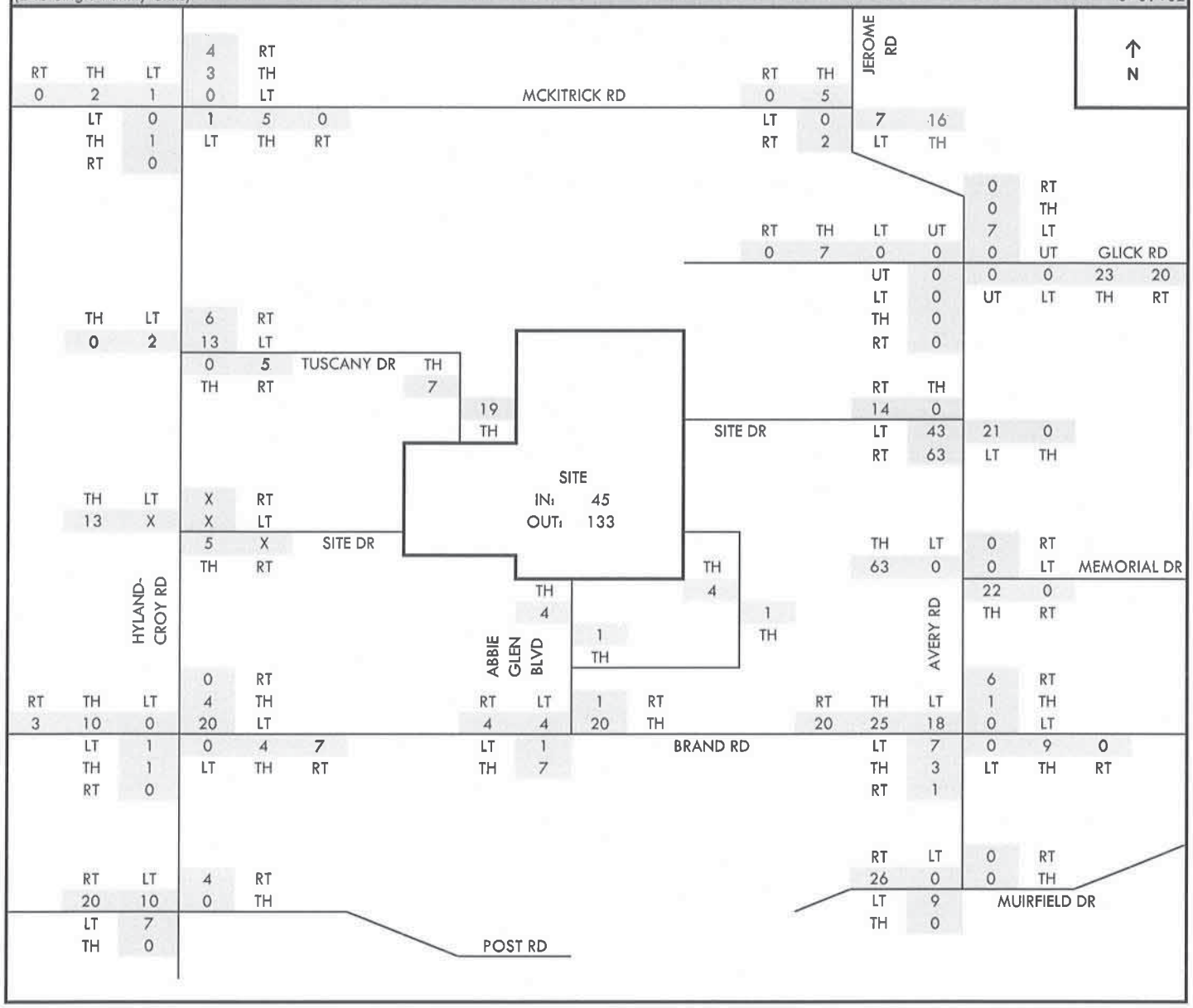

Riviera
Traffic Impact Study
Traffic Volume Calculations

2024 Full Build Traffic - w/ Hyland-Croy Site Drive — **AM Peak Hour**
w/ Proposed Elementary School (240 Single Family Units) — R=R1+P

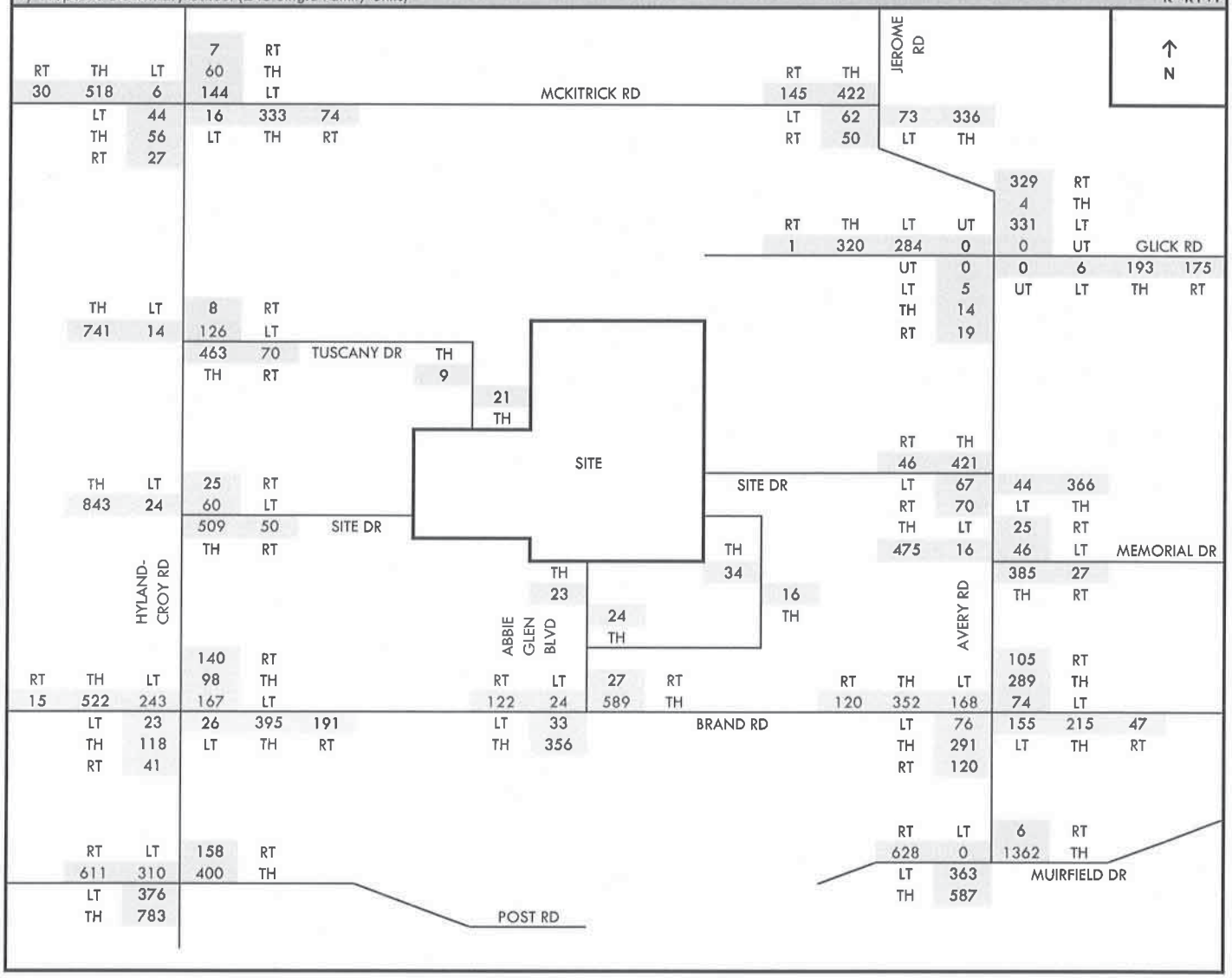

Riviera
Traffic Impact Study
Traffic Volume Calculations

2024 Full Build Traffic - w/o Hyland-Croy Site Drive — **AM Peak Hour**
w/ Proposed Elementary School (240 Single Family Units) — V=V1+T

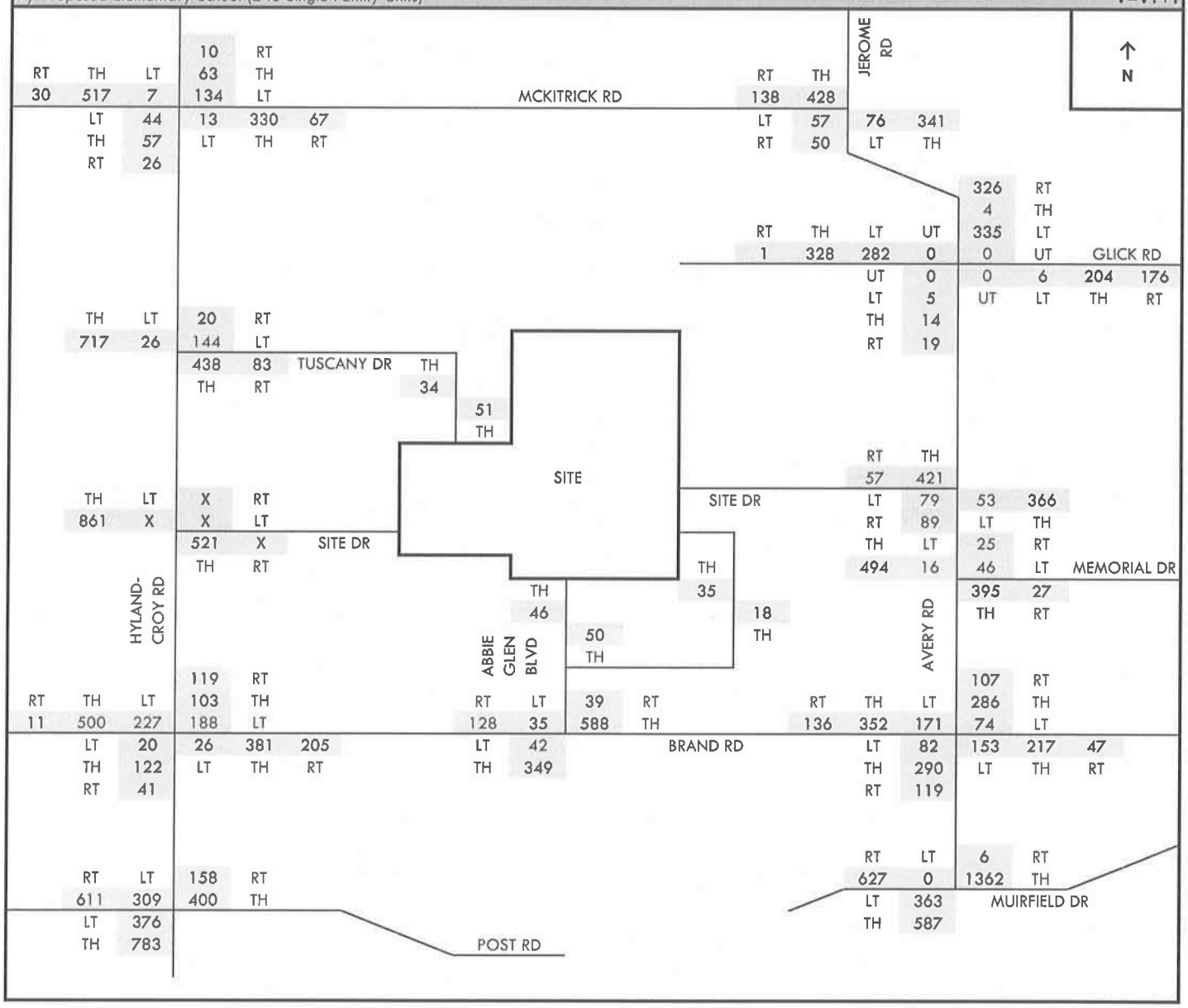

Riviera
Traffic Impact Study
Traffic Volume Calculations

Total Site Trips - w/ Hyland-Croy Site Drive **PM Peak Hour**
(240 Single Family Units) **G=G1+G2**

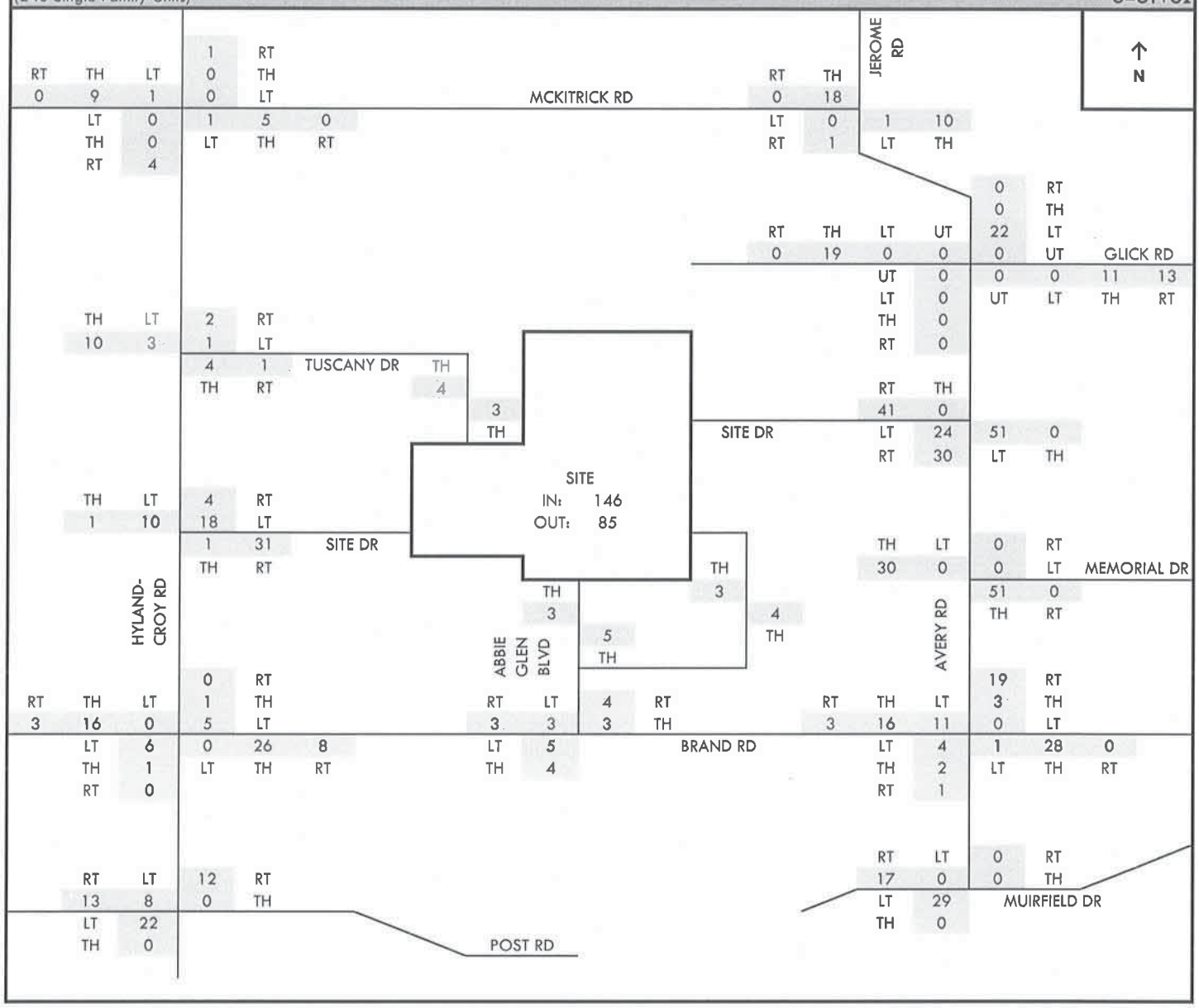

Riviera
Traffic Impact Study
Traffic Volume Calculations

Total Site Trips - w/o Hyland-Croy Site Drive
(240 Single Family Units)

PM Peak Hour
J=J1+J2

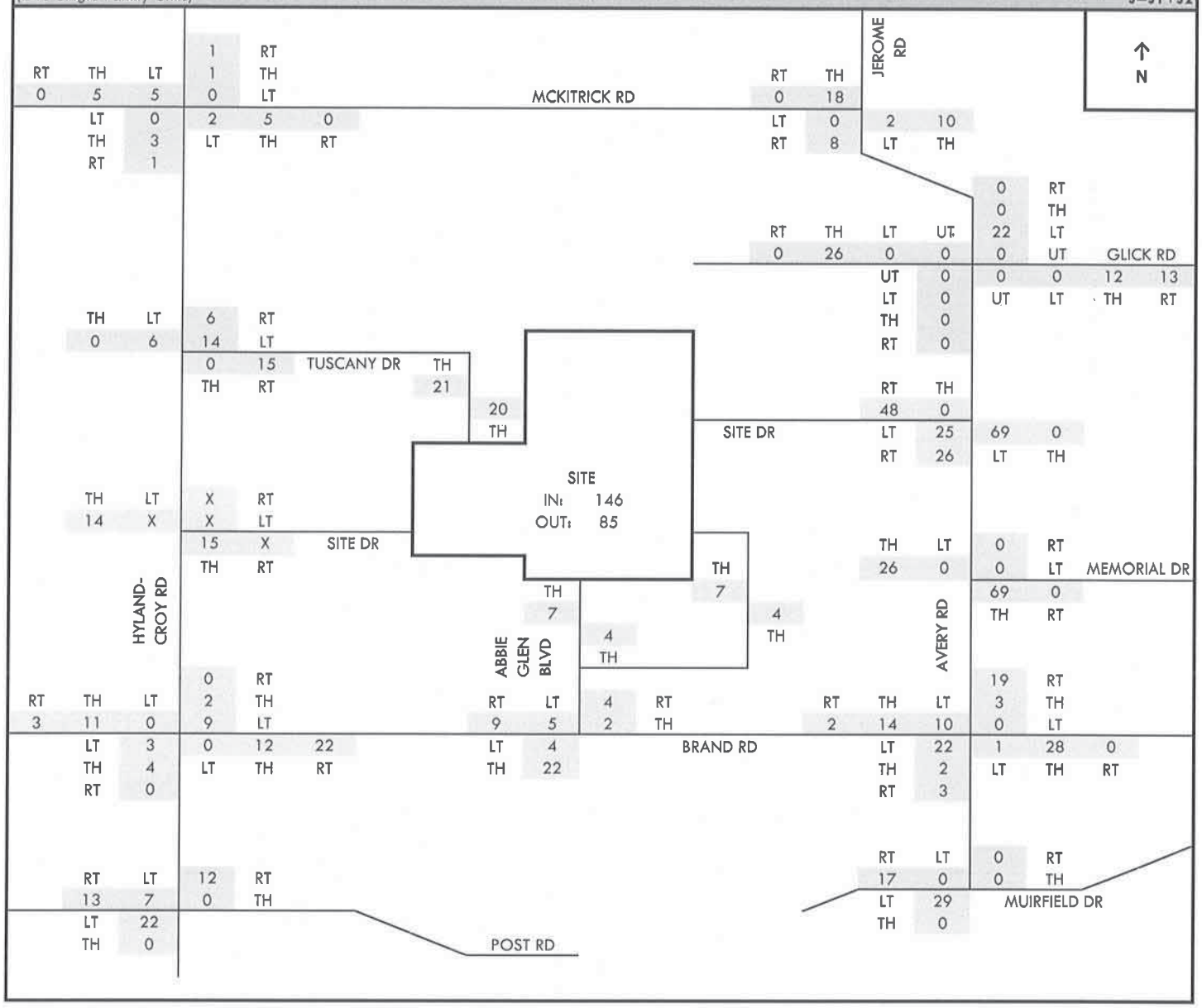

Riviera
Traffic Impact Study
Traffic Volume Calculations

2024 Full Build Traffic - w/ Hyland-Croy Site Drive — PM Peak Hour
w/ Proposed Elementary School (240 Single Family Units) — R=R1+P

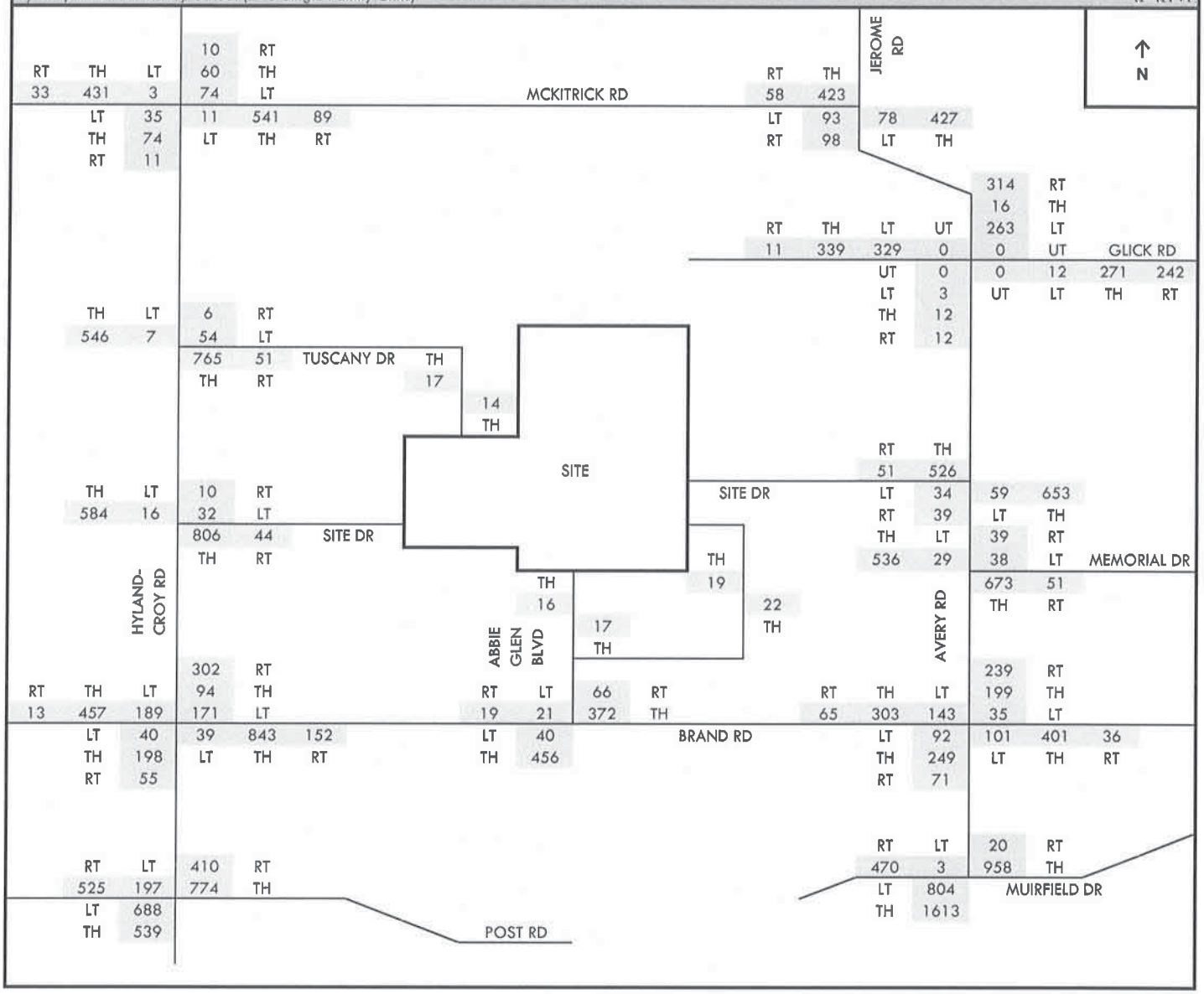

Riviera
Traffic Impact Study
Traffic Volume Calculations

2024 Full Build Traffic - w/o Hyland-Croy Site Drive — **PM Peak Hour**
w/ Proposed Elementary School (240 Single Family Units) — V=V1+T

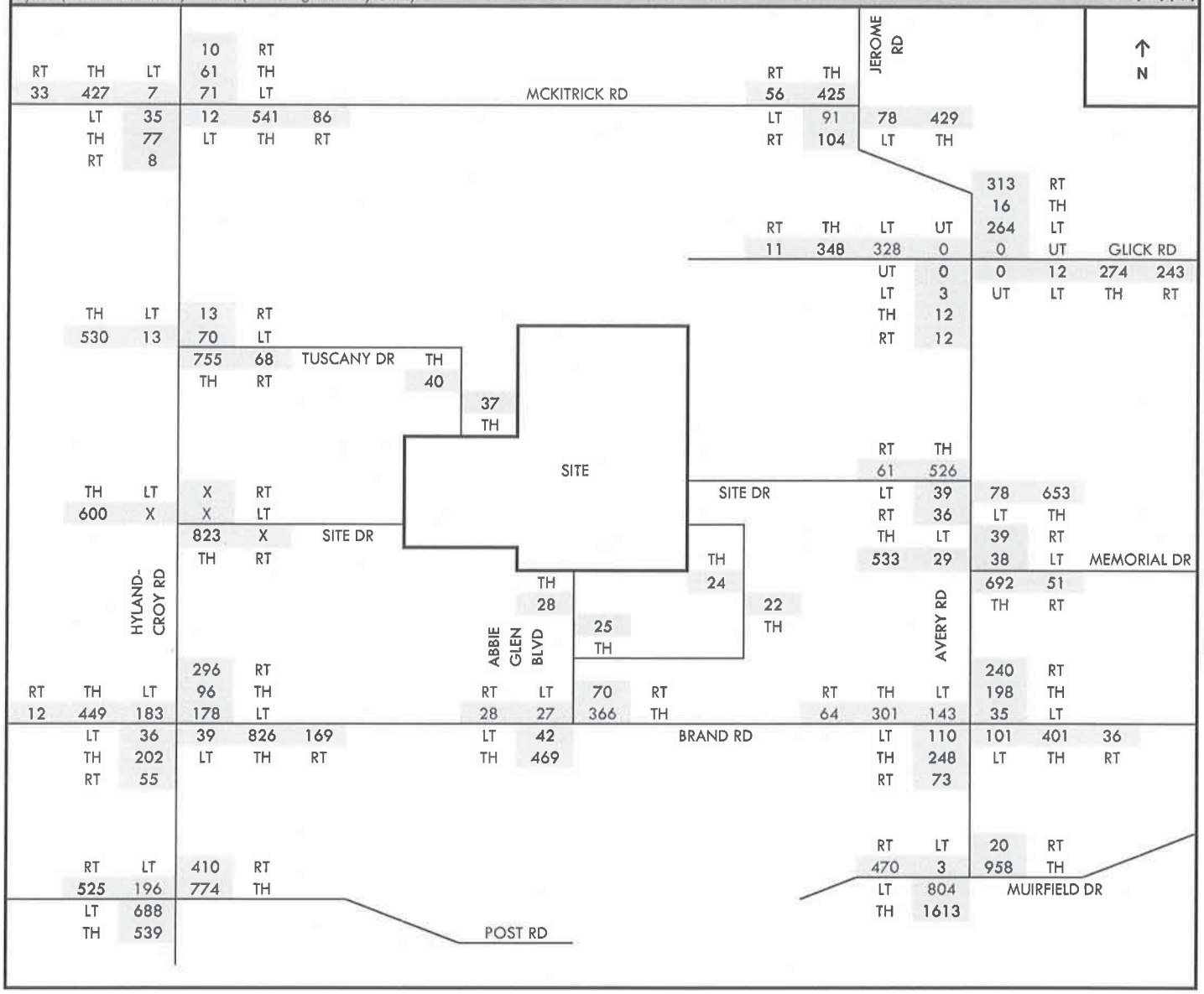

Riviera

Traffic Impact Study

Trip Generation Calculations

Institute of Transportation Engineers, 9th Edition

Land Use	Square Feet or Units	ITE Code	Time Period	ITE Formula	Total Trips	Trips Entering	Trips Exiting
Single Family - Detached	235	210	ADT	Ln(T)=0.92Ln(x)+2.72	2,306	1,153	1,153
	units		AM Peak	T=0.70(x)+9.74	174	44	130
			PM Peak	Ln(T)=0.90Ln(x)+0.51	227	143	84

TOTAL				***ADT***	***2,306***	***1,153***	***1,153***
				AM TOTAL	***174***	***44***	***130***
				PM TOTAL	***227***	***143***	***84***

Riviera
Traffic Impact Study
Traffic Volume Calculations

Total Site Trips - w/ Hyland-Croy Site Drive
(235 Single Family Units)

AM Peak Hour
G=G1+G2

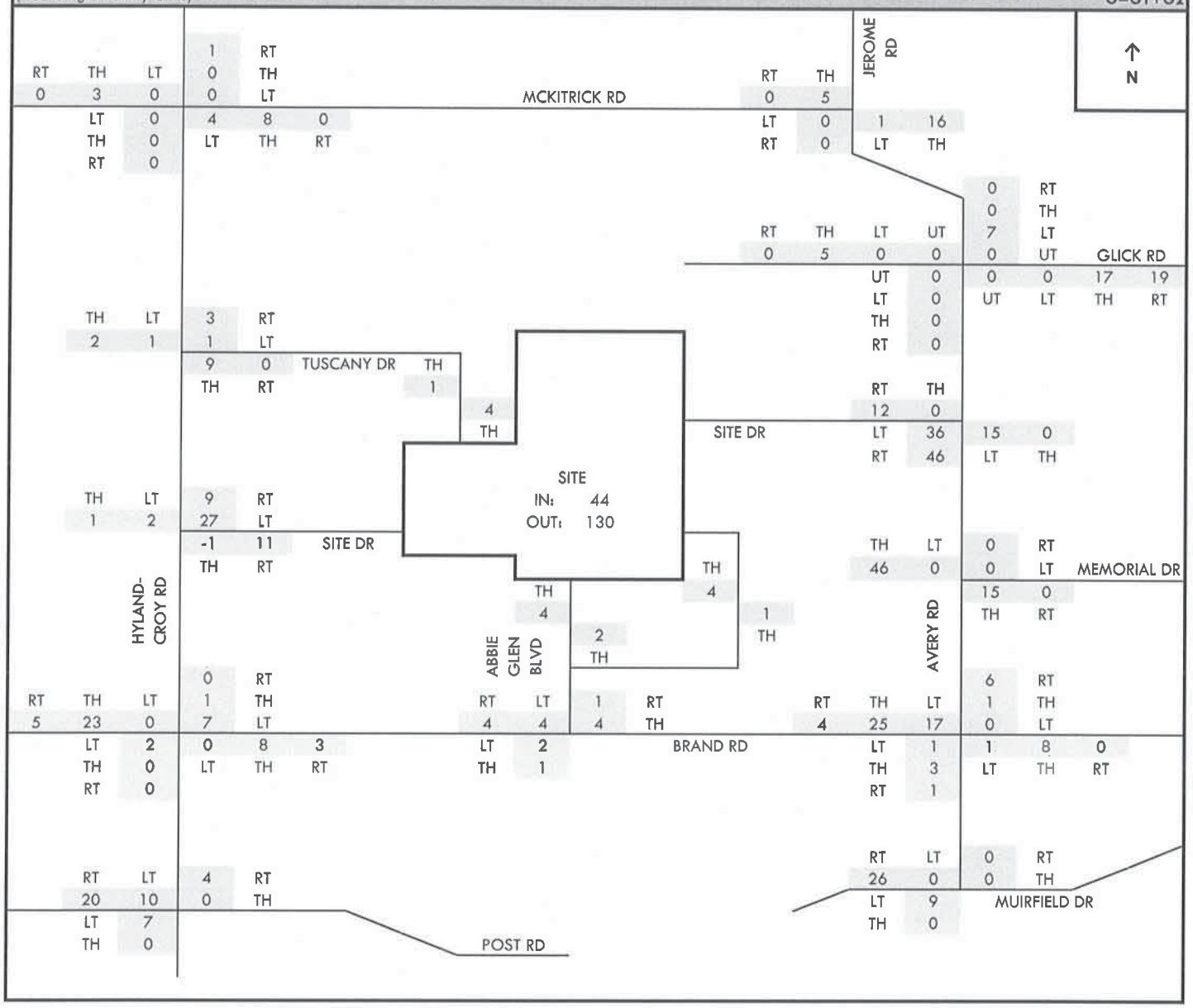

Riviera
Traffic Impact Study
Traffic Volume Calculations

Total Site Trips - w/o Hyland-Croy Site Drive — **AM Peak Hour**
(235 Single Family Units) — J=J1+J2

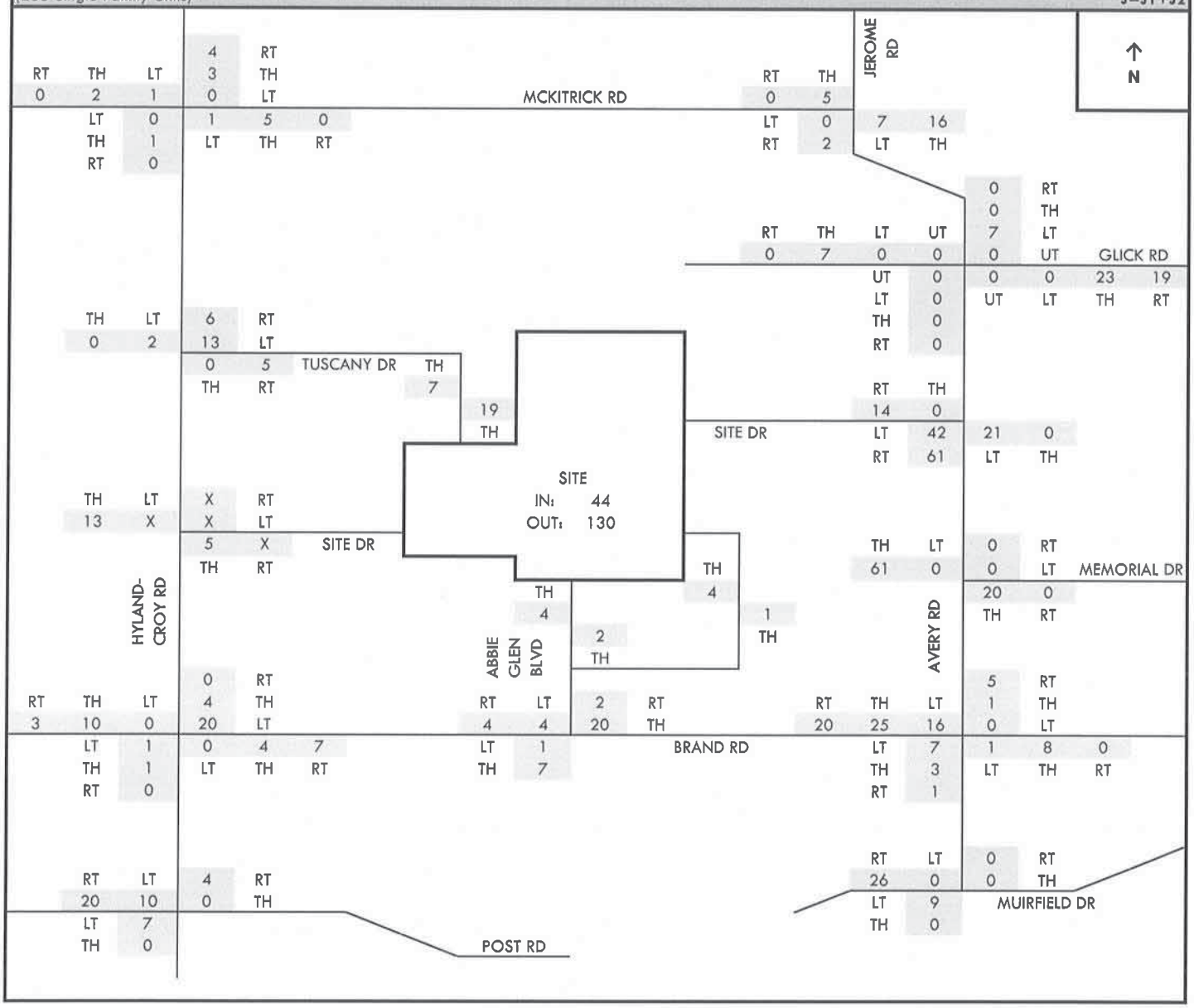

Riviera
Traffic Impact Study
Traffic Volume Calculations

2024 Full Build Traffic - w/ Hyland-Croy Site Drive — **AM Peak Hour**
w/ Proposed Elementary School (235 Single Family Units) — R=R1+P

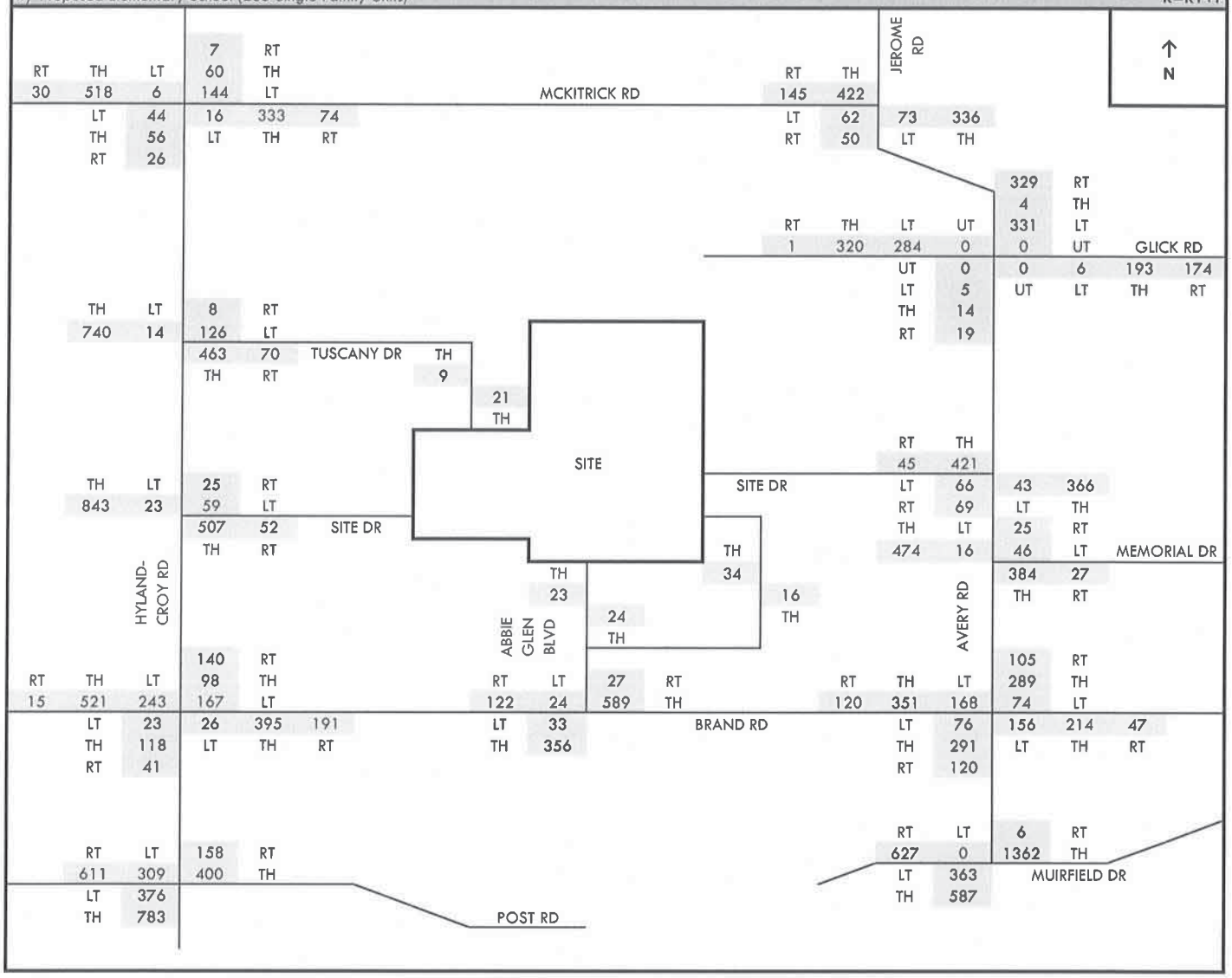

Riviera
Traffic Impact Study
Traffic Volume Calculations

2024 Full Build Traffic - w/o Hyland-Croy Site Drive — **AM Peak Hour**
w/ Proposed Elementary School (235 Single Family Units) — V=V1+T

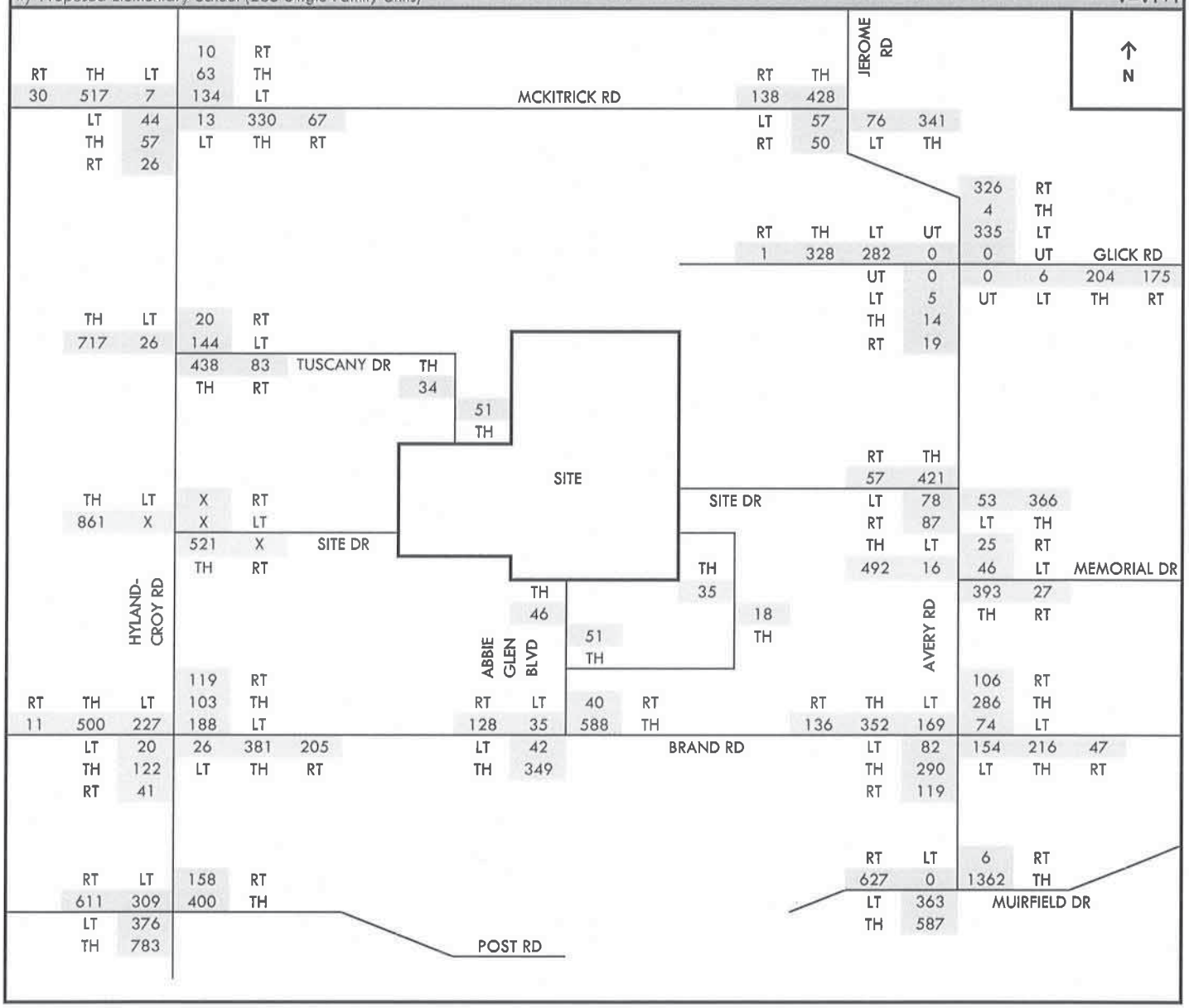

Riviera
Traffic Impact Study
Traffic Volume Calculations

Total Site Trips - w/ Hyland-Croy Site Drive
(235 Single Family Units)

PM Peak Hour
G=G1+G2

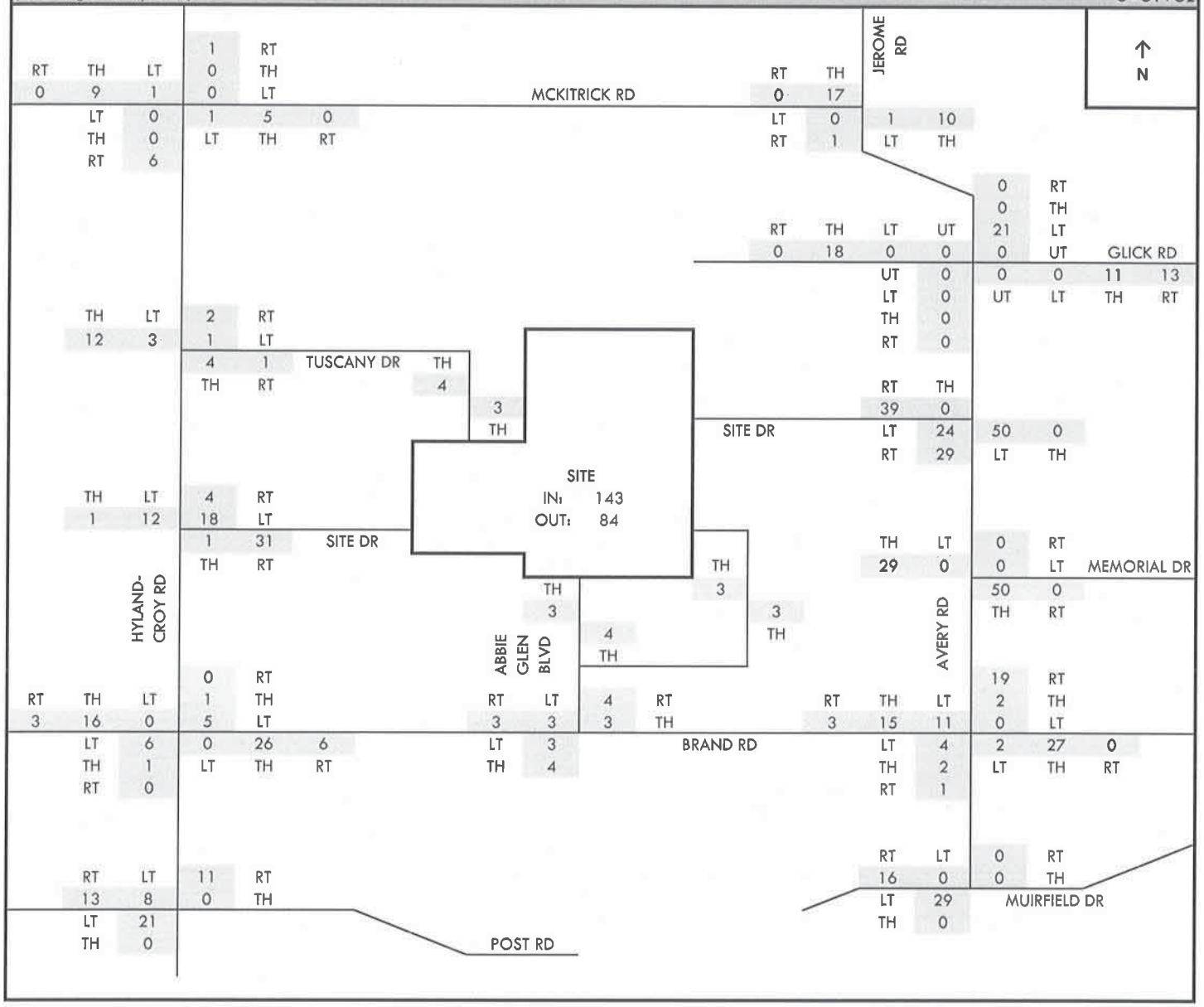

Riviera
Traffic Impact Study
Traffic Volume Calculations

Total Site Trips - w/o Hyland-Croy Site Drive **PM Peak Hour**
(235 Single Family Units) J=J1+J2

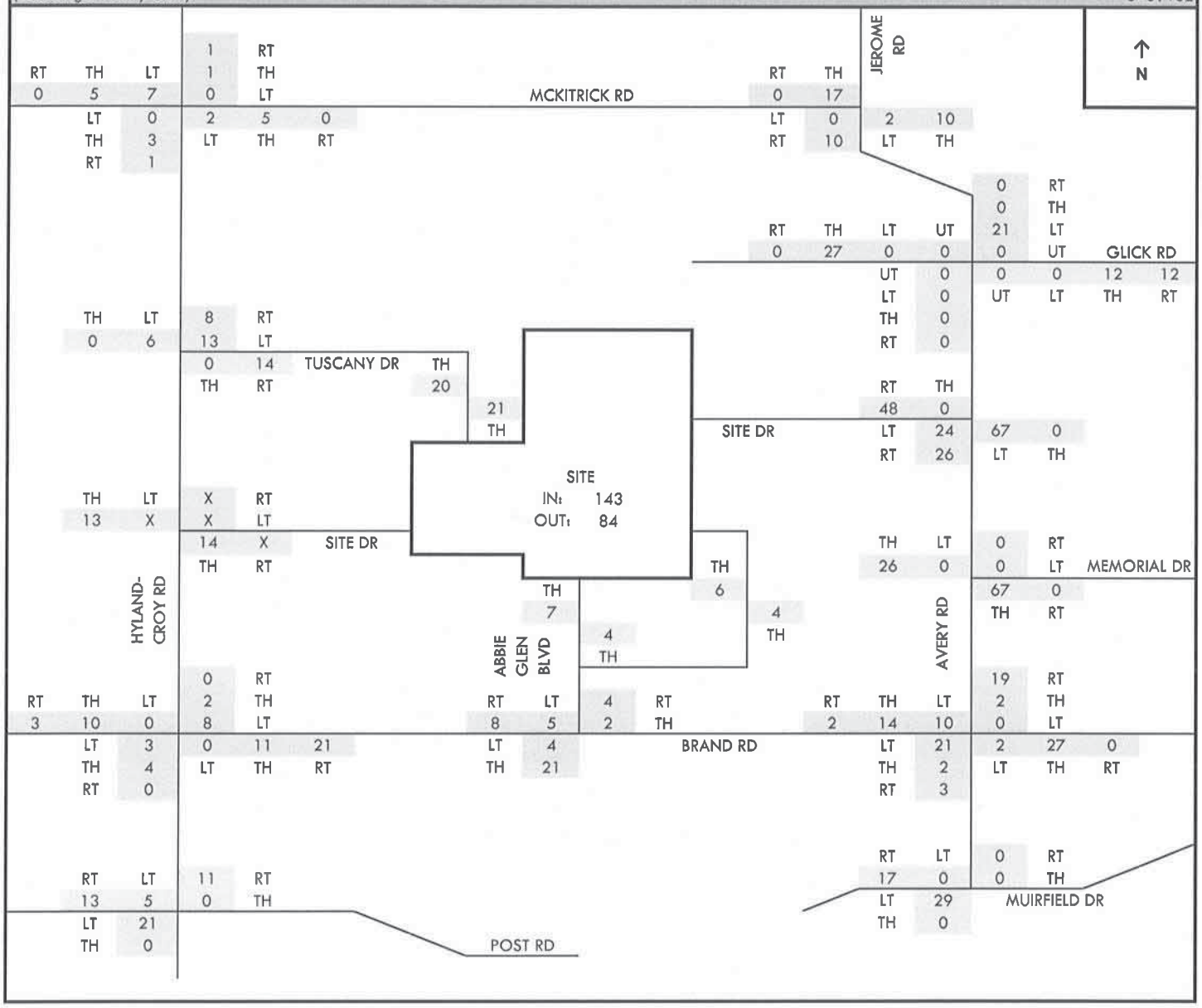

Riviera
Traffic Impact Study
Traffic Volume Calculations

2024 Full Build Traffic - w/ Hyland-Croy Site Drive — **PM Peak Hour**
w/ Proposed Elementary School (235 Single Family Units) — R=R1+P

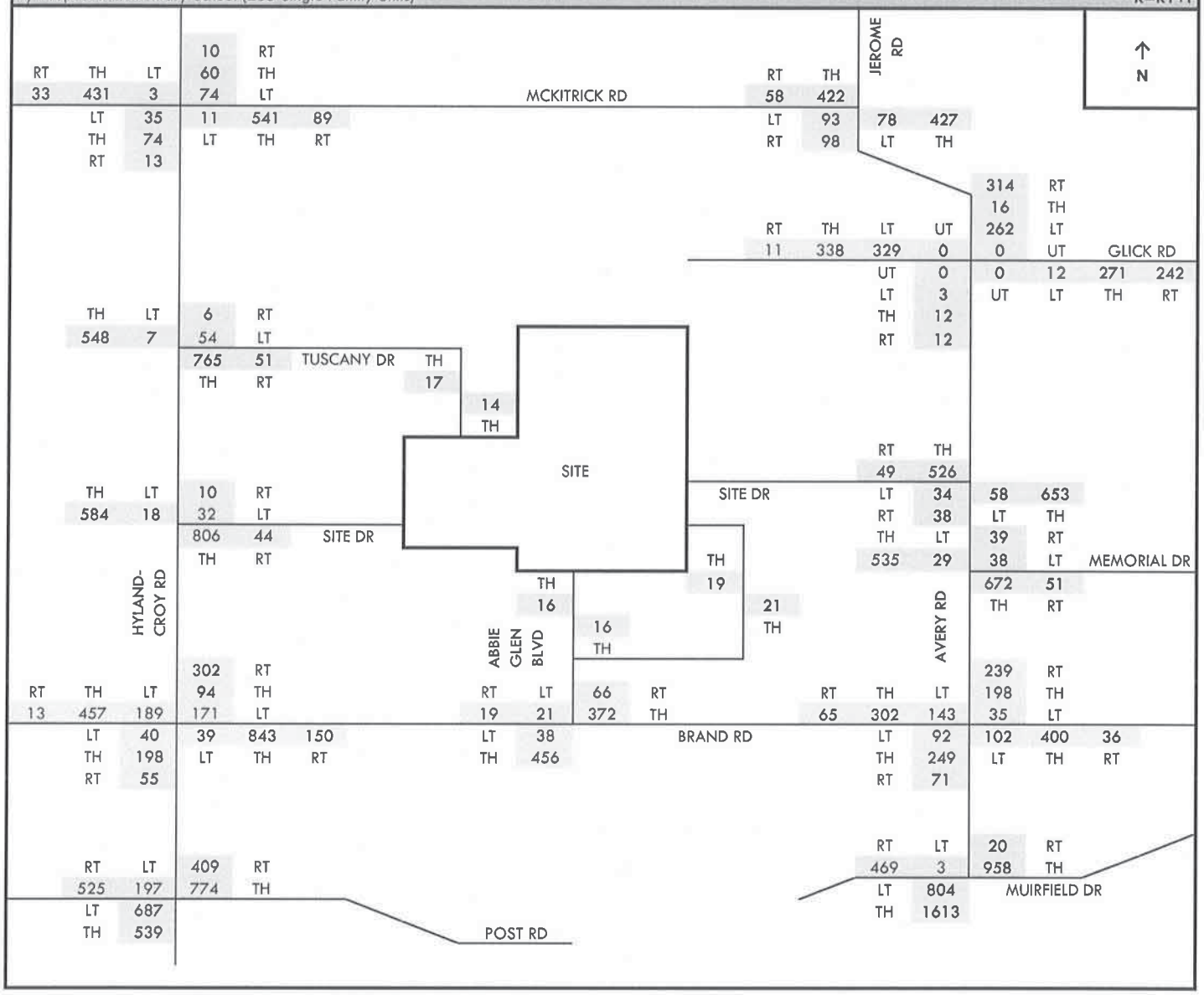

Riviera
Traffic Impact Study
Traffic Volume Calculations

2024 Full Build Traffic - w/o Hyland-Croy Site Drive — **PM Peak Hour**
w/ Proposed Elementary School (235 Single Family Units) — V=V1+T

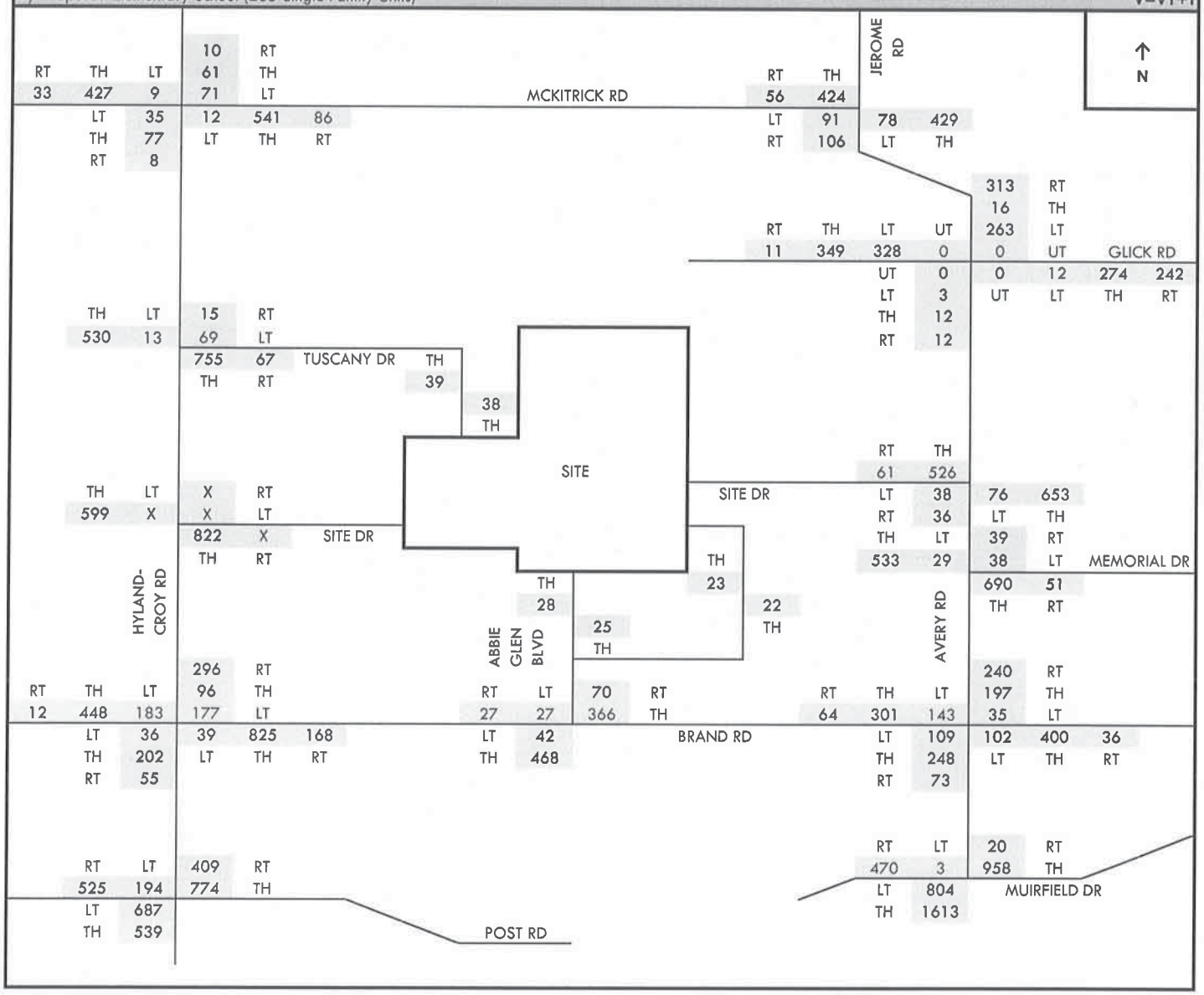

Riviera

Traffic Impact Study

Trip Generation Calculations

Institute of Transportation Engineers, 9th Edition

Land Use	Square Feet or Units	ITE Code	Time Period	ITE Formula	Total Trips	Trips Entering	Trips Exiting
Single Family - Detached	230	210	ADT	Ln(T)=0.92Ln(x)+2.72	2,260	1,130	1,130
	units		AM Peak	T=0.70(x)+9.74	171	43	128
			PM Peak	Ln(T)=0.90Ln(x)+0.51	222	140	82

TOTAL				***ADT***	***2,260***	***1,130***	***1,130***
				AM TOTAL	***171***	***43***	***128***
				PM TOTAL	***222***	***140***	***82***

Riviera
Traffic Impact Study
Traffic Volume Calculations

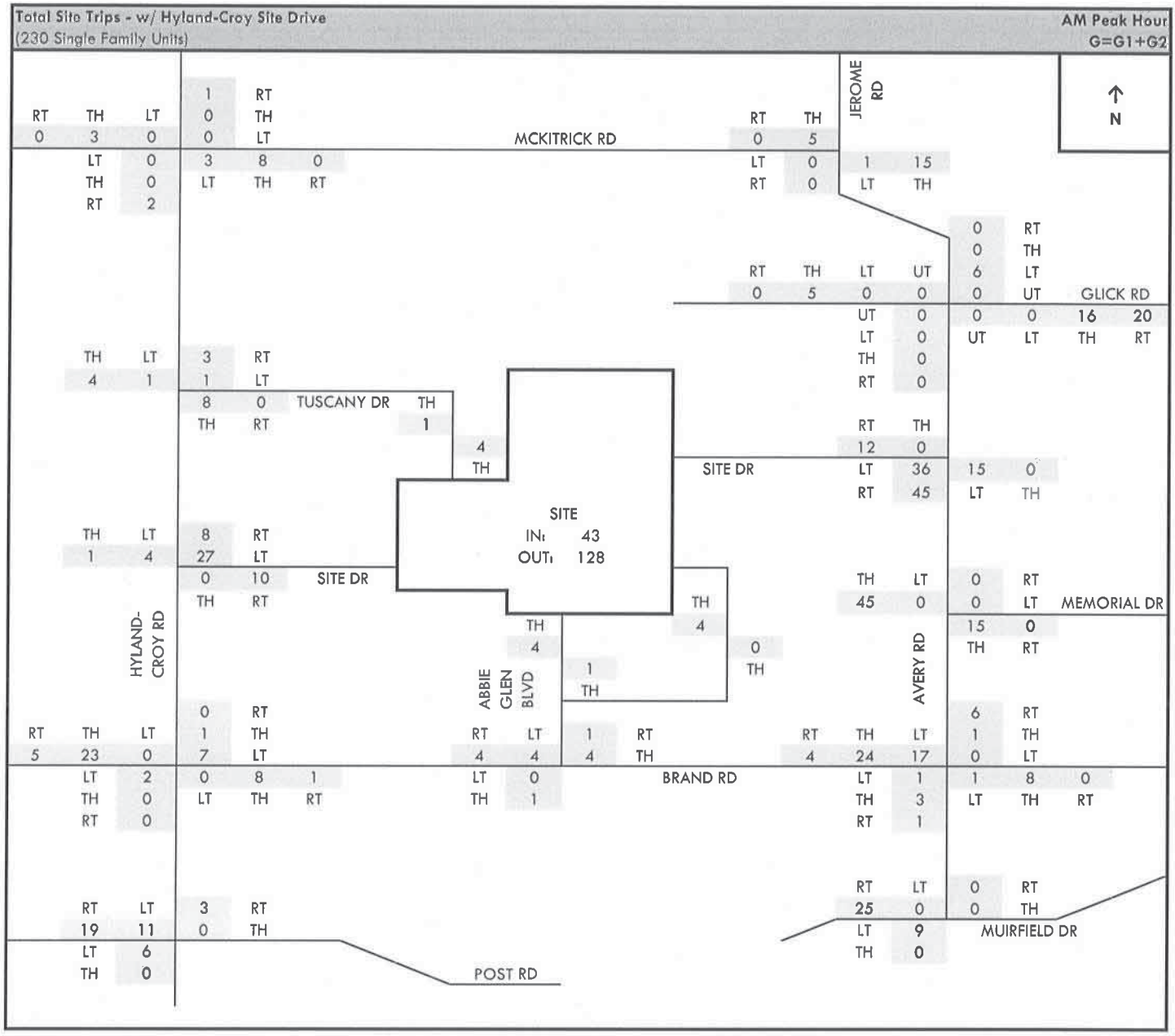

Rivlera
Traffic Impact Study
Traffic Volume Calculations

Total Site Trips - w/o Hyland-Croy Site Drive
(230 Single Family Units)

AM Peak Hour
J=J1+J2

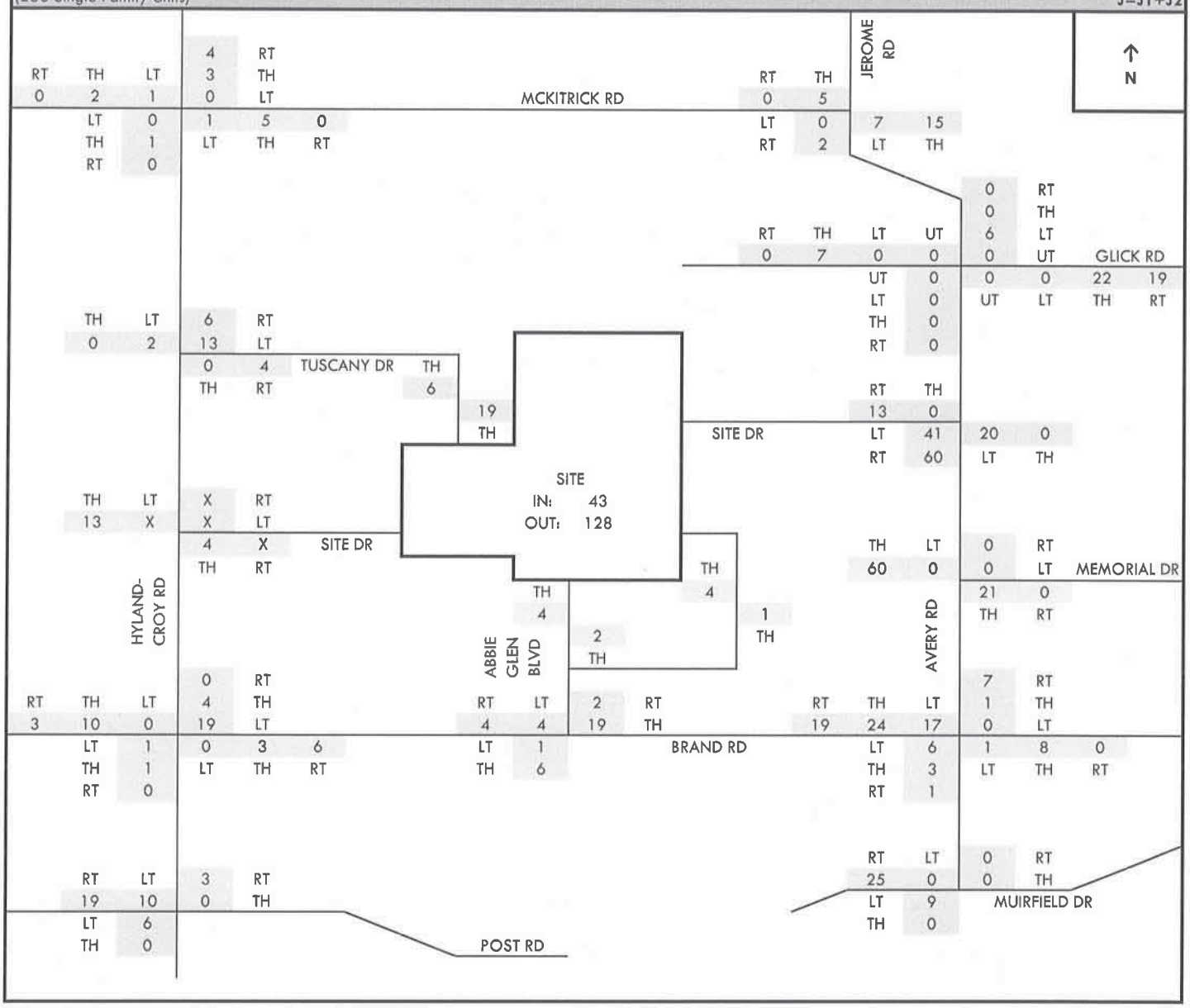

Riviera
Traffic Impact Study
Traffic Volume Calculations

2024 Full Build Traffic - w/ Hyland-Croy Site Drive — **AM Peak Hour**
w/ Proposed Elementary School (230 Single Family Units) — **R=R1+P**

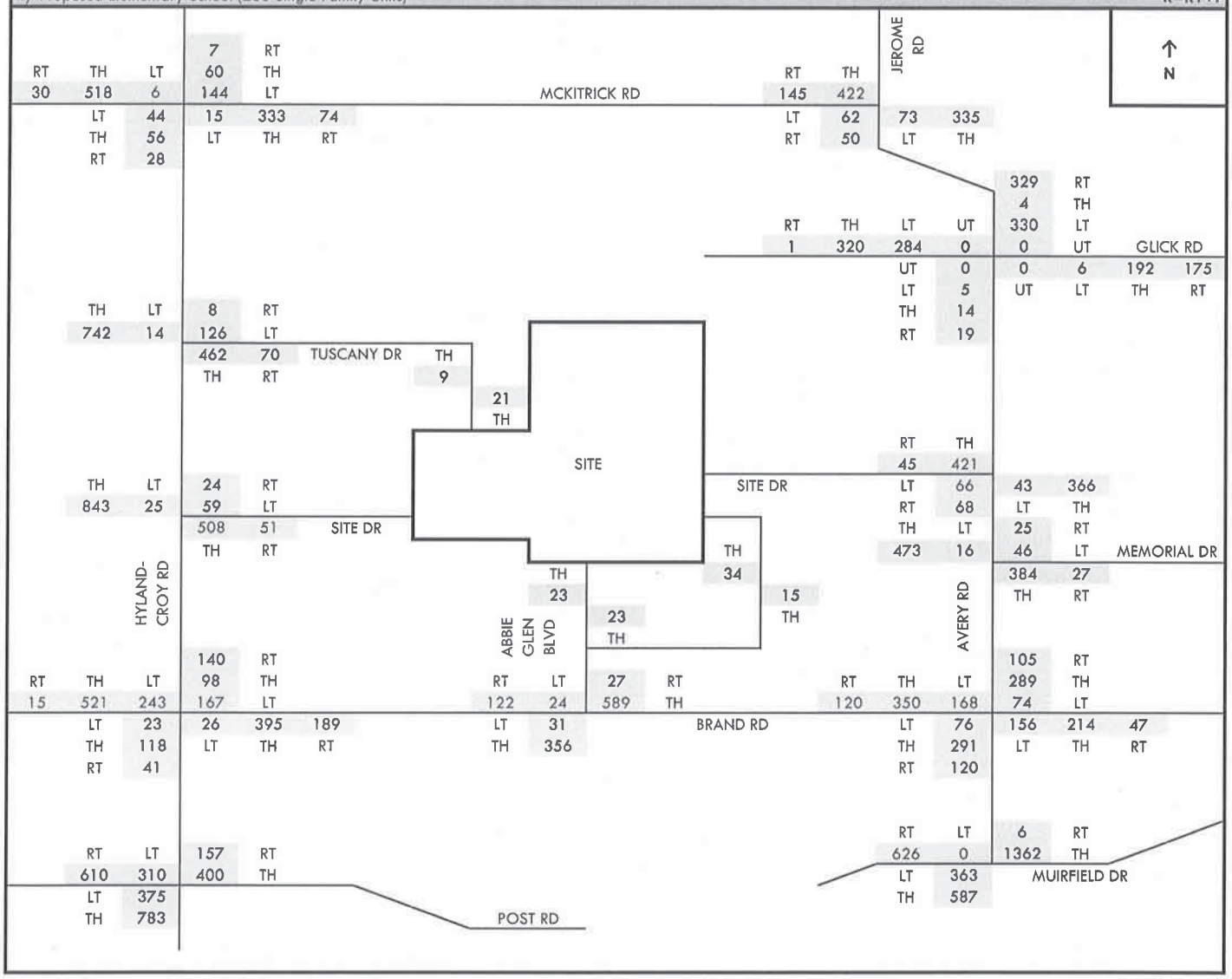

Riviera
Traffic Impact Study
Traffic Volume Calculations

2024 Full Build Traffic - w/o Hyland-Croy Site Drive — **AM Peak Hour**
w/ Proposed Elementary School (230 Single Family Units) — V=V1+T

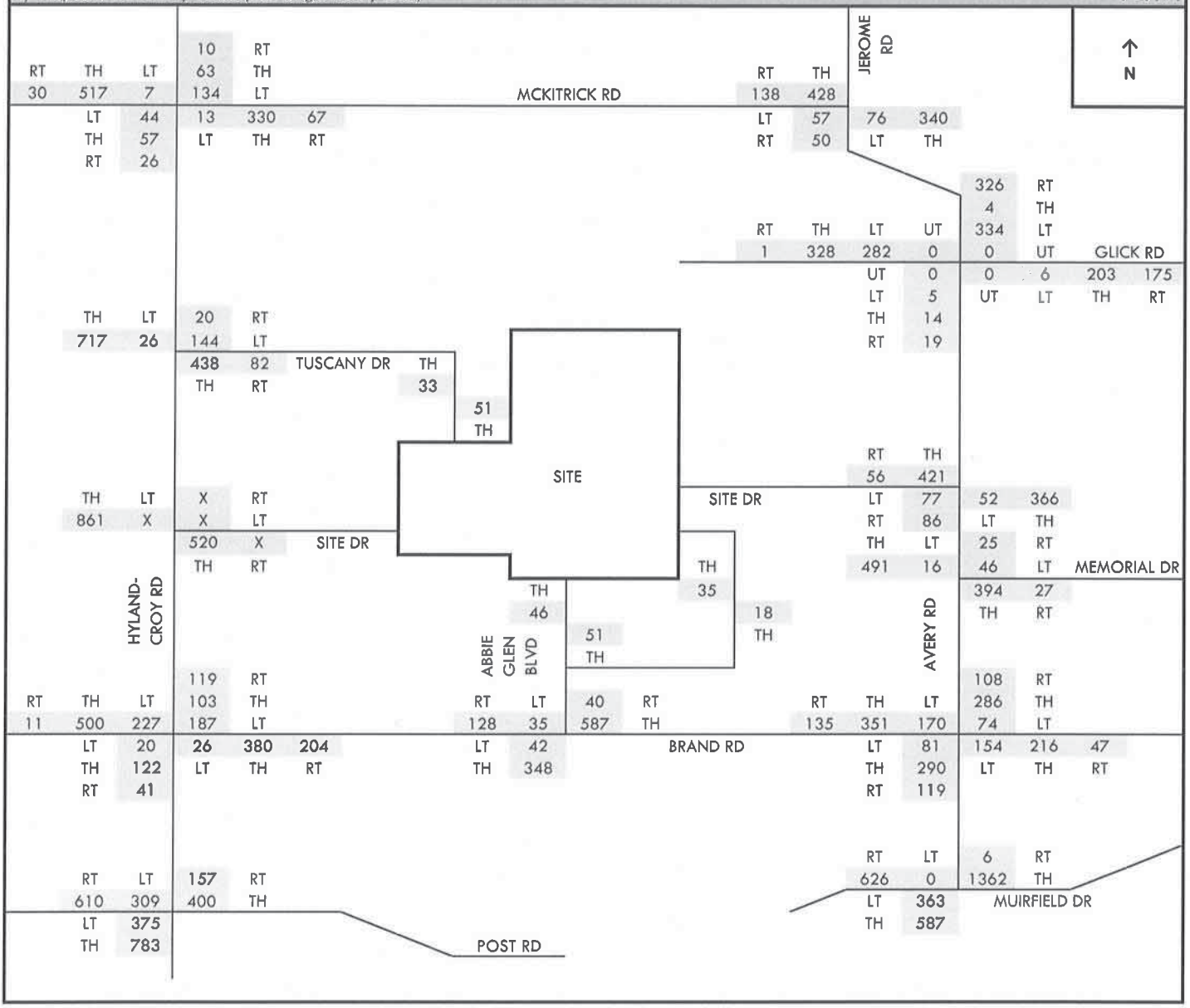

Riviera
Traffic Impact Study
Traffic Volume Calculations

Total Site Trips - w/ Hyland-Croy Site Drive
(230 Single Family Units)

PM Peak Hour
G=G1+G2

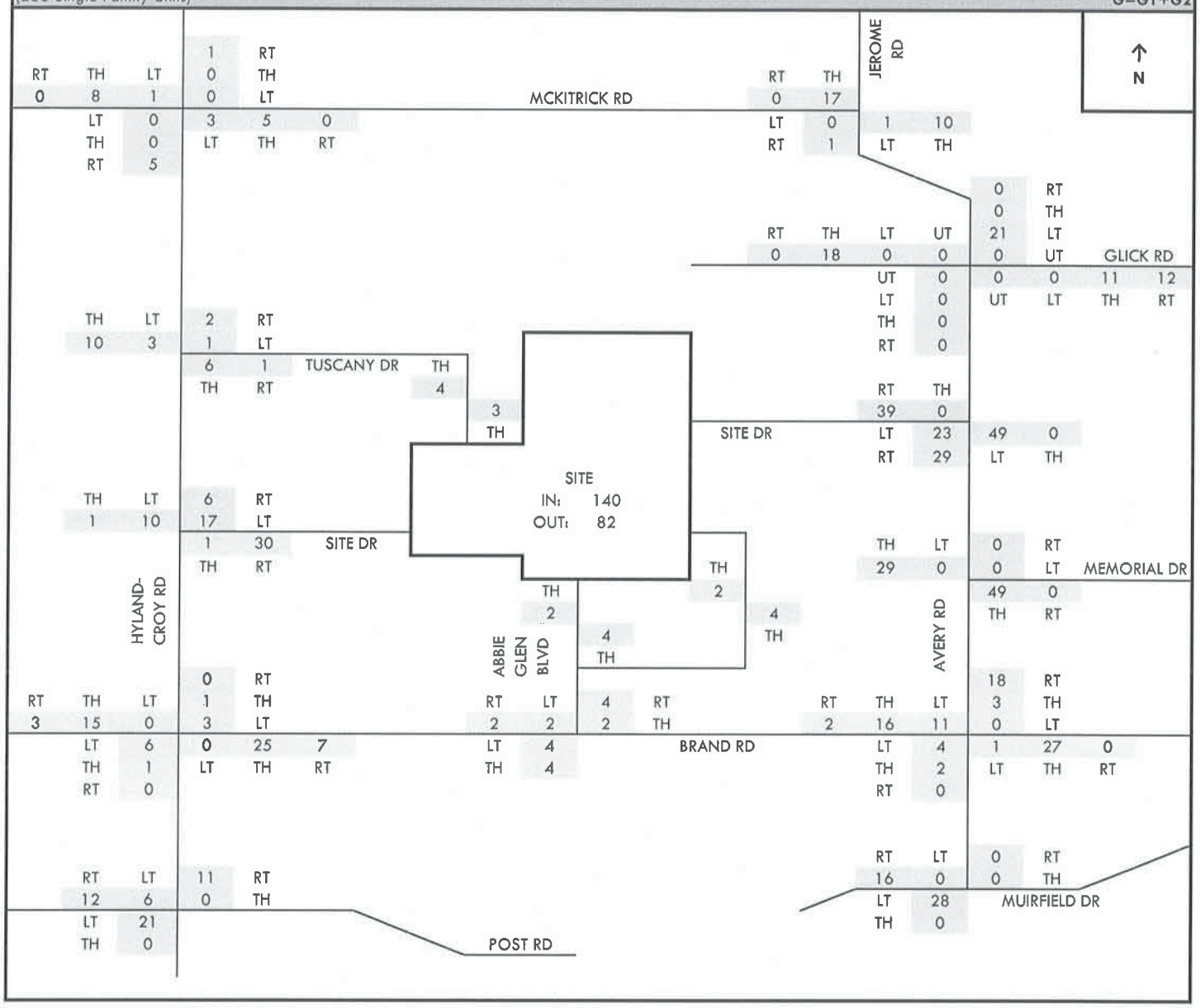

Riviera
Traffic Impact Study
Traffic Volume Calculations

Total Site Trips - w/o Hyland-Croy Site Drive
(230 Single Family Units)

PM Peak Hour
J=J1+J2

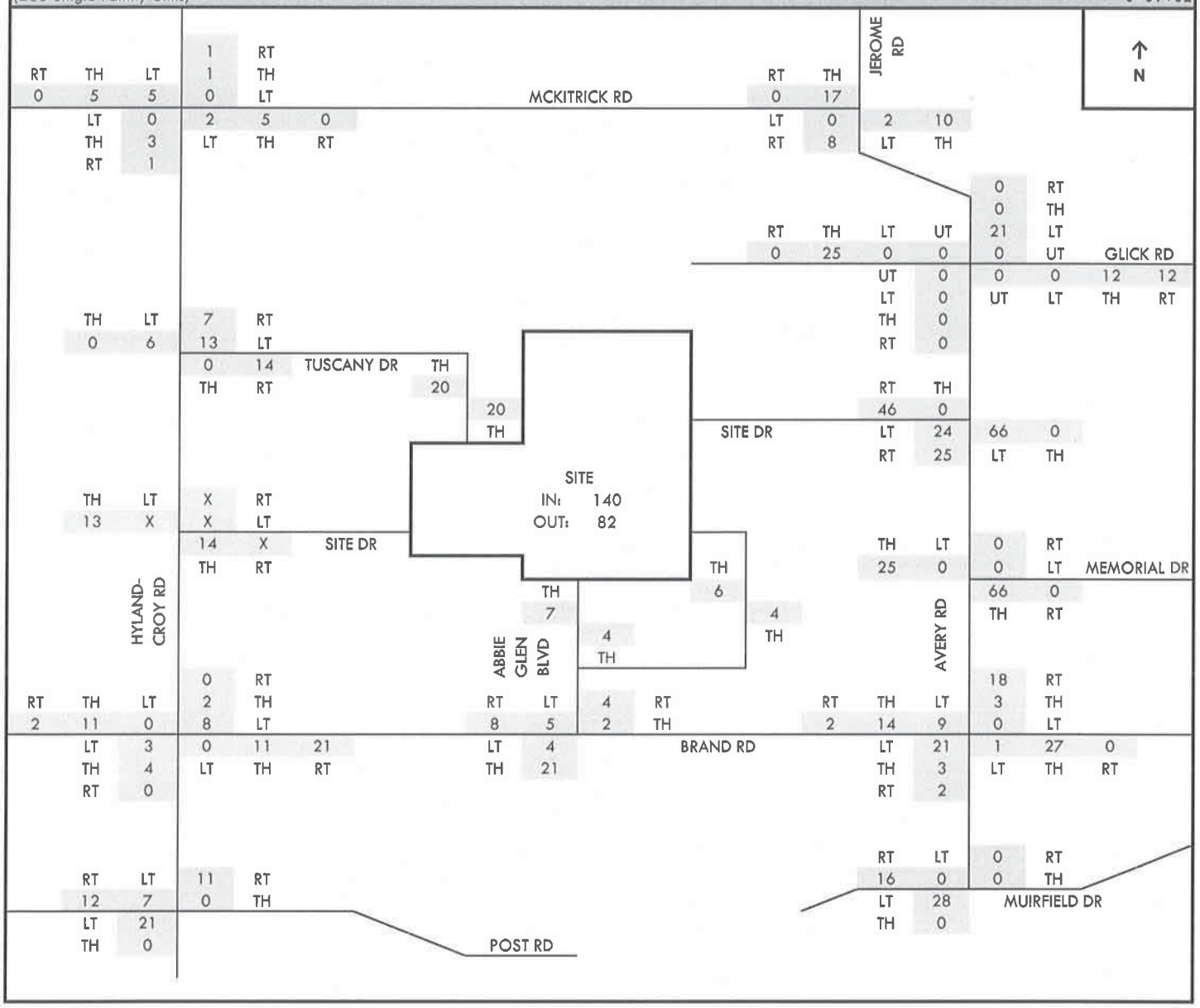

Riviera
Traffic Impact Study
Traffic Volume Calculations

2024 Full Build Traffic - w/ Hyland-Croy Site Drive — **PM Peak Hour**
w/ Proposed Elementary School (230 Single Family Units) — R=R1+P

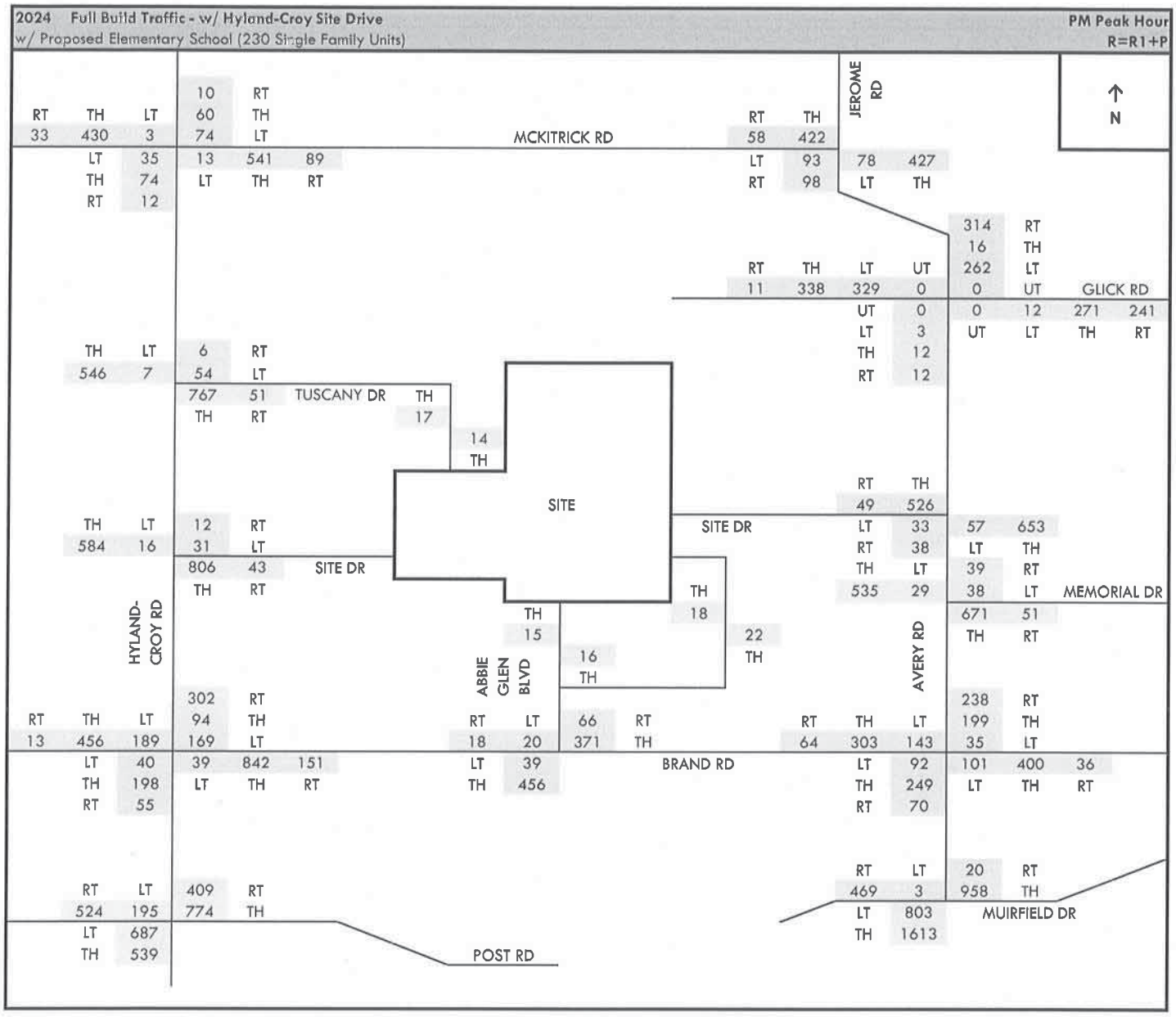

Riviera
Traffic Impact Study
Traffic Volume Calculations

2024 Full Build Traffic - w/o Hyland-Croy Site Drive — **PM Peak Hour**
w/ Proposed Elementary School (230 Single Family Units) — V=V1+T

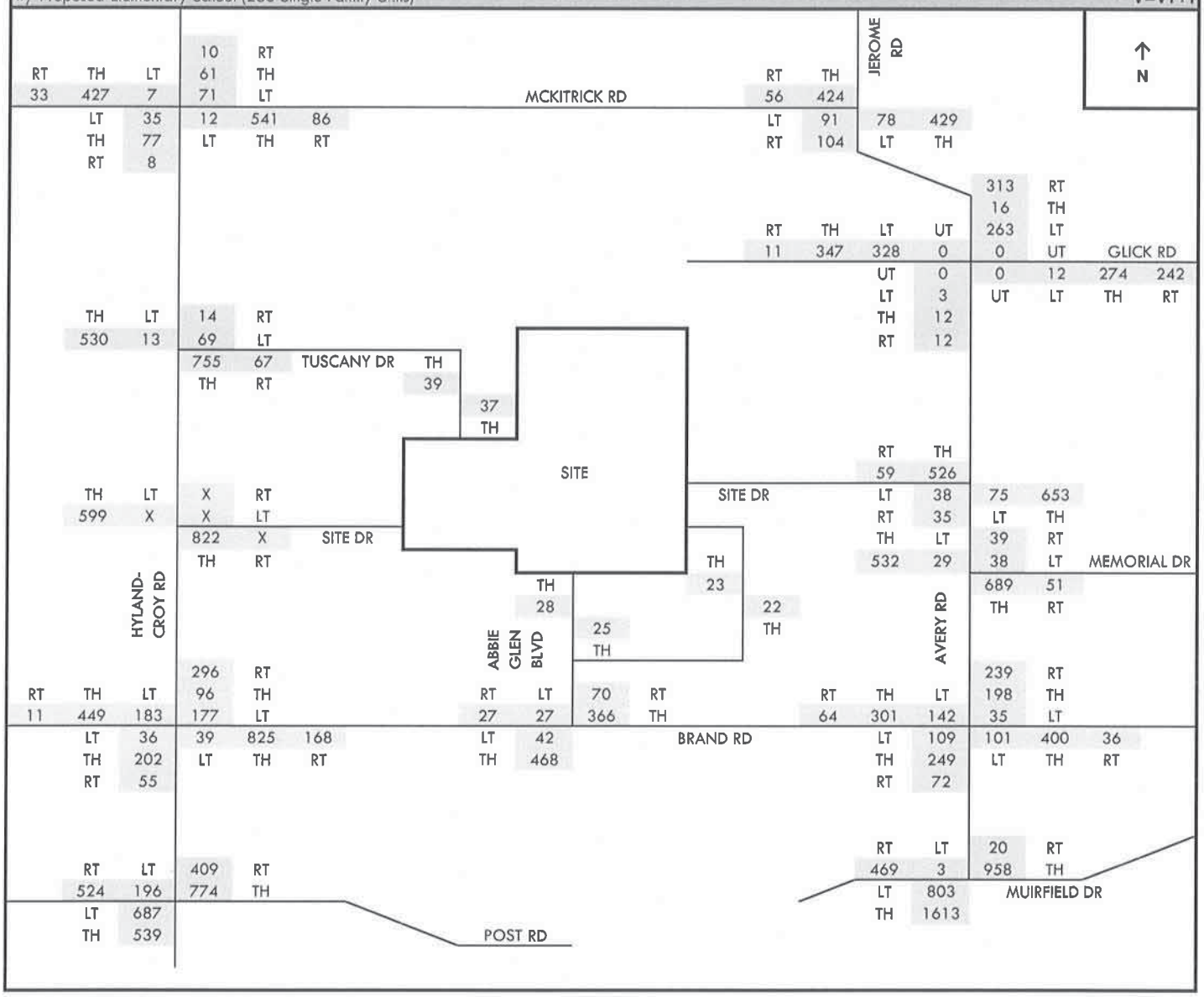

Riviera

Traffic Impact Study

Trip Generation Calculations

Institute of Transportation Engineers, 9th Edition

Land Use	Square Feet or Units	ITE Code	Time Period	ITE Formula	Total Trips	Trips Entering	Trips Exiting
Single Family - Detached	225	210	ADT	Ln(T)=0.92Ln(x)+2.72	2,216	1,108	1,108
	units		AM Peak	T=0.70(x)+9.74	167	42	125
			PM Peak	Ln(T)=0.90Ln(x)+0.51	218	137	81
TOTAL				***ADT***	***2,216***	***1,108***	***1,108***
				AM TOTAL	***167***	***42***	***125***
				PM TOTAL	***218***	***137***	***81***

Riviera
Traffic Impact Study
Traffic Volume Calculations

Total Site Trips - w/ Hyland-Croy Site Drive **AM Peak Hour**
(225 Single Family Units) **G=G1+G2**

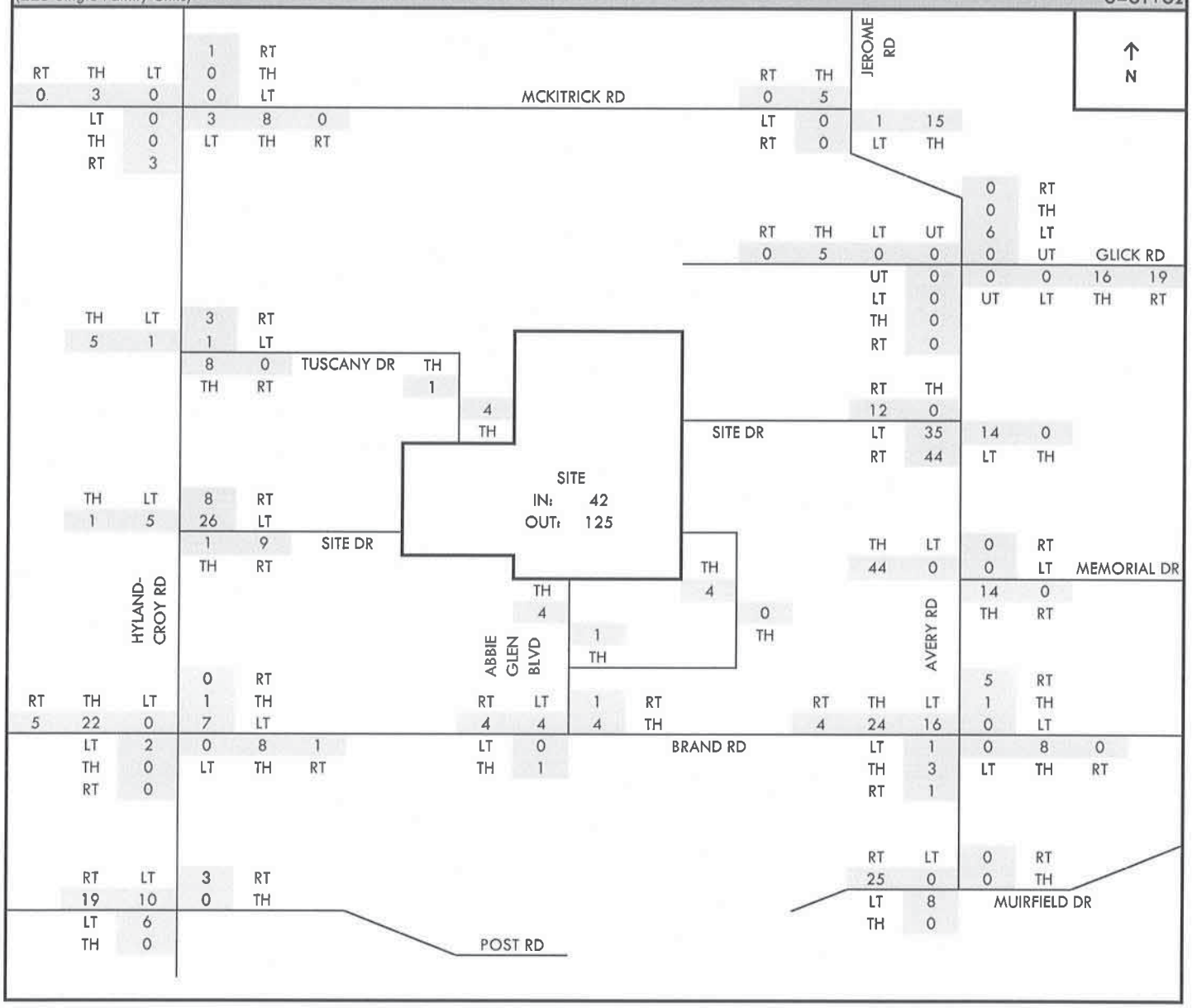

Riviera
Traffic Impact Study
Traffic Volume Calculations

Total Site Trips - w/o Hyland-Croy Site Drive
(225 Single Family Units)

AM Peak Hour
J=J1+J2

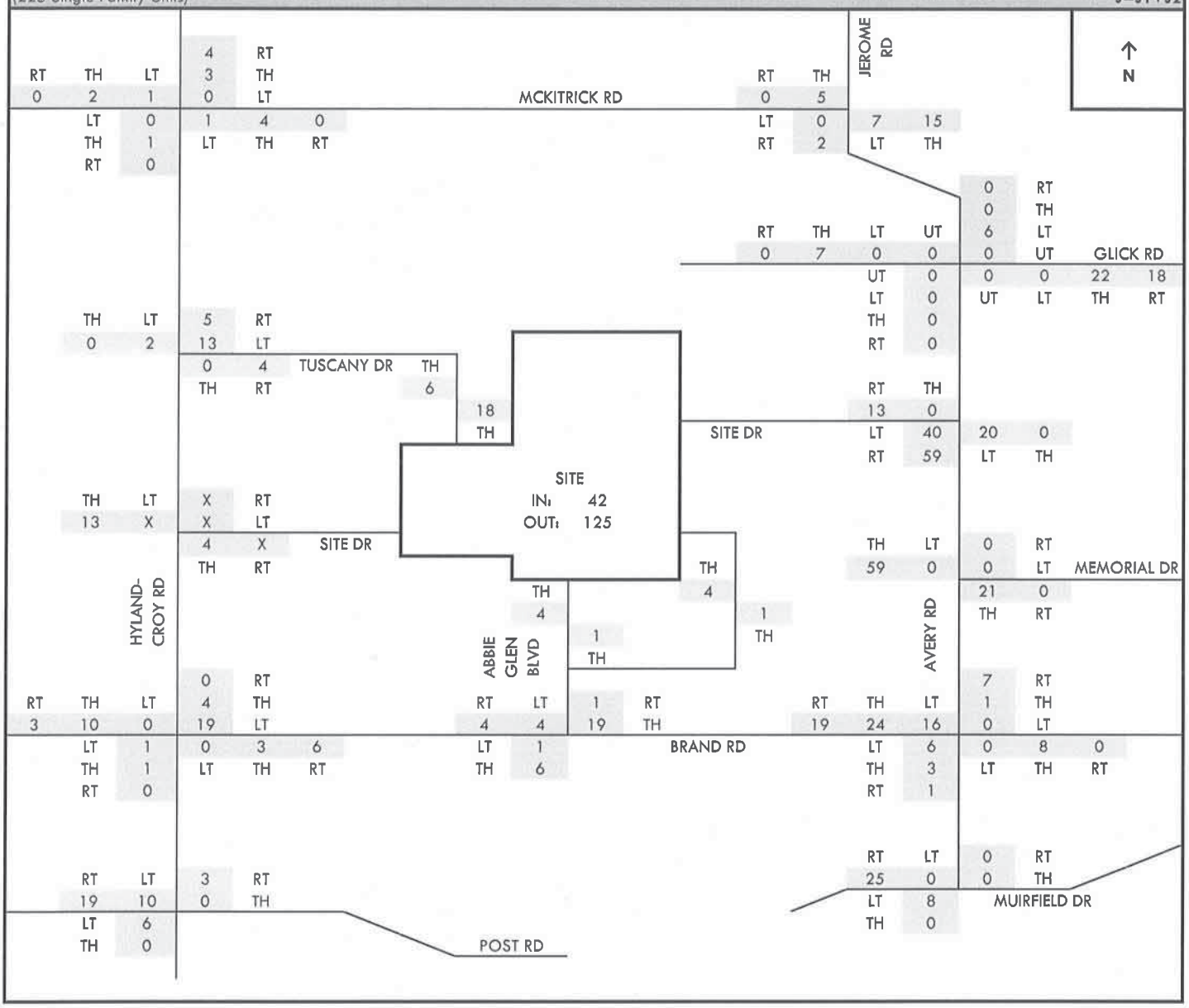

Riviera
Traffic Impact Study
Traffic Volume Calculations

2024 Full Build Traffic - w/ Hyland-Croy Site Drive
w/ Proposed Elementary School (225 Single Family Units)

AM Peak Hour
R=R1+P

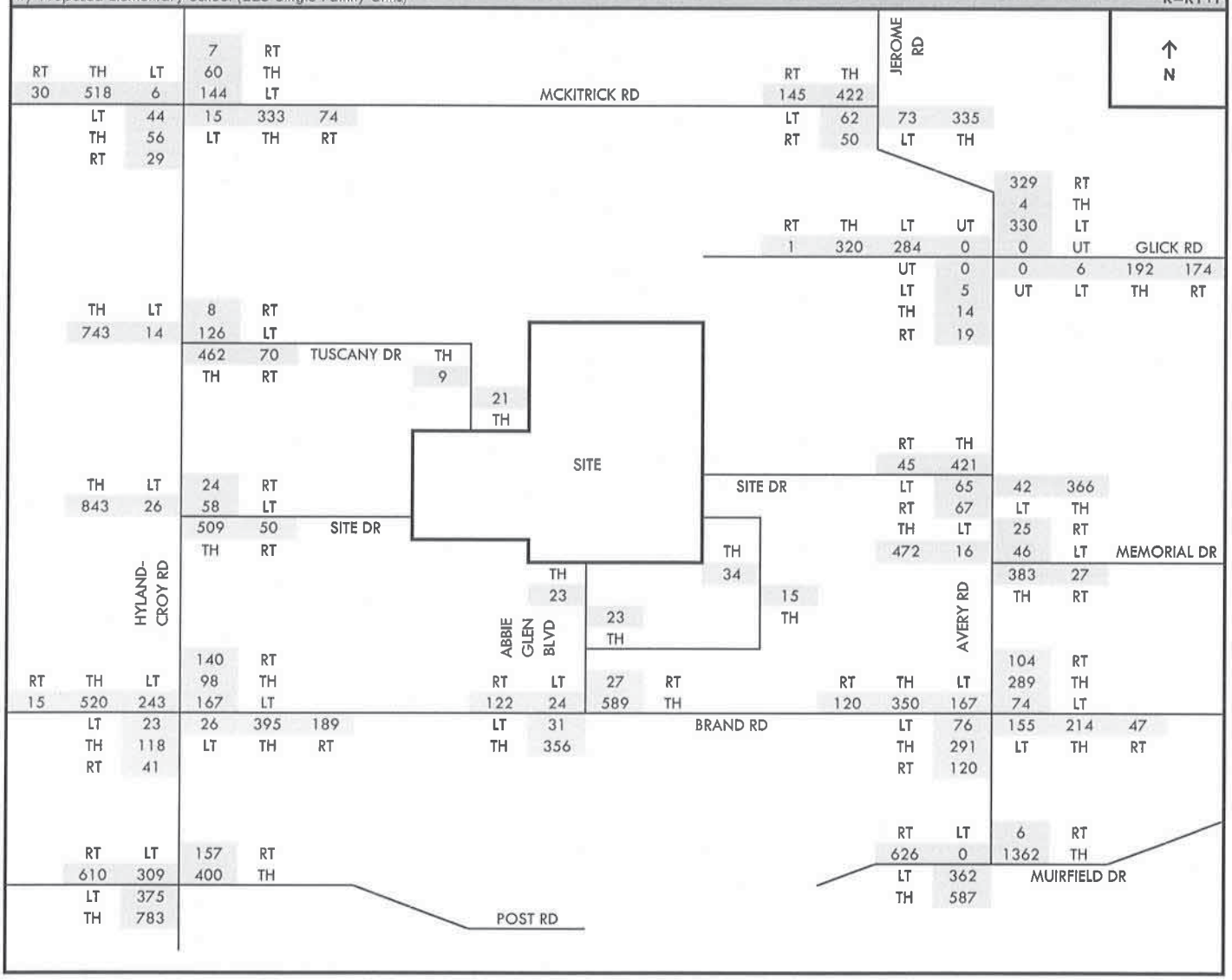

Riviera
Traffic Impact Study
Traffic Volume Calculations

2024 Full Build Traffic - w/o Hyland-Croy Site Drive — **AM Peak Hour**
w/ Proposed Elementary School (225 Single Family Units) — V=V1+T

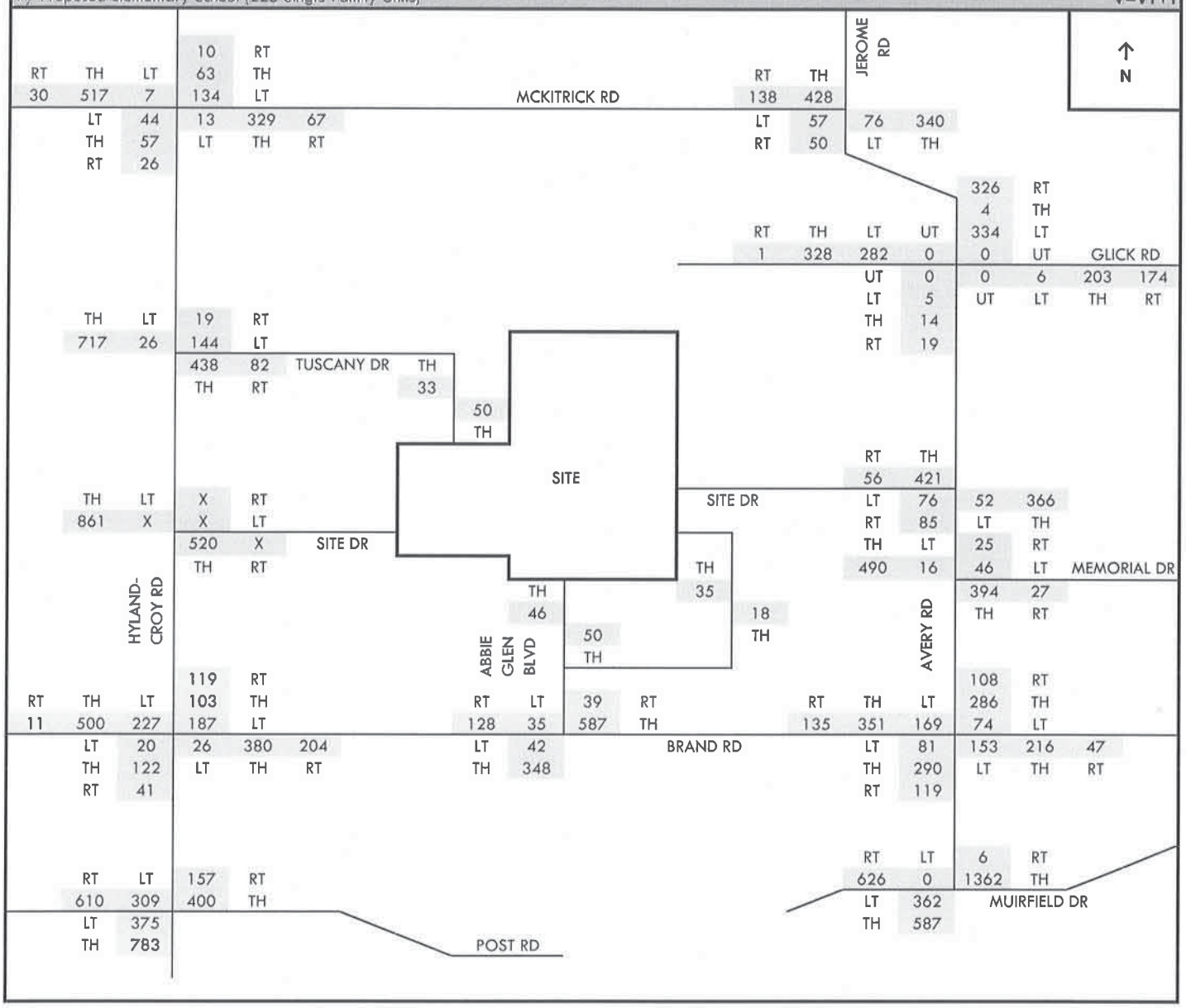

Riviera
Traffic Impact Study
Traffic Volume Calculations

Total Site Trips - w/ Hyland-Croy Site Drive (225 Single Family Units) — **PM Peak Hour G=G1+G2**

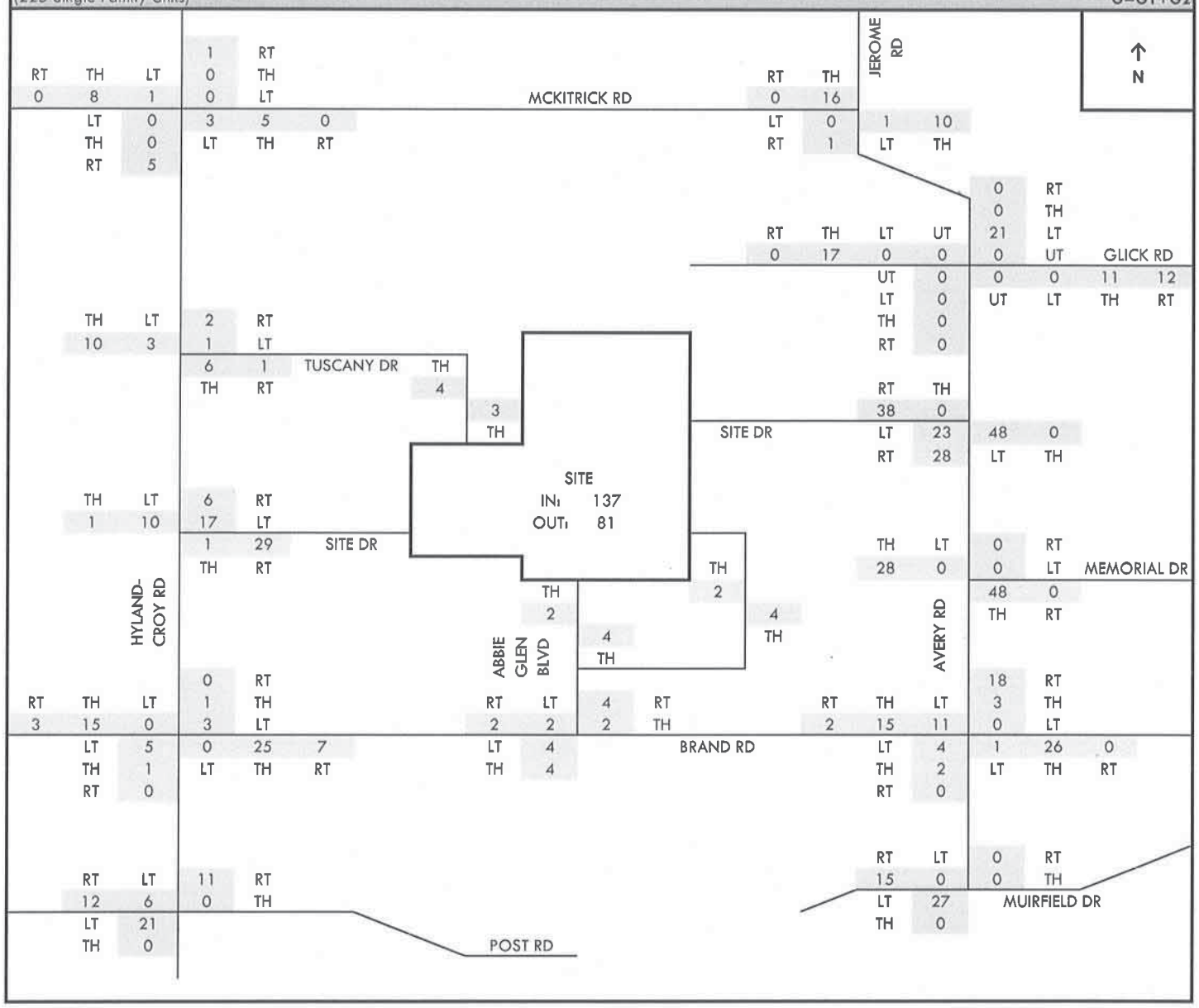

Riviera
Traffic Impact Study
Traffic Volume Calculations

Total Site Trips - w/o Hyland-Croy Site Drive **PM Peak Hour**
(225 Single Family Units) J=J1+J2

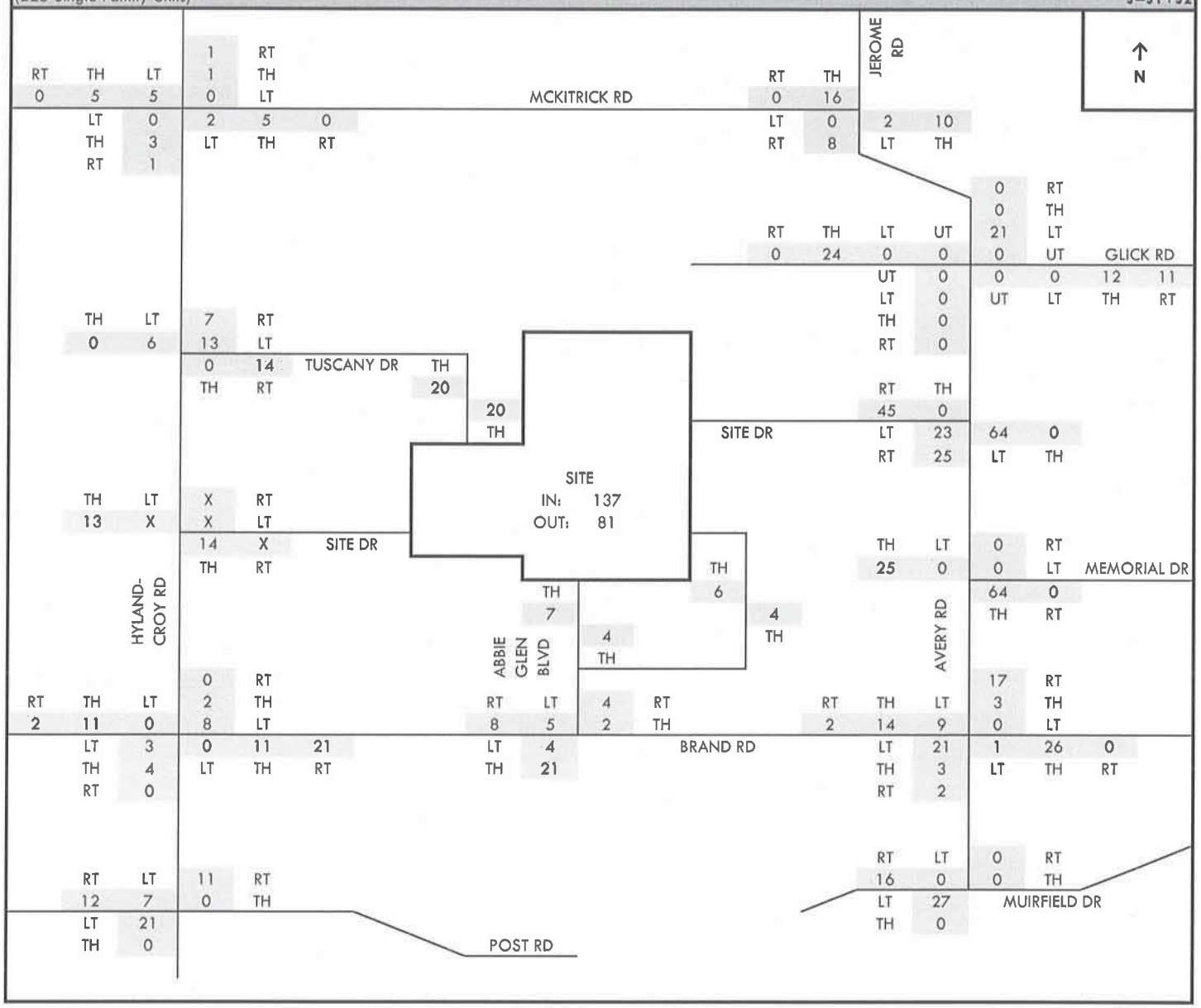

Riviera
Traffic Impact Study
Traffic Volume Calculations

2024 Full Build Traffic - w/ Hyland-Croy Site Drive — **PM Peak Hour**
w/ Proposed Elementary School (225 Single Family Units) — **R=R1+P**

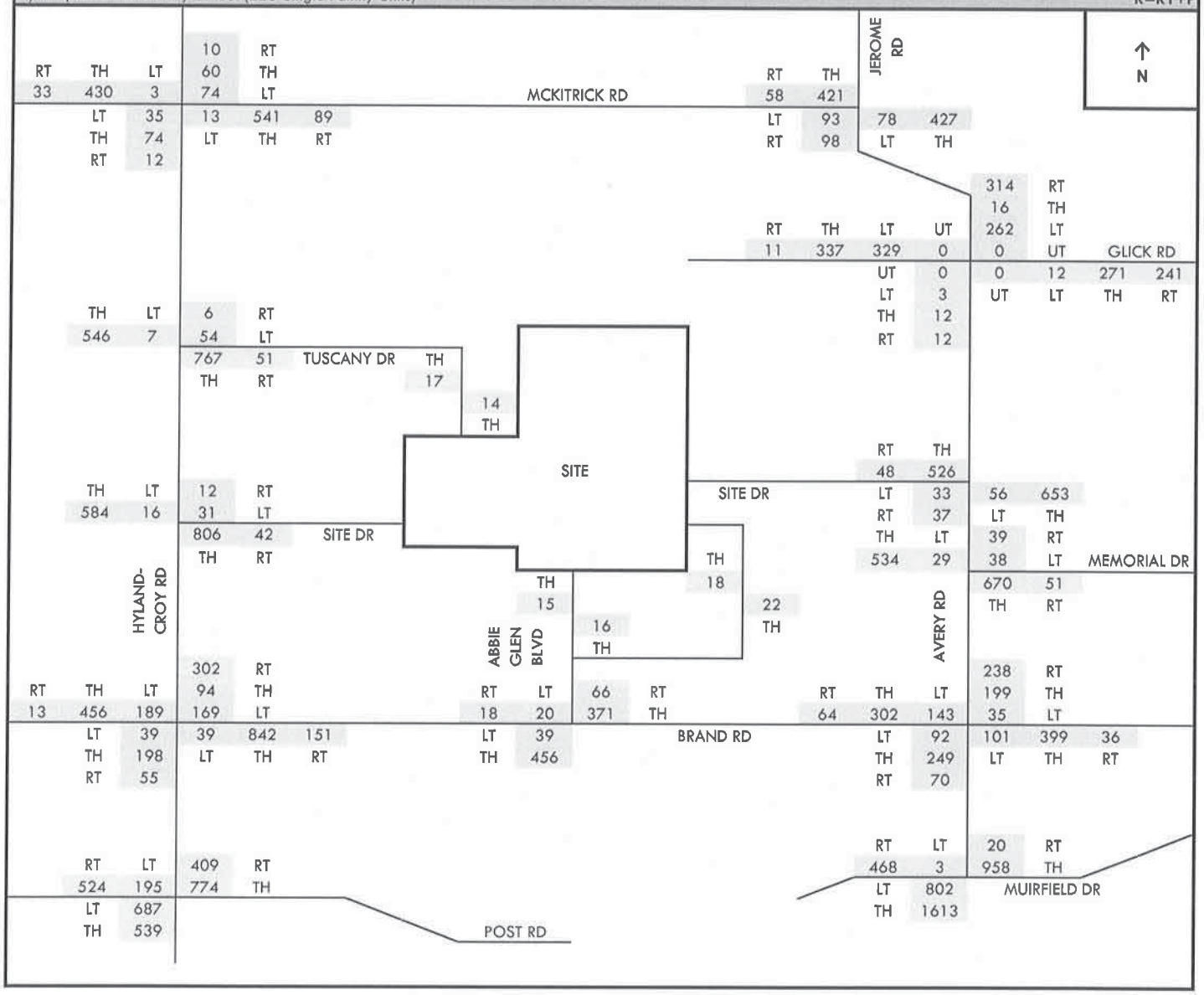

Riviera
Traffic Impact Study
Traffic Volume Calculations
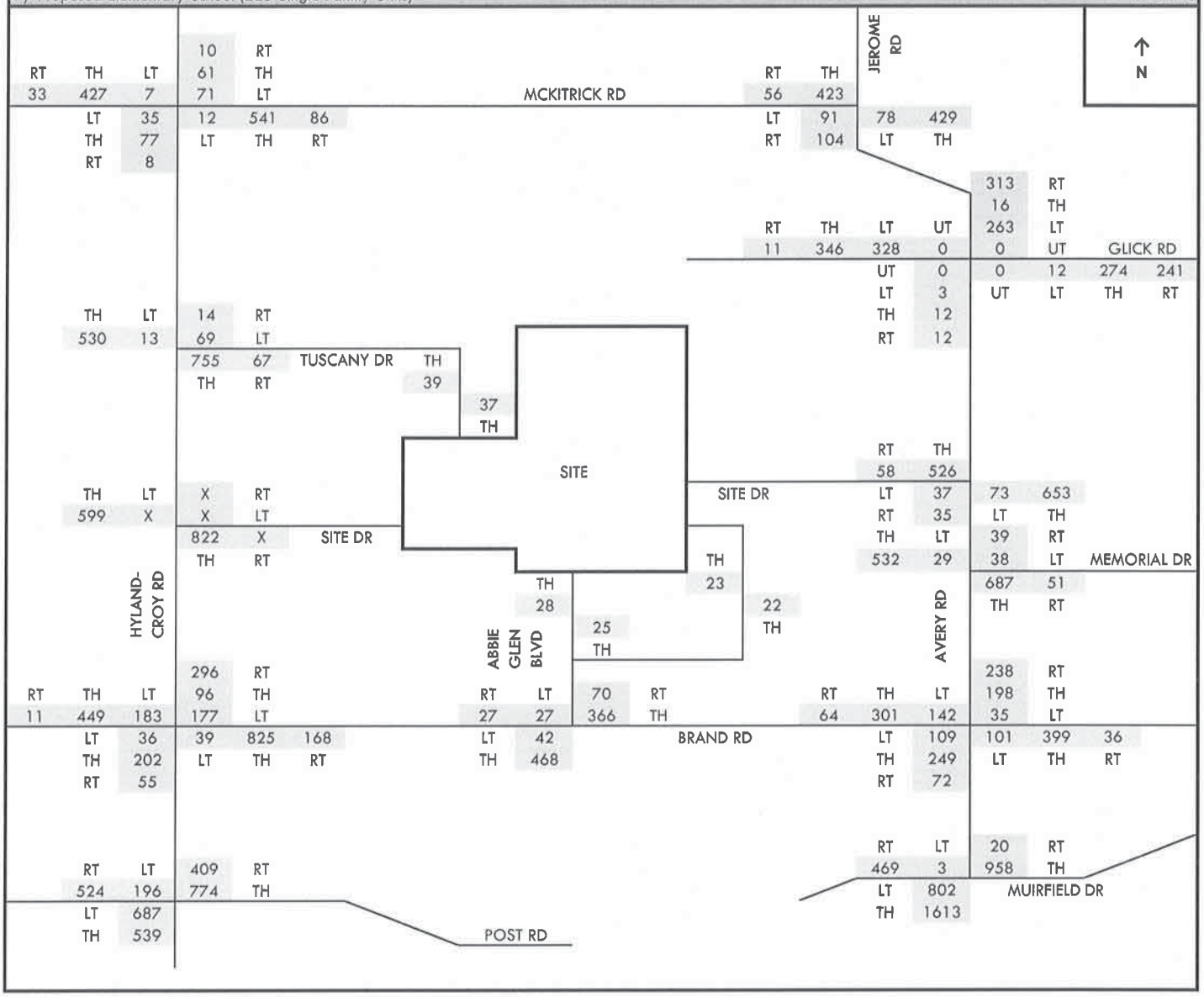
2024 Full Build Traffic - w/o Hyland-Croy Site Drive — **PM Peak Hour**
w/ Proposed Elementary School (225 Single Family Units) — V=V1+T