SEQUENCE
- DEMOLITION
- REPAIR EX. FOUNDATION
- INSTALL PIERS
- INSTALL CONCRETE SLAB
- INSTALL STONE FACING AND STEPS
- INSTALL POSTS AND FRAMING
- INSTALL RAILINGS AND ROOF

NOTES
- ALL FRAMING MATERIAL TO BE #1 OR BETTER ROUGH SAWN CEDAR
- ROOF DECK TO BE 2" x 6" NOM STRUCTURAL DECKING - T & G SCREWED W/ 1/4" x 3 1/2" SCREWS
- ALL HARDWARE SHALL BE GALVANIZED AND MEET OBC 2304.9.5.1 AND ASTM A153 COATING MIN.

DEMOLITION PLAN NOTES
1- REMOVE ALL EXSTG FRAMING
2- TUCK POINT EXSTG STONE FOUNDATION AND REPLACE MISSING STONE
3 - REMOVE EXSTG STEPS
4 - REMOVE LOOSE STONE/CONCRETE FROM EXSTG SLAB ONLY

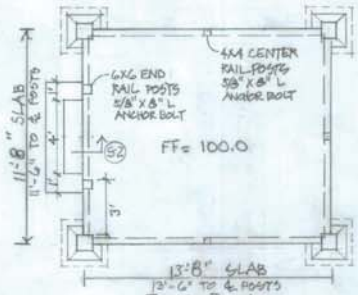

FLOOR PLAN

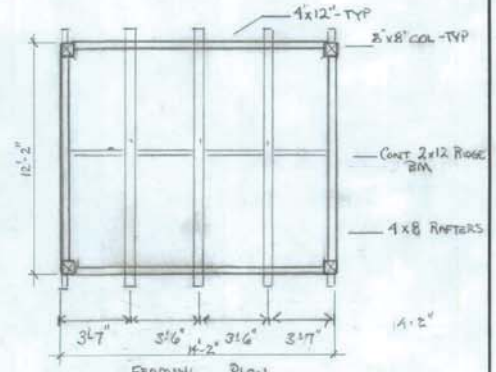

FRAMING PLAN

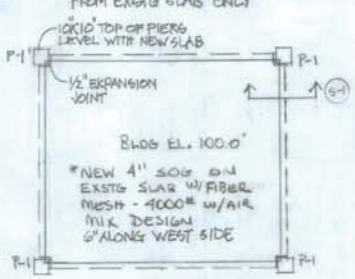

FOUNDATION PLAN 1/4"=1.0'

WALL/PIER SECTION
1/2" = 1'-0"

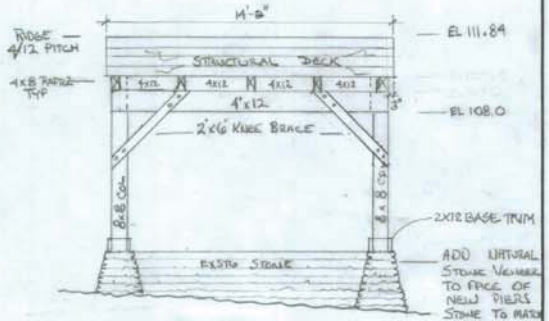

STRUCTURAL ELEVATION
SOUTH

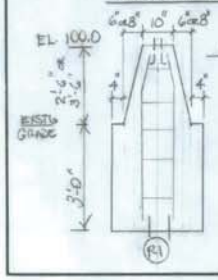

NEW PIER
INSTALL @ 3.0' BELOW GRADE IF STONE IS ENCOUNTERED
INSTALL 4 # 4 W/ MIN 10" EMBED USING EPOXY SYSTEM

P-1 = 10" x 10" @ TOP - 2'-6" x 2'-6" @ BASE
4-#4 @ 1'-0" C/C-V WITH #3 COLLAR TIES @ 12" C/C — LOWER SECTION
4-#4 @ 8" C/C-V W- #3 @ 12" C/C COLLAR TIES — UPPER SECTION
2-5/8" x 8" L ANCHOR BOLTS

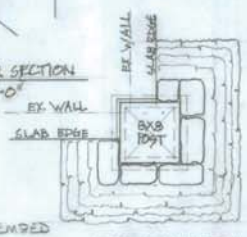

PIER PLAN DETAIL
1" = 1'-0"

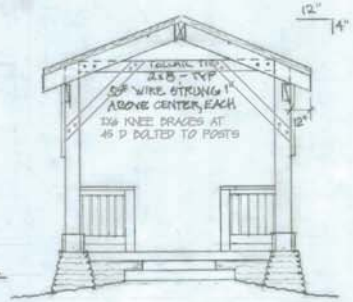

STRUCTURAL ELEVATION
WEST

DUBLIN SPRINGS SHELTER RENOVATION		
SCALE:	APPROVED BY:	DRAWN BY:
DATE:		REVISED:
		DRAWING NUMBER S-1

CITY OF DUBLIN

DIVISION OF PARKS & OPEN SPACE
6555 SHIER-RINGS ROAD
DUBLIN, OHIO 43016
PH (614) 410-4700
FAX (614) 761-6512

ECO—DESIGN & ENGINEERING, LTD
7700 Wells Road
Plain City, Ohio 43064
Phone / FAX (614) 733-0049

DUBLIN SPRING PARK SHELTER REPLACEMENT

56 S RIVERVIEW STREET
DUBLIN, OHIO 43017

DATE: 11/11/14	SCALE: 1"=5'-0"
DRAWN BY: SES	SHEET NUMBER C4

DETAILS

CONNECTION SCHEDULE

LOCATION	CONNECTION	REQD CONNECTOR
C-1	CULUMN to PIER	SIMPSON ABU88
C-2	BEAM to COLUMN	2- 3/4" BOLTS
C-3	KNEE BRACE to COLUMN & BEAM	2- 5/8" BOLTS
C-4	RAFTER to BEAM	SIMPSON H-8-2 REQD
C-5	COLLAR tie to RAFTER	2- 1/2" BOLTS
C-6	RAFTER TO RIDGE	SIMPSON LSU 4.12
C-7	POST TO SLAB	SIMPSON ABA 44
C-8	POST TO SLAB	SIMPSON ABA 66

NOTES

1) ALL CONNECTIONS TO BE GALVANIZED
2) ALL BOLTS TO BE COUNTERSUNK & PLUGGED USING OAK DOWELS
3) ALL HORIZONTAL SURFACES OF FRAMING to HAVE 50# BLADED LINE WITH EYE BOLTS FOR BIRD DETERENT
4) BASE CONNECTOR @ PIER TO COLUMN TO BE MORTISED & TRIMMED USING 2x12 CEDAR WITH TOP BEVELED

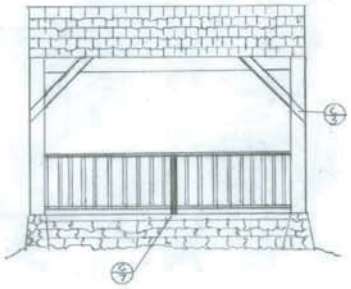

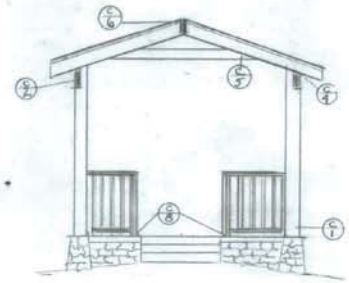

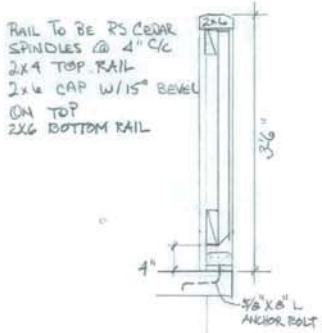

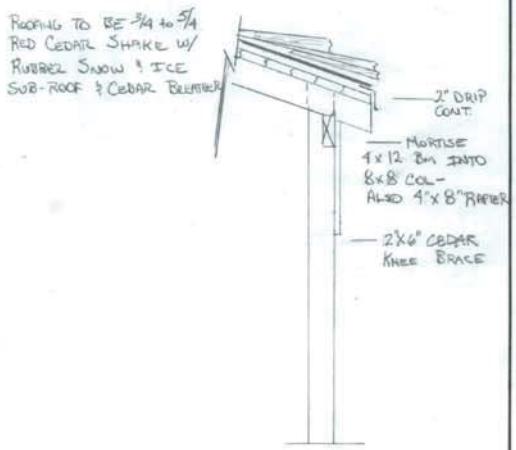

DUBLIN SPRINGS SHELTER RENOVATION

SCALE:	APPROVED BY:	DRAWN BY:
DATE:		REVISED:
		DRAWING NUMBER A-1

CITY OF DUBLIN

DIVISION OF PARKS & OPEN SPACE
6555 SHIER-RINGS ROAD
DUBLIN, OHIO 43016
PH (614) 410-4700
FAX (614) 761-6512

ECO—DESIGN & ENGINEERING, LTD
7700 Wells Road
Plain City, Ohio 43064
Phone / FAX (614) 733-0049

DUBLIN SPRING PARK SHELTER REPLACEMENT

56 S RIVERVIEW STREET
DUBLIN, OHIO 43017

DATE:	SCALE:
11/11/14	1"=5.7'
DRAWN BY:	**SHEET NUMBER**
SES	**C5**

DETAILS