LEGEND

a
proposed older adult activity area - program and amenities to be determined; community relations center to be removed; existing barn to remain

b
proposed environmental discovery center - program and amenities to be determined - parking reconfigured and expanded as necessary to meet program requirements

c
existing dublin recreation center buildings - parking and associated outdoor spaces to remain

d
proposed formal lawn area; open lawn - shelter with restroom facilities - additional parking approximately 100 spaces - green stormwater strategies for hardscape runoff where possible - possilbe overflow parking on lawn

e
proposed amphitheater structure with roof - 2000 person capacity minimum - seating shown for approximately 1000 in stepped wall area - lawn area provides overflow seating

f
existing utility and storage area - reconfigured entry drive - remove existing post road and bury utilities; existing uses and buildings to remain

g
proposed elevated overlook/shelter and boardwalk; riparian corridor restoration and stormwater storage expansion

h
proposed open lawn picnic area and spray park - remove existing courts - existing shelters and play areas to remain

i
existing city hall and coffman homestead historic site - parking reconfiguration approximately 150 spaces - green stormwater strategies for hardscape runoff where possible

j
proposed lighted sports court area - relocated and expanded tennis (6 courts), relocated and expanded basketball (2 courts). Potential fitness stations, additional 15,000 s.f. hardcourt expansion area (relocated skate facility), restroom and shelter building, parking expansion approximately 100 spaces; utilize green stormwater strategies for hardscape runoff.

k
proposed open play area

l
existing entry drive - proposed realignment - single roadway

m
existing vehicular entry, typical; entry marker at each location

n
existing and proposed recreation paths, typical - bike and walking path

o
proposed pedestrian entry, typical; entry marker at each location

p
proposed bike path extension and festival "main street", typical; 8-10' width

q
proposed pedestrian walkway, typical; 6' width

r
proposed pedestrian creek crossing, typical

s
potential future city hall - 70,000 square feet (two-story) and associated parking (approximately 300 spaces)

COFFMAN PARK | DUBLIN - OHIO | MASTER PLAN

MKSK

COFFMAN PARK PHASE 2

THE CITY OF DUBLIN

Date 2014 12 14

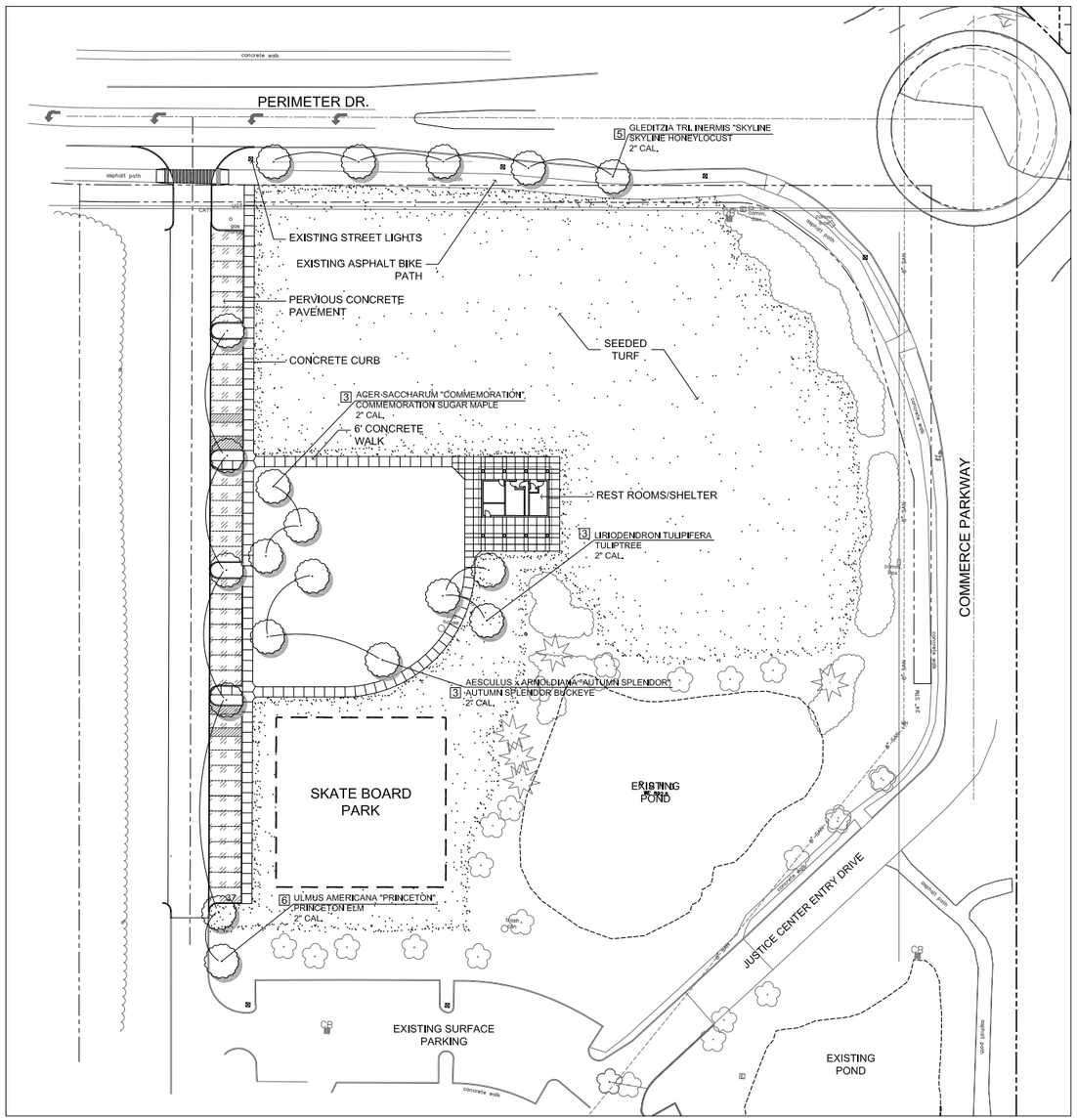

A PHASE ONE JUSTICE CENTER PLAN

SCALE: 1" = 40'-0"

0' 20' 40' 60'

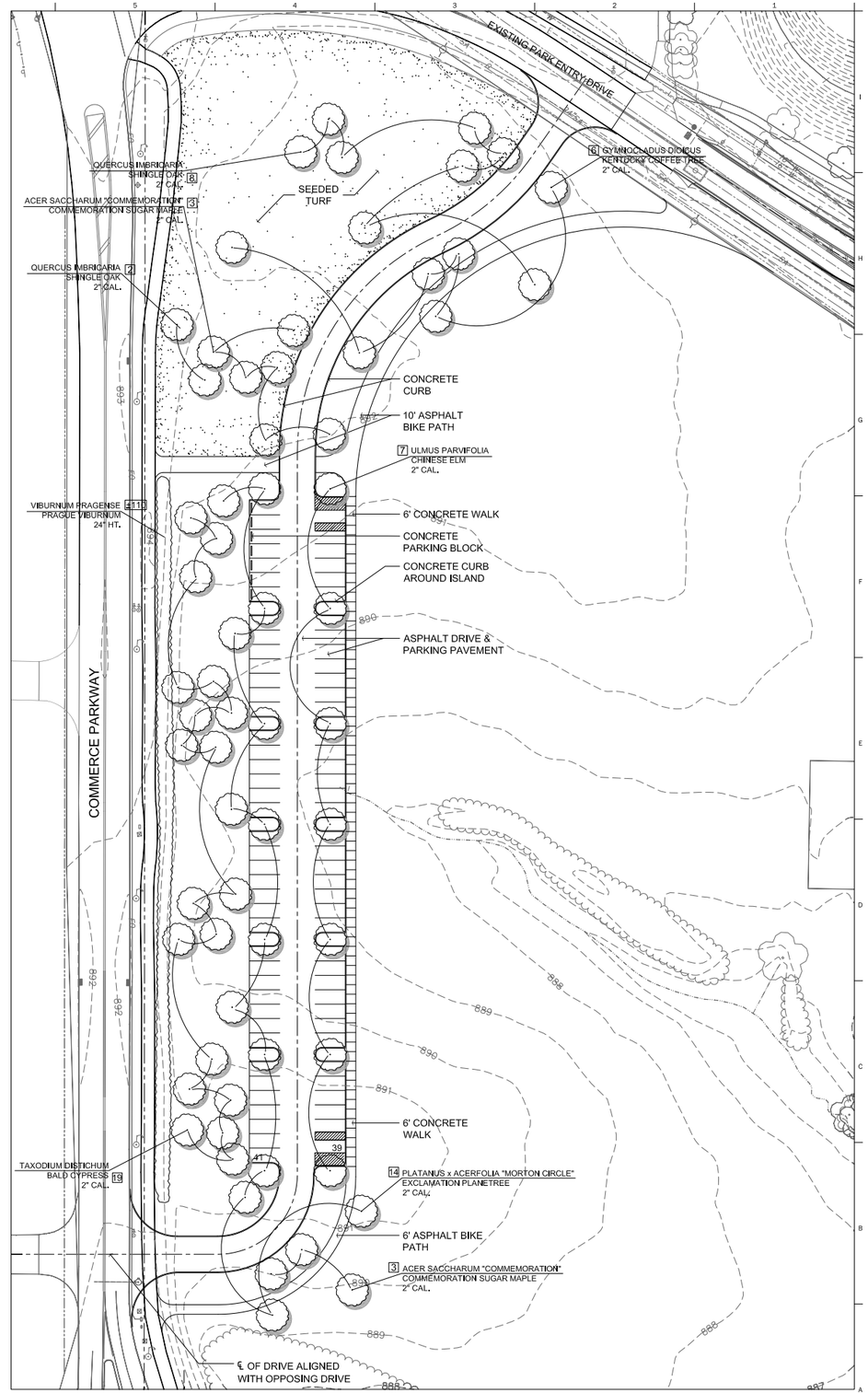

B COFFMAN PARK

SCALE: 1" = 40'-0"

0' 20' 40' 60'

MKSK

LANDSCAPE ARCHITECTURE + URBAN PLANNING

462 SOUTH LUDLOW ALLEY
COLUMBUS, OH 43215
614.621.2796
MKSKSTUDIOS.COM

client / owner

City of Dublin-Parks & Open Space Dept.
6555 Shier-Rings Rd.
Dublin, OH 43016
p 614.410.4700

project name

COFFMAN PARK PHASE TWO

project address

5200 Emerald Parkway
Dublin, OH 43017

civil engineer

Eco-Design & Engineering
7700 Wells Rd.
Plain City, OH 43064
p 614.733.0049

architecture

Ford & Associates
1500 West 1st Avenue
Columbus, OH 43212
p 614.488.2598

SUBMITTAL SET

revision	date	issued

key plan

issue date 12.19.2014

project number c14201

sheet name

HARDSCAPE & LANDSCAPE PLAN

sheet number

SP-1

P:\2014\c14201-coffman park ph II\cad\current\c14201 BS.dwg Dec 17, 2014 - 3:56pm lhelton

ELEVATION CODED NOTES

1. ALUMINUM CLAD, FIXED WOOD CASEMENT WINDOW.
2. HOLLOW METAL DOOR & FRAME, PAINT
3. CULTURED FIELD STONE o/ METAL LATH o/ CMU FOUNDATION.
4. CULTURED FIELD STONE PIER CAP
5. CULTURED FIELD STONE WATER TABLE
6. SHIP LAP HARDIE PLANK SIDING w/ 5" EXPOSURE o/ TYVEK COMMERCIAL WRAP o/ 5/8" EXTERIOR SHEATHING o/ 2x4 WOOD FRAMING.
7. VERTICAL SEAMED "TEE-PANEL" METAL SIDING o/ TYVEK COMMERCIAL WRAP o/ 5/8" EXTERIOR SHEATHING o/ 2x4 WOOD FRAMING.
8. PREFINISHED METAL EDGE FLASHING (24 GA.)
9. PREFINISHED METAL (24 GA.) SCUPPER BOX w/ LAMBS TONGUE
10. EXPOSED CEDAR TIMBER FRAMING w/ EXPOSED PAINTED STEEL PLATE FASTENERS.
11. PREFINISHED STANDING SEAM METAL ROOF.
12. 1 x 4 SMOOTH CEDAR TRIM, PAINT.
13. 1 x 6 SMOOTH CEDAR FASCIA, PAINT.
14. LINE OF ROOF BEYOND
15. WATER FOUNTAIN BEYOND
16. CLEAR CEDAR ROOF PANELS

MATERIAL FINISH KEY

MARK	TYPE	NOTES
CS-1	CULTURED FIELD STONE	ELDORADO STONE - MOUNTAIN LEDGE PANELS. FINISH - WHISKEY CREEK.
CS-2	CULTURED FIELD STONE WATERTABLE / PIER CAP	ELDORADO STONE - PIER CAP & WAINSCOTT SILL. SMOOTH FINISH.
MT-1	MORTAR	T.B.D.
MTL-1	VERTICAL SEAMED METAL SIDING, FLASHING, SCUPPER BOX	DMI, SNAP ON SEAM HIGH PROFILE 5515-18 w/ LOW BEAD STIFFENER. FINISH - METALLIC COPPER.
MTL-2	PREFINISHED STANDING SEAM METAL ROOF, FLASHING	DMI, SNAP ON SEAM HIGH PROFILE 5515-18 w/ LOW BEAD STIFFENER. FINISH - WEATHERED ZINC.
PT-1	PAINT	SHERWIN WILLIAMS - SW T.B.D.
PT-2	PAINT	SHERWIN WILLIAMS - SW T.B.D.
WIN-1	WINDOWS	PELLA ARCHITECT SERIES FIXED CASEMENT WINDOW. COLOR TO BE PELLA STANDARD WHITE
WD-1	CEDAR WOOD FRAMING	CLEAR CEDAR, STAIN - SEE SECTIONS FOR SIZES & PROFILES
WD-2	CEDAR WOOD HORIZONTAL SIDING	CLEAR CEDAR, STAIN - SEE SECTIONS FOR SIZES & PROFILES

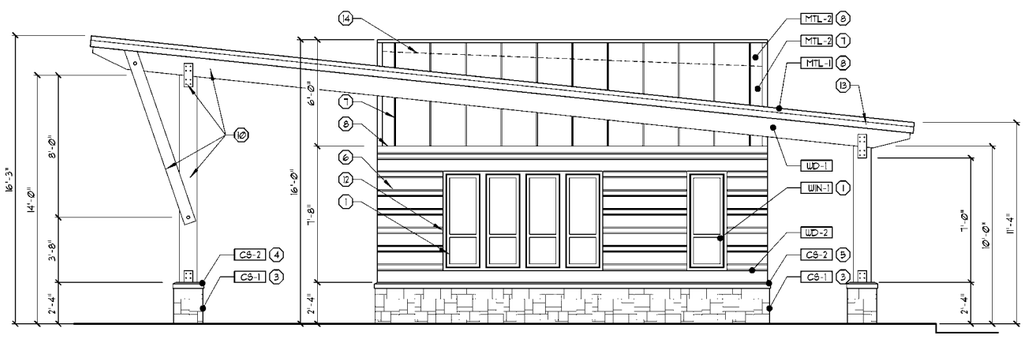

A RIGHT ELEVATION
SCALE: 1/4" = 1'-0"

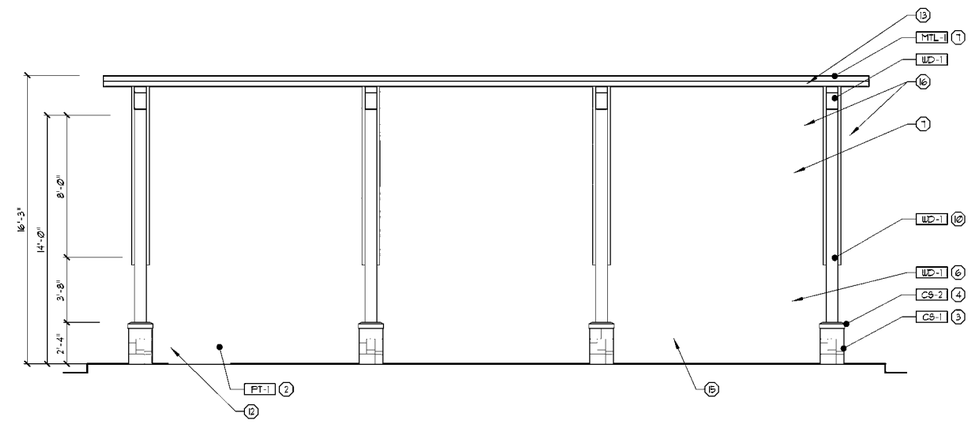

B FRONT ELEVATION
SCALE: 1/4" = 1'-0"

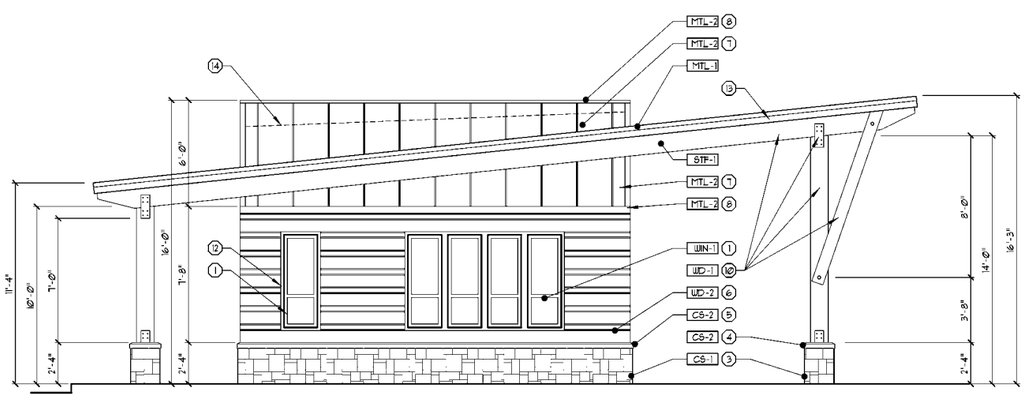

C LEFT ELEVATION
SCALE: 1/4" = 1'-0"

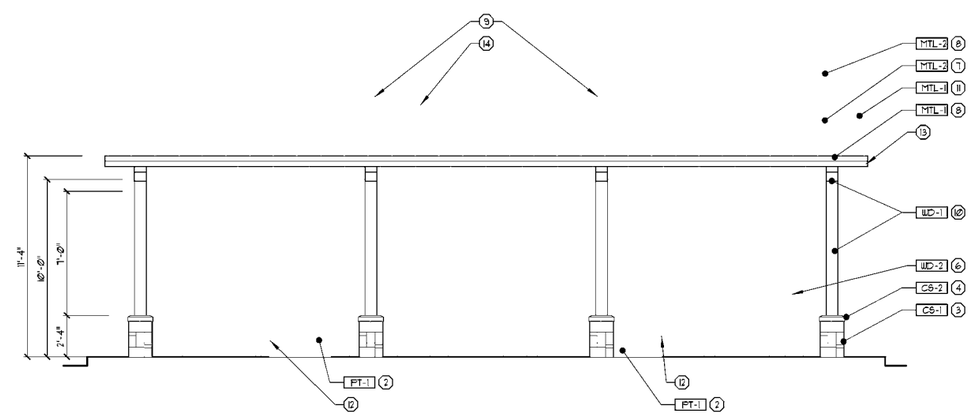

D REAR ELEVATION
SCALE: 1/4" = 1'-0"

FORD & ASSOCIATES

1500 West First Avenue
Columbus, Ohio 43212
P: 614.488.6252
F: 614.488.9963

ARCHITECTS

COFFMAN PARK
5200 EMERALD PARKWAY
DUBLIN, OH 43017

For

CITY OF DUBLIN - PARKS & OPEN SPACE
6555 SHIER-RINGS ROAD
DUBLIN, OHIO 43017

Copyright 2014. All Drawings are and shall remain the property of Ford & Associates Architects, Inc. and may not be used, duplicated, or altered without the written consent of the Architect.

PRELIMINARY
NOT FOR CONSTRUCTION

ISSUE	REVISION	DATE
PLANNING & ZONING		DEC. 19, 2014

BUILDING ELEVATIONS & NOTES

FAA# 14051

A-2.1

COFFMAN PARK