City of Dublin

13-014.0-CIP
13-015.0-CIP

Proposal
And
Contract Documents
for

SR 161 / RIVERSIDE DRIVE ROUNDABOUT (PART 1) AND RIVERSIDE DRIVE REALIGNMENT AND OTHER PUBLIC IMPROVEMENTS (PART 2)

13-014.0-CIP
13-015.0-CIP

City of Dublin

BID SUBMITTAL AND CONTRACT DOCUMENTS FOR THE

CITY OF DUBLIN

SR 161 / RIVERSIDE DRIVE ROUNDABOUT (PART1) AND RIVERSIDE DRIVE REALIGNMENT AND OTHER PUBLIC IMPROVEMENTS (PART 2)

TABLE OF CONTENTS

I. BIDDING REQUIREMENTS 1

A. INVITATION FOR BIDS 2
B. INSTRUCTIONS TO BIDDERS 4
C. REQUEST FOR INFORMATION (PRE-BID) 17
D. BID COVERSHEET 18
E. PREVAILING WAGE RATES DISK 20

II. BIDDING FORMS 21

A. PROPOSAL 22
B. BID SCHEDULE...(PART 1) 27-1 to 27- 19 & (PART 2) 27- 1 TO 27- 19
C. COMBINED BID/PERFORMANCE/PAYMENT BOND 28
D. ALTERNATE BID SECURITY FORM 31
F. AFFIDAVIT OF AUTHORITY 32
G. COMBINED DELINQUENT PERSONAL PROPERTY TAX & NONCOLLUSION AFFIDAVIT 33
H. W-9 FORM 34
I. LIST OF SUBCONTRACTORS 35
J. CONTRACTOR QUALIFICATION STATEMENT 37

III. ADDITIONAL CONTRACT DOCUMENTS 53

A. CITY/CONTRACTOR AGREEMENT 54
B. CITY OF DUBLIN GENERAL CONDITIONS DIVISION 100 64
C. SUPPLEMENTAL GENERAL CONDITIONS 65
D. SUPPLEMENTAL SPECIFICATIONS 66
E. GEOTECHNICAL REPORTS 67
F. ASBESTOS REPORT 68
G. STANDARD DRAWINGS 69
H. SCOPE OF WORK 70

IV. OWNER COMPLETED FORMS 71

A. OWNER EXECUTION CHECKLIST 72
B. NOTICE OF AWARD TO BIDDER 73
C. NOTICE OF AWARD TO SURETY AND SURETY'S AGENT 74
D. NOTICE TO PROCEED 75
E. NOTICE OF COMMENCEMENT OF PUBLIC IMPROVEMENT (O.R.C. §1311.252).....76
F. PREVAILING WAGE BID TABULATION SHEET 77

V. ADDITIONAL PROJECT FORMS 78

A. PAYROLL INFORMATION 79
B. FINAL AFFIDAVIT OF COMPLIANCE WITH PREVAILING WAGES 81
C. CONTRACTOR'S LIEN WAIVER AND RELEASE AGREEMENT....82

VI. PLANS/DRAWINGS 83

I. BIDDING REQUIREMENTS

A. INVITATION FOR BIDS

The CITY OF DUBLIN, Ohio will receive sealed bids for the materials and labor necessary for the construction of the SR 161 / RIVERSIDE DRIVE ROUNDABOUT (PART1) AND RIVERSIDE DRIVE REALIGNMENT AND OTHER PUBLIC IMPROVEMENTS (PART 2) PROJECT. Bids shall be received by CITY OF DUBLIN at 5800 Shier-Rings Road, Dublin, Ohio 43016 until 11:00 A.M. local time on Tuesday March 24, 2015, at which time all bids will be opened and read aloud.

The CITY OF DUBLIN may choose to not award the bid—and bidders shall hold bids open—until sixty days after the bid opening. The work for which bids are invited consists of: the reconstruction of the signalized SR 161 / Riverside Drive intersection as a roundabout and 3200 feet of Riverside Drive on new alignment. The reconstruction includes approximately 36,000 feet of granite curb including granite edged planting beds, 82,500 square feet of brick sidewalk, parking areas with permeable pavers, over 400 trees and 94,000 plantings, new street lighting, AEP and Dublink. **A mandatory pre-bid meeting is scheduled for Monday, March 9, 2015 10:30 AM at 5800 Shier-Rings Road, Dublin, OH 43016.** The cost estimate for the Project is $ 25,070,000.00.

Copies of the Contract Documents are on file at 6555 Shier-Rings Road, Dublin, Ohio 43016, where they are available for inspection purposes only. Prospective bidders can purchase paper copies of the Contract Documents for a NONREFUNDABLE fee at the following locations.

Copies of the Contract Documents are on file at the following locations:

Key Companies Inc.
6180 Cleveland Ave
Columbus OH 43231
614-899-6180
Email keynorth@keycompanies.com
Manager David Collison

Key Companies Inc.
195 East Livingston Ave
Columbus OH 43215
614-228-3285
Manager Noelle Tolbert

Key Companies Inc
411 Elliott Ave
Cincinnati OH 45215
513-821- 0123
Manager Mac McElwain

The bid documents are available for pickup by prospective ODOT pre-qualified bidders between the hours of 7:00 a.m. to 6:00 p.m. (local time), Monday through Friday. Paper copies of the contract documents are available for a nonrefundable charge of $450.00 for full size drawings or $250.00 for half size. All shipping charges will be at bidder's expense. Please make any check payable to the Key Companies. Plan set orders shall be made by going to www.plankey.com. Documents are also

available online at http://dublinohiousa.gov/bids-and-requests-for-proposals. When downloading bid documents from online you must register as a plan holder to receive any addendums that may be issued.

Each bidder is required to furnish with its proposal a Bid Guaranty in accordance with Section 153.54 of the Ohio Revised Code. Bid security furnished in Bond form shall be issued by a surety company or corporation licensed in the State of Ohio to provide said surety.

Each proposal must contain the full name of the party or parties submitting the proposal and all persons interested therein. Each bidder must submit evidence of its experience on projects of similar size and complexity. The owner intends and requires that this project be completed by October 15, 2016.

All contractors and subcontractors involved with the project will to the extent practicable use Ohio products, materials, services and labor in the implementation of their project. Payment of Prevailing Wages IS required for this Project.

The CITY OF DUBLIN reserves the right to accept or reject any or all bids, to waive any informalities or irregularities in the bidding process and to enter into a contract with the bidder whom, in its opinion, offers the lowest and best bid.

Each bidder must ensure that all employees and applicants for employment are not discriminated against based on race, color, religion, sex, or national origin.

By order of the Council of the CITY OF DUBLIN, OHIO. Ordinance number N/A.

Publish dates: March 2, 2015
March 9, 2015

B. INSTRUCTIONS TO BIDDERS

1. PRELIMINARY MATTERS

   a. The Project owner is the CITY OF DUBLIN, OHIO. The Owner's Representative is Paul A. Hammersmith P.E., Director of Engineering / City Engineer. You may direct questions or request for additional information to **Mandy K. Bishop, P.E., S.I. at Telephone: 614-410-4672; or Email: mbishop@gpdgroup.com. The deadline for questions is Friday March 13, 2015 at 5:00 P.M. local time.**

   b. In connection with the Legal Notice, the CITY OF DUBLIN (hereinafter called the "City"), issues this Request for Bids for all labor, material, and services necessary for constructing the SR 161 / RIVERSIDE DRIVE ROUNDABOUT (PART1) AND RIVERSIDE DRIVE REALIGNMENT AND OTHER PUBLIC IMPROVEMENTS (PART 2) PROJECT (the "Project"), as more fully described in the Contract Documents.

   c. Definitions. The word uses here shall have the following meanings:

      i. "City" or "Owner" shall mean the CITY OF DUBLIN, OHIO.

      ii. "Bidder" or "Contractor" shall all mean an entity or person that submits a bid for the Project and ultimately the entity or person awarded the contract as applicable.

      iii. "Contract Documents" shall mean the documents included with this bid solicitation and listed as Contract Documents in the City/Contractor Agreement.

      iv. "O.R.C." shall mean the OHIO REVISED CODE.

   d. The Project consists of the following contract(s) for the work on the Project:

      i. General Contract

   e. Estimate of Cost [O.R.C. 153.12(A)].

      i. The total estimated construction cost for the base bid Work for the Project for which the City is soliciting bids at this time is $ 25,070,000.00.

2. CONTRACTOR QUALIFICATIONS, REGISTERED CONTRACTORS, INCOME TAX, PERMITTING

   a. A Bidder may be a person, private entity, or any combination of such entities supported by a letter of intent to enter into an agreement or under an existing agreement in association in the form of a joint venture or other consortium. In the case of a joint venture or other consortium:

      i. All members shall be jointly and severally liable for the execution of the Contract, and

      ii. The association shall nominate a representative who shall have the authority to conduct all business for and on behalf of any and all the members of the joint venture or the consortium during the bidding process and, in the event the joint venture or consortium is awarded the Contract, during Contract execution.

b. Threshold Qualifications. Every Contractor, before entering a contract with the City, must demonstrate the following:

   i. Registered Contractors. Any person or company (including subcontractors) intending to do work under these Contract Documents shall be required to meet the CITY OF DUBLIN laws for Contractor Registration, if any, contained in the Codified Ordinances of the CITY OF DUBLIN as applicable to the particular classification of work to be performed.

   ii. Licensed Contractors. Bidders and subcontractors for work requiring licenses under the O.R.C. shall submit evidence of such licensing in accordance with O.R.C. Chapter 4740.

   iii. Foreign Corporations. Business entities formed outside of the state of Ohio shall present proof of registry with the Ohio Secretary of State and demonstrate the existence of an Ohio statutory agent.

c. Income Taxes. All persons or entities performing work under these Contract Documents shall comply with the requirements set forth in the Codified Ordinances of the CITY OF DUBLIN.

d. Permits and Regulations - Unless otherwise previously or subsequently specified, the Contractor shall procure and pay for all permits, licenses, inspections and approvals necessary for the execution of his contract. The City will obtain the required building permit for permanent structure.

   i. The Contractor shall comply with all laws, ordinances, rules, orders and regulations relating to the performance of the work required to complete the Project.

   ii. The Contractor's attention is directed to the "Safety and Health Regulations for Construction" of the Occupational Safety and Health Administration, U.S. Department of Labor and to its responsibilities thereunder.

3. GENERAL INSTRUCTIONS

a. City expects the Bidder to examine all instructions, forms, terms, and specifications in the Request for Bids. Each Bidder is solely responsible for conducting its own due diligence and investigation in support of the preparation of Bids, negotiation of agreements, and the subsequent delivery of all services it will provide. Bidder's failure to furnish all information or documentation required by the Bidding Documents may result in the City rejecting the Bid.

b. Contractors providing Bids shall include the summation of all costs associated with Parts 1 and 2 only. All bids for both parts are to be provided and the sum shall be provided as the bid price on page 22 of this document. Bid Prices only completed for a single part of work will be deemed non-responsive.

c. Public Information. The City considers all information, documentation and other materials requested to be submitted in response to this solicitation to be a non-confidential and/or non-proprietary nature and therefore subject to public disclosure

under the Ohio Public Records Laws except as specifically exempted by those laws. [O.R.C. Chapter 149].

d. Bidder should carefully read the information contained herein. It is the Bidder's responsibility to submit a complete response to all requirements and questions. Any information submitted by Bidders shall become the property of the City and submitted at the Bidder's sole expense. The City shall not pay any stipend for any submissions related to the bidding process. The City will not provide compensation to Bidders for any expenses incurred for Bid preparation or for any presentations made.

e. The City may disqualify bids that are qualified with conditional clauses, or alterations, or items not called for in the bid documents, or irregularities and deviations from the requirements of the Contract Documents.

f. The City makes no guarantee that an award will be made because of this bid, and reserves the right to accept or reject any or all bids, waive any formalities or minor technical inconsistencies, or delete any item/requirements from this bid or resulting contract when deemed to be in the City's best interest.

4. INTERPRETATION

a. If a Bidder contemplating submitting a Bid for the proposed Project is in doubt as to the true meaning of any part of the Contract Documents, **it may submit a written request for an interpretation thereof to Mandy K. Bishop, P.E., S.I., in writing on the form included with the Contract Documents. Inquiries shall be faxed to 614-453-8707 or e-mailed to** mbishop@gpdgroup.com **to the attention of Mandy K. Bishop, P.E., S.I.**. The City will make any interpretation of the proposed documents by Addendum only, duly signed by the City, and a copy of such Addendum will be mailed or delivered to each Bidder receiving a set of Contract Documents and each plan room where the City maintains the Contract Documents. The City will not be responsible for any other explanation or interpretation of the proposed documents. **The deadline for inquiries is Friday, March 13, 2015 at 5:00 local time.**

b. In interpreting the Contract Documents, the Bidder shall interpret words describing materials that have a well-known technical or trade meaning, unless otherwise specifically defined in the Contract Documents, in accordance with the well-known meaning recognized by the trade.

5. DOCUMENTS TO SUBMIT WITH BID

a. The Bidder shall submit the following completed forms with its response to this Request for Bids:

i. Bid Form

ii. Bid Guaranty and Contract Bond

iii. Affidavit of Authority (if applicable)

iv. Personal Property Tax Affidavit

v. Bidder's Qualification Statement

vi. Insurance Certificate

vii. Noncollusion affidavit

viii. State of Ohio Bureau of Workers' Compensation Certificate

ix. Proposed Supervisory Personnel List

x. Proposed Subcontractor List

xi. Bidder's and Subcontractors' Certificate(s) of licensure, if applicable

b. In addition to the foregoing requirements, Bids submitted by a joint venture or other consortium shall include a copy of the joint venture/consortium agreement entered into by all members. Alternatively, a binding letter of intent or similar irrevocable instrument to execute a joint venture/consortium agreement in the event of a successful Bid shall be signed by all members and submitted with the Bid, together with a copy of the proposed joint venture/consortium agreement.

c. Each Bidder shall submit the following number of copies of its Bid to the City: 1 copy printed one sided and one additional copy in electronic PDF form. The PDF form must exactly match the hard copy and must be provided within 24 hours after the Bid opening. The Bid Form shall be signed with the name typed or printed below the signature. A Bid shall not be submitted by facsimile transmission. A Bidder shall sign its Bid in the form required under Ohio law to bind the Bidder's particular type of business entity to a contract.

d. Each Bid shall be enclosed and delivered in a sealed opaque envelope with the Bidder's name and the title of the Project printed in the upper left hand corner and addressed as follows: **ATTN: Paul A. Hammersmith P.E., Director of Engineering / City Engineer, 5800 Shier-Rings Road, Dublin, Ohio 43016.** The Bidder shall be responsible for delivering its Bid to this office and address for the Bid opening before the deadline set forth in the Legal Notice—as extended by any addenda. The City will not open Bids that arrive after the deadline regardless of how the Bidder delivers the Bid.

e. After the City opens the Bids, it may require the Bidders to submit additional financial information. The City shall keep additional financial information it receives pursuant to a request under this paragraph confidential to the extent possible, except under proper order of a court. The additional financial information should not be a public record under section 149.43 of the Revised Code. (*See* O.R.C. 9.312).

6. CLARIFICATION OF BIDS

a. To assist in the examination, evaluation, and comparison of the Bids and the qualifications of the Bidders, the City may ask any Bidder for a clarification of its Bid. Any clarification submitted by a Bidder that is not in response to a request by the City shall not be considered. The City's request for clarification and the response shall be in writing. No change in the prices or substance of the Bid shall be sought, offered, or permitted, except to confirm the correction of arithmetic errors discovered by the City in the evaluation of the Bids.

7. BONDS

   a. Each bidder shall submit one of the statutorily required forms of bid security as set forth in O.R.C. Section 153.54 on the form included with the Contract Documents. There are two ways to meet these requirements:

      i. OPTION #1: Submit the Combined Bid/Performance/Payment Bond on the form included with the Contract Documents along with the Bid; or,

      ii. OPTION #2: Submit a certified check, cashier's check, or letter of credit pursuant to Chapter 1305 of the Revised Code, conditioned to provide that if the bid is accepted, the bidder, after the awarding or the recommendation for the award of the contract, whichever the contracting authority designates, will enter into a proper contract in accordance with the bid, plans, details, specifications, and bills of material. Any letter of credit shall be revocable only at the option of the City. The amount of the certified check, cashier's check, or letter of credit shall be equal to ten per cent of the bid. Any of the foregoing instruments shall be submitted with the CITY OF DUBLIN listed as the payee or beneficiary. If the Bidder chooses option ii and is awarded the Contract, the Bidder shall then submit a Bond using the form included with the Contract Documents.

   b. With any Bond required here, the Bidder shall submit or ensure:

      i. *Ohio Department of Insurance Certificate*. Proof that the bond is issued by a surety company ("Surety") authorized by the Ohio Department of Insurance to transact business in the State of Ohio and acceptable to the City in the form of a certificate.

      ii. *A Financial Statement*. Proof that the bond is issued by a Surety capable of demonstrating a record of competent underwriting, efficient management, adequate reserves, and sound investments. These criteria will be deemed to be met if the Surety currently has an A.M. Best Company Policyholders rating of "A-" better and has or exceeds the Best Financial Size Category of Class VI. Other Sureties may be acceptable to the City, in its sole discretion.

      iii. *Proper signatures, credentials, and Power of Attorney*. The bond shall be signed by an authorized agent of an acceptable Surety and by the Bidder; and, include credentials showing the Power of Attorney of the agent.

      iv. The name, address, and telephone and fax numbers of the Surety and the Surety's Agent should be typed or printed on each bond.

8. EXECUTION OF CONTRACT

   a. Within 10 days after award of the Contract, the successful Bidder shall execute and deliver to the City an original of the City/Contractor Agreement, based upon the City's form. Such contract shall include the terms required by Ohio law and documents required by the Instructions to Bidders and Contract Documents for the Project. The successful Bidder shall have no property interest or rights under the City/Contractor Agreement until the Agreement is properly executed by the City.

9. STATE SALES AND USE TAXES

   a. The City is a political subdivision of the State of Ohio and is exempt from taxation under the Ohio Sales Tax and Use Tax Laws. Building materials that the successful Bidder purchases for incorporation into the Project will be exempt from state sales and use taxes if the successful Bidder provides a properly completed Ohio Department of Taxation Demolition Contract Exemption Certificate to the vendors or suppliers when acquiring the materials. The City will execute properly completed certificates on request.

10. COMPLETION DATE

   a. Completion Date. Each successful Bidder shall have its Work on the Project Complete as follows: October 15, 2016**.** The Contract Time shall run from the date of the Notice to Proceed or if there is no Notice to Proceed from the Effective Date of the City/Contractor Agreement.

11. MODIFICATION/WITHDRAWAL OF BIDS

   a. Modification. A Bidder may modify its Bid by written communication to the City addressed to the City's Representative at any time before the scheduled closing time for receipt of Bids, provided such written communication is received by City's Representative before the Bid deadline. The written communication shall not reveal the Bid price, but should provide the addition or subtraction or other modification so that the final prices or terms will not be known to the City until the sealed Bid is opened. If the Bidder's written instructions with the change in Bid reveal the Bid amount in any way before the Bid opening, the Bid may be rejected as non-responsive.

   b. Withdrawal. Bids may be withdrawn with permission of the City or in strict accordance with O.R.C. Section 9.31 which generally commands that Bidders may withdraw their bids from consideration if the price of the bid was substantially lower than the other bids, providing the bid was submitted in good faith, and the reason for the price bid being substantially lower was a clerical mistake as opposed to a judgment mistake, and was actually due to an unintentional and substantial arithmetic error or an unintentional omission of a substantial quantity of work, labor, or material made directly in the compilation of the bid. Notice of a claim of right to withdraw such bid must be made in writing filed with the City within two business days after the conclusion of the bid opening procedure.

12. PREVAILING WAGES

   a. This Project is horizontal construction with an estimated cost of $ 25,070,000.00, and the **Bidder IS required to comply with all applicable Ohio Prevailing Wage requirements and labor laws for this Project.**

   b. If Prevailing Wage applies to this Project, the determination of the prevailing rates of wages of mechanics and laborers in accordance with section 4115.05 of the Revised Code for the class of work called for by the Project, in the locality where the work is to be performed, shall be attached to and made part of the Contract Documents.

   c. If Prevailing Wage applies to this Project, the Contractor must pay at least the wage rates subsequently listed in the Wage determinations. The Contractor must submit properly

executed copies of the Contractor's and subcontractor's payrolls to the City's Prevailing Wage Coordinator in accordance with the requirements of Section 4115.071 of the O.R.C.. Payroll records shall be kept current as failure to do so will delay the Owner's approval for payment of any pending estimates.

13. ALTERNATES

a. The City may request bids on alternates. If the City requests bids on alternates, the Bidder should include the cost of the alternates requested on its Bid Form.

b. At the time of awarding the contract, the City will select or reject alternates as it determines is in its best interest. A Bidder's failure to include in its Bid Form the cost of an alternate selected by the City and applicable to the Bidder's work may render the bid non-responsive and be grounds for the rejection of the bid. Otherwise, the failure to include the cost of an alternate will not be deemed material.

c. The Bidder acknowledges that although there is an estimate for the cost of the Project, the market conditions may and frequently do result in the estimate being different from the sum of the bids received, either higher or lower. The Bidder understands that the City may include alternates, which may include deduct alternates as well as add alternates, to give it flexibility to build the Project with the funds available. The Bidder further understands and acknowledges that use of add and deduct alternates is a long held customary practice in the construction industry in the State of Ohio. The Bidder also acknowledges that the City will not make a decision about the alternates on which to base the award of contracts until the bids are received, and the City can compare its available funds with the base bids and the cost or savings from selecting different alternates. The Bidder understands that the award to the Bidder submitting the lowest and best bid will be based on the lowest and best base bid plus selected alternates, and may result in an award to a Bidder other than the Bidder that submitted the lowest base bid. The bidder also acknowledges that its, and other bidders', bids may become responsive or non-responsive based on whether the bidders bid and are qualified for all base work and alternates; and, the City's selection of alternates. The City will evaluate bids to determine the lowest and best bid after it selects the alternates.

d. If, during the progress of the Work, the City desires to reinstate any alternate not included in the Contract, the City reserves the right to reinstate the alternate at the price bid by the Contractor if such action is taken in sufficient time so as not to delay the progress of the work or cause the Contractor additional expense.

14. UNIT PRICES

a. Where unit prices are requested in the Bid Form, the Bidder should quote a unit price. Unless otherwise expressly provided in the Bid Documents, such unit prices shall include all labor, materials, and services necessary for the timely and proper installation of the item for which the unit prices are requested. The unit prices quoted in the bid shall be the basis for any Change Orders entered into under the City/Contractor Agreement, unless the Design Professional determines that the use of such unit prices will cause substantial inequity to either the Contractor or the City.

b. The estimated quantities shown herein are approximate only and the City assumes no responsibility for the accuracy of the estimates. Bidders are cautioned to make their own investigations and determinations of the conditions under which the work will be performed and to base their bids accordingly.

15. ADDENDA

a. The City reserves the right to issue Addenda changing, altering, or supplementing the Contract Documents before the time set for receiving bids. The City will issue the Addenda to clarify bidders' questions and/or to change, alter, or supplement the Contract Documents.

b. Any explanation, interpretation, correction, or modification of the Contract Documents will be issued in writing in the form of an Addendum, which shall be the only means considered binding. Any explanations, interpretations, or other representations made by any other means shall not be legally binding. All Addenda shall become a part of the Contract Documents.

c. Bidders shall submit written questions to the City in sufficient time in advance of the bid opening to allow sufficient time for the City to respond. All Addenda will be issued, except as hereafter provided, and mailed or otherwise furnished to persons who have obtained Contract Documents for the Project, before the published time for the opening of bids.

d. Copies of each Addendum will be sent only to the Bidders to whom Contract Documents have been issued and to Plan Rooms where copies of the Contract Documents are maintained. Receipt of Addenda shall be indicated by Bidders in the space provided on the Bid Form. Bidders are responsible for acquiring issued Addenda in time to incorporate them into their bid. Bidders should contact the City before the bid opening to verify the number of Addenda issued.

e. Each Bidder shall carefully read and review the Contract Documents and immediately bring to the attention of the City any error, omission, inconsistency, or ambiguity therein.

f. If a Bidder fails to indicate receipt of all Addenda through the last Addendum issued by the Design Professional on its Bid Form, the bid of such Bidder will be deemed to be responsive only if:

    i. The bid received clearly indicates that the Bidder received the Addendum, such as where the Addendum added another item to be bid upon and the Bidder submitted a bid on that item; or

    ii. The Addendum involves only a matter of form or is one that has either no effect or has merely a trivial or negligible effect on price, quantity, quality, or delivery of the item bid upon.

16. PREFERENCE FOR PUBLIC IMPROVEMENT CONTRACTS (As Selected)

a. [X] With respect to the award of this Contract, the City shall give preference to a contractor having its principal place of business in Ohio over a contractor having its principal place of business in a state that provides a preference in favor of contractors of that state for the same type of work. Where a preference is provided by another state for

contractors of that state, a contractor having its principal place of business in Ohio is to be granted by the City the same preference over them in the same manner and on the same basis and to the same extent as the preference is granted in letting contracts for the same type of work by the other state. If one party to a joint venture is a contractor having its principal place of business in Ohio, the joint venture shall be considered as having its principal place of business in Ohio.

b. [ ] With respect to the award of this Contract, the City shall not give preference to a contractor having its principal place of business in Ohio over other contractors.

17. METHOD OF AWARD

a. In evaluating Bids, the City may conduct such investigations as are deemed necessary to establish the qualifications and financial ability of the Bidder and its subcontractors and suppliers. The Bidder authorizes the City and its representatives to contact the owners, design professionals, and others having knowledge (collectively "Contacts") on projects on which the Bidder has worked and authorizes and requests such Contacts to provide the City with a candid evaluation of the Bidder's performance. By submitting its Bid, the Bidder agrees that if it or any person, directly or indirectly, on its behalf or for its benefit brings an action against any of such Contacts or the employees of any of them as a result of or related to such candid evaluation, the Bidder will indemnify and hold such Contacts and the employees of any of them from any claims whether or not proven that are part of or are related to such action and from all legal fees and expenses incurred by any of them arising out of or related to such legal action. This obligation is expressly intended for the benefit of such Contacts and the employees of each of them.

b. All Bids shall remain open for acceptance for 60 days following the day of the Bid opening, but the City may, in its sole discretion, release any Bid and return the Bid Guaranty before that date.

c. The City reserves the right to reject any, part of any, or all Bids and to waive any informalities and irregularities. The Bidder expressly acknowledges this right of the City to reject any or all Bids or to reject any incomplete or irregular Bid. The City will award a single contract for each of the Bid packages listed above, unless it determines to reject one or more Bid packages. Bidders must furnish all information requested. Failure to do so may result in disqualification of the Bid.

d. Determination of the Bidder Submitting the Lowest and Best Bid. Subject to the right of the City to reject any or all Bids, the City will award the Contract for the Work to the Bidder submitting the lowest and best Bid, taking into consideration accepted alternates.

    i. Buy Ohio/American and Ohio Contractor Bid Preference. If selected above, the City shall apply a domestic Ohio bid preference as outlined below.

        1. Bids will first be evaluated to determine that a bidder's offering is for a domestic source end product as defined in 48 CFR Pt. 25.003. Information furnished by the Bidder in its Bid shall be relied upon in making this determination. Any Bidder's offering that does not offer a domestic source end product shall be rejected, except where the City determines that certain articles, materials and supplies are not mined, produced, or

manufactured in the United States in sufficient and reasonably available commercial quantities and of a satisfactory quality.

a. Following the determination as to domestic source end products, remaining bids and proposals shall be evaluated as set forth below, so as to give preference to Ohio bids or bidders who are located in a border state, provided that the border state imposes no greater restrictions than contained in this rule.

2. Buy Ohio Act compliance

a. Where the preliminary analysis of bids identifies the apparent low bid as an Ohio bid or a bid from a border state, the City shall proceed with its standard contract award practices and procedures as set forth in the Instructions to Bidders.

b. Where the preliminary analysis identifies the apparent low bid as one other than an Ohio bid or bid from a border state, the City shall consider the following factors:

i. Whether the goods or services can be procured in-state in sufficient and reasonably available quantities and of a satisfactory quality;

ii. Whether an Ohio bid has been submitted;

iii. Whether the lowest Ohio bid, if any, offers a price to the City deemed to be an excessive price (defined as a price that exceeds by more than five per cent the lowest non-Ohio bid submitted);

iv. Whether the lowest Ohio bid, if any, offers a disproportionately inferior product or service.

c. Where the City determines that selection of the lowest Ohio bid, if any, will not result in an excessive price or disproportionately inferior product or service, the City shall include that Bidder in its lowest and best analysis.

d. Where the City otherwise determines it is advantageous to propose the award of a contract to other than an Ohio bidder or bidder from a border state, the City shall include that Bidder in its lowest and best analysis.

ii. In addition to the forgoing, City may consider the following criteria in determining the lowest and best bidder; and, in its discretion, may consider and give such weight to these criteria as it deems appropriate:

1. Past Contract Performance

a. Whether Bidder has failed to perform a contract within the last five years from the date of Bid submission based on all information

including fully settled disputes or litigation. A fully settled dispute or litigation is one that has been resolved in accordance with the dispute resolution mechanism under the respective contract, and where all appeal instances available to the Bidder have been exhausted.

b. Whether Bidder has failed to sign a contract after submitting a bid security in the past five years.

c. All pending litigation shall in total not represent more than ten percent (10%) of the Bidder's net worth and shall be treated as resolved against the Bidder.

d. Bidder's history of making claims against others or having claims made against it; and, if the Bidder's management operates or has operated another construction company, the work history of that company in determining whether the Bidder submitted the lowest and best Bid.

2. Financial Ability

a. The Bidder's financial ability to complete the Contract successfully and on time without resort to its Surety.

b. Submission of audited financial statements including balance sheets, income statements, and cash flow statements, or other financial statements acceptable to the City, for the last three years to demonstrate the current soundness of the Bidder's financial position and its prospective long term profitability.

i. The Bidder's average coefficient of Current ratio (Current Assets/Current Liabilities) compared to 1. The greater, the better.

ii. The Bidder's average coefficient of Debt ratio (Total Debt/Total Assets) compared to 1. The lesser, the better.

3. Experience

a. Whether the Bidder has experience under contracts in the role required by this Contract for at least the last five years before the Bid submission deadline, and with activity in at least nine months each year.

b. Whether the Bidder has participated as in the role required by this Contract in at least two contracts within the last five years, each with a value of at least 85% of the stated estimate for this Project, that have been successfully and substantially completed and that are similar to the proposed Works. Similarity shall be based on the physical size, complexity, methods, technology or other characteristics as described in the Contract Documents.

c. For the above or other contracts executed during the period stipulated in above, whether the Bidder has experience in the following key activities: ODOT Pre-Qualification for horizonal work listed in scope of project including the reconstruction of the signalized SR 161 / Riverside Drive intersection as a roundabout and 3200 feet of Riverside Drive on new alignment. The reconstruction includes approximately 36,000 feet of granite curb including granite edged planting beds, 82,500 square feet of brick sidewalk, parking areas with permeable pavers, over 400 trees and 94,000 plantings, new street lighting, AEP and Dublink. **A mandatory pre-bid meeting is scheduled for Monday, March 9, 2015 10:30 AM at 5800 Shier-Rings Road, Dublin, OH 43016.**

d. Whether the Bidder has a record of consistent customer satisfaction and of consistent completion of projects, including projects that are comparable to or larger and more complex than the Project, on time and in accordance with the applicable Contract Documents.

e. The Bidder's prior experience on other projects with the CITY OF DUBLIN and with other public owners, including the Bidder's demonstrated ability to complete its work on these projects in accordance with the Contract Documents and on time, and will also consider its ability to work with the City as a willing, cooperative, and successful team member.

4. Whether the Bidder possesses or can obtain sufficient equipment and facilities to complete the Project.

5. The adequacy, in numbers and experience, of the Bidder's work force to complete the Contract successfully and on time.

6. The Bidder's compliance with federal, state, and local laws, rules, and regulations, including but not limited to the Occupational Safety and Health Act, Prevailing Wage laws, and Ethics laws.

7. The Bidder's participation in a drug-free workplace program acceptable to the City, and the Bidder's record for both resolved and unresolved findings of the Auditor of State for recovery as defined in Section 9.24 of the O.R.C..

8. The City's prior experience with the Bidder's surety.

9. The Bidder's interest in the Project as evidenced by its attendance at any pre-Bid meetings or conferences for Bidders.

10. Depending upon the type of the work, other essential factors, as the City may determine and as are included in the Specifications.

11. The foregoing information with respect to each of the Subcontractors and Suppliers that the Bidder intends to use on the Project.

e. With its Bid, the Bidder will complete and submit to the City a completed Contractor's Qualification Statement (using the form included in the Contract Documents), and thereafter will provide the City with such additional information as the City may request regarding the Bidder's qualifications.

f. The failure to submit requested information on a timely basis may result in the determination that the Bidder is not the lowest and best Bidder.

g. With its Bid, the Bidder shall submit a list of proposed subcontractors using the form included with the Contract Documents. Subcontract work shall not total more than **50%** of the Contractor's Contact with the City.

h. The City reserves the right to reject proposed Subcontractors before the Contract is awarded. The Bidder shall replace rejected subcontractors will subcontractors acceptable to the City with no change in the amount of the Bid submitted by the Bidder to City. After approval by the City of the list of proposed Subcontractors, Suppliers, and manufacturers submitted by the successful Bidder, the list shall not be changed unless written approval of the change is authorized by the City. The City reserves the right to reject Subcontractors after the Contract is awarded. In that instance, the City shall only be liable to the Contractor for the difference in Contract Price between the rejected subcontractor and the replacement subcontractor. The Contractor's markup on the replacement subcontractor shall be equal to or less than the markup on the rejected subcontractor contract.

i. With its Bid, the Bidder shall submit a list of supervisory personnel with which it intends to staff the Project indicating their respective roles on the Project. The City reserves the right to reject proposed personnel both before and after the Contract is awarded with no additional cost to the City. Once the personnel list is approved by the City, it shall not be changed without the written consent of the City.

j. No Bidder may withdraw its Bid within sixty (60) days after the date Bids are opened. The City reserves the right to waive any formalities or irregularities or to reject any or all Bids.

k. The City reserves the right to disqualify Bids, before or after opening, upon evidence of collusion with intent to defraud or other illegal practices on the part of the Bidder.

l. By submitting its Bid, the Bidder agrees that the City's determination of which Bidder is the lowest and best Bidder shall be final and conclusive, and that if the Bidder or any person on its behalf challenges such determination in any legal proceeding, the Bidder will indemnify and hold the City and its employees and agents harmless from any claims included or related to such legal proceeding, whether or not proven, and from legal fees and expenses incurred by the City, its employees, or agents that arise out of or are related to such challenge.

m. Award of Contract. The award and execution of the Contract, when required, will only be made pursuant to the legal process applicable to the City for awarding contracts of this nature.

END OF INSTRUCTIONS TO BIDDERS

C. REQUEST FOR INFORMATION (PRE-BID)

CITY OF DUBLIN
SR 161 / RIVERSIDE DRIVE ROUNDABOUT (PART1) AND RIVERSIDE DRIVE REALIGNMENT AND OTHER PUBLIC IMPROVEMENTS (PART 2)

The person, firm, or corporation submitting a request for information shall be responsible for its prompt delivery and do so in a manner that will allow a sufficient period of time for the issuance and delivery of an Addendum before receipt of bids. The CITY OF DUBLIN will not be responsible for any other explanations of the Contract Documents made before the receipt of bids.

Please submit all pre-bid questions in writing by facsimile or electronic mail (Email) to: Mandy K. Bishop, P.E., S.I., 614-453-8707 or e-mailed to mbishop@gpdgroup.com

Company:	Contact Name:
Email:	Phone:
Requested Information:	

D. BID COVERSHEET

BIDDERS SHALL ATTACH THIS FORM AS THE COVERSHEET TO THE BID. USE THE BOXES BELOW TO CHECK YOUR WORK. COMPLETING THIS FORM DOES NOT GUARANTEE THAT YOUR BID WILL BE RESPONSIVE OR SELECTED; BUT, SHOULD HELP TO OVERCOME THE MOST COMMON BIDDER MISTAKES. THE CITY OF DUBLIN, OHIO RESERVES THE RIGHT TO REJECT ANY AND ALL PROPOSALS AND TO WAIVE ANY INFORMALITIES OR IRREGULARITIES IN THE PROPOSALS.

1. Bidder's Company Name: _____

2. Total Bid (From Bid Form): $_____

BID PACKAGE

- ☐ Reviewed in detail?

PROPOSAL

- ☐ Acknowledged any addenda?
- ☐ Total bid amount completed in words and figures?
- ☐ Signed by a person with authority to bind your company?
- ☐ No changes made to form or conditions added?

BID SCHEDULE

- ☐ Completely filled in?

COMBINED BID/PERFORMANCE/PAYMENT BOND

- ☐ Your company name in the Principal blank?
- ☐ Surety name in the Surety blank?
- ☐ Dollar amount should be blank
- ☐ Signed as indicated?

COMBINED DELINQUENT PERSONAL PROPERTY TAX & NONCOLLUSION AFFIDAVIT

- ☐ Filled in?
- ☐ Signed?
- ☐ Notarized?

AFFIDAVIT OF AUTHORITY

- ☐ Needs completed if you are anything other than a sole proprietor
- ☐ Filled in?
- ☐ Signed?
- ☐ Notarized?

POWER OF ATTORNEY (OUT OF STATE CORPORATION)

- ☐ Must have if you are an out of state corporation

LIST OF SUBCONTRACTORS

- ☐ Completed?

LIST OF SUPERVISORY PERSONNEL

- ☐ Completed?

CONTRACTOR QUALIFICATION STATEMENT

- ☐ Completed?

INSURANCE CERTIFICATE

- ☐ Submitted?

WORKERS COMPENSATION COVERAGE

- ☐ Submitted?

W-9 FORM

- ☐ Submitted?

II. BIDDING FORMS

A. PROPOSAL

CITY OF DUBLIN

SR 161 / RIVERSIDE DRIVE ROUNDABOUT (PART1) AND RIVERSIDE DRIVE REALIGNMENT AND OTHER PUBLIC IMPROVEMENTS (PART 2)

_____ (the "Bidder") submits this Proposal having read and examined the contract documents, including but not limited to the Invitation to Bid.

Addenda Number	Date of Receipt
_____	_____
_____	_____
_____	_____

The Bidder proposes to perform all work for the Agreement for Construction in accordance with the contract documents for the following sum:

Total Bid (in figures): $ _____

Total Bid (in words): _____

_____

In the event of a discrepancy between the amount of the total bid as written in figures and in words, the amount written in words shall govern.

Unless otherwise specified in the Bid Document the amount of the total bid is based on the unit prices or lump sum set forth in the Bid Schedule attached hereto and incorporated herein.

The Bidder understands and agrees that all work to be performed under the Agreement for Construction shall be completed by the date or time required by the Contract Documents unless an extension of time is granted by the CITY OF DUBLIN.

Upon failure to have the work completed within the project time, the CITY OF DUBLIN, OHIO shall be entitled to retain or recover from the Bidder, as liquidated damages, and not as a penalty, the amounts set forth in the following table for each and every calendar day until completion. The right of the CITY OF DUBLIN, OHIO to recover liquidated damages shall not substitute for any recovery for additional costs in the event the Bidder fails to complete the Agreement for Construction according to the Contract Documents.

REPRESENTATIONS OF THE BIDDER

The Bidder represents the following:

1. The Bidder has read and understands the Contract Documents and understands that it must comply with all requirements of the Contract Documents, regardless of whether the Bidder has actual knowledge of the requirements and regardless of any statement or omission made by the Bidder that might indicate a contrary intention.

2. The Bid is based upon the items specified by the Contract Documents.

3. The Bidder has visited the site, become familiar with local conditions, and has correlated personal observations about the requirements of the Contract Documents. The Bidder has no outstanding questions regarding the interpretation of the Contract Documents.

4. Within ten (10) business days from the date of receipt the Notice of Intent to Award, the Bidder understands that it must enter into and execute an agreement for CITY OF DUBLIN, SR 161 / RIVERSIDE DRIVE ROUNDABOUT (PART1) AND RIVERSIDE DRIVE REALIGNMENT AND OTHER PUBLIC IMPROVEMENTS (PART 2) PROJECT if awarded based on this proposal. If the Bidder does not execute an agreement for the Project for any reason, the Bidder and the Bidder's surety shall be liable to the CITY OF DUBLIN, OHIO as provided in O.R.C. Section 153.54.

5. Within ten (10) business days of the date of receipt of the Notice of Intent to Award, the Bidder understands that it must submit the following:

   a. Performance Bond. (If combined bid/performance/payment not submitted already).

   b. Copy of Additional Insured Endorsement.

6. The Bidder understands that it must furnish any other information requested by the CITY OF DUBLIN.

The Bidder hereby signs this Proposal on the ___ day of _____, 2015.

If Bidder is an individual, complete the following:

Signature: _____

Print Name: _____

Name of Business: _____

(if different from above)

Federal Identification Number: _____

Address: _____

_____

Telephone: ( ) _____

Fax: ( ) _____

If Bidder is a partnership, complete the following:

Name of Partnership: _____

By: _____

(Signature)

Print Name: _____

Federal Identification Number: _____

Address: _____

_____

Telephone: ( ) _____

Fax: ( ) _____

Names and Addresses of all general partners:

_____

_____

_____

If Bidder is a joint venture, complete the following:

Name of Joint Venture: _____

By: _____

(Signature)

Print Name: _____

Address: _____

_____

Telephone: ( ) _____

Fax: ( ) _____

Complete the following for each firm represented by the joint venture:

1. Name:_____

Federal Identification Number: _____

Address: _____

_____

Telephone: ( ) _____

Fax: ( ) _____

2. Name: _____

Federal Identification Number: _____

Address: _____

_____

Telephone: ( ) _____

Fax: ( ) _____

If Bidder is a corporation, complete the following:

Name of Corporation: _____

By: _____

(Signature)

Print Name: _____

Title: _____

Federal Identification Number: _____

Address: _____

_____

Telephone: ( ) _____

Fax: ( ) _____

State of Incorporation: _____

Names and addresses of Corporate Officers:

_____

_____

_____

If Bidder is an entity other than those described above, complete the following:

Name of Bidder:

By: _____

(Signature)

Print Name: _____

Title: _____

Federal Identification Number: _____

Address: _____

_____

Telephone: ( ) _____

Fax: ( ) _____

Type of Business Entity: _____

Names and addresses of all Principals:

_____

_____

_____

_____

_____

BID SCHEDULE

BIDDER agrees to perform all work described in the CONTRACT DOCUMENTS for the following unit prices:

SR 161 / Riverside Drive Roundabout
Part 1

CITY OF DUBLIN

REF NO.	(1) ITEM	(2) DESCRIPTION	(3) QUANT.	(4) UNIT	(5) LABOR ($)	(6) MATERIAL ($)	(7) (5)+(6) TOTAL ($)	(8) (3) x (7) TOTAL EXTENDED INFORMAL PRICE ($)
		ROADWAY						
1	201	CLEARING AND GRUBBING	1	LUMP				
2	201	TREE REMOVED, 18 INCH SIZE	50	EACH				
3	201	TREE REMOVED, 30 INCH SIZE	14	EACH				
4	201	TREE REMOVED, 48 INCH SIZE	3	EACH				
5	202	CURB REMOVED	3,718	FEET				
6	202	CURB AND GUTTER REMOVED	842	FEET				
7	202	PAVEMENT REMOVED, CONCRETE	68	SQ YD				
8	202	PIPE REMOVED, 24" AND UNDER	1,860	FEET				
9	202	PIPE REMOVED, OVER 24"	1,972	FEET				
10	202	CATCH BASIN REMOVED	35	EACH				
11	202	HEADWALL REMOVED	5	EACH				
12	202	MANHOLE REMOVED	9	EACH				
13	202	WALK REMOVED	2,633	SQ FT				
14	202	STEPS REMOVED	1	LUMP				
15	202	CONCRETE PAD REMOVED	1,016	SQ FT				
16	202	SIGN TRUSS REMOVED	1	EACH				
17	202	GUARDRAIL REMOVED	1,476	FEET				
18	202	FENCE REMOVED	237	FEET				
19	202	CONCRETE MEDIAN REMOVED	261	SQ YD				
20	202	STONE WALL REMOVED	1,795	FEET				
21	202	PULL BOX REMOVED	20	EACH				
22	202	BOULDER REMOVED	3	EACH				
23	202	BOLLARD REMOVED	10	EACH				
24	202	FLAG POLE REMOVED	2	EACH				
25	202	FIRE HYDRANT REMOVED	3	EACH				
26	203	EXCAVATION, AS PER PLAN	9,163	CU YD				
27	203	EMBANKMENT, AS PER PLAN	64,346	CU YD				
28	203	INCREASE OR DECREASE IN EXCAVATION OR EMBANKMENT	5,000	CU YD				
29	204	PROOF ROLLING	8	HOUR				
30	204	SUBGRADE COMPACTION (FOR ROADWAY)	20,804	SQ YD				

BID SCHEDULE

BIDDER agrees to perform all work described in the CONTRACT DOCUMENTS for the following unit prices:

SR 161 / Riverside Drive Roundabout
Part 1

CITY OF DUBLIN

REF NO.	(1) ITEM	(2) DESCRIPTION	(3) QUANT.	(4) UNIT	(5) LABOR ($)	(6) MATERIAL ($)	(7) (5)+(6) TOTAL ($)	(8) (3) x (7) TOTAL EXTENDED INFORMAL PRICE ($)
31	204	SUBGRADE COMPACTION (FOR ASPHALT PATH)	2,508	SQ YD				
32	204	SUBGRADE COMPACTION (FOR DRIVEWAY)	624	SQ YD				
33	204	EXCAVATION OF SUBGRADE	2,000	CU YD				
34	204	GRANULAR EMBANKMENT, NO. 2 STONE	2,000	CU YD				
35	607*	FENCE, MISC.: WOOD FENCE, AS PER PLAN	838	FEET				
36	608	4" CONCRETE WALK, AS PER PLAN	2,924	SQ FT				
37	608	CURB RAMP, AS PER PLAN	17	EACH				
38	608	DETECTABLE WARNING, AS PER PLAN	15	EACH				
39	622*	CONCRETE BARRIER, TYPE C1	497	FEET				
40	SPEC	MONITORING WELL ADJUSTED TO GRADE	3	EACH				
41	SPEC	BACK OF SIDEWALK WALL	1,370	SQ FT				
42	SPEC	STEEL-BACKED TIMBER GUARDRAIL, 9 FOOT POST	170	FEET				
43	SPEC	STEEL-BACKED TIMBER GUARDRAIL TERMINAL SECTION, TYPE SBT FAT-30, 9-FOOT POST	1	EACH				
44	SPEC	BRICK PAVER WALK (INCLUDES SEATING BED, BASE, AND SUBBASE)	19,251	SQ FT				
45	SPEC	BRICK PAVER ROADWAY	181	SQ FT				
46	SPEC	GRANITE PAVER MEDIAN	3,880	SQ FT				
47	SPEC	GRANITE PAVER WALK	218	SQ FT				
48	SPEC	TREE PROTECTION FENCE	188	FEET				
		EROSION CONTROL						
49	207	PERIMETER FILTER FABRIC FENCE	2,974	FEET				
50	207	INLET PROTECTION	44	EACH				
51	207	CONSTRUCTION SEEDING AND MULCHING	35,733	SQ YD				
52	653	TOPSOIL FURNISHED AND PLACED, 3"	980	CU YD				
53	659	SEEDING AND MULCHING, AS PER PLAN	35,733	SQ YD				
54	659	REPAIR SEEDING AND MULCHING, AS PER PLAN	1,787	SQ YD				
55	659	COMMERCIAL FERTILIZER	5	TON				
56	659	WATER	40	M GAL				

BID SCHEDULE

BIDDER agrees to perform all work described in the CONTRACT DOCUMENTS for the following unit prices:

SR 161 / Riverside Drive Roundabout
Part 1

CITY OF DUBLIN

REF NO.	(1) ITEM	(2) DESCRIPTION	(3) QUANT.	(4) UNIT	(5) LABOR ($)	(6) MATERIAL ($)	(7) (5)+(6) TOTAL ($)	(8) (3) x (7) TOTAL EXTENDED INFORMAL PRICE ($)
57	670	SLOPE EROSION PROTECTION MAT, AS PER PLAN	3,540	SQ YD				
58	670	DITCH EROSION PROTECTION MAT, AS PER PLAN	873	SQ YD				
59	SPEC	CONCRETE WASHOUT	1	EACH				
60	SPEC	NO. 2 STONE CHECK DAM	10	CU YD				
							EROSION CONTROL SUBTOTAL =	
		DRAINAGE						
61	509	EPOXY COATED REINFORCING	1,783	LBS				
62	601	ROCK CHANNEL PROTECTION, TYPE A WITH FILTER, AS PER PLAN	44.4	CU YD				
63	601	ROCK CHANNEL PROTECTION, TYPE C WITH FILTER, AS PER PLAN	7.5	CU YD				
64	602	CONCRETE MASONRY	17	CU YD				
65	604	CATCH BASIN (AA-S130)	1	EACH				
66	604	CATCH BASIN (AA-S133A)	3	EACH				
67	604	INLET, AS PER PLAN	39	EACH				
68	604	MANHOLE, TYPE C (AA-S102), AS PER PLAN	16	EACH				
69	604	STORM MANHOLE ADJUSTED TO GRADE	1	EACH				
70	604	STORM MANHOLE RECONSTRUCTED TO GRADE	1	EACH				
71	605	4" PIPE UNDERDRAIN	5,905	FEET				
72	605	4" PIPE UNDERDRAIN, SCH. 80	124	FEET				
73	611*	ODOT CATCH BASIN (CB-2-3)	1	EACH				
74	611*	ODOT CATCH BASIN (CB-2-4)	1	EACH				
75	611*	ODOT MANHOLE, (NO. 3), AS PER PLAN	13	EACH				
76	901	12 INCH PIPE, WITH TYPE 1 BEDDING, 706.02	1,889	FEET				
77	901	12 INCH PIPE, WITH TYPE 1 BEDDING, 150 PSI, 706.02, AS PER PLAN	132	FEET				
78	901	15 INCH PIPE, WITH TYPE 1 BEDDING, 706.02	641	FEET				
79	901	18 INCH PIPE, WITH TYPE 1 BEDDING, 706.02 OR 901.02 ITEM 20 HDPP	332	FEET				

BID SCHEDULE

BIDDER agrees to perform all work described in the CONTRACT DOCUMENTS for the following unit prices:

SR 161 / Riverside Drive Roundabout
Part 1

CITY OF DUBLIN

REF NO.	(1) ITEM	(2) DESCRIPTION	(3) QUANT.	(4) UNIT	(5) LABOR ($)	(6) MATERIAL ($)	(7) (5)+(6) TOTAL ($)	(8) (3) x (7) TOTAL EXTENDED INFORMAL PRICE ($)
80	901	21 INCH PIPE, WITH TYPE 1 BEDDING, 706.02 OR 901.02 ITEM 20 HDPP	108	FEET				
81	901	24 INCH PIPE, WITH TYPE 1 BEDDING, 706.02 OR 901.02 ITEM 20 HDPP	174	FEET				
82	901	27 INCH PIPE, WITH TYPE 1 BEDDING, 706.02 OR 901.02 ITEM 20 HDPP	141	FEET				
83	901	36 INCH PIPE, WITH TYPE 1 BEDDING, 706.02 OR 901.02 ITEM 20 HDPP	228	FEET				
84	901	48 INCH PIPE, WITH TYPE 1 BEDDING, 706.02 OR 901.02 ITEM 20 HDPP	251	FEET				
85	901	54 INCH PIPE, WITH TYPE 1 BEDDING, 706.02 OR 901.02 ITEM 20 HDPP	610	FEET				
86	901	60 INCH PIPE, WITH TYPE 1 BEDDING, 706.02 OR 901.02 ITEM 20 HDPP	801	FEET				
87	901	72 INCH PIPE, WITH TYPE 1 BEDDING, 706.02	70	FEET				
88	SPEC	15 INCH FLARED END SECTION	2	EACH				
89	SPEC	18 INCH FLARED END SECTION	1	EACH				
90	SPEC	36 INCH FLARED END SECTION	1	EACH				
							DRAINAGE SUBTOTAL =	

BID SCHEDULE

BIDDER agrees to perform all work described in the CONTRACT DOCUMENTS for the following unit prices:

SR 161 / Riverside Drive Roundabout
Part 1

CITY OF DUBLIN

REF NO.	(1) ITEM	(2) DESCRIPTION	(3) QUANT.	(4) UNIT	(5) LABOR ($)	(6) MATERIAL ($)	(7) (5)+(6) TOTAL ($)	(8) (3) x (7) TOTAL EXTENDED INFORMAL PRICE ($)
		PAVEMENT						
88	254	PAVEMENT PLANING, ASPHALT CONCRETE (3")	6,822	SQ YD				
89	254	PAVEMENT PLANING, ASPHALT CONCRETE (3.25")	1,634	SQ YD				
90	301	ASPHALT CONCRETE BASE (FOR ROADWAY)	5,116	CU YD				
91	301	ASPHALT CONCRETE BASE (FOR ASPHALT PATH)	191	CU YD				
92	304	AGGREGATE BASE (FOR ROADWAY)	3,468	CU YD				
93	304	AGGREGATE BASE (FOR ASPHALT PATH)	418	CU YD				
94	304	AGGREGATE BASE (FOR DRIVEWAY)	105	CU YD				
95	407	NTSS-1HM TRACKLESS TACK COAT	2,291	GAL				
96	407	NTSS-1HM TRACKLESS TACK COAT FOR INTERMEDIATE COURSE	1,765	GAL				
97	442	ASPHALT SURFACE COURSE, 12.5MM, TYPE A (448)	841	CU YD				
98	442	ASPHALT CONCRETE INTERMEDIATE COURSE, 12.5MM, TYPE A (448)	981	CU YD				
99	448	ASPHALT CONCRETE SURFACE COURSE (MEDIUM TRAFFIC), PG64-22	295	CU YD				
100	448	ASPHALT CONCRETE SURFACE COURSE (MEDIUM TRAFFIC), PG64-22 (FOR ASPHALT PATH)	82	CU YD				
101	448	ASPHALT CONCRETE SURFACE COURSE (MEDIUM TRAFFIC), PG64-22 (FOR DRIVEWAY)	30	CU YD				
102	448	ASPHALT CONCRETE INTERMEDIATE COURSE (MEDIUM TRAFFIC), PG64-22	412	CU YD				
103	448	ASPHALT CONCRETE INTERMEDIATE COURSE (MEDIUM TRAFFIC), PG64-22 (FOR DRIVEWAY)	39	CU YD				
104	452	8" NON-REINFORCED CONCRETE PAVEMENT	119	SQ YD				
105	609	6" CONCRETE COMBINATION CURB AND GUTTER (INCLUDING NO. 57 AGGREGATE BASE)	75	FEET				

BID SCHEDULE

BIDDER agrees to perform all work described in the CONTRACT DOCUMENTS for the following unit prices:

SR 161 / Riverside Drive Roundabout
Part 1

CITY OF DUBLIN

REF NO.	(1) ITEM	(2) DESCRIPTION	(3) QUANT.	(4) UNIT	(5) LABOR ($)	(6) MATERIAL ($)	(7) (5)+(6) TOTAL ($)	(8) (3) x (7) TOTAL EXTENDED INFORMAL PRICE ($)
106	609	GRANITE CURB (18 INCH X 6 INCH)	11,100	FEET				
107	609	GRANITE BAND (15 INCH X 24 INCH)	47	FEET				
108	609	GRANITE MOUNTABLE CURB (16 INCH X 12 INCH)	541	FEET				
109	609	GRANITE PLANTER CURB	2,283	FEET				
110	SPEC	TRUCK APRON PAVEMENT, GRANITE	494	SQ YD				
							PAVEMENT SUBTOTAL =	

BID SCHEDULE

BIDDER agrees to perform all work described in the CONTRACT DOCUMENTS for the following unit prices:

SR 161 / Riverside Drive Roundabout
Part 1

CITY OF DUBLIN

REF NO.	(1) ITEM	(2) DESCRIPTION	(3) QUANT.	(4) UNIT	(5) LABOR ($)	(6) MATERIAL ($)	(7) (5)+(6) TOTAL ($)	(8) (3) x (7) TOTAL EXTENDED INFORMAL PRICE ($)
		WATER WORKS						
111	801	6" DUCTILE IRON WATER PIPE & FITTINGS	145	FEET				
112	801	8" DUCTILE IRON WATER PIPE & FITTINGS	179	FEET				
113	801	12" DUCTILE IRON WATER PIPE & FITTINGS	1,725	FEET				
114	801	24" DUCTILE IRON WATER PIPE & FITTINGS	722	FEET				
115	801	FITTINGS, INCREASE OR DECREASE	3,105	LBS				
116	801	CONCRETE BLOCKING CLASS C, INCREASE OR DECREASE	46	CU YD				
117	802	6" VALVE & APPURTENANCES	5	EACH				
118	802	8" VALVE & APPURTENANCES	1	EACH				
119	802	12" VALVE & APPURTENANCES	4	EACH				
120	802	24" VALVE & APPURTENANCES (BUTTERFLY VALVE)	4	EACH				
121	802	6" VALVE WITH COLUMBUS STANDARD HEAVY DUTY VALVE BOX	5	EACH				
122	802	8" VALVE WITH COLUMBUS STANDARD HEAVY DUTY VALVE BOX	4	EACH				
123	802	12" VALVE WITH COLUMBUS STANDARD HEAVY DUTY VALVE BOX	1	EACH				
124	807	VALVE BOXES ADJUSTED TO GRADE	4	EACH				
125	809	FIRE HYDRANT	7	EACH				
126	811	INCREASE OR DECREASE IN EXCAVATION, IN BACKFILL	70	CU YD				
127	816	8 INCH WATER MAIN ABANDONED	1	EACH				
128	816	12 INCH WATER MAIN ABANDONED	1	EACH				
129	816	16 INCH WATER MAIN ABANDONED	1	EACH				
130	816	24 INCH WATER MAIN ABANDONED	1	EACH				
131	SPEC	6" WATER LINE LOWERING, PER L-7401	1	EACH				
132	SPEC	SURVEY COORDINATES	1	LUMP				
							WATER WORKS SUBTOTAL =	

BID SCHEDULE

BIDDER agrees to perform all work described in the CONTRACT DOCUMENTS for the following unit prices:

SR 161 / Riverside Drive Roundabout
Part 1

CITY OF DUBLIN

REF NO.	(1) ITEM	(2) DESCRIPTION	(3) QUANT.	(4) UNIT	(5) LABOR ($)	(6) MATERIAL ($)	(7) (5)+(6) TOTAL ($)	(8) (3) x (7) TOTAL EXTENDED INFORMAL PRICE ($)
		SANITARY						
133	604	SANITARY MANHOLE RECONSTRUCTED TO GRADE	8	EACH				
134	604	MANHOLE, TYPE C (AA-S102) W/ OUTSIDE DROP PIPE (AA-S110)	1	EACH				
135	901	8 INCH PIPE, 706.02, WITH TYPE 1 BEDDING, WITH CMSC 912 COMPACTED GRANULAR MATERIAL	28	FEET				
							SANITARY SUBTOTAL =	

BID SCHEDULE

BIDDER agrees to perform all work described in the CONTRACT DOCUMENTS for the following unit prices:

SR 161 / Riverside Drive Roundabout
Part 1

CITY OF DUBLIN

REF NO.	(1) ITEM	(2) DESCRIPTION	(3) QUANT.	(4) UNIT	(5) LABOR ($)	(6) MATERIAL ($)	(7) (5)+(6) TOTAL ($)	(8) (3) x (7) TOTAL EXTENDED INFORMAL PRICE ($)
		TRAFFIC CONTROL *						
136	621	RAISED PAVEMENT MARKERS FURNISHED AND INSTALLED	98	EACH				
137	630	GROUND-MOUNTED SUPPORT, NO. 3 POST, TYPE S, AS PER PLAN	762.6	FEET				
138	630	GROUND-MOUNTED SUPPORT ANCHOR POST 2 1/4" SQUARE, AS PER PLAN	61	EACH				
139	630	STREET NAME SIGN SUPPORT, AS PER PLAN	9	EACH				
140	630	STREET NAME SIGN, AS PER PLAN	5	EACH				
141	630	HIGHWAY PLAQUE/DIRECTIONAL SIGN, AS PER PLAN	4	EACH				
142	630	SIGN, FLAT SHEET, AS PER PLAN	407.8	SQ FT				
143	630	SIGN, EXTRUSHEET, AS PER PLAN	633.3	SQ FT				
144	630	RIGID OVERHEAD SIGN SUPPORT FOUNDATION, AS PER PLAN	4	EACH				
145	630	OVERHEAD SIGN SUPPORT, TYPE TC-12.30, DESIGN 10, AS PER PLAN	4	EACH				
146	630	SIGN SUPPORT ASSEMBLY OVERHEAD, AS PER PLAN	4	EACH				
147	630	SIGN SUPPORT ASSEMBLY BRIDGE SUPPORT, TYPE 2, AS PER PLAN	1	EACH				
148	630	SIGNING MISC.: SIGN SUPPORT FOUNDATION, AS PER PLAN	3	EACH				
149	630	REMOVAL OF OVERHEAD SIGN AND DISPOSAL	1	EACH				
150	630	REMOVAL OF OVERHEAD SIGN SUPPORT AND DISPOSAL	2	EACH				
151	630	REMOVAL OF GROUND MOUNTED SIGN AND DELIVERED, AS PER PLAN	75	EACH				
152	630	REMOVAL OF GROUND MOUNTED POST SUPPORT AND DISPOSAL	36	EACH				
153	630	REMOVAL OF POLE MOUNTED SIGN AND DISPOSAL	33	EACH				
154	644	EDGE LINE, WHITE, 4"	0.60	MILE				
155	644	EDGE LINE, WHITE, 12"	0.06	MILE				

BID SCHEDULE

BIDDER agrees to perform all work described in the CONTRACT DOCUMENTS for the following unit prices:

SR 161 / Riverside Drive Roundabout
Part 1

CITY OF DUBLIN

REF NO.	(1) ITEM	(2) DESCRIPTION	(3) QUANT.	(4) UNIT	(5) LABOR ($)	(6) MATERIAL ($)	(7) (5)+(6) TOTAL ($)	(8) (3) x (7) TOTAL EXTENDED INFORMAL PRICE ($)
156	644	EDGE LINE, YELLOW, 4"	0.92	MILE				
157	644	LANE LINE, WHITE, 6"	0.78	MILE				
158	644	CENTER LINE, 4"	0.64	MILE				
159	644	CHANNELIZING LINE, 8"	3,276	FEET				
160	644	STOP LINE, 24"	147	FEET				
161	644	CROSSWALK LINE, 12"	593	FEET				
162	644	CROSSWALK LINE, 12", AS PER PLAN	336	FEET				
163	644	TRANSVERSE LINE, 24"	442	FEET				
164	644	CHEVRON, 24"	203	FEET				
165	644	LANE ARROW, 72"	21	EACH				
166	644	DASHED LINE, WHITE, 12" (3' LONG, 3' GAP)	366	FEET				
167	644	DASHED LINE, WHITE, 8" (2' LONG, 4' GAP)	609	FEET				
168	644	DOTTED LINE, WHITE, 8" (10' LONG, 10' GAP)	234	FEET				
169	644	DOTTED LINE, WHITE, 8" (1.5' LONG, 10' GAP)	219	FEET				
170	647	YIELD LINE, SHARK TOOTH, 2'X3'	54	EACH				
171	647	LANE ARROW, FISH HOOK, 192"	8	EACH				
							*TRAFFIC CONTROL * SUBTOTAL =*	
		TRAFFIC SIGNAL *						
172	614	SPECIAL - WORK ZONE TRAFFIC SIGNAL - COMPLETE	1	EACH				
173	614	SPECIAL - WORK ZONE TRAFFIC SIGNAL - MODIFICATION	1	EACH				
174	625	CONDUIT, 2", 725.051, AS PER PLAN	300	FEET				
175	625	CONDUIT, 3", 725.051, AS PER PLAN	1,080	FEET				
176	625	CONDUIT, 4", 725.051, AS PER PLAN	141	FEET				
177	625	CONDUIT, 6", 725.051, AS PER PLAN	1,296	FEET				
178	625	TRENCH, AS PER PLAN	1,775	FEET				
179	625	PULL BOX, 725.06, 18", AS PER PLAN	3	EACH				
180	625	PULL BOX, 725.06, 32", AS PER PLAN	6	EACH				
181	625	GROUND ROD, AS PER PLAN	1	EACH				

BID SCHEDULE

BIDDER agrees to perform all work described in the CONTRACT DOCUMENTS for the following unit prices:

SR 161 / Riverside Drive Roundabout
Part 1

CITY OF DUBLIN

REF NO.	(1) ITEM	(2) DESCRIPTION	(3) QUANT.	(4) UNIT	(5) LABOR ($)	(6) MATERIAL ($)	(7) (5)+(6) TOTAL ($)	(8) (3) x (7) TOTAL EXTENDED INFORMAL PRICE ($)
182	625	NO. 4 AWG, 600 VOLT DISTRIBUTION CABLE, AS PER PLAN	1,885	FEET				
183	632	PEDESTRIAN SIGNAL HEAD (COUNTDOWN), AS PER PLAN	8	EACH				
184	632	PEDESTRIAN PUSHBUTTON	4	EACH				
185	632	COVERING OF VEHICULAR SIGNAL HEAD	7	EACH				
186	632	COVERING OF PEDESTRIAN SIGNAL HEAD	8	EACH				
187	632	DETECTOR LOOP, AS PER PLAN	11	EACH				
188	632	LOOP DETECTOR TIE IN	2	FEET				
189	632	LOOP DETECTOR UNIT, 4 CHANNEL	1	EACH				
190	632	NO. 12 AWG POLE AND BRACKET CABLE	435	FEET				
191	632	SIGNAL CABLE, 3 CONDUCTOR, NO. 14 AWG, AS PER PLAN	1,005	FEET				
192	632	SIGNAL CABLE, 5 CONDUCTOR, NO. 14 AWG, AS PER PLAN	1,095	FEET				
193	632	SIGNAL CABLE, 7 CONDUCTOR, NO. 14 AWG, AS PER PLAN	2,145	FEET				
194	632	SIGNAL SUPPORT FOUNDATION, AS PER PLAN	1	EACH				
195	632	LOOP DETECTOR LEAD-IN CABLE	4,425	FEET				
196	632	REMOVAL OF TRAFFIC SIGNAL INSTALLATION, AS PER PLAN	2	EACH				
197	632	REUSE OF VEHICULAR SIGNAL HEAD	7	EACH				
198	632	REUSE OF VEHICULAR DETECTOR UNIT	4	EACH				
199	632	REUSE OF COMBINATION SIGNAL SUPPORT	1	EACH				
200	632	REUSE OF PEDESTRIAN PUSHBUTTON	4	EACH				
201	633	REUSE OF CONTROLLER, AS PER PLAN	1	EACH				
202	632	SIGNALIZATION, MISC.: WIRELESS VEHICLE DETECTION SYSTEM	1	LUMP				
203	632	REMOVAL OF FIBER OPTIC CABLE, AS PER PLAN	1	LUMP				
204	804	FIBER OPTIC INTERCONNECT SYSTEM, AS PER PLAN	1	LUMP				
205	816	TEMPORARY VIDEO DETECTION, AS PER PLAN	1	EACH				
							*TRAFFIC SIGNAL * SUBTOTAL =*	

BID SCHEDULE

BIDDER agrees to perform all work described in the CONTRACT DOCUMENTS for the following unit prices:

SR 161 / Riverside Drive Roundabout
Part 1

CITY OF DUBLIN

REF NO.	(1) ITEM	(2) DESCRIPTION	(3) QUANT.	(4) UNIT	(5) LABOR ($)	(6) MATERIAL ($)	(7) (5)+(6) TOTAL ($)	(8) (3) x (7) TOTAL EXTENDED INFORMAL PRICE ($)
		LIGHTING *						
206	625	CONNECTION, FUSED PULL APART	100	EACH				
207	625	CONNECTION, UNFUSED PULL APART	50	EACH				
208	625	CONNECTION, UNFUSED PERMANENT	31	EACH				
209	625	STREET LIGHT POLE, AS PER PLAN (30')	48	EACH				
210	625	STREET LIGHT POLE, AS PER PLAN (35')	6	EACH				
211	625	STREET LIGHT POLE FOUNDATION, AS PER PLAN	46	EACH				
212	625	BRACKET ARM, 6', AS PER PLAN	54	EACH				
213	625	NO. 4 AWG 600 VOLT DISTRIBUTION CABLE	24,810	FEET				
214	625	NO. 12 AWG POLE AND BRACKET CABLE	4,860	FEET				
215	625	CONDUIT, 6", 725.051, AS PER PLAN	1,510	FEET				
216	625	CONDUIT, 3", 725.051, AS PER PLAN	7,295	FEET				
217	625	LUMINAIRE, CONVENTIONAL, 40 LED, TYPE II	24	EACH				
218	625	LUMINAIRE, CONVENTIONAL, 60 LED, TYPE III	23	EACH				
219	625	LUMINAIRE, CONVENTIONAL, 160 LED, TYPE IV	6	EACH				
220	625	TRENCH, AS PER PLAN	5,875	FEET				
221	625	PULL BOX, 18", AS PER PLAN	13	EACH				
222	625	PULL BOX, 27", AS PER PLAN	2	EACH				
223	625	GROUND ROD, AS PER PLAN	48	EACH				
224	625	POWER SERVICE, AS PER PLAN	2	EACH				
225	625	PLASTIC CAUTION TAPE	5,875	FEET				
226	625	LIGHT POLE REMOVED	28	EACH				
227	625	PULL BOX REMOVED	10	EACH				
228	625	LUMINAIRE & BRACKET ARM REMOVED	1	EACH				
229	625	DISCONNECT EXISTING CIRCUIT	2	EACH				
230	625	REMOVAL OF EXISTING POWER SERVICE	1	EACH				
							*LIGHTING * SUBTOTAL =*	
		MAINTENANCE OF TRAFFIC						
231	253	PAVEMENT REPAIR	250	SQ YD				

BID SCHEDULE

BIDDER agrees to perform all work described in the CONTRACT DOCUMENTS for the following unit prices:

SR 161 / Riverside Drive Roundabout
Part 1

CITY OF DUBLIN

REF NO.	(1) ITEM	(2) DESCRIPTION	(3) QUANT.	(4) UNIT	(5) LABOR ($)	(6) MATERIAL ($)	(7) (5)+(6) TOTAL ($)	(8) (3) x (7) TOTAL EXTENDED INFORMAL PRICE ($)
232	254	PAVEMENT PLANING	2,475	SQ YD				
233	407	NTSS-1HM TRACKLESS TACK COAT	125	GAL				
234	407	NTSS-1HM TRACKLESS TACK COAT FOR INTERMEDIATE COURSE	150	GAL				
235	442	ASPHALT SURFACE COURSE, 12.5MM, TYPE A (448)	105	CU YD				
236	442	ASPHALT CONCRETE INTERMEDIATE COURSE, 12.5MM, TYPE A (448)	105	CU YD				
237	614	LAW ENFORCEMENT OFFICER (WITH PATROL CAR) FOR ASSISTANCE DURING CONSTRUCTION OPERATIONS	320	HOURS				
238	614	PORTABLE CHANGEABLE MESSAGE SIGN, AS PER PLAN	140	SIGN MONTH				
239	615	PAVEMENT FOR MAINTAINING TRAFFIC, CLASS A	1,485	SQ YD				
240	616	DUST CONTROL	50	M GAL				
		MAINTENANCE OF TRAFFIC SUBTOTAL =						
		MAINTENANCE OF TRAFFIC (TIM HORTON'S)						
241	202	WALK REMOVED	370	SQ FT				
242	202	CURB REMOVED	70	FEET				
243	202	REMOVAL MISC.: TABLE REMOVED	4	EACH				
244	609	CURB, STRAIGHT 18"	65	FEET				
245	614	BUSINESS ENTRANCE SIGN, AS PER PLAN	2	EACH				
246	614	WORK ZONE EDGELINE, CLASS I	0.05	MILE				
247	614	WORK ZONE ARROW, CLASS I	4	EACH				
248	615	PAVEMENT FOR MAINTAINING TRAFFIC, CLASS B	85	SQ YD				
249	642	REMOVAL OF PAVEMENT MARKING	160	FEET				
		MAINTENANCE OF TRAFFIC (TIM HORTON'S) SUBTOTAL =						
		LANDSCAPING						
250	SPEC	BICYCLE RACK, AS PER PLAN	18	EACH				
251	SPEC	CAST IN PLACE INFIELD WALL, AS PER PLAN	356	FEET				

BID SCHEDULE

BIDDER agrees to perform all work described in the CONTRACT DOCUMENTS for the following unit prices:

SR 161 / Riverside Drive Roundabout
Part 1

CITY OF DUBLIN

REF NO.	(1) ITEM	(2) DESCRIPTION	(3) QUANT.	(4) UNIT	(5) LABOR ($)	(6) MATERIAL ($)	(7) (5)+(6) TOTAL ($)	(8) (3) x (7) TOTAL EXTENDED INFORMAL PRICE ($)
252	SPEC	ARCHITECTURAL PRECAST CONCRETE WALL CAP, AS PER PLAN	356	FEET				
253	SPEC	RELOCATED MEMORIAL, AS PER PLAN	1	EACH				
254	SPEC	12" PLANTING SOIL FURNISHED AND PLACED, AS PER PLAN	6,925	CU YD				
255	SPEC	30" PLANTING SOIL FURNISHED AND PLACED, AS PER PLAN	2,679	CU YD				
256	SPEC	24" STRUCTURAL SOIL FURNISHED AND PLACED, AS PER PLAN	183	CU YD				
257	605	4" PIPE UNDERDRAIN, SCH. 80	9	FEET				
258	661	BULBS- 6" O.C., AS PER PLAN	33,185	EACH				
259	661	BULBS- 9" O.C., AS PER PLAN	14,890	EACH				
260	661	PERENNIALS- #1 @ 1' O.C., AS PER PLAN	4,213	EACH				
261	661	PERENNIALS- #3 @ 2' O.C., AS PER PLAN	2,259	EACH				
262	661	DECIDUOUS SHRUBS #3 @ 4' O.C., AS PER PLAN	998	EACH				
263	661	DECIDUOUS SHADE TREES- 2" CAL., AS PER PLAN	59	EACH				
264	661	DECIDUOUS SHADE TREES- 3" CAL., AS PER PLAN	100	EACH				
265	661	DECIDUOUS SHADE TREES- 4" CAL., AS PER PLAN	28	EACH				
266	661	DECIDUOUS SHADE TREES- 6" CAL., AS PER PLAN	2	EACH				
267	661	DECIDUOUS SHADE TREES- 8" CAL., AS PER PLAN	3	EACH				
268	661	ORNAMENTAL TREES- CLUMP 7'-9', AS PER PLAN	106	EACH				
269	661	ORNAMENTAL TREES- CLUMP 10'-12', AS PER PLAN	27	EACH				
							LANDSCAPING SUBTOTAL =	
		RETAINING WALL NO. 1						
270	203	GRANULAR EMBANKMENT, AS PER PLAN	264	CU YD				
271	503	COFFERDAMS AND EXCAVATION BRACING	1	LUMP				
272	503	UNCLASSIFIED EXCAVATION, INCLUDING ROCK	474	CU YD				
273	509	EPOXY COATED REINFORCING STEEL	23,579	POUND				
274	511	CLASS QC1 CONCRETE WITH QC/QA	220	CU YD				
275	512	SEALING OF CONCRETE SURFACES (NON-EPOXY)	34	SQ YD				
276	512	TYPE 2 WATERPROOFING	12	SQ YD				

BID SCHEDULE

BIDDER agrees to perform all work described in the CONTRACT DOCUMENTS for the following unit prices:

SR 161 / Riverside Drive Roundabout
Part 1

CITY OF DUBLIN

REF NO.	(1) ITEM	(2) DESCRIPTION	(3) QUANT.	(4) UNIT	(5) LABOR ($)	(6) MATERIAL ($)	(7) (5)+(6) TOTAL ($)	(8) (3) x (7) TOTAL EXTENDED INFORMAL PRICE ($)
277	518	6" PERFORATED CORRUGATED PLASTIC PIPE	110	FEET				
278	518	6" NON-PERFORATED CORRUGATED PLASTIC PIPE INCLUDING SPECIALS	21	FEET				
279	601	ROCK CHANNEL PROTECTION, TYPE D WITH FILTER FABRIC	5	CU YD				
280	611	PRECAST REINFORCED CONCRETE OUTLETS	2	EACH				
281	SPEC	STRUCTURE MISC.: MANUFACTURED STONE VENEER	1,021	SQ FT				
282	SPEC	FILTER FABRIC	403	SQ YD				
283	SPEC	RAILING (42" HIGH METAL RAILING)	91	FEET				
							RETAINING WALL NO. 1 SUBTOTAL =	
		RETAINING WALL NO. 2						
284	503	COFFERDAMS AND EXCAVATION BRACING	1	LUMP				
285	503	UNCLASSIFIED EXCAVATION	368	CU YD				
286	509	EPOXY COATED REINFORCING STEEL	7,204	POUND				
287	511	CLASS QC1 CONCRETE WITH QC/QA	125	CU YD				
288	512	TYPE 2 WATERPROOFING	10	SQ YD				
289	516	1/2" PREFORMED EXPANSION JOINT FILLER	11	SQ FT				
290	518	POROUS BACKFILL WITH FILTER FABRIC	62	CU YD				
291	518	6" PERFORATED CORRUGATED PLASTIC PIPE	163	FEET				
292	518	6" NON-PERFORATED CORRUGATED PLASTIC PIPE INCLUDING SPECIALS	62	FEET				
293	SPEC	STRUCTURE MISC.: MANUFACTURED STONE VENEER	1,122	SQ FT				
							RETAINING WALL NO. 2 SUBTOTAL =	
		RETAINING WALL NO. 3						
294	503	COFFERDAMS AND EXCAVATION BRACING	1	LUMP				
295	503	UNCLASSIFIED EXCAVATION	154	CU YD				
296	509	EPOXY COATED REINFORCING STEEL	2,995	POUND				
297	511	CLASS QC1 CONCRETE WITH QC/QA	51	CU YD				
298	512	TYPE 2 WATERPROOFING	4	SQ YD				

BID SCHEDULE

BIDDER agrees to perform all work described in the CONTRACT DOCUMENTS for the following unit prices:

SR 161 / Riverside Drive Roundabout
Part 1

CITY OF DUBLIN

REF NO.	(1) ITEM	(2) DESCRIPTION	(3) QUANT.	(4) UNIT	(5) LABOR ($)	(6) MATERIAL ($)	(7) (5)+(6) TOTAL ($)	(8) (3) x (7) TOTAL EXTENDED INFORMAL PRICE ($)
299	518	POROUS BACKFILL WITH FILTER FABRIC	23	CU YD				
300	518	6" PERFORATED CORRUGATED PLASTIC PIPE	83	FEET				
301	SPEC	STRUCTURE MISC.: MANUFACTURED STONE VENEER	453	SQ FT				
		RETAINING WALL NO. 3 SUBTOTAL =						
		RETAINING WALL NO. 4						
302	503	PILING MISC.: SOLDIER PILES WITH CONCRETE ENCASEMENTS AND LAGGING	186	FEET				
303	509	EPOXY COATED REINFORCING STEEL	3,044	POUND				
304	511	CLASS QC1 CONCRETE WITH QC/QA	28	CU YD				
305	512	CLASS QC1 CONCRETE, SUBSTRUCTURE	7	SQ YD				
306	518	POROUS BACKFILL WITH FILTER FABRIC	7	CU YD				
307	518	6" PERFORATED CORRUGATED PLASTIC PIPE	86	FEET				
308	518	6" NON-PERFORATED CORRUGATED PLASTIC PIPE INCLUDING SPECIALS	68	FEET				
309	518	STRUCTURE MISC.: PREFABRICATED GEOCOMPOSITE DRAINAGE MATERIAL	1	LUMP				
310	SPEC	STRUCTURE MISC.: MANUFACTURED STONE VENEER	829	SQ FT				
		RETAINING WALL NO. 4 SUBTOTAL =						
		BYPASS STAIRCASE						
311	SPEC	WOOD STAIRCASE	1	LUMP				
		BYPASS STAIRCASE SUBTOTAL =						
		AEP DUCT BANK						
312	259	PAVEMENT REPLACEMENT, TYPE I (FOR DUCT BANK)	530	SQ YD				
313	SPEC	2-5" PVC, SCHEDULE 40, CONDUIT CONCRETE ENCASED IN TRENCH WITH CMSC 912 COMPACTED GRANULAR MATERIAL	150	FEET				

BID SCHEDULE

BIDDER agrees to perform all work described in the CONTRACT DOCUMENTS for the following unit prices:

SR 161 / Riverside Drive Roundabout
Part 1

CITY OF DUBLIN

REF NO.	(1) ITEM	(2) DESCRIPTION	(3) QUANT.	(4) UNIT	(5) LABOR ($)	(6) MATERIAL ($)	(7) (5)+(6) TOTAL ($)	(8) (3) x (7) TOTAL EXTENDED INFORMAL PRICE ($)
314	SPEC	2-5" PVC, SCHEDULE 40, CONDUIT CONCRETE ENCASED IN TRENCH WITH CONTROLLED DENSITY FILL, TYPE 2	435	FEET				
315	SPEC	4-5" PVC, SCHEDULE 40, CONDUIT CONCRETE ENCASED IN TRENCH WITH CMSC 912 COMPACTED GRANULAR MATERIAL	35	FEET				
316	SPEC	4-5" PVC, SCHEDULE 40, CONDUIT CONCRETE ENCASED IN TRENCH WITH CMSC 613 FLOWABLE CONTROLLED DENSITY FILL, TYPE 2	470	FEET				
317	SPEC	6-5" PVC, SCHEDULE 40, CONDUIT CONCRETE ENCASED IN TRENCH WITH CMSC 912 COMPACTED GRANULAR MATERIAL	205	FEET				
318	SPEC	6-5" PVC, SCHEDULE 40, CONDUIT CONCRETE ENCASED IN TRENCH WITH CMSC 613 FLOWABLE CONTROLLED DENSITY FILL, TYPE 2	415	FEET				
319	SPEC	9-5" PVC, SCHEDULE 40, CONDUIT CONCRETE ENCASED IN TRENCH WITH CMSC 912 COMPACTED GRANULAR MATERIAL	980	FEET				
320	SPEC	9-5" PVC, SCHEDULE 40, CONDUIT CONCRETE ENCASED IN TRENCH WITH CMSC 613 FLOWABLE CONTROLLED DENSITY FILL, TYPE 2	445	FEET				
321	SPEC	11-5" PVC, SCHEDULE 40, CONDUIT CONCRETE ENCASED IN TRENCH WITH CMSC 912 COMPACTED GRANULAR MATERIAL	135	FEET				
322	SPEC	11-5" PVC, SCHEDULE 40, CONDUIT CONCRETE ENCASED IN TRENCH WITH CMSC 613 FLOWABLE CONTROLLED DENSITY FILL, TYPE 2	85	FEET				
323	SPEC	13-5" PVC, SCHEDULE 40, CONDUIT CONCRETE ENCASED IN TRENCH WITH CMSC 912 COMPACTED GRANULAR MATERIAL	10	FEET				

BID SCHEDULE

BIDDER agrees to perform all work described in the CONTRACT DOCUMENTS for the following unit prices:

SR 161 / Riverside Drive Roundabout
Part 1

CITY OF DUBLIN

REF NO.	(1) ITEM	(2) DESCRIPTION	(3) QUANT.	(4) UNIT	(5) LABOR ($)	(6) MATERIAL ($)	(7) (5)+(6) TOTAL ($)	(8) (3) x (7) TOTAL EXTENDED INFORMAL PRICE ($)
324	SPEC	13-5" PVC, SCHEDULE 40, CONDUIT CONCRETE ENCASED IN TRENCH WITH CMSC 613 FLOWABLE CONTROLLED DENSITY FILL, TYPE 2	75	FEET				
325	SPEC	PRECAST CONCRETE ELECTRIC MANHOLE	6	EACH				
326	SPEC	RISER CONDUITS, COMPLETE	7	EACH				
327	SPEC	INCREASE OR DECREASE IN EXCAVATION	150	CU YD				
							AEP DUCT BANK SUBTOTAL =	
		DUBLINK DUCT BANK						
328	SPEC	1-4" SDR-11 CONDUIT WITH CMSC 912 COMPACTED GRANULAR MATERIAL	55	FEET				
329	SPEC	1-4" SDR-11 CONDUIT WITH CMSC 613 FLOWABLE CONTROLLED DENSITY FILL, TYPE 2	165	FEET				
330	SPEC	2-4" SDR-11 CONDUITS WITH CMSC 613 FLOWABLE CONTROLLED DENSITY FILL, TYPE 2	55	FEET				
331	SPEC	3-4" SDR-11 CONDUITS WITH CMSC 912 COMPACTED GRANULAR MATERIAL	50	FEET				
332	SPEC	3-4" SDR-11 CONDUITS WITH CMSC 613 FLOWABLE CONTROLLED DENSITY FILL, TYPE 2	1,260	FEET				
333	SPEC	4-4" SDR-11 CONDUITS WITH CMSC 912 COMPACTED GRANULAR MATERIAL	150	FEET				
334	SPEC	4-4" SDR-11 CONDUITS WITH CMSC 613 FLOWABLE CONTROLLED DENSITY FILL, TYPE 2	90	FEET				
335	SPEC	COMMUNICATIONS MANHOLE, COMPLETE	2	EACH				
336	SPEC	COMMUNICATIONS HANDHOLE, ADJUST TO GRADE	2	EACH				
							DUBLINK DUCT BANK SUBTOTAL =	

BID SCHEDULE

BIDDER agrees to perform all work described in the CONTRACT DOCUMENTS for the following unit prices:

SR 161 / Riverside Drive Roundabout
Part 1

CITY OF DUBLIN

REF NO.	(1) ITEM	(2) DESCRIPTION	(3) QUANT.	(4) UNIT	(5) LABOR ($)	(6) MATERIAL ($)	(7) (5)+(6) TOTAL ($)	(8) (3) x (7) TOTAL EXTENDED INFORMAL PRICE ($)
		MISCELLANEOUS						
337	614	MAINTAINING TRAFFIC, AS PER PLAN	1	LUMP				
338	619	FIELD OFFICE, TYPE C	18	MONTH				
339	619	FIELD OFFICE, TYPE C (FOR CITY MANAGEMENT TEAM)	18	MONTH				
340	623	CONSTRUCTION LAYOUT STAKES	1	LUMP				
341	624	MOBILIZATION	1	LUMP				
342	SPEC	PROOF SURVEY	1	LUMP				
343	SPEC	PRE-CONSTRUCTION PHOTO DOCUMENTATION	1	LUMP				
344	SPEC	WEBCAM SERVICES	1	LUMP				
345	SPEC	UNDERGROUND ELECTRIC SERVICE FOR ONE WEBCAM	2	EACH				
346	SPEC	UTILITY POLE INSTALLED & REMOVED FOR WEBCAM	2	EACH				
							MISCELLANEOUS SUBTOTAL =	

* DENOTES ODOT CONSTRUCTION AND MATERIAL SPECIFICATIONS (2013 EDITION).
ALL OTHER ITEMS REFERENCE CITY OF COLUMBUS CONSTRUCTION AND MATERIAL SPECIFICATIONS (2012 EDITION.)

GRAND TOTAL = _____

TOTAL BID FOR PROJECT: _____

SUBMITTED BY: (COMPANY) _____

BID SCHEDULE

BIDDER agrees to perform all work described in the CONTRACT DOCUMENTS for the following unit prices:

Riverside Drive Realignment
Part 2

CITY OF DUBLIN

REF NO.	(1) ITEM	(2) DESCRIPTION	(3) QUANT.	(4) UNIT	(5) LABOR ($)	(6) MATERIAL ($)	(7) (5)+(6) TOTAL ($)	(8) (3) x (7) TOTAL EXTENDED INFORMAL PRICE ($)
		ROADWAY						
1	201	CLEARING AND GRUBBING	1	LUMP				
2	202	CONCRETE WALK REMOVED	16,394	SQ FT				
3	202	GUARDRAIL REMOVED	680	FT				
4	202	REMOVAL MISC.: MISCELLANEOUS CONCRETE REMOVED	30	CU YD				
5	202	REMOVAL MISC.: CONCRETE FOUNDATION REMOVED	7	EACH				
6	202	REMOVAL MISC.: LIGHT POLE REMOVED	8	EACH				
7	202	CURB REMOVED	1,728	FT				
7	202	CURB AND GUTTER REMOVED	824	FT				
8	202	FIRE HYDRANT REMOVED	1	EACH				
9	202	VALVE REMOVED	1	EACH				
10	202	BUILDING DEMOLISHED, AS PER PLAN (6570 RIVERSIDE DRIVE)	1	LUMP				
11	202	REMOVAL MISC.: COMMERCIAL SIGN REMOVED	1	EACH				
12	202	MANHOLE REMOVED	4	EACH				
13	202	HEADWALL REMOVED	1	EACH				
14	202	CATCH BASIN REMOVED	20	EACH				
15	202	PIPE REMOVED, 24" AND UNDER	61	FT				
16	202	SPRINKLER SYSTEM REMOVED	1	LUMP				
17	202	DRILLED WATER WELL REMOVED	2	EACH				
18	203	EXCAVATION, AS PER PLAN	30,432	CU YD				
19	203	EMBANKMENT, AS PER PLAN	102,813	CU YD				
20	204	PROOF ROLLING	20	HR				
21	204	SUBGRADE COMPACTION	18,230	SQ YD				
22	204#	EXCAVATION OF SUBGRADE	3,040	CU YD				
23	204#	GRANULAR MATERIAL, TYPE B	1,520	CU YD				
24	204#	GRANULAR MATERIAL, NO. 2 STONE	1,520	CU YD				
25	204#	GEOTEXTILE FABRIC, TYPE D	4,560	SQ YD				
26	861#	GEOGRID FOR SUBGRADE STABILIZATION	4,560	SQ YD				
27	604	MONUMENT ASSEMBLY (MD-03)	5	EACH				
28	608	CONCRETE WALK (T=4")	3,950	SQ FT				

BID SCHEDULE

BIDDER agrees to perform all work described in the CONTRACT DOCUMENTS for the following unit prices:

Riverside Drive Realignment
Part 2

CITY OF DUBLIN

REF NO.	(1) ITEM	(2) DESCRIPTION	(3) QUANT.	(4) UNIT	(5) LABOR ($)	(6) MATERIAL ($)	(7) (5)+(6) TOTAL ($)	(8) (3) x (7) TOTAL EXTENDED INFORMAL PRICE ($)
29	608	ASPHALT CONCRETE WALK	655	SQ FT				
30	452	NON-REINFORCED CONCRETE PAVEMENT (T=6") (FOR COTA BUS STOP)	330	SQ FT				
31	608	CURB RAMP	26	EACH				
32	608	DETECTABLE WARNING, AS PER PLAN	346	SQ FT				
33	901	6 INCH PIPE, SCHEDULE 40 PVC, WITH TYPE 1 BEDDING, WITH COMPACTED GRANULAR BACKFILL (SLEEVE FOR COLUMBIA GAS)	150	LIN FT				
34	SPEC	BRICK PAVER WALK	61,925	SQ FT				
35	SPEC	BRICK PAVER ROADWAY	17,954	SQ FT				
36	SPEC	GRANITE PAVER MEDIAN	443	SQ FT				
37	SPEC	GRANITE PAVER WALK	393	SQ FT				
38	SPEC#	INCREASE OR DECREASE IN EXCAVATION OR EMBANKMENT	10,000	CU YD				
39	SPEC	STEEL-BACKED TIMBER GUARDRAIL, TYPE A	100	FT				
40	SPEC	STEEL-BACKED TIMBER GUARDRAIL, TERMINAL SECTION, TYPE FAT-30	1	EACH				
41	SPEC	STEEL-BACKED TIMBER GUARDRAIL, CONNECTION TO STRUCTURE	1	EACH				
							ROADWAY SUBTOTAL =	
		EROSION CONTROL						
42	207	PERIMETER FILTER FABRIC FENCE	9,047	FT				

BID SCHEDULE

BIDDER agrees to perform all work described in the CONTRACT DOCUMENTS for the following unit prices:

Riverside Drive Realignment
Part 2

CITY OF DUBLIN

REF NO.	(1) ITEM	(2) DESCRIPTION	(3) QUANT.	(4) UNIT	(5) LABOR ($)	(6) MATERIAL ($)	(7) (5)+(6) TOTAL ($)	(8) (3) x (7) TOTAL EXTENDED INFORMAL PRICE ($)
43	207	INLET PROTECTION	41	EACH				
44	207#	CONSTRUCTION SEEDING AND MULCHING	50,550	SQ YD				
45	207	TEMPORARY CONSTRUCTION ENTRANCE (2230)	1	EACH				
46	653	TOPSOIL, FURNISHED AND PLACED	7,340	CU YD				
47	659	SEEDING AND MULCHING, AS PER PLAN	50,550	SQ YD				
48	659	REPAIR SEEDING AND MULCHING, AS PER PLAN	2,530	SQ YD				
49	670	DITCH EROSION PROTECTION, AS PER PLAN	264	SQ YD				
50	670	SLOPE EROSION PROTECTION, AS PER PLAN	4,390	SQ YD				
51	SPEC	ROCK CHECK DAM	16	EACH				
52	SPEC	SEDIMENT TRAP, NO. 1, PHASE 1	1	LUMP				
53	SPEC	SEDIMENT TRAP, NO. 1, PHASE 2	1	LUMP				
54	SPEC	SEDIMENT TRAP, NO. 2, PHASE 1	1	LUMP				
55	SPEC	SEDIMENT TRAP, NO. 2, PHASE 2	1	LUMP				
56	SPEC	SEDIMENT TRAP, NO. 3, PHASE 2	1	LUMP				
57	SPEC	CONCRETE WASHOUT AREA	1	LUMP				
							EROSION CONTROL SUBTOTAL =	

BID SCHEDULE

BIDDER agrees to perform all work described in the CONTRACT DOCUMENTS for the following unit prices:

Riverside Drive Realignment
Part 2

CITY OF DUBLIN

REF NO.	(1) ITEM	(2) DESCRIPTION	(3) QUANT.	(4) UNIT	(5) LABOR ($)	(6) MATERIAL ($)	(7) (5)+(6) TOTAL ($)	(8) (3) x (7) TOTAL EXTENDED INFORMAL PRICE ($)
		DRAINAGE						
58	601	ROCK CHANNEL PROTECTION, TYPE C, GROUTED PER CMSC 601.05	7	CU YD				
59	604	MANHOLE, TYPE C (AA-S102 WITH ST-03)	20	EACH				
60	604	CURB INLET MANHOLE, AS PER PLAN (AA-S142 CASTING AND NEENAH R-3290 CURB BOX, TYPE N)	19	EACH				
61	604	CURB INLET, AS PER PLAN (WITH NEENAH R-3313 CASTING)	14	EACH				
62	604	CURB AND GUTTER INLET, DOUBLE (AA-S125B)	2	EACH				
63	604	CATCH BASIN, STANDARD WITH SIDE INLETS (AA-S134B)	1	EACH				
64	604	MANHOLE, RECONSTRUCTED TO GRADE	1	EACH				
65	604	MANHOLE, ADJUST TO GRADE	2	EACH				
66	604	CATCH BASIN, POLYDRAIN 2610 OR EQUAL, WITH HARRINGBONE GRATE	1	EACH				
67	605	4 INCH PIPE UNDERDRAINS	3,673	FT				
68	611	MANHOLE, ODOT NO. 3, MH-1.2, ST03	9	EACH				
69	611	CATCH BASIN, ODOT NO. 2-5	1	EACH				
70	901	6 INCH PIPE, SCHEDULE 40 PVC, WITH TYPE 1 BEDDING, WITH COMPACTED GRANULAR BACKFILL (SLEEVE FOR UD OUTLETS)	129	FT				
71	901	12 INCH PIPE, 706.02, WITH TYPE 1 BEDDING, WITH CMSC 912 COMPACTED GRANULAR MATERIAL	1,490	FT				
72	901	15 INCH PIPE, 706.02, WITH TYPE 1 BEDDING, WITH CMSC 912 COMPACTED GRANULAR MATERIAL	348	FT				
73	901	18 INCH PIPE, 706.02, OR 901.02 ITEM 20 HDPP WITH TYPE 1 BEDDING, WITH TYPE 1 BEDDING, WITH CMSC 912 COMPACTED GRANULAR MATERIAL	59	FT				

BID SCHEDULE

BIDDER agrees to perform all work described in the CONTRACT DOCUMENTS for the following unit prices:

Riverside Drive Realignment
Part 2

CITY OF DUBLIN

REF NO.	(1) ITEM	(2) DESCRIPTION	(3) QUANT.	(4) UNIT	(5) LABOR ($)	(6) MATERIAL ($)	(7) (5)+(6) TOTAL ($)	(8) (3) x (7) TOTAL EXTENDED INFORMAL PRICE ($)
74	901	21 INCH PIPE, 706.02, OR 901.02 ITEM 20 HDPP WITH TYPE 1 BEDDING, WITH TYPE 1 BEDDING, WITH CMSC 912 COMPACTED GRANULAR MATERIAL	17	FT				
75	901	24 INCH PIPE, 706.02, OR 901.02 ITEM 20 HDPP WITH TYPE 1 BEDDING, WITH TYPE 1 BEDDING, WITH CMSC 912 COMPACTED GRANULAR MATERIAL	950	FT				
76	901	30 INCH PIPE, 706.02, OR 901.02 ITEM 20 HDPP WITH TYPE 1 BEDDING, WITH TYPE 1 BEDDING, WITH CMSC 912 COMPACTED GRANULAR MATERIAL	245	FT				
77	901	36 INCH PIPE, 706.02, OR 901.02 ITEM 20 HDPP WITH TYPE 1 BEDDING, WITH TYPE 1 BEDDING, WITH CMSC 912 COMPACTED GRANULAR MATERIAL	411	FT				
78	901	36 INCH PIPE, 706.02, OR 901.02 ITEM 20 HDPP WITH TYPE 1 BEDDING, WITH TYPE 1 BEDDING, WITH CMSC 911 COMPACTED BACKFILL	141	FT				
79	901	42 INCH PIPE, 706.02, OR 901.02 ITEM 20 HDPP WITH TYPE 1 BEDDING, WITH TYPE 1 BEDDING, WITH CMSC 912 COMPACTED GRANULAR MATERIAL	343	FT				
80	901	48 INCH PIPE, 706.02, OR 901.02 ITEM 20 HDPP WITH TYPE 1 BEDDING, WITH TYPE 1 BEDDING, WITH CMSC 912 COMPACTED GRANULAR MATERIAL	556	FT				
81	901	45 INCH x29 INCH PIPE, 706.04, WITH TYPE 1 BEDDING, WITH CMSC 912 COMPACTED GRANULAR MATERIAL	84	FT				
82	SPEC	DETENTION OUTLET CHAMBER	11	EACH				
83	SPEC	FLARED CONCRETE END SECTION	2	EACH				
84	SPEC	CONCRETE CRADLE	2	EACH				
							DRAINAGE SUBTOTAL =	

BID SCHEDULE

BIDDER agrees to perform all work described in the CONTRACT DOCUMENTS for the following unit prices:

Riverside Drive Realignment
Part 2

CITY OF DUBLIN

REF NO.	(1) ITEM	(2) DESCRIPTION	(3) QUANT.	(4) UNIT	(5) LABOR ($)	(6) MATERIAL ($)	(7) (5)+(6) TOTAL ($)	(8) (3) x (7) TOTAL EXTENDED INFORMAL PRICE ($)
		PAVEMENT						
85	204	GEOTEXTILE FABRIC, TYPE D (FOR PERMEABLE PAVEMENT)	6,456	SQ YD				
86	254	PAVEMENT PLANING (T=1.25")	3,130	SQ YD				
87	259	PAVEMENT REPLACEMENT, TYPE I	63	SQ YD				
88	259#	PAVEMENT REPLACEMENT, TYPE V	63	SQ YD				
89	301	ASPHALT CONCRETE BASE	4,090	CU YD				
90	301	ASPHALT CONCRETE BASE (FOR SHARED USE PATH)	70	CU YD				
91	304	AGGREGATE BASE	2,830	CU YD				
92	304	AGGREGATE BASE (FOR SHARED USE PATH)	130	CU YD				
93	304	AGGREGATE BASE (FOR COTA BUS STOP ADA LANDING PADS)	7	CU YD				
94	407	NTSS-1HM TRACKLESS TACK COAT	1,360	GAL				
95	407	NTSS-1HM TRACKLESS TACK COAT (FOR RESURFACING)	260	GAL				
96	407	NTSS-1HM TRACKLESS TACK COAT FOR INTERMEDIATE COURSE	1,020	GAL				
97	423	CRACK SEALING, TYPE III	100	LB				
98	448	ASPHALT CONCRETE INTERMEDIATE COURSE (MEDIUM TRAFFIC), PG64-22	830	CU YD				
99	448	ASPHALT CONCRETE SURFACE COURSE (MEDIUM TRAFFIC), PG64-22	590	CU YD				
100	448	ASPHALT CONCRETE SURFACE COURSE (MEDIUM TRAFFIC), PG64-22 (FOR RESURFACING)	110	CU YD				
101	448	ASPHALT CONCRETE SURFACE COURSE (MEDIUM TRAFFIC), PG64-22 (FOR SHARED USE PATH)	60	CU YD				
102	609	COMBINATION CURB AND GUTTER (RD-02)	189	FT				
103	609	GRANITE CURB (18 INCH X 6 INCH)	9,769	FT				
104	609	GRANITE BAND (12 INCH X 6 INCH)	3,930	FT				
105	609	GRANITE BAND (15 INCH X 24 INCH)	1,101	FT				
106	609	GRANITE PLANTER CURB (6-1/4 INCH X 6 INCH)	3,453	FT				
107	609	GRANITE PLANTER CURB (6-1/4 INCH X 12 INCH)	443	FT				

BID SCHEDULE

BIDDER agrees to perform all work described in the CONTRACT DOCUMENTS for the following unit prices:

Riverside Drive Realignment
Part 2

CITY OF DUBLIN

REF NO.	(1) ITEM	(2) DESCRIPTION	(3) QUANT.	(4) UNIT	(5) LABOR ($)	(6) MATERIAL ($)	(7) (5)+(6) TOTAL ($)	(8) (3) x (7) TOTAL EXTENDED INFORMAL PRICE ($)
108	609	GRANITE PLANTER CURB (6-1/4 INCH X 30 INCH)	70	FT				
109	609	GRANITE PLANTER CURB (22 INCH X 6 INCH)	202	FT				
110	SPEC	PERMEABLE PAVER ROADWAY	2,370	SQ YD				
111	SPEC	PERVIOUS CONCRETE BASE, AS PER SUPPLEMENTAL SPECIFICATION PROPOSAL NOTE (T=8")	2,370	SQ YD				
112	SPEC	AGGREGATE BASE (NO. 57 STONE)	1,143	CU YD				
113	SPEC	AGGREGATE BASE (NO. 2 STONE)	2,058	CU YD				
114	SPEC	GEOGRID (FOR PERMEABLE PAVEMENT)	4,065	SQ YD				
							PAVEMENT SUBTOTAL =	

BID SCHEDULE

BIDDER agrees to perform all work described in the CONTRACT DOCUMENTS for the following unit prices:

Riverside Drive Realignment
Part 2

CITY OF DUBLIN

REF NO.	(1) ITEM	(2) DESCRIPTION	(3) QUANT.	(4) UNIT	(5) LABOR ($)	(6) MATERIAL ($)	(7) (5)+(6) TOTAL ($)	(8) (3) x (7) TOTAL EXTENDED INFORMAL PRICE ($)
		WATER WORKS						
115	801	6 INCH WATER PIPE & FITTINGS WITH TYPE 1 BEDDING, WITH ITEM 912 COMPACTED GRANULAR BACKFILL	74	LF				
116	801	8 INCH WATER PIPE & FITTINGS WITH TYPE 1 BEDDING, WITH ITEM 912 COMPACTED GRANULAR BACKFILL	326	LF				
117	801	12 INCH WATER PIPE & FITTINGS WITH TYPE 1 BEDDING, WITH ITEM 912 COMPACTED GRANULAR BACKFILL	2,025	LF				
118	801#	CONCRETE BLOCKING CLASS C, INCREASE OR DECREASE	25	CU YD				
119	801#	DUCTILE IRON FITTINGS, INCREASE OR DECREASE	50	LB				
120	802	6" VALVE AND APPURTENANCES	8	EACH				
121	802	8" VALVE AND APPURTENANCES	8	EACH				
122	802	12" VALVE AND APPURTENANCES	7	EACH				
123	807	COLUMBUS STANDARD HEAVY DUTY VALVE BOX	23	EACH				
124	807	VALVE BOX, ADJUSTED TO GRADE	2	EACH				
125	809	FIRE HYDRANT, TYPE A, AS PER PLAN	7	EACH				
126	811#	INCREASE OR DECREASE IN EXCAVATION AND BACKFILL	50	CU YD				
127	SPEC	SURVEY COORDINATES	1	LUMP				
							WATER WORKS SUBTOTAL =	
		SANITARY						
128	604	MANHOLE, RECONSTRUCTED TO GRADE	7	EACH				
129	604	MANHOLE, ADJUSTED TO GRADE	2	EACH				
							SANITARY SUBTOTAL =	
		PROPOSED SANITARY SEWER FOR RIVERSIDE DRIVE REALIGNMENT (14-012-CIP)						
130	201	CLEARING AND GRUBBING	1	LUMP				
131	202	MANHOLE REMOVED	2	EACH				
132	202	PIPE REMOVED	81	LF				

BID SCHEDULE

BIDDER agrees to perform all work described in the CONTRACT DOCUMENTS for the following unit prices:

Riverside Drive Realignment
Part 2

CITY OF DUBLIN

REF NO.	(1) ITEM	(2) DESCRIPTION	(3) QUANT.	(4) UNIT	(5) LABOR ($)	(6) MATERIAL ($)	(7) (5)+(6) TOTAL ($)	(8) (3) x (7) TOTAL EXTENDED INFORMAL PRICE ($)
133	604	SANITARY MANHOLE (AA-S102)	8	EACH				
134	604	EXISTING SANITARY MANHOLE TO BE CORED AND BOOTED	3	EACH				
135	659	SEEDING AND MULCHING	1,270	SY				
136	901	8-INCH SANITARY SEWER PIPE, WITH TYPE 1 BEDDING WITH ITEM 912 COMPACTED GRANULAR BACKFILL	73	LF				
137	901	15-INCH SANITARY SEWER PIPE, WITH TYPE 1 BEDDING WITH ITEM 911 COMPACTED BACKFILL	125	LF				
138	901	15-INCH SANITARY SEWER PIPE, WITH TYPE 1 BEDDING WITH ITEM 912 COMPACTED GRANULAR BACKFILL	564	LF				
139	903	ROCK EXCAVATION WHERE THE CONTRACTOR CANNOT USE EXPLOSIVES	1,069	CY				
140	909	STEEL CASING PIPE PER 906.06 (OPEN-CUT INSTALLATION)	80	LF				
		PROPOSED SANITARY SEWER FOR RIVERSIDE DRIVE REALIGNMENT (14-012-CIP) SUBTOTAL=						
		PEDESTRIAN UNDERPASS						
141	203*	GRANULAR MATERIAL, TYPE B	289	CU YD				
142	304*	AGGREGATE BASE	63	CU YD				
143	503*	UNCLASSIFIED EVACUATION	2,288	CU YD				
144	509*	EPOXY COATED REINFORCING STEEL	42,305	LBS				
145	511*	CLASS QC1 CONCRETE, AS PER PLAN	157	CU YD				
146	511*	CLASS QC1, FOOTING	252	CU YD				
147	512*	TYPE 2 WATERPROOFING	329	SQ YD				
148	512*	TYPE 3 WATERPROOFING	290	SQ YD				

BID SCHEDULE

BIDDER agrees to perform all work described in the CONTRACT DOCUMENTS for the following unit prices:

Riverside Drive Realignment
Part 2

CITY OF DUBLIN

REF NO.	(1) ITEM	(2) DESCRIPTION	(3) QUANT.	(4) UNIT	(5) LABOR ($)	(6) MATERIAL ($)	(7) (5)+(6) TOTAL ($)	(8) (3) x (7) TOTAL EXTENDED INFORMAL PRICE ($)
149	516*	1/2" PREFORMED EXPASION JOINT FILLER	144	SQ FT				
150	516*	1" PERFORMED EXPANSION JOINT FILLER	104	SQ FT				
151	518*	POROUS BACKFILL WITH FILTER FABRIC	369	CU YD				
152	518*	6" PERFORATED CORRUGATED PLASTIC PIPE	544	LF				
153	518*	6" NON-PERFORATED CORRUGATED PLASTIC PIPE	13	LF				
154	608*	6" CONCRETE WALK	2,016	SQ FT				
155	608*	CONCRETE STEPS, MISC: DECORATIVE STEP BASE	998	LF				
156	611*	CONDUIT, TYPE A, PRECAST REINFORCED COCRETE ARCH SECTIONS: 14' SPAN X 11' RISE	144	LF				
157	613*	LOW STRENGTH MORTAR BACKFILL	118	CU YD				
158	SPEC	BRICK PAVER WALK	408	SQ FT				
							PEDESTRIAN UNDERPASS SUBTOTAL =	
		TRAFFIC CONTROL						
159	614*	CONSTRUCTION BARREL	34	EACH				
160	614*	TYPE 3 BARRICADE	3	EACH				
161	630*	GROUND MOUNTED STRUCTURAL WAYFINDING SUPPORT FOUNDATION, AS PER PLAN	5	EACH				
162	630*	GROUND MOUNTED SUPPORT, NO. 3 POST, TYPE S, AS PER PLAN	910	LF				
163	630*	2 1/4" SQUARE ANCHOR POST, AS PER PLAN	65	EACH				
164	630*	STREET NAME SIGN SUPPORT, AS PER PLAN	3	EACH				
165	630*	STREET NAME SIGN, AS PER PLAN	6	EACH				
166	630*	SIGN, FLAT SHEET, AS PER PLAN	307	SQ FT				
167	630*	WOOD POST, 4"x4", WHITE	3	EACH				

BID SCHEDULE

BIDDER agrees to perform all work described in the CONTRACT DOCUMENTS for the following unit prices:

Riverside Drive Realignment
Part 2

CITY OF DUBLIN

REF NO.	(1) ITEM	(2) DESCRIPTION	(3) QUANT.	(4) UNIT	(5) LABOR ($)	(6) MATERIAL ($)	(7) (5)+(6) TOTAL ($)	(8) (3) x (7) TOTAL EXTENDED INFORMAL PRICE ($)
168	630*	SIGN SUPPORT ASSEMBLY, POLE MOUNTED, AS PER PLAN	3	EACH				
169	630*	REMOVAL OF GROUND MOUNTED SUPPORT AND DISPOSAL	20	EACH				
170	630*	REMOVAL OF GROUND MOUNTED SIGN AND STORAGE	16	EACH				
171	630*	REMOVAL OF GROUND MOUNTED SIGN AND REERECTION	2	EACH				
172	644*	EDGE LINE, 4"	1.5	MILE				
173	644*	LANE LINE, 4"	1.1	MILE				
174	644*	CENTER LINE, 4"	0.3	MILE				
175	644*	CHANNELIZING LINE, 8"	2,531	LF				
176	644*	STOP LINE, 24"	266	LF				
177	644*	TRANSVERSE LINE, 12"	494	LF				
178	644*	DOTTED LINE, 4"	25	LF				
179	644*	LANE ARROW, 72"	20	EACH				
							TRAFFIC CONTROL SUBTOTAL =	
		TRAFFIC SIGNAL						
180	625*	CONDUIT, 4", 725.051.	106	LF				
181	625*	CONDUIT, 3", 725.051.	6,994	LF				
182	625*	CONDUIT, 2", 725.051	293	LF				
183	625*	CONDUIT, SCH 80, 6", 725.05, AS PER PLAN	6,879	LF				
184	625*	CONDUIT RISER, 3", SCH 80	3	EACH				
185	625*	TRENCH, AS PER PLAN	4,513	LF				
186	625*	PULL BOX, 725.07, 18", AS PER PLAN	12	EACH				
187	625*	PULL BOX, 725.07, 36", AS PER PLAN	1	EACH				
188	625*	PULL BOX, 725.08, 27", AS PER PLAN	2	EACH				
189	625*	PULL BOX, 725.08, 32", AS PER PLAN	12	EACH				
190	625*	GROUND ROD, AS PER PLAN	16	EACH				
191	625*	NO. 4 AWG, 600 VOLT DISTRIBUTION CABLE, AS PER PLAN	1,068	LF				

BID SCHEDULE

BIDDER agrees to perform all work described in the CONTRACT DOCUMENTS for the following unit prices:

Riverside Drive Realignment
Part 2

CITY OF DUBLIN

REF NO.	(1) ITEM	(2) DESCRIPTION	(3) QUANT.	(4) UNIT	(5) LABOR ($)	(6) MATERIAL ($)	(7) (5)+(6) TOTAL ($)	(8) (3) x (7) TOTAL EXTENDED INFORMAL PRICE ($)
192	625*	NO. 8 AWG, 600 VOLT DISTRIBUTION CABLE, AS PER PLAN	1,556	LF				
193	625*	NO. 12 AWG, POLE AND BRACKET CABLE	560	LF				
194	625*	CONNECTION, FUSED PULL APART	8	EACH				
195	625*	CONNECTION, UNFUSTED PULL APART	16	EACH				
196	625*	LUMINAIRE, LED, 120 VOLT, AS PER PLAN	8	EACH				
197	625*	BRACKET ARM, 6', AS PER PLAN	8	EACH				
198	630*	SIGN, SINGLE FACED, ILLUMINATED STREET NAME, AS PER PLAN	6	EACH				
199	630*	SIGN, FLAT SHEET, AS PER PLAN	34	SQ FT				
200	630*	SIGN HANGER ASSEMBLY, MAST ARM MOUNTED, AS PER PLAN	3	EACH				
201	630*	SIGN SUPPORT ASSEMBLY, POLE MOUNTED, AS PER PLAN	8	EACH				
202	632*	VEHICULAR SIGNAL HEAD, LED, 3-SECTION, 12-INCH LENS, 1-WAY, AS PER PLAN	13	EACH				
203	632*	VEHICULAR SIGNAL HEAD, LED, 4-SECTION, 12-INCH LENS, 1-WAY, AS PER PLAN	2	EACH				
204	632*	VEHICULAR SIGNAL HEAD, LED, 5-SECTION, 12-INCH LENS, 1-WAY, AS PER PLAN	4	EACH				
205	632*	PEDESTRIAN SIGNAL HEAD, AS PER PLAN	12	EACH				
206	632*	PEDESTRIAN PUSHBUTTON, AS PER PLAN	12	EACH				
207	632*	COVERING OF VEHICULAR SIGNAL HEAD	19	EACH				
208	632*	COVERING OF PEDESTRIAN SIGNAL HEAD	12	EACH				
209	632*	COVERING OF PEDESTRIAN PUSHBUTTON	12	EACH				
210	632*	DETECTOR LOOP, AS PER PLAN	23	EACH				
211	632*	SIGNAL SUPPORT FOUNDATION, AS PER PLAN	8	EACH				
212	632*	PEDESTAL FOUNDATION, AS PER PLAN	4	EACH				
213	632*	PEDESTAL SUPPORT, 11', TRANSFORMER BASE, AS PER PLAN	1	EACH				
214	632*	PEDESTAL SUPPORT, 19', TRANSFORMER BASE, AS PER PLAN	3	EACH				

BID SCHEDULE

BIDDER agrees to perform all work described in the CONTRACT DOCUMENTS for the following unit prices:

Riverside Drive Realignment
Part 2

CITY OF DUBLIN

REF NO.	(1) ITEM	(2) DESCRIPTION	(3) QUANT.	(4) UNIT	(5) LABOR ($)	(6) MATERIAL ($)	(7) (5)+(6) TOTAL ($)	(8) (3) x (7) TOTAL EXTENDED INFORMAL PRICE ($)
215	632*	COMBINATION SIGNAL SUPPORT, TYPE TC-81.21, DESIGN 2, AS PER PLAN	1	EACH				
216	632*	COMBINATION SIGNAL SUPPORT, TYPE TC-81.21, DESIGN 4, AS PER PLAN	2	EACH				
217	632*	COMBINATION SIGNAL SUPPORT, TYPE TC-81.21, DESIGN 11, AS PER PLAN	1	EACH				
218	632*	COMBINATION SIGNAL SUPPORT, TYPE TC-81.21, DESIGN 12, AS PER PLAN	1	EACH				
219	632*	COMBINATION SIGNAL SUPPORT, TYPE TC-81.21, DESIGN 13, AS PER PLAN	3	EACH				
220	632*	WOOD POLE	2	EACH				
221	632*	SIGNAL CABLE, 7-CONDUCTOR, NO. 14, AWG, AS PER PLAN	3,974	LF				
222	632*	SIGNAL CABLE, 5-CONDUCTOR, NO. 14, AWG, AS PER PLAN	2,426	LF				
223	632*	SIGNAL CABLE, 3-CONDUCTOR, NO. 14, AWG, AS PER PLAN	1,335	LF				
224	632*	SIGNAL CABLE, 3-CONDUCTOR, NO. 10, AWG, (FOR PHOTO CELL)	320	LF				
225	632*	LOOP DETECTOR LEAD-IN CABLE	9,697	LF				
226	632*	POWER CABLE, 3-CONDUCTOR, CU #6 AWG, AS PER PLAN	476	LF				
227	632*	SERVICE CABLE, 3-CONDUCTOR, CU #6 AWG, AS PER PLAN	285	LF				
228	632*	POWER SERVICE, AS PER PLAN	3	EACH				
229	632*	REMOVAL OF TRAFFIC SIGNAL INSTALLATION, AS PER PLAN	2	EACH				
230	632*	REMOVAL OF FIBER OPTIC CABLE, AS PER PLAN	1	LUMP				

BID SCHEDULE

BIDDER agrees to perform all work described in the CONTRACT DOCUMENTS for the following unit prices:

Riverside Drive Realignment
Part 2

CITY OF DUBLIN

REF NO.	(1) ITEM	(2) DESCRIPTION	(3) QUANT.	(4) UNIT	(5) LABOR ($)	(6) MATERIAL ($)	(7) (5)+(6) TOTAL ($)	(8) (3) x (7) TOTAL EXTENDED INFORMAL PRICE ($)
231	633*	CABINET FOUNDATION, AS PER PLAN	2	EACH				
232	633*	CONTROLLER WORK PAD, AS PER PLAN	2	EACH				
233	633*	EMERGENCY VEHICLE PREEMPTION, AS PER PLAN	2	EACH				
234	633*	CONTROLLER UNIT TS2/A2 WITH CABINET TYPE TS-1, AS PER PLAN	2	EACH				
235	633*	UNINTERRUPTABLE POWER SUPPLY (UPS), 1000 WATT, AS PER PLAN	2	EACH				
236	804*	TEMPORARY FIBER OPTIC INTERCONNECT SYSTEM, AS PER PLAN	1	LUMP				
237	804*	FIBER OPTIC INTERCONNECT SYSTEM, AS PER PLAN	1	LUMP				
238	816*	TEMPORARY VIDEO DETECTION SYSTEM, AS PER PLAN	4	EACH				
239	614*	SPECIAL - WORK ZONE TRAFFIC SIGNAL - COMPLETE	1	EACH				
240	614*	SPECIAL - WORK ZONE TRAFFIC SIGNAL - MODIFICAITON	2	EACH				
							TRAFFIC SIGNAL SUBTOTAL =	
		LIGHTING						
241	625*	CONNECTOR KIT, TYPE II	92	EACH				
242	625*	CONNECTOR KIT, TYPE III	46	EACH				
243	625*	CABLE SPLICE KITS	9	EACH				
244	625*	STREET LIGHT POLE, AS PER PLAN	36	EACH				
245	625*	STREET LIGHT POLE, AS PER PLAN (FURNISH ONLY)	4	EACH				
246	625*	POST TOP LIGHT POLE, AS PER PLAN	10	EACH				
247	625*	POST TOP LIGHT POLE, AS PER PLAN (FURNISH ONLY)	2	EACH				
248	625*	LIGHT POLE FOUNDATION, AS PER PLAN	46	EACH				
249	625*	NO. 4 AWG, 600 VOLT DISTRIBUTION CABLE	19,758	LF				
250	625*	NO. 12 AWG, POLE AND BRACKET CABLE	2,998	LF				
251	625*	CONDUIT, 3", 725.051	6,004	LF				
252	625*	CONDUIT, 6", 725.051, SCH. 80	351	LF				
253	625*	LUMINAIRE, CONVENTIONAL, TYPE 2, AS PER PLAN	6	EACH				

BID SCHEDULE

BIDDER agrees to perform all work described in the CONTRACT DOCUMENTS for the following unit prices:

Riverside Drive Realignment
Part 2

CITY OF DUBLIN

REF NO.	(1) ITEM	(2) DESCRIPTION	(3) QUANT.	(4) UNIT	(5) LABOR ($)	(6) MATERIAL ($)	(7) (5)+(6) TOTAL ($)	(8) (3) x (7) TOTAL EXTENDED INFORMAL PRICE ($)
254	625*	LUMINAIRE, CONVENTIONAL, TYPE 2, AS PER PLAN (FURNISH ONLY)	2	EACH				
255	625*	LUMINAIRE, CONVENTIONAL, TYPE 3, AS PER PLAN	30	EACH				
256	625*	LUMINAIRE, CONVENTIONAL, TYPE 3, AS PER PLAN (FURNISH ONLY)	4	EACH				
257	625*	LUMINAIRE, POST TOP, AS PER PLAN	10	EACH				
258	625*	LUMINAIRE, POST TOP, AS PER PLAN (FURNISH ONLY)	2	EACH				
259	625*	LUMINAIRE, TUNNEL, AS PER PLAN	6	EACH				
260	625*	LUMINAIRE, TUNNEL, AS PER PLAN (FURNISH ONLY)	2	EACH				
261	625*	LUMINAIRE, WALL, AS PER PLAN	24	EACH				
262	625*	LUMINAIRE, WALL, AS PER PLAN (FURNISH ONLY)	4	EACH				
263	625*	EXISTING SYSTEM REMOVAL	1	LUMP				
264	625*	TRENCH, AS PER PLAN	5,991	LF				
265	625*	PLASTIC CAUTION TAPE	5,991	LF				
266	625*	PULL BOX, AS PER PLAN	14	EACH				
267	625*	PULL BOX RELOCATED, AS PER PLAN	6	EACH				
268	625*	GROUND ROD	46	EACH				
269	625*	POWER SERVICE, AS PER PLAN	1	EACH				
270	625*	SERVICE TO TUNNEL LIGHTING, AS PER PLAN	1	EACH				
271	625*	CADWELD CONNECTION	46	EACH				
272	625*	HIGH VOLTAGE TEST	1	LUMP				
273	625*	CONDUIT RISER, 3", 725.051, SCH. 80	1	EACH				
							LIGHTING SUBTOTAL =	
		AEP DUCT BANK						
274	SPEC	2-5 INCH PVC, SCHEDULE 40, CONDUIT CONCRETE ENCASED IN TRENCH WITH CMSC 912 COMPACTED GRANULAR MATERIAL	48	FT				
275	SPEC	4-5 INCH PVC, SCHEDULE 40, CONDUIT CONCRETE ENCASED IN TRENCH WITH CMSC 912 COMPACTED GRANULAR MATERIAL	102	FT				

BID SCHEDULE

BIDDER agrees to perform all work described in the CONTRACT DOCUMENTS for the following unit prices:

Riverside Drive Realignment
Part 2

CITY OF DUBLIN

REF NO.	(1) ITEM	(2) DESCRIPTION	(3) QUANT.	(4) UNIT	(5) LABOR ($)	(6) MATERIAL ($)	(7) (5)+(6) TOTAL ($)	(8) (3) x (7) TOTAL EXTENDED INFORMAL PRICE ($)
276	SPEC	4-5 INCH PVC, SCHEDULE 40, CONDUIT CONCRETE ENCASED IN TRENCH WITH CONTROLLED DENSITY FILL	10	FT				
277	SPEC	6-5 INCH PVC, SCHEDULE 40, CONDUIT CONCRETE ENCASED IN TRENCH WITH CMSC 912 COMPACTED GRANULAR MATERIAL	1,330	FT				
278	SPEC	6-5 INCH PVC, SCHEDULE 40, CONDUIT CONCRETE ENCASED IN TRENCH WITH CONTROLLED DENSITY FILL	50	FT				
279	SPEC	8-5 INCH PVC, SCHEDULE 40, CONDUIT CONCRETE ENCASED IN TRENCH WITH CMSC 912 COMPACTED GRANULAR MATERIAL	169	FT				
280	SPEC	8-5 INCH PVC, SCHEDULE 40, CONDUIT CONCRETE ENCASED IN TRENCH WITH CONTROLLED DENSITY FILL	10	FT				
281	SPEC	10-5 INCH PVC, SCHEDULE 40, CONDUIT CONCRETE ENCASED IN TRENCH WITH CMSC 912 COMPACTED GRANULAR MATERIAL	114	FT				
282	SPEC	12-5 INCH PVC, SCHEDULE 40, CONDUIT CONCRETE ENCASED IN TRENCH WITH CMSC 912 COMPACTED GRANULAR MATERIAL	7	FT				
283	SPEC	PRECAST ELECTRIC MANHOLE	2	EACH				
284	SPEC	ELECTRIC MANHOLE ADJUST TO GRADE	1	EACH				
							AEP DUCT BANK SUBTOTAL =	
		DUBLINK						
285	SPEC	1-4" AND 12-1.25" SDR-11 CONDUITS WITH CMSC 912 COMPACTED GRANULAR MATERIAL	2,046	FT				
286	SPEC	1-4" AND 12-1.25" SDR-11 CONDUITS WITH CONTROLLED DENSITY FILL	34	FT				
287	SPEC	COMMUNICATIONS MANHOLE, COMPLETE	2	EACH				
							DUBLINK SUBTOTAL =	
		LANDSCAPE & MATERIALS						

BID SCHEDULE

BIDDER agrees to perform all work described in the CONTRACT DOCUMENTS for the following unit prices:

Riverside Drive Realignment
Part 2

CITY OF DUBLIN

REF NO.	(1) ITEM	(2) DESCRIPTION	(3) QUANT.	(4) UNIT	(5) LABOR ($)	(6) MATERIAL ($)	(7) (5)+(6) TOTAL ($)	(8) (3) x (7) TOTAL EXTENDED INFORMAL PRICE ($)
288	661	PERENNIALS, AS PER PLAN	10,145	EACH				
289	661	BULBS, AS PER PLAN	33,978	EACH				
290	661	DECIDUOUS SHADE TREE (2" CAL), AS PER PLAN	17	EACH				
291	661	DECIDUOUS SHADE TREE (3" CAL), AS PER PLAN	90	EACH				
292	661	DECIDUOUS SHADE TREE (4" CAL), AS PER PLAN	14	EACH				
293	SPEC	BICYCLE RACK, AS PER PLAN	26	EACH				
294	SPEC	GRANITE SEAT WALL	2	EACH				
295	SPEC	12" PLANTING SOIL FURNISHED AND PLACED, AS PER PLAN	1,438	CU YD				
296	SPEC	30" PLANTING SOIL FURNISHED AND PLACED, AS PER PLAN	1,069	CU YD				
297	SPEC	24" STRUCTURAL SOIL FURNISHED AND PLACED, AS PER PLAN	428	CU YD				
298	SPEC	STONE VENEER, AS PER PLAN	2,425	SF				
299	SPEC	STONE WALL CAP, AS PER PLAN	184	LF				
300	SPEC	ARCHITECTURAL PRECAST STAIR TREADS, AS PER PLAN	820	LF				
301	SPEC	ARCHITECTURAL PRECAST BIKE RILL, AS PER PLAN	67	LF				

BID SCHEDULE

BIDDER agrees to perform all work described in the CONTRACT DOCUMENTS for the following unit prices:

Riverside Drive Realignment
Part 2

CITY OF DUBLIN

REF NO.	(1) ITEM	(2) DESCRIPTION	(3) QUANT.	(4) UNIT	(5) LABOR ($)	(6) MATERIAL ($)	(7) (5)+(6) TOTAL ($)	(8) (3) x (7) TOTAL EXTENDED INFORMAL PRICE ($)
302	SPEC	HANDRAIL, AS PER PLAN	76	LF				
303	SPEC	TILE, AS PER PLAN	4,709	SF				
							LANDSCAPE & MATERIALS SUBTOTAL =	
		MAINTENANCE OF TRAFFIC						
304	614*	MAINTAINING TRAFFIC, AS PER PLAN	1	LUMP				
305	614*	LAW ENFORCEMENT OFFICER (WITH PATROL CAR) FOR ASSISTANCE DURING CONSTRUCTION OPERATIONS, AS PER PLAN	200	HOURS				
306	614*	DETOUR SIGNING	1	LUMP				
307	614*	PORTABLE CHANGEABLE MESSAGE SIGNS, AS PER PLAN	2	EACH				
308	614*	PORTABLE BARRIER, 32"	280	FT				
309	615*	ROADS FOR MAINTAINING TRAFFIC, AS PER PLAN	1	LUMP				
310	615*	PAVEMENT FOR MAINTAINING TRAFFIC, CLASS A, AS PER PLAN	1,395	SQ YD				
311	616*	WATER	100	M GAL				
							MAINTENANCE OF TRAFFIC SUBTOTAL =	
		MISCELLANEOUS						
312	108.03**	TYPE B - CRITICAL PATH METHOD (CPM) SCHEDULE	1	LUMP				
313	623	CONSTRUCTION LAYOUT STAKES, AS PER PLAN	1	LUMP				
314	624	MOBILIZATION, AS PER PLAN	1	LUMP				
315	SPEC	PROOF SURVEY	1	LUMP				
							MISCELLANEOUS SUBTOTAL =	
		ALTERNATE 1						
316	609	GRANITE BAND (12 INCH X 6 INCH)	-3,930	FT				
317	609	CONCRETE BAND (12 INCH X 6 INCH)	3,930	FT				
							ALTERNATE 1 SUBTOTAL =	

BID SCHEDULE

BIDDER agrees to perform all work described in the CONTRACT DOCUMENTS for the following unit prices:

Riverside Drive Realignment
Part 2

CITY OF DUBLIN

REF NO.	(1) ITEM	(2) DESCRIPTION	(3) QUANT.	(4) UNIT	(5) LABOR ($)	(6) MATERIAL ($)	(7) (5)+(6) TOTAL ($)	(8) (3) x (7) TOTAL EXTENDED INFORMAL PRICE ($)

* DENOTES ODOT CONSTRUCTION AND MATERIAL SPECIFICATIONS (2013 EDITION).
** DENOTES CITY OF DUBLIN GENERAL CONDITIONS SECTION 100.
\+ DENOTES ITEM TO BE FURNISHED AND INSTALLED BY CITY OF DUBLIN; ODOT CONSTRUCTION AND MATERIAL SPECIFICATIONS (2013)
ALL OTHER ITEMS REFERENCE CITY OF COLUMBUS CONSTRUCTION AND MATERIAL SPECIFICATIONS (2012 EDITION.)

BASE BID TOTAL = _____

BASE BID + ALTERNATE 1 = _____

TOTAL BID FOR PROJECT: _____

SUBMITTED BY: (COMPANY) _____

C. COMBINED BID/PERFORMANCE/PAYMENT BOND

CITY OF DUBLIN
SR 161 / RIVERSIDE DRIVE ROUNDABOUT (PART1) AND RIVERSIDE DRIVE REALIGNMENT AND OTHER PUBLIC IMPROVEMENTS (PART 2)

KNOW ALL PERSONS BY THESE PRESENTS, that we, the undersigned _____ (the "Principal") and

_____ (the "Surety"),are hereby held and firmly bound unto the CITY OF DUBLIN, Ohio as obligee in the penal sum of the dollar amount of the bid submitted by the Principal to the CITY OF DUBLIN on _____, 2015 to undertake the project known as the **CITY OF DUBLIN**, **SR 161 / RIVERSIDE DRIVE ROUNDABOUT (PART1) AND RIVERSIDE DRIVE REALIGNMENT AND OTHER PUBLIC IMPROVEMENTS (PART 2) PROJECT.**

The penal sum referred to herein shall be the dollar amount of the Principal's bid to CITY OF DUBLIN, incorporating any additive or deductive alternate proposals made by the Principal on the date referred to above to the CITY OF DUBLIN, which are accepted by the CITY OF DUBLIN. In no case shall the penal sum exceed the amount of _ dollars ($_). (If the foregoing blank is not filled in, the penal sum will be the full amount of the Principal's bid, including alternates. Alternatively, if the blank is filled in, the amount stated must not be less than the full amount of the bid including alternates, in dollars and cents. A percentage is not acceptable.)

For the payment of the penal sum well and truly to be made, we hereby jointly and severally bind ourselves, our heirs, executors, administrators, successors, and assigns.

THE CONDITION OF THE ABOVE OBLIGATION IS SUCH, that whereas the above-named Principal has submitted a bid for the CITY OF DUBLIN, SR 161 / RIVERSIDE DRIVE ROUNDABOUT (PART1) AND RIVERSIDE DRIVE REALIGNMENT AND OTHER PUBLIC IMPROVEMENTS (PART 2) PROJECT.

NOW, THEREFORE, if the CITY OF DUBLIN accepts the bid of the Principal and the Principal fails to enter into a proper contract in accordance with the bid, plans, details, specifications, and bills of material; and in the event the Principal pays to the CITY OF DUBLIN the difference not to exceed ten percent of the penalty hereof between the amount specified in the bid and such larger amount for which the CITY OF DUBLIN may in good faith contract with the next lowest bidder to perform the work covered by the bid, or in the event the CITY OF DUBLIN does not award the contract to the next lowest bidder and resubmits the project for bidding, the Principal will pay the CITY OF DUBLIN the difference not to exceed ten percent of the penalty hereof between the amount specified in the bid, or the costs, in connection with the resubmission, of printing new contract documents, required advertising and printing and mailing notices to prospective bidders, whichever is less, then this obligation shall be null and void, otherwise to remain in full force and effect; if the CITY OF DUBLIN accepts the bid of the Principal and the Principal within ten days after the awarding of the contract, enters into a proper contract in accordance with the bid, plans, details specifications, and bills of material, which said contract is made a part of this bond the same as though set forth herein.

NOW ALSO, if the Principal shall well and faithfully do and perform the things agreed by Principal to be done and performed according to the terms of said contract; and shall pay all lawful claims of subcontractors, material men, and laborers, for labor performed and materials furnished in the carrying forward, performing, or completing of said contract; we agreeing and assenting that this undertaking shall be for the benefit of any material man or laborer having a just claim, as well as for the CITY OF DUBLIN herein; then this obligation shall be void; otherwise the same shall remain in full force and effect; it being expressly understood and agreed that the liability of the Surety for any and all claims hereunder shall in no event exceed the penal amount of this obligation as herein stated.

The Surety hereby stipulates and agrees that no modifications, omissions, or additions, in or to the terms of said contract or in or to the plans or specifications therefore shall in any wise affect the obligations of the Surety on the Surety's bond, and the Surety does hereby waive notice of any such modifications, omissions or additions to the terms of the contract or to the plans or specifications.

Signed this _____ day of _____, 2015.

PRINCIPAL:

_____

By: _____

(Signature)

Print Name: _____

Title: _____

Address:

_____

_____

Telephone: ( ) _____

SURETY:

_____

By: _____

(Signature)

Print Name: _____

Title: _____

Address:

_____

_____

Telephone: ( ) _____

SURETY AGENT:

_____

By: _____

(Signature)

Print Name: _____

Title: _____

Address:

_____

_____

Telephone: ( ) _____

D. ALTERNATE BID SECURITY FORM

Bidder Name: _____

Project Name: **SR 161 / RIVERSIDE DRIVE ROUNDABOUT (PART1) AND RIVERSIDE DRIVE REALIGNMENT AND OTHER PUBLIC IMPROVEMENTS (PART 2)**

The undersigned Bidder hereby submits with its bid the following bid security equaling 10% of the total amount of the bid as required by Ohio Revised Code Section 153.54:

[ ] A Certified Check

[ ] A Cashier's Check

[ ] A Letter of Credit pursuant to Chapter 1305 of the Ohio Revised Code

A bid guaranty filed under this form shall be conditioned to provide that if the bid is accepted, the bidder, after the awarding or the recommendation for the award of the contract, whichever the CITY OF DUBLIN designates, will enter into a proper contract in accordance with the bid, plans, details, specifications, and bills of material. All bid guaranties filed hereunder shall be payable to the CITY OF DUBLIN, be for the benefit of the CITY OF DUBLIN, and be deposited with, and held by, the CITY OF DUBLIN.

Bidder Signature: _____

Print Name: _____

E. AFFIDAVIT OF AUTHORITY

CITY OF DUBLIN

SR 161 / RIVERSIDE DRIVE ROUNDABOUT (PART1) AND RIVERSIDE DRIVE REALIGNMENT AND OTHER PUBLIC IMPROVEMENTS (PART 2)

(To be completed and executed if the Contractor is anything other than a sole proprietorship.)

State of _____ (State Where Completing this Form)

County of _____ (County Where Completing this Form) ss:

_____ (Your Name), being duly sworn, deposes and says that he or she is the _____ (Position) of _____ (Business Name), a _____ (Type of Entity) organized and existing under and by virtue of the laws of the State of _____ (State), and having its principal office at:_____(Address), _____ (City), _____ (County),_____ (State).

Affiant further says that he is familiar with the records, minute books and by-laws of_____ (Business Name).

Affiant further says that _____ (Name of Person Signing Contract) _____ (Title of Person Signing Contract) of _____ (Business Name) is duly authorized to sign the Contract for the CITY OF DUBLIN SR 161 / RIVERSIDE DRIVE ROUNDABOUT (PART1) AND RIVERSIDE DRIVE REALIGNMENT AND OTHER PUBLIC IMPROVEMENTS (PART 2) Project on behalf of _____ (Business Name) by virtue of _____.

(Describe how the person signing the Contract has Authority to sign for example: "a provision of the by-laws" or "a resolution of the Board of Directors"—if by resolution, give date of adoption.)

_____ , _____ .

(Your Signature) (Your Position)

The foregoing instrument was acknowledged before me this _____ (date) by _____ (name of person acknowledged). Signature and Seal of person taking acknowledgement:

_____

F. COMBINED DELINQUENT PERSONAL PROPERTY TAX & NONCOLLUSION AFFIDAVIT

State of _____ (State Where Completing this Form)

County of _____ (County Where Completing this Form) ss:

_____ (Your Name), Affiant, being first duly sworn, deposes and says:

1. I am the _____ (Your Title) of _____ (Business Name), the Bidder that has submitted the attached Bid;

2. I am fully informed respecting the preparation and contents of the attached Bid and all pertinent circumstances respecting such Bid, and that such Bid is genuine and is not a collusive or sham Bid;

4. Neither the said Bidder nor any of its officers, partners, owners, agents, representatives, employees, or parties in interest, including this affiant, has in any way colluded, conspired, connived, or agreed directly or indirectly with any other Bidder, firm, or person to submit a collusive or sham Bid in connection with the contract for which the attached Bid has been submitted, or to refrain from Bidding in connection with such contract, or has in any manner directly or indirectly sought by agreement, collusion, communication, or conference with any other Bidder, firm, or person to fix the price or prices in the attached Bid or of any other Bidder, or to fix any overhead, profit, or cost element of Bid price or the Bid price of any other Bidder, or to secure through any collusion, conspiracy, connivance, or unlawful agreement any advantage against the **CITY OF DUBLIN**, **OHIO**, or any person interested in the proposed contract; and

5. The price or prices quoted in the attached Bid are fair, proper, and not tainted by any collusion, conspiracy, connivance, or unlawful agreement on the part of the Bidder or any of its agent's representatives, owners, employees, or parties in interest, including this affiant.

6. Effective this _____ day of _____, **2015**, the Bidder:

Choose One

(__) is charged with delinquent personal property taxes on the general list of personal property as set forth below:

County	Amount (include total amount, with penalties and interest thereon)
_____County	$_____
_____County	$_____
_____County	$_____
_____County	$_____

(__) is not charged with delinquent personal property taxes on the general list of personal property in any Ohio county.

Signed: _____

Title: _____

The foregoing instrument was acknowledged before me this _____ (date)

by _____ (name of person acknowledged).

Signature and Seal of person taking acknowledgement:

_____ _____

G. W-9 FORM

Form **W-9**
(Rev. December 2011)
Department of the Treasury
Internal Revenue Service

Request for Taxpayer Identification Number and Certification

Give Form to the requester. Do not send to the IRS.

Print or type
See Specific Instructions on page 2.

Name (as shown on your income tax return)

Business name/disregarded entity name, if different from above

Check appropriate box for federal tax classification:
☐ Individual/sole proprietor ☐ C Corporation ☐ S Corporation ☐ Partnership ☐ Trust/estate

☐ Limited liability company. Enter the tax classification (C=C corporation, S=S corporation, P=partnership) ▶

☐ Other (see instructions) ▶

☐ Exempt payee

Address (number, street, and apt. or suite no.)

Requester's name and address (optional)

City, state, and ZIP code

List account number(s) here (optional)

Part I **Taxpayer Identification Number (TIN)**

Enter your TIN in the appropriate box. The TIN provided must match the name given on the "Name" line to avoid backup withholding. For individuals, this is your social security number (SSN). However, for a resident alien, sole proprietor, or disregarded entity, see the Part I instructions on page 3. For other entities, it is your employer identification number (EIN). If you do not have a number, see *How to get a TIN* on page 3.

Note. If the account is in more than one name, see the chart on page 4 for guidelines on whose number to enter.

Social security number
☐☐☐ – ☐☐ – ☐☐☐☐

Employer identification number
☐☐ – ☐☐☐☐☐☐☐

Part II **Certification**

Under penalties of perjury, I certify that:

1. The number shown on this form is my correct taxpayer identification number (or I am waiting for a number to be issued to me), and
2. I am not subject to backup withholding because: (a) I am exempt from backup withholding, or (b) I have not been notified by the Internal Revenue Service (IRS) that I am subject to backup withholding as a result of a failure to report all interest or dividends, or (c) the IRS has notified me that I am no longer subject to backup withholding, and
3. I am a U.S. citizen or other U.S. person (defined below).

Certification instructions. You must cross out item 2 above if you have been notified by the IRS that you are currently subject to backup withholding because you have failed to report all interest and dividends on your tax return. For real estate transactions, item 2 does not apply. For mortgage interest paid, acquisition or abandonment of secured property, cancellation of debt, contributions to an individual retirement arrangement (IRA), and generally, payments other than interest and dividends, you are not required to sign the certification, but you must provide your correct TIN. See the instructions on page 4.

Sign Here **Signature of U.S. person ▶** **Date ▶**

General Instructions

Section references are to the Internal Revenue Code unless otherwise noted.

Purpose of Form

A person who is required to file an information return with the IRS must obtain your correct taxpayer identification number (TIN) to report, for example, income paid to you, real estate transactions, mortgage interest you paid, acquisition or abandonment of secured property, cancellation of debt, or contributions you made to an IRA.

Use Form W-9 only if you are a U.S. person (including a resident alien), to provide your correct TIN to the person requesting it (the requester) and, when applicable, to:

1. Certify that the TIN you are giving is correct (or you are waiting for a number to be issued),
2. Certify that you are not subject to backup withholding, or
3. Claim exemption from backup withholding if you are a U.S. exempt payee. If applicable, you are also certifying that as a U.S. person, your allocable share of any partnership income from a U.S. trade or business is not subject to the withholding tax on foreign partners' share of effectively connected income.

Note. If a requester gives you a form other than Form W-9 to request your TIN, you must use the requester's form if it is substantially similar to this Form W-9.

Definition of a U.S. person. For federal tax purposes, you are considered a U.S. person if you are:

- An individual who is a U.S. citizen or U.S. resident alien,
- A partnership, corporation, company, or association created or organized in the United States or under the laws of the United States,
- An estate (other than a foreign estate), or
- A domestic trust (as defined in Regulations section 301.7701-7).

Special rules for partnerships. Partnerships that conduct a trade or business in the United States are generally required to pay a withholding tax on any foreign partners' share of income from such business. Further, in certain cases where a Form W-9 has not been received, a partnership is required to presume that a partner is a foreign person, and pay the withholding tax. Therefore, if you are a U.S. person that is a partner in a partnership conducting a trade or business in the United States, provide Form W-9 to the partnership to establish your U.S. status and avoid withholding on your share of partnership income.

Cat. No. 10231X Form **W-9** (Rev. 12-2011)

H. LIST OF SUBCONTRACTORS

CITY OF DUBLIN

SR 161 / RIVERSIDE DRIVE ROUNDABOUT (PART1) AND RIVERSIDE DRIVE REALIGNMENT AND OTHER PUBLIC IMPROVEMENTS (PART 2) PROJECT

NOTE: The bidder must perform at least 50% of the total contract cost with its own forces.

1. Name of Subcontractor (Include names of any parent company) :_____

Federal Identification Number: _____

Address _____

_____

Type of Work:

Subcontractor to Provide:_____

Approximate Percentage of the Contract Cost to be Performed by Subcontractor: _____

Experience Record: _____

_____

_____

2. Name of Subcontractor (Include names of any parent company) :_____

Federal Identification Number: _____

Address: _____

_____

Type of Work:

Subcontractor to Provide:_____

Approximate Percentage of the Contract Cost to be Performed by Subcontractor: _____

Experience Record: _____

_____

_____

3. Name of Subcontractor (Include names of any parent company) :_____

Federal Identification Number: _____

Address: _____

_____

Type of Work:

Subcontractor to Provide:_____

Approximate Percentage of the Contract Cost to be Performed by Subcontractor: _____

Experience Record: _____

_____

_____

4. Name of Subcontractor (Include names of any parent company) :_____

Federal Identification Number: _____

Address: _____

_____

Type of Work:

Subcontractor to Provide:_____

Approximate Percentage of the Contract Cost to be Performed by Subcontractor: _____

Experience Record: _____

_____

_____

5. Name of Subcontractor (Include names of any parent company) :_____

Federal Identification Number: _____

Address: _____

_____

Type of Work:

Subcontractor to Provide:_____

Approximate Percentage of the Contract Cost to be Performed by Subcontractor: _____

Experience Record: _____

_____

_____

Add additional sheets if necessary.

I. CONTRACTOR QUALIFICATION STATEMENT

Contractor: _____

Date: _____

Project: **SR 161 / RIVERSIDE DRIVE ROUNDABOUT (PART1) AND RIVERSIDE DRIVE REALIGNMENT AND OTHER PUBLIC IMPROVEMENTS (PART 2) PROJECT**

The foregoing Contractor submits this Statement of Qualifications to the CITY OF DUBLIN, OHIO as part of its bid for the above named Project and represents that the information contained herein is complete and accurate to the best of the Contractor's knowledge. The CITY OF DUBLIN reserves the right to reject any, part of any, or all bids and to waive any informalities and irregularities. The Contractor expressly acknowledges this right of the CITY OF DUBLIN to reject any or all bids or to reject any incomplete or irregular bid. Contractor must furnish all information requested on this Statement of Qualifications. Failure to do so may result in disqualification of the bid. The CITY OF DUBLIN may consider the information submitted on this form in determining the lowest and best Contractor for the Project giving such weight to each item as the CITY OF DUBLIN deems appropriate. The CITY OF DUBLIN may conduct such investigations as are deemed necessary to establish the qualifications and financial ability of the Contractor and its subcontractors and suppliers.

The Contractor authorizes the CITY OF DUBLIN and its representatives to contact the owners, design professionals, and others having knowledge (collectively "Contacts") on projects on which the Contractor has worked—whether listed on this form or not—and authorizes and requests such Contacts to provide the CITY OF DUBLIN with a candid evaluation of the Contractor's performance. By submitting its bid, the Contractor agrees that if it or any person, directly or indirectly, on its behalf or for its benefit brings an action against any of such Contacts or the employees of any of them as a result of or related to such candid evaluation, the Contractor will indemnify and hold harmless such Contacts and the employees of any of them from any claims whether or not proven that are part of or are related to such action and from all legal fees and expenses incurred by any of them arising out of or related to such legal action. This obligation is expressly intended for the benefit of such Contacts and the employees of each of them. By submitting this form, Contractor agrees that the CITY OF DUBLIN's determination of which Contractor is the lowest and best Contractor shall be final and conclusive, and that if the Contractor or any person on its behalf challenges such determination in any legal proceeding, the Contractor will indemnify and hold the CITY OF DUBLIN and its employees and agents harmless from any claims included or related to such legal proceeding, whether or not proven, and from legal fees and expenses incurred by the City, its employees, or agents that arise out of or are related to such challenge.

NAME OF PROJECT: **SR 161 / RIVERSIDE DRIVE ROUNDABOUT (PART1) AND RIVERSIDE DRIVE REALIGNMENT AND OTHER PUBLIC IMPROVEMENTS (PART 2) PROJECT**

1. ORGANIZATION

1.1 How many years has your organization been in business as a Contractor?

1.2 How many years has your organization been in business under its present business name?

1.2.1 Under what other or former names has your organization operated?

1.3 If your organization is a corporation, answer the following:

1.3.1 Date of incorporation:

1.3.2 State of incorporation:

1.3.3 President's name:

1.3.4 Vice President's name(s):

1.3.5 Secretary's name:

1.3.6 Treasurer's name:

1.4 If your organization is a partnership, answer the following:

1.4.1 Date of organization:

1.4.2 Type of partnership (if applicable):

1.4.3 Name(s) of general partner(s):

1.5 If your organization is individually owned, answer the following:

1.5.1 Date of organization:

1.5.2 Name of owner:

1.6 If the form of your organization is other than those listed above, describe it and name the principals:

2. LICENSING

2.1 List jurisdictions and trade categories in which your organization is legally qualified to do business, and indicate registration or license numbers, if applicable.

2.2 List jurisdictions in which your organization's partnership or trade name is filed.

3. EXPERIENCE

3.1 List the categories of work that your organization normally performs with its own forces.

3.2 Claims and Lawsuits (If the answer to any of the questions below is yes, please attach details.)

3.2.1 Has your organization ever failed to complete any work?

3.2.2 Within the last five (5) years has your organization or any of its officers initiated any Claims, had any Claims initiated against it or them, or been involved in or is currently involved in any mediation or arbitration proceedings or lawsuits suits related to any construction project, or has any judgments or awards outstanding against it or them? If the answer is yes, please attach the details for each Claim, including the names and telephone numbers of the persons who are parties, the amount of the Claim, the type of Claim and basis for the Claim, and the outcome.

Note: As used in this document "Claim" means a Claim initiated under the Contract Documents for a project.

3.3 Within the last five years, has any officer or principal of your organization ever been an officer or principal of another organization when it failed to complete a construction contract? If the answer is yes, please attach details for each instance, including the names and telephone numbers of the persons who are parties to the contract, and the reason(s) the contract was not completed.

3.4 On a separate sheet, list construction projects your organization has in progress with an original Contract Sum of more than $ 21,309,500.00, giving the name of project, owner and its telephone number, design professional and its telephone number, contract amount, percent complete and scheduled completion date.

3.4.1 State total amount of work in progress and under contract:

3.5 Provide the following information for each contract your organization has had during the last five (5) years, including current contracts, where the Contract Sum is fifty percent (50%) or more of the bid amount for this Project, including add alternates. If there are more than ten (10) of these contracts only provide information on the most recent ten (10) contracts, including current contracts.

Project And Work	Contract Sum	Owner's Representative & Telephone Number	Engineer's Or Architect's Representative Name & Telephone Number

3.5.1 Provide the following information for each project your organization has had during the last five (5) years, which your organization believes is of

comparable or greater size and complexity than the Owner's project. If there are more than five (5) of these projects, only provide information on the most recent five (5) projects, including current projects.

Project And Work	Contract Sum	Owner's Representative & Telephone Number	Engineer's Or Architect's Representative Name & Telephone Number

3.5.2 State average annual amount of construction work your organization has performed during the last five years.

3.5.3 If any of the following members of your organization's management--president, chairman of the board, or any director--operates or has operated another construction company during the last five (5) years, identify the member of management and the name of the construction company.

3.5.4 If your organization is operating under a trade name registration with the Secretary of State for the State of Ohio, identify the entity for which the trade name is registered. If none, state "none."

3.5.5. If your organization is a division or wholly-owned subsidiary of another entity or has another relationship with another entity, identify the entity of which it is a division or wholly-owned subsidiary or with which it has another relationship and also identify the nature of the relationship. If none, state "not applicable."

3.6 On a separate sheet, list the construction education, training and construction experience for each person who will fill a management role on the Project, including without limitation the Project Executive, Project Engineer, Project Manager, and Project Superintendent. For each person listed, include with the other information the last three projects on which the person worked and the name and telephone number of the Design Professional and the Owner.

4. REFERENCES

4.1 Trade References:

4.2 Bank References:

4.3 Surety:

4.3.1 Name of bonding company:

4.3.2 Name and address of agent:

5. FINANCING

5.1 Financial Statement

5.1.1 Attach a financial statement, preferably audited, including your organization's latest balance sheet and income statement showing the following items:

Current Assets (e.g., cash, joint venture accounts, accounts receivable, notes receivable, accrued income, deposits, materials inventory and prepaid expenses);

Net Fixed Assets;

Other Assets;

Current Liabilities (e.g., accounts payable, notes payable, accrued expenses, provision for income taxes, advances, accrued salaries and accrued payroll taxes); and

Other Liabilities (e.g., capital, capital stock, authorized and outstanding shares par values, earned surplus and retained earnings).

5.1.2 Name and address of firm preparing attached financial statement, and date thereof.

5.1.3 Is the attached financial statement for the identical organization named on page one?

5.1.4 If not, explain the relationship and financial responsibility of the organization whose financial statement is provided (e.g., parent-subsidiary).

5.2 Will the organization whose financial statement is attached act as guarantor of the contract for construction?

Certification. The undersigned certifies for the reliance of the Owner that after diligent investigation, to the best of the undersigned's belief, the information provided with this Contractor's Qualification Statement is true, accurate and not misleading.

SIGNATURE

Dated at this ____ day of _____, 2015.

Name of Organization: _____

By: _____(Print Name)

Signature: _____

Title: _____

_____, being duly sworn, deposes and says that the information provided herein is true and sufficiently complete so as not to be misleading.

Subscribed and sworn before me this _____ day of _____, 2015.

_____
Notary Public

My Commission Expires: _____

SEAL

CONTRACTOR'S ORGANIZATION

General Information

Address:_____

Telephone and Facsimile: _____

E-mail address: _____

Web site: _____

If address given above is a branch office address, provide principal home office address: _____

_____

Type of Organization

The Contractor's Organization is a:

__ Corporation

Date and State of Incorporation: _____

Executive Officers: (Names and Addresses)_____

_____

__ Partnership

Date and State of Organization: _____

Type of Partnership: __ General __ Limited __ Limited Liability __ Other: _____

Current General Partners: (Names and Addresses)_____

_____

__ Joint Venture

Date and State of Organization: _____

Joint Venturers: (For each indicate the name, address and form and state of organization, as well as the managing or controlling Joint Venturer if applicable.)_____

_____

_____

_____

__ Limited Liability Company

Date and State of Organization: _____

Members: (Names and Addresses)_____

_____

_____

_____

__ Sole Proprietorship

Date and State of Organization: _____

City or Citys: (Names and Addresses)_____

_____

__ Other

Type of Organization: _____

State of Organization: _____

Citys and/or Principals: (Names and Addresses)_____

_____

In addition to the above categories of business entities, indicate whether Contractor's organization is certified as a:

__ Disadvantaged Business Enterprise Certified by:

_____

__ Minority Business Enterprise Certified by:

_____

__ Women's Business Enterprise Certified by:

_____

__ Historically Underutilized Business Zone Small Business Concern Certified by:_____

LICENSING AND REGISTRATION

Jurisdictions in which Contractor is legally qualified to practice: (Indicate license or registration numbers for each jurisdiction, if applicable, and type of license or registration. Attach separate sheet as necessary.)

_____

_____

In the past five years, has Contractor had any business or professional license suspended or revoked? __ Yes __ No

If yes, describe circumstances on separate attachment, including jurisdiction and bases for suspension or revocation.

CONTRACTOR'S PERSONNEL AND APPROACH

Key Construction Personnel. Create and attach Schedule A, listing the Contractor's: 1) Key Construction Personnel who will work on the Project; 2) their construction experience; and, 3) the percentage of time that each is anticipated to devote to the Project.

List types of work generally performed by Contractor's own work force:

_____

_____

_____

Subcontractors

Indicate criteria used in the selection of subcontractors (Indicate if Not Applicable).

__ Price

__ Financial strength

__ Bonding capacity

__ Previous experience with Contractor

__ Previous experience in industry

__ Subcontractor's reputation in industry

__ Availability of sufficient personnel

__ Safety record

__ Other: _____

State Contractor's policy on the bonding of its subcontractors:_____

_____

_____

Describe Contractor's proposed technical and management approach to the Project, including approaches to quality, time and cost control: (Attach additional sheets as necessary.)

CONTRACTOR'S RELEVANT EXPERIENCE

Past Projects List. In the chart below, list at least five construction projects Contractor has worked on in the past five (5) years with project delivery systems similar in size and scope to the one to be employed for this Project. (For Joint Ventures, list each joint venturer's projects separately).

City Name	Project Type	Contract Amount	Completion Date	Contact Name and Number

Current Projects List. In the chart below, list all current projects of the Contractor, including projects not yet underway, approximate dollar value of each and the percentage of completion of each project. (For Joint Ventures, list each joint venturer's projects separately).

City Name	Project Type	Contract Amount	Percentage Complete	Contact Name and Number

Annual Construction Volume. Indicate the annual volume of work completed for the past three years:

Year ____ _____

Year ____ _____

Year ____ _____

In the past five years, has Contractor defaulted, been terminated for cause or failed to complete a construction contract awarded to it? __ Yes __ No

If yes, describe circumstances on separate attachment, including dates and owner, and if applicable, Contractor's surety.

In the past five years, has any officer, partner, joint venturer or proprietor of the Contractor ever failed to complete a construction contract awarded to that person or entity in their name or on behalf of another organization? __ Yes __ No

If yes, describe circumstances on separate attachment, including dates and City, and if applicable, surety.

Describe all litigation arising from Contractor's active projects or projects worked on within the last five years. (Attach additional sheets as necessary.)

CONTRACTOR'S SAFETY PROGRAM

If Contractor has a written safety program, attach a copy.

Does the Contractor's safety program include instructions on the following:

Safety work practices __ Yes __ No

Safety supervision __ Yes __ No

Toolbox safety meetings __ Yes __ No

Emergency procedures __ Yes __ No

First aid procedures __ Yes __ No

Accident investigation __ Yes __ No

Fire protection __ Yes __ No

New workers' orientation __ Yes __ No

Do you have a safety officer/department in your company? __ Yes __ No

If yes,

Name: _____

Title: _____

Phone: _____

Do you conduct project safety inspections? __ Yes __ No

If yes, how often? _____

Who conducts this inspection?

Name: _____

Title: _____

Do you hold project safety meetings for field supervisors? __ Yes __ No

If yes, how often? __ Weekly __ Bi-weekly __ Monthly __ Less often as needed

Do you have in place an instruction program on safety for newly hired or promoted supervisors? __ Yes __ No

If yes, please attach a copy of program format.

If craft "toolbox" safety meetings are held, what is their frequency? __ Weekly __ Bi-weekly __ Monthly __ Less often as needed

Do you have a drug and alcohol testing policy? __ Yes __ No

If Yes, attach a copy of the policy.

Provide Contractor's OSHA No. 300 Log and Summary of Occupational Injuries and Illnesses for the past five years.

List all OSHA Citations and Notifications of Penalty, monetary or other, received within the last five years: (Indicate final disposition as applicable. Attach additional sheets as necessary.)

List all safety citations of violations under state law received within the last five years: (Indicate final disposition as applicable. Attach additional sheets as necessary.)

SURETY AND INSURANCE

Surety Company: (Name and Address)

Agent: (Name, Address and Telephone Number)

Total bonding capacity: $ _____

Limit per project: $ _____

Available bonding capacity as of this date: $ _____

CONTRACTOR FINANCIAL INFORMATION

List principal banks used, the approximate value of outstanding loans and general repayment history, as well as the Name, Address and Telephone Number of a contact person:

Attach audited financial statements for the past three (3) years, including latest balance sheet.

State whether Contractor, or any of the individuals identified in Article 1, has/have been the subject of any bankruptcy proceeding within the last five (5) years.

__ Yes __ No

If yes, describe circumstances on separate attachment.

STATEMENT OF POTENTIAL CONFLICTS OF INTEREST

Provide information about any business associations, financial interests or other circumstances that may create a conflict of interest with the City or any other Party known to be involved in the Project.

OTHER INFORMATION

Within the past five years, has Contractor, or any of the individuals identified in Article 1 and/or Schedule A been the subject of any criminal indictment or judgment of conviction for any business-related conduct constituting a crime under state or federal law? __ Yes __ No

If yes, describe circumstances on separate attachment.

Within the past five years, has Contractor or any of the individuals identified in Article 1 and/or Schedule A been the subject of any federal or state suspension or disbarment? __ Yes __ No

If yes, describe circumstances on separate attachment.

Within the past five years, has Contractor, or any of the individuals identified in Article 1 and/or Schedule A been the subject of any formal proceeding or consent order with a state or federal environmental agency involving a violation of state or federal environmental laws? __ Yes __ No

If yes, describe circumstances. (Attach additional sheets as necessary.)

REFERENCES

Provide one additional reference for each of the following categories.

1. City

Name: _____

Address: _____

Telephone No.: _____

Contact Person: _____

2. Architect/Engineer

Name: _____

Address: _____

Telephone No.: _____

Contact Person: _____

3. Subcontractor

Name: _____

Address: _____

Telephone No.: _____

Contact Person: _____

The Undersigned, on behalf of the Contractor, certifies under that the information provided here, or attached to this form, is true and sufficiently complete to the best of the Contractor's knowledge.

CONTRACTOR

Signature_____

Printed Name: _____

Title: _____

Date: _____

III. ADDITIONAL CONTRACT DOCUMENTS

A. CITY OF DUBLIN/CONTRACTOR AGREEMENT

STANDARD AGREEMENT

CITY OF DUBLIN, OHIO

I. INTRODUCTION

This Agreement is entered into on , by and between the CITY OF DUBLIN, OHIO ("Owner"), located at 5200 Emerald Parkway, Dublin, Ohio 43017 , and ("Contractor'), located at for the CITY OF DUBLIN SR 161 / RIVERSIDE DRIVE ROUNDABOUT (PART1) AND RIVERSIDE DRIVE REALIGNMENT AND OTHER PUBLIC IMPROVEMENTS (PART 2) PROJECT ("Project").

THIS DOCUMENT HAS IMPORTANT LEGAL CONSEQUENCES. CONSULTATION WITH AN ATTORNEY IS ENCOURAGED WITH RESPECT TO ITS EXECUTION, COMPLETION AND MODIFICATION.

The Owner, a political subdivision of the State of Ohio, and the Contractor have entered into this Owner-Contractor Agreement ("Agreement") as of the date set forth above. The Owner and the Contractor agree as follows:

1 WORK.

1.1 The Contractor shall furnish all the labor, services, materials, plant, equipment, tools, scaffolds, appliances, transportation, and all other things (collectively called the "Work") necessary for the timely and proper completion of the Work described in the Contract Documents for the Project. The Contractor shall provide the Performance and Payment Bonds on the forms and in the manner described in the Contract Documents.

1.2 CLEANUP. Contractor shall cleanup, repair, restore and otherwise return any site or location provided by Owner to the condition in which it was delivered to Contractor. Contractor shall repair, at its sole expense, any property it damages, whether part of the work or not, to a condition acceptable to Owner.

1.3 COMPLETION. The Project shall be finally completed by: October 15, 2016. The Contractor shall at all times furnish sufficient skilled workers, materials, and equipment to perform the Work in strict conformance with the Contract Documents and to the entire satisfaction of the Owner, so as to complete the Project by the Date for Final Completion. All materials and equipment provided shall be new, free from all defects, fit for the purpose for which intended, and merchantable.

1.4 SUPERVISION. The Contractor shall assign a competent Project Supervisor who shall be present on site. At the Owner's request and without additional charge to Owner, the Contractor shall replace the Project Supervisor. The Owner's Representative shall not be responsible for the acts or omissions of the Project Supervisor or his assistants. At a minimum, the Project Supervisor shall be present on site whenever any Contractor or Subcontractor personnel are present on site.

1.5 TAXES AND FEES. Contractor is subject to and responsible for paying fees to obtain all applicable licenses, permits, and other permissions necessary to perform its obligations under this

Contract. Contractor is responsible for paying federal, state, and local taxes. Contractor agrees to withhold all income taxes due or payable under the provisions of Income Tax Ordinances of the Owner, for qualifying wages, salaries, and commissions paid to its employees and further agrees that any of its sub-contractors shall be required to agree to withhold any such income taxes due for services performed under this Contract.

2 CONTRACT DOCUMENTS.

2.1 The Contract Documents consist exclusively of:

- This Agreement Addenda
- Invitation to Bid
- Instructions to Bidders
- Prevailing Wage Rates (if Applicable)
- Proposal
- Bid Schedule
- Performance and Payment Bonds
- Delinquent Personal Property Tax & Noncollusion Affidavit
- Affidavit of Authority (If applicable)
- List of Subcontractors
- Contractor Qualification Statement
- The current version of the CITY OF DUBLIN General Conditions Division 100
- Supplemental or Special General Conditions
- The current version of the CMS, Specification sections 200 through 1000
- Specifications
- Supplemental Specifications
- Geotechnical Reports
- Asbestos Report
- Notice of Award to Bidder
- Notice to Proceed
- Final Affidavit of Compliance with Prevailing Wages
- Plans and Drawings

3 OWNER'S REPRESENTATIVE.

3.1 The City Engineer and/or his designee is the Owner's Representative with respect to all matters involving the Owner.

3.2 Except as specifically stated to the contrary elsewhere in this Agreement, the Contractor shall direct all communications to the Owner through the Owner's Representative, although the City Manager and Fiscal Officer of the Owner are also authorized to send written communications to the Contractor.

3.3 The Owner's Representative will monitor the progress of the Contractor's Work and will conduct regular inspections of the progress of the Work as provided in the Contract Documents. Such inspections shall not relieve the Contractor of any of its obligations under the Contract Documents.

3.4 The Contractor shall at all times provide the Owner's Representative access to the Work.

4 TIME FOR COMPLETION AND PROJECT COORDINATION.

4.1 Project Time Schedule. The Owner anticipates that Work on the Project will begin upon its issuance of a Notice to Proceed and be completed by October 15, 2016, unless the Owner and Contractor agree to different commencement and completion dates.

4.2 Contractor is responsible for scheduling its subcontractors and for any delay resulting from their performance.

4.3 TIME IS OF THE ESSENCE. THE DATES IN THE PROJECT TIME SCHEDULE ARE OF THE ESSENCE OF THIS AGREEMENT. THE CONTRACTOR SHALL PROSECUTE ITS WORK IN ACCORDANCE WITH THE PROJECT TIME SCHEDULE, INCLUDING ANY AMENDMENTS THERETO.

5 DELAYS AND ACCELERATIONS.

5.1 NOTICE OF DELAYS. The Contractor shall give the Owner written notice of any delay affecting its Work within 24 hours of the commencement of the delay as required in 104.03.B of the General Conditions. The failure to give the required notice or include the required "NOTICE OF DELAY" language shall constitute an irrevocable waiver of the Contractor's right to seek an extension of time and/or additional compensation/damages for the delay. The Owner, in its sole and reasonable discretion, shall determine whether a delay shall entitle the Contractor to an extension of time, additional payment, or both.

5.2 ACCELERATION OF THE WORK. If the Contractor fails to perform as required by the Contract schedule, the Owner may require the Contractor to accelerate its Work by adding workers or working additional shifts, extended shifts or overtime, so that the Work is in final form before the Date for Final Completion. If the Owner requires the Contractor to accelerate its Work, the Contractor shall take the required action within two days of the Notice. If the acceleration is not due to fault of the Contractor, Owner shall issue a Change Order increasing the Contract Sum to pay the Contractor for the Contractor's additional costs of accelerating its Work so that the Work is in final form before the Date for Final Completion. If there is a dispute as to whether the Contractor is entitled to a Change Order for accelerating its Work, the Contractor shall proceed to accelerate its Work without waiting for a Change Order or payment of any additional compensation, but may reserve its right to make a claim against the Owner for its additional costs incurred in accelerating its Work. The Contractor's additional costs for accelerating its Work shall be determined in accordance with Paragraph 5.2.2.

5.2.1 OWNER'S OBLIGATION TO PAY. The Owner shall pay the Contractor, as provided in this Paragraph, for the Contractor accelerating its Work so that its Work is in final form before the Date for Final Completion so long as the acceleration is not required as a result of the Contractor's failure to stay on schedule. The Owner shall not be required to compensate the Contractor for accelerating its Work based on the Contractor's own decision so that the Work is in final form by the Date for Final Completion.

5.2.2 COMPENSATION FOR ACCELERATION OF THE WORK. To the extent that the Owner requires the Contractor to accelerate its Work and is obligated to pay under Section

5.2.1, the Owner shall pay the Contractor for the Contractor's additional costs of accelerating its Work, as determined in accordance with this Paragraph. The additional costs of accelerating the Work shall be (a) any premium for overtime, additional shift work, or extended shift work, (b) the cost of any additional supervision required by the acceleration, (c) out of pocket cost of any additional equipment required for the acceleration, and (d) overhead, including home office overhead, and profit equal to ten percent (10%) of the total amount of items (a) and (b) for which additional compensation is permitted under this Paragraph. The foregoing shall be the only additional compensation and/or damages the Contractor shall be entitled to receive for accelerating its Work so that it is complete before the Date for Final Completion. As a condition precedent to its recovery of additional compensation, the Contractor shall provide the Owner with full information about the costs of accelerating its Work in the form and format requested by the Owner.

6 CORRECTIVE ACTION.

6.1 If the Owner determines that the Contractor is not cooperating or coordinating its work properly with its subcontractors, not supplying sufficient skilled workers, not cleaning up the Project, not furnishing the necessary materials, equipment, or any temporary services or facilities to perform the Work in strict conformance with the Contract Documents, or the Contractor is not on schedule, or is not otherwise performing its obligations under the Contract Documents, THE CONTRACTOR SHALL IMMEDIATELY, AND IN NOT LESS THAN FORTY-EIGHT (48) HOURS AFTER NOTICE OF SUCH DETERMINATION, OR SUCH LESSER TIME AS MAY BE PROVIDED IN THE CONTRACT DOCUMENTS, (1) COMMENCE SUCH ACTION AS IS NECESSARY TO CORRECT THE DEFICIENCIES NOTED BY THE OWNER, (2) PROCEED TO USE ITS BEST EFFORTS TO CORRECT SUCH DEFICIENCIES WITHIN THIRTY (30) DAYS OF SUCH NOTICE OR BY THE DEADLINE FOR COMPLETION OF THE PROJECT SET FORTH IN THIS AGREEMENT WHICHEVER IS SOONER AND/OR, (3) IF THE OWNER INSTRUCTS THE CONTRACTOR TO TAKE SPECIFIED CORRECTIVE ACTION, SHALL IMMEDIATELY TAKE SUCH CORRECTIVE ACTION, including but not limited to increasing the number of skilled workers, providing temporary services or facilities, and cleaning up the Project. Such corrective action shall be taken and continued uninterruptedly without waiting to initiate any dispute under Paragraph 11 of this Agreement or the resolution of any dispute initiated under such paragraph.

7 CONTRACT SUM. The lump sum Contract Sum to be paid by the Owner to the Contractor, as provided herein, for the satisfactory performance and completion of the Project and all of the duties, obligations and responsibilities of the Contractor under this Agreement and the other Contract Documents will be $. The Contract Sum includes all federal, state, county, municipal, and other taxes imposed by law, including but not limited to any sales, use, and personal property taxes payable by or levied against the Contractor because of the Work or the materials incorporated into the Work. The Contractor shall pay any such taxes.

8 LIQUIDATED DAMAGES.

8.1 The Contractor shall have its Work completed by the Completion Date stated in Paragraph 1.3; the timeline may be varied following award of the contract based upon the Contractor's ability to perform the work on a different timeline acceptable to the Owner. By entering

into this Agreement, the Contractor agrees that the period for performing the Work is reasonable and that the Contractor's Work can be substantially complete by the date stated in this Agreement.

8.2 If the Contractor does not have its Work on the Project complete by the Completion Date or as otherwise agreed by the parties, the Contractor will pay the Owner (and the Owner may set off from sums coming due the Contractor) liquidated damages as set forth in 108.07 of the General Conditions.

8.3 The Contractor acknowledges by signing this Agreement with the Owner that the amount of liquidated damages represents a reasonable estimate of the actual damages the Owner would incur if the work is not substantially complete by the foregoing date and that the damages that may result from the failure to substantially complete the work by the foregoing date are uncertain and difficult to ascertain. These liquidated damages are damages for loss of use of the Project, and the Contractor in addition to the liquidated damages will be obligated to indemnify and hold the Owner harmless from any claims, and if the Work on the Project is accelerated because of delay, for all costs related to the acceleration of the Work, as provided in the Contract Documents. In addition to such Liquidated Damages, the Contractor shall indemnify, defend and hold the Owner and its employees and agents harmless from any and all claims, whether or not such claims are proven, and from all costs and expenses incurred, as a result of or related to such claims, including but not limited to attorneys' and consultants' fees and expenses, provided that such claims arise out of or are related to the Contractor's failure to Substantially Complete its Work by its Date for Substantial Completion. These Liquidated Damages are in addition to any other remedies available to the Owner under the Contract Documents.

9 LIMITATION AND LIABILITY.

9.1 The Owner's total liability under this Agreement shall be limited to the amount set forth in the Finance Director's certificate accompanying this Agreement. Under no circumstances shall the elected officials, officers, employees, council members, or agents of the Owner be personally liable for any obligations or claims arising out of or related to this Agreement.

10 PAYMENT

10.1 APPLICATIONS FOR PAYMENT. Payment applications shall be submitted on a monthly basis and shall reflect the amount of work completed as of the date the application for payment is submitted. On or before Completion, the Contractor shall submit to the Owner, an itemized payment application for such period in the following format and with one copy of the following documentation: 1) Invoice for work performed and materials and equipment provided for the previous pay period; 2) Current list of the Contractor's Subcontractors and suppliers showing their respective contract sums, amount paid, and amount due; 3) Contractor's Affidavit of Release of Liens with and lien releases in the format provided by the Owner for all the Contractor's Subcontractors and suppliers current through the date of the Contractor's previous Application for Payment; 4) Such other supplemental information as the Owner may require. Such other information may include a schedule of all materials and equipment stored on site.

10.2 The Owner may withhold payment in whole or in part, and may demand that the Contractor refund amounts previously paid, to protect the Owner from loss because of: 1) The

Contractor's default or failure to perform any of its obligations under the Contract Documents, including but not limited to: failure to provide sufficient skilled workers; Work, including equipment or materials, which is defective or otherwise does not conform to the Contract Documents; failure to conform to the Project Time Schedule; and failure to follow the directions of or instructions from the Owner; 2) The Contractor's default or failure to perform any of its obligations under another contract that it has with the Owner; 3) The filing of third party claims, or reasonable evidence that third party claims have been or will be filed; 4) The Work has not proceeded to the extent set forth in the application for payment; 5) Any representations made by the Contractor are untrue; 6) The failure of the Contractor to make payments to its Subcontractors; 7) Damage to the Owner's property or the property of another person or laborer; 8) The determination that there is a substantial possibility that the Work cannot be completed for the unpaid balance of the Contract Sum; and/or 9) Liens filed or reasonable evidence indicating the probable filing of such liens.

10.3 The Owner will pay the Contractor within 30 days after receipt of the Contractor's payment application, provided that the payment application has been properly submitted on a timely basis and is accompanied by all of the required documentation. The Owner may establish a cut-off date for the submission of the payment application.

11 RETAINAGE.

11.1 AMOUNT OF PAYMENTS. Subject to Paragraph 8.1, the amount of the payments to the Contractor shall be determined in accordance with the following paragraphs:

11.2 PAYMENTS. Payments under the contract shall be made at the rate of 95% of the amount set forth in the Contractor's payment application and approved by the Owner until the Work is 50% complete. When more than fifty percent (50%) of the Work has been completed, the amount retained may be reduced at the City's sole discretion. The Engineer may also, at any time, increase retainage by any amount needed to protect the City's interests with respect to any incomplete, defective or unsatisfactory Work; costs or damages incurred by the City that are subject to the Contractor's indemnification obligations; or back charges that the City may assess against the Contractor.

11.3 DOCUMENTATION. Upon request, the Contractor immediately shall supply the Owner with such information as may be requested so as to verify the amounts due to the Contractor, including but not limited to original invoices for materials and equipment and documents showing that the Contractor has paid for such materials and equipment, and so as to verify that amounts due laborers, subcontractors, and materialmen have been paid to them.

11.4 FINAL PAYMENT.

11.4.1 The final application for payment shall be itemized, and the Contractor shall ensure that the final application for payment shall contain one (1) copy of each of the following documents, if not previously delivered to the Owner: 1) All items from Paragraph 10.1; 2) Consent of the Contractor's Surety to Payment; 3) An assignment to the Owner of all warranties obtained or obtainable by the Contractor from manufacturers and suppliers of equipment and materials incorporated into the Work by written instrument of assignment in a form acceptable to the Owner; and 4) Such other documentation as required by the Contract Documents, the Owner, or applicable law.

11.4.2 The making of Final Payment by the Owner shall not constitute a waiver of Claims by the Owner for the following: 1) Liens, Claims, security interests, or encumbrances arising out of the Contract Documents that are unsettled; 2) Failure of the Work to comply with the requirements of the Contract Documents; 3) Terms of special warranties required by the Contract Documents; 4) Claims for Indemnification; 5) Claims about which the Owner has given the Contractor written notice; or 6) Claims arising after Final Payment.

11.5 ESCROW ACCOUNT. The Owner and the Contractor agree that no escrow account shall be required in connection with this Agreement and that retained funds will not earn interest.

12 CHANGE ORDERS.

12.1 A Change Order is a written instrument signed by the Owner and the Contractor stating their agreement upon a change in the Work, the amount of the adjustment or the method for computing the amount of the adjustment of the Contract Sum, if any, and the extent of the adjustment in the Project Time Schedule, if any.

13 GENERAL.

13.1 MODIFICATION. No modification or waiver of any of the terms of this Agreement or of any other Contract Documents shall be effective against a party unless set forth in writing and signed by or on behalf of a party, which in the case of the Owner shall require the signature of the Owner's Representative acting under the authority of a specific resolution of the Owner. Under no circumstances shall forbearance, including the failure or repeated failure to insist upon compliance with the terms of the Contract Documents, constitute the waiver or modification of any such terms. The parties acknowledge that no person has authority to modify this Agreement or the other Contract Documents or to waive any of its or their terms, except as expressly provided in this Paragraph.

13.2 ASSIGNMENT. The Contractor may not assign this Agreement without the written consent of the Owner, which the Owner may withhold in its sole discretion.

13.3 THIRD PARTIES. Nothing contained in this Agreement shall create a contractual relationship with or a cause of action in favor of a third party against either the Owner or the Contractor.

13.4 LAW AND JURISDICTION. All questions regarding the validity, intention, or meaning of this Agreement or any modifications of it relating to the rights and obligations of the parties shall be construed and resolved under the laws of the State of Ohio. Any suit, which may be brought to enforce any provision of this Agreement or any remedy with respect hereto, shall be brought in the Common Pleas Court of Franklin County, Ohio, and each party hereby expressly consents to the jurisdiction of such court.

13.5 STATUTE OF LIMITATIONS. Regardless of any provision to the contrary, the statute of limitations with respect to any defective or non-conforming Work that is not discovered by the Owner shall not commence until the discovery of such defective or non-conforming Work by the Owner.

13.6 NOTICES. Notices, requests, or demands by either party shall be in writing, unless otherwise expressly authorized, and shall be personally served, forwarded by expedited messenger

service, sent by facsimile transmission, or be given by registered or certified mail, return receipt requested, postage prepaid, and, in the case of the Owner, addressed to the address/FAX number set forth at the beginning of this Agreement marked "Urgent, deliver to Owner's Representative/Designee," and, in the case of the Contractor, addressed to its address/FAX number set forth at the beginning of this Agreement. Any party may change its address/FAX number by giving notice hereunder. All notices, requests, and demands shall be deemed received upon receipt in the case of personal delivery or delivery by expedited messenger service, including leaving the notice at the address provided herein during normal business hours; upon the expiration of forty-eight (48) hours from the time of deposit in the United States mail; or, in the case of a notice given by facsimile transmission, upon the expiration of twenty-four (24) hours after the transmission is sent.

13.7 CONSTRUCTION. The parties acknowledge that each party has reviewed this Agreement and the other Contract Documents and has voluntarily entered into this Agreement. Accordingly, the normal rule of construction to the effect that any ambiguities are to be resolved against the drafting party shall not be employed in the interpretation of this Agreement, the other Contract Documents, or any amendments or exhibits to it or them.

13.8 APPROVALS. Except as expressly provided herein, the approvals and determinations of the Owner shall be subject to the sole discretion of the Owner and will be valid and binding on the Contractor, provided only that they be made in good faith, i.e., honestly. If the Contractor challenges any such approval or determination, the Contractor shall have the burden of proving by clear and convincing evidence that it was not made in good faith.

13.9 PARTIAL INVALIDITY. If any term or provision of this Agreement is found to be illegal, unenforceable, or in violation of any laws, statutes, ordinances, or regulations of any public authority having jurisdiction, then, notwithstanding such term or provision, this Agreement shall remain in full force and effect, and such term shall be deemed stricken; provided this Agreement shall be interpreted, when possible, so as to reflect the intentions of the parties as indicated by any such stricken term or provision.

13.10 COMPLIANCE WITH LAWS AND REGULATIONS. The Contractor, at its expense, shall comply with all applicable federal, state, and local laws, rules, and regulations applicable to the Work. Including, but not limited to Ohio's Prevailing Wage law if applicable.

13.11 PROJECT SAFETY. The Contractor shall follow all applicable safety and health regulations during the progress of the Project and shall monitor all of its employees and its subcontractors for compliance with such safety and health regulations. In undertaking the responsibilities set forth in this Paragraph, the Contractor does not assume any duty or responsibility to the employees of any Subcontractor or supplier, regardless of tier. The Owner assumes no responsibility for the development, review, or implementation of any project safety plan or for Project safety and has no authority to direct the means and methods of the Contractor.

13.12 EQUAL OPPORTUNITY. Contractor agrees that, in the hiring of employees for the performance of work under the Contract or any subcontract, no contractor, subcontractor, or any person acting on a contractor's or subcontractor's behalf, by reason of race, creed, sex, disability or military status as defined in section 4112.01 of the Revised Code, or color, shall discriminate against any citizen of the state in the employment of labor or workers who is qualified and available to perform the work to which the employment relates. Contractor further agrees that neither it, its subcontractors, or any person on the Contractor's or subcontractor's behalf, in any manner, shall discriminate against or intimidate any employee hired for the performance of work under the

contract on account of race, creed, sex, disability or military status as defined in section 4112.01 of the Revised Code, or color. That there shall be deducted from the amount payable to the Contractor by the Owner under this Agreement a forfeiture of twenty-five dollars ($25.00) as required by O.R.C. Section 153.60 for each person who is discriminated against or intimidated in violation of this Agreement. That this Agreement may be canceled or terminated by the Owner and all money to become due hereunder may be forfeited for a second or subsequent violation of the terms of this section of this Agreement.

13.13 USE OF OWNER'S FACILITIES. The Contractor shall ensure that neither its employees, nor its Subcontractor's or material supplier's employees, regardless of tier, do any of the following without the express prior written consent of the Owner: use the Owner's cafeteria, rest rooms, or phones; use or bring any alcoholic beverages, controlled substances, or firearms on any property owned by the Owner. The Owner will not tolerate any such actions and any such action observed or made known to the Owner shall be dealt with severely.

13.14 ETHICS. By signing and entering into this agreement with the Owner, the Contractor represents that it is familiar with all applicable ethics law requirements, including without limitation Sections 102.04 and 3517.13 of the O.R.C., and certifies that it is in compliance with such requirements. The Contractor understands that failure to comply with the ethics laws is, in itself, grounds for termination of this contract and may result in the loss of other contracts with the Owner.

13.15 PROPERTY TAX AFFIDAVIT. The Contractor's affidavit given under ORC Section 5719.024 is incorporated herein.

13.16 ENTIRE AGREEMENT. This Agreement and the other Contract Documents constitute the entire agreement among the parties with respect to their subject matter and will supersede all prior and contemporaneous, oral or written, agreements, negotiations, communications, representations, and understandings with respect to such subject matter, and no person is justified in relying on such agreements, negotiations, communications, representations, or understandings.

CITY OF DUBLIN, OHIO

By: _____ By: _____

Its: _____ Its: _____

Date: _____ Date: _____

APPROVED AS TO FORM:

_____ Date: _____

Stephen J. Smith, Esq., Law Director

CERTIFICATE OF AVAILABILITY OF FUNDS

I Angel Mumma, hereby certify that I am the fiscal officer for the CITY OF DUBLIN, OHIO and that the amount of money to wit $ required to meet the cost of the attached Contract between the City and has been or will be, before the ordering of any materials, lawfully appropriated for the purpose of said Contract and the money so appropriated is on deposit or in process of collection to the credit of the appropriate fund free from any previous encumbrances. Moneys due in excess of the Contract Sum and any Contingency amount assigned thereto shall require an additional and separate Fiscal Officer's Statement of Availability which shall not be given unless the Contract adjustment is directly attributable to one of the express methods for increasing the Contract Sum under the Contract Documents; and, such process is completed in the manner required by the Contract Documents.

_____ _____

Date Angel Mumma, Finance Director

B. CITY OF DUBLIN GENERAL CONDITIONS DIVISION 100

City of Dublin Division of Engineering General Condition Division 100 can always be found at:

http://dublinohiousa.gov/dev/dev/wp-content/uploads/2013/02/City-of-Dublin-General-Conditions-Section-100.pdf

If you purchase a hard copy of the project documents the General Condition Division 100 will be on the CD included in the Bid Document. The General Condition Division 100 will also be posted with the project on the City of Dublin's website where the project documents are available for download.

C. SUPPLEMENTAL GENERAL CONDITIONS

THERE ARE NO SUPPLEMENTAL GENERAL CONDITIONS FOR THE CITY OF DUBLIN, SR 161 / RIVERSIDE DRIVE ROUNDABOUT (PART 1) AND RIVERSIDE DRIVE REALIGNMENT AND OTHER PUBLIC IMPROVEMENTS (PART 2) PROJECT

D. SUPPLEMENTAL SPECIFICATIONS

1) COORDINATION WITH ADJACENT PROJECTS AND COMMUNICATIONS:

a) Roles/Responsibilities:

i) The Program Management Consultant (PMC) Team is employed by the City of Dublin in order to manage the interfaces between the projects in association with the City of Dublin Capital Improvements Plan and the Bridge Street District Development. The PMC serves as the point of contact for management of the programs projects. Key interfaces between the projects will involve project shared work limits/overlaps, maintenance of traffic coordination, shared detour routes, private utility coordination, multiple project scope dependencies, multi-project communications, notice of service interruptions, construction timing, and scheduling. The PMC's execution of these program components shall not replace the requirements of each respective contractor's management staff. It is intended to enhance the ability of each project to achieve the individual project goals while minimizing the impact to one another and preserve the intended functions of the existing rights of way.

ii) The awarded contractor and their subcontractors are required to incorporate the work of the private utility relocations into their CPM Schedule for the project. All payment for required CPM Scheduling Type B shall be included for payment under the referenced pay item found in Miscellaneous, Part 2 (RS Drive Realignment CIP 13-015). The City of Dublin Specification 108.03 is utilized in conjunction with this pay item. No additional payment is made for schedule coordination with the PMC or the private utility companies. The contractor is required to provide the CPM Schedule file in .xer format using Primavera version 6.0 or later to the PMC as requested and no less than 1 time per month. In addition to the requirements outlined in City of Dublin Specification 108.03, the contractor is required to hold group meetings with the private utility companies and subcontractors in order to develop the projects baseline schedule. The contractor is required to incorporate all work elements associated with Part I, SR161 Roundabout – CIP 13-014 and Part II, Riverside Drive Realignment – CIP 13-015, and the work associated with the private utility companies identified.

iii) Cooperation between Contractors: This section is used in conjunction with the City of Dublin CMS specification section 105.07, Cooperation with Utilities and 105.08, Cooperation between contractors. The additional language below is not intended to replace the contents of these sections. In the event

the below contents conflict with the referenced specification sections above, the strictest requirements shall govern.

The contractor is responsible for providing adequate management staff in order to participate in the coordination between the multiple contractors. This may include attendance of interface focused coordination meetings, attendance at progress meetings, and field coordination meetings. Costs associated with the cooperation between contractors shall be included as a cost of managing the project and no separate pay item will be made.

The contractor will be responsible to provide as built information as requested by the PMC staff or the City of Dublin for the purposes of adequately addressing the project interfaces that may exist. Similarly, field records may also be requested at any time in order to address coordination issues that are identified. The Contractor shall provide all information requested promptly. Costs associated with the cooperation between contractors shall be included as a cost of managing the project and no separate pay item will be made.

INSPECTION

All inspections shall be provided by the City and American Electric Power will provide inspection staff associated with the installation of their facilities.

CPM SCHEDULING

The contractor and their subcontractors will be required to incorporate the work of the private utility relocations into their CPM Schedule for the project. Payment for all required CPM Scheduling Type B shall be included for payment under the referenced pay item found in Miscellaneous, Part 2 (RS Drive Realignment CIP 13-015). The City of Dublin Specification 108.03 will be utilized in conjunction with this pay item. No additional payment will be made for schedule coordination with the PMC or the private utility companies. The contractor will be required to provide the CPM Schedule file in .xer format using Primavera version 6.0 or later to the PMC as requested and no less than 1 time per month. In addition to the requirements outlined in City of Dublin Specification 108.03, the contractor will be required to hold group meetings with the private utility companies and subcontractors in order to develop the projects baseline schedule. The contractor will be required to incorporate all work elements associated with Part I, SR161 Roundabout – CIP 13-014, Part II and Riverside Drive Realignment – CIP 13-015, and the work associated with the private utility companies identified.

The Contractor shall provide a 6-week look ahead schedule within 15 days of the City issuing the notice to proceed for construction. A Full Baseline CPM Schedule shall be submitted within 45 days of the notice to proceed being issued, and updates shall be submitted no less than once a month.

b) Pay item for Type B – CPM Schedule has been included in the Riverside Drive Realignment (Part 2) plans. Payment for all CPM Scheduling associated with this contract shall be made under this pay item.

c) Personnel & Team Members
   i) Jim Norden
      Construction Contract Administrator
      jimn@resourceinternational.com
      614.560.6413

   ii) Robin Sebring, PE
      Lead Resident Inspector
      robins@resourceinternational.com
      614.962.4896

   iii) Doug Fleck, CET
      Resident Inspector
      dougf@resourceinternational.com
      614.402.2615

   iv) Gailard Tigner
      Inspector
      gtigner@gpdgroup.com
      614.371.5122

d) PMC Contact List

i) Mandy K. Bishop, PE, SI
Program Management Consultant
mbishop@gpdgroup.com
614.410.4672

ii) Daniel Weis, CCM
Deputy Program Manager
danielweis@hillintl.com
614.286.9391

iii) Kevin Conklin
Utility Coordinator
kevinconklin@hillintl.com
937.477.7431

2) PROJECT INTERFACES

Each individual project will interface with other projects in a different manner depending on the timing of construction activities that are occurring and the Contractor's sequence of construction. The Contractor will be required to communicate with the PMC team on a daily basis to ensure any deviations to the contractor's work plans are being adequately communicated to all contractors and stakeholders with a vested interest in the projects.

a) Definitions: For the purposes of coordinating the multiple projects and interface types associated with this contract, the following interface types have been defined as follows:

i) Shared Project Limits: Shared project limits occur when the work of another contractor is occurring inside the work limits defined in the project documents. This requires the affected contractors to coordinate their work with the PMC and one another. Contractors will be required to provide accommodations for the shared work zone to one another based on the contractor's CPM Schedule and the importance of the work occurring at a given time. The importance to the work will be assessed by the PMC based on the overall program importance to the specific scope being impacted and will consider the specific impacts associated with each project involved. The Contractors of this contract are required to allow access to work by another

contractor within the project area where a Shared Project Limit Interface is to occur.

ii) Shared MOT Setups: Throughout the course of the project, when a scope of work by another contractor is to be performed adjacent to the work areas associated with this contract. The contractor is required to coordinate the maintenance of traffic setups with the adjacent project and may be required to revise existing maintenance of traffic schemes in order to facilitate the construction of both projects and maintain traffic as planned in the documents.

iii) Shared Detour Routes: Throughout the course of the project, the traffic detours that are required for the completion of this work will overlap with the detour routes of other contracts. The contractor is required to provide 3 days prior notice to any traffic maintenance installations in order to allow for adequate evaluation of the existing conditions associated with other detour routes that are installed. The contractor may be required to revise the maintenance of traffic schemes in order to facilitate the construction of both projects and minimize the length of the project detour routes.

iv) Scope Dependency: A scope dependency interface is where the scope of this contract has a direct relationship with the scope of work being completed by another contractor. Scope dependency interfaces require the contractor to coordinate their work with the contractor performing the work of which the contract scope is dependent on. In situations where this contract's work is dependent on another contractor's work, the contractor will be required to maintain safe work conditions on the project and utilize the CPM schedule to identify the scope dependency interface. The contractor shall make every attempt to complete their work so as not to impede the progress or cause delays associated with the work of others.

b) Coordination Table of Key Interfaces

i) The below table is a summary of the anticipated interfaces with adjacent projects. Detailed descriptions of each interface and the requirements of this contract are found in sections 3, 4, and 5 below.

SS Table 1.0 PROJECT COORDINATION TABLE

PROJECT OWNER	PROJECT NAME	PROJECT DESCRIPTION	INTERFACE TYPES			
			SHARED PROJECT LIMITS	SHARED MOT SETUPS	SHARED DETOUR ROUTES	SCOPE DEPENDENCY
ODOT	ODOT I 270/US 33 interchange project	Interchange improvements at the intersection of State Route 33 and I 270 , West of the Project site	NO	NO	YES	NO
CITY OF DUBLIN	City of Dublin CIPP Lining 2015 project	Lining Existing Sanitary Sewer from Emerald Parkway to Martin Road along Riverside Drive	YES	YES	NO	NO
CRAWFORD HOYING	Bridge Park East Development (A Block)	Site development project consisting of building structures, new roadway systems and site improvements	YES	YES	NO	YES
CRAWFORD HOYING	Bridge Park East Development (B Block)	Site development project consisting of building structures, new roadway systems and site improvements	YES	YES	NO	YES
CRAWFORD HOYING	Bridge Park East Development (C Block)	Site development project consisting of building structures, new roadway systems and site improvements	YES	NO	NO	YES
CITY OF DUBLIN	Dale Drive – Tuller Ridge Drive Temporary Connector	New road construction providing north/south connectivity from SR 161 to Tuller Road. Construction of Ductbank for Dublink Facilities and American Electric Power underground ductbank system	YES	YES	YES	YES
CITY OF DUBLIN	John Shields Parkway Phase 1	Installation of new road and infrastructure	YES	NO	NO	YES
AMERICAN ELECTRIC POWER	Interim Pole Relocation SR 161/Dale Dr.	New pole installation in revised locations to allow specific elements of the 161RA and RS Drive project to advance	YES	YES	NO	YES

PROJECT OWNER	PROJECT NAME	PROJECT DESCRIPTION	INTERFACE TYPES			
			SHARED PROJECT LIMITS	SHARED MOT SETUPS	SHARED DETOUR ROUTES	SCOPE DEPENDENCY
AMERICAN ELECTRIC POWER	Ductbank Cable pull Phase 1	Pulling cable from the SR161/Dale Drive Intersection to the Tuller Road RS Drive intersection along the new Dale Tuller Temporary connector	YES	NO	YES	YES
AMERICAN ELECTRIC POWER	Ductbank Cable pull Phase 2	Pulling cable from the SR161/Dale Drive intersection to approximately 700' south of Martin Road on RS Drive.	YES	YES	NO	YES
AMERICAN ELECTRIC POWER	Pole Relocation at Tuller and RS Drive	New pole installation in revised locations to allow specific elements of the RS Drive project to advance	YES	YES	YES	YES
AT&T	Point conflict Relocations Project	Relocation of point conflicts found inside the work limits of both Part 1 and Part 2	YES	YES	NO	YES
AT&T	Aerial to Underground Station 94+00 to Martin Rd.	Aerial to underground Station 94+00 to Martin Road	YES	YES	NO	YES
AT&T	Tim Horton's Temporary Re-feed from Dale Dr.	Re-feed temporary service to Tim Horton's Facility	YES	YES	NO	NO
Dublink	Dublink Relocation SE 161RA	Relocation of existing facilities in order to install scope elements of Part 1	YES	YES	NO	YES

3) CITY AND STATE PROJECT COORDINATION

a) Projects Requiring Coordination
   i) ODOT I 270/US 33 interchange project
   ii) City of Dublin CIPP Lining 2015 project
   iii) Dale Drive – Tuller Ridge Drive Temporary Connector
   iv) John Shields Parkway Phase 1

b) Critical Interfaces / Milestones

   i) ODOT I270/US 33 interchange project. This project will be under construction when this contract starts construction. Detour Routes will be established as necessary to complete the work of the I270/US 33 interchange project and will be modified based on the project phasing. Communications with the PMC will be required by the City's contractor in order to ensure that adequate consideration has been made for the existing detours created by the I270/US33 interchange project and the maintenance of traffic associated with this contract.

   ii) City of Dublin CIPP Lining 2015 Project. This project is currently under construction and is anticipating completion in March 2015. Should the project not complete as scheduled, overlapping project limits may exist until the project can be completed. The City's Contractor associated with this contract will be required to participate in coordination meetings in order to ensure the objectives associated with both contracts are able to be executed with minimal interference to one another. Sanitary manhole access for lining inversion may be required within the project limits defined in the bid documents. Additional consideration for the bypass pumping installation found along the bypass lane may also require contractor consideration.

   iii) Dale Drive – Tuller Ridge Drive Temporary Connector. This project consists of installing ductbank for AEP and Dublink facilities and the installation of the new North-South Connector from Dale Drive to Tuller Ridge Drive that will be used as a detour route for the work performed under MOT phases 2, 3, and 4, as well as the sub phases of these traffic setups. Coordination of maintenance of traffic scopes may be required in the Tuller Rd. / Riverside Drive intersection as well as the Dale Dr. / SR 161 intersection.

   iv) John Shields Parkway Phase 1. This segment of road is scheduled for completion in May of 2015. The contractor performing work within this

contract will be required to match existing conditions as identified in the plans. This will require connections including but not limited to: existing grade, waterline tie in connections, storm pipe connections, electrical conduits, and curb alignments.

4) DEVELOPER PROJECT COORDINATION

a) Projects Requiring Coordination
   i) Bridge Park Block C Streets and Development
   ii) Bridge Park Block B Streets and Development
   iii) Bridge Park Block A Streets and Development

b) Critical Interfaces / Milestones
   i) Bridge Park Block C Streets and Development. Block "C" in the bridge street district development consists of the area adjacent to the eastern curb between future Tuller Ridge Drive and future Bridge Park Avenue. The Part II scope of this contract will construct the intersections of each Tuller Ridge Drive/Riverside Drive as well as Bridge Park Avenue/Riverside Drive. Coordination with the adjacent contractor will be required for the construction of all street elements and utility connections in the future Tuller Ridge Drive and Bridge Park Avenue Intersection. Due to the future building plans, the proximity of the buildings, and the street improvements planned in this area by this contract, close coordination will be required in order to execute both scopes of work. Multiple scope dependency interfaces have been identified in the project. Utility tie-in connections made by the development contractors are to be coordinated with the work as outlined in the plan sets. In the event the developer has constructed the facility intended for connection to portions of this contract, the City contractor will make the tie-in connection. These conditions may exist regarding waterline installations, sanitary, storm piping, electrical conduit and other underground utilities.

      (1) All underground work occurring on this block behind the east curb of realigned Riverside Drive shall be completed no later **than September 30, 2015**. The scope to be completed includes all Eastern curb installations, underground lighting conduit, structural foundations for all scope elements, electrical conduit, communications conduit, storm piping, sanitary piping, curb installation, sub-base preparation, and 304 stone.

(2) The Development contractors will begin work immediately following the above scope on the West elevations of their buildings. Upon completion of the developer's work on the west elevation, the City contractor will complete all surface finishes immediately following the building construction. The brick sidewalk installation, planter curbs, light poles, signal poles and remaining finishes are to be installed following the installation of all work on the elevation by the Developer. All scope work in the identified area associated with this contract shall be completed no later than **June 30, 2016.**

ii) Bridge Park Block B Streets and Development. Block "B" in the bridge street district development consists of the area adjacent to the eastern curb between future Banker Drive and future Bridge Park Avenue. Coordination with the adjacent contractor will be required for the construction of all street elements and utility connections in the future Banker Drive and Bridge Park Avenue Intersections. Due to the future building plans, the proximity of the buildings, and the street improvements planned in this area by this contract, close coordination will be required in order to execute both scopes of work. Multiple scope dependency interfaces have been identified in the project. Utility tie in connections made by the development contractors are to be coordinated with the work as outlined in the plan sets. In the event the developer has constructed the facility intended for connection to portions of this contract, the City contractor will make the tie-in connection. These conditions may exist regarding waterline installations, sanitary, storm piping, electrical conduit and other underground utilities.

(1) All underground work occurring on this block behind the east curb of realigned Riverside Drive shall be completed no later **than September 30, 2015**. The scope to be completed includes all Eastern curb installations, underground lighting conduit, structural foundations for all scope elements, electrical conduit, communications conduit, storm piping, sanitary piping, curb installation, sub base preparation, and 304 stone.

(2) The Development contractors will begin work immediately following the above scope on the West elevations of their buildings. Upon completion of the developer's work on the west elevation, the City contractor will complete all surface finishes immediately following the building construction. The brick sidewalk installation, planter curbs, light poles,

signal poles and remaining finishes are to be installed following the installation of all work on the elevation by the Developer. All scope work in the identified area associated with this contract shall be completed no later than **July 31, 2016.**

iii) Bridge Park Block A Streets and Development. Block "A" in the bridge street district development consists of the area adjacent to the eastern curb between future Banker Drive and existing State Route 161. Coordination with the adjacent contractor will be required for the construction of all street elements and utility connections in the future Banker Drive and in positions where the utilities are stubbed outside the right of way by the work performed under this contract. Multiple scope dependency interfaces have been identified in the project. Utility tie in connections made by the development contractors are to be coordinated with the work as outlined in the plan sets. In the event the developer has constructed the facility intended for connection to portions of this contract, the City contractor will make the tie in connection. These conditions may exist regarding waterline installations, sanitary, storm piping, and electrical conduit.

(1) No work shall be permitted to interfere with Tim Horton's ability to maintain operations until **after January 11, 2016**. This includes any construction that would restrict access to the Tim Horton's parcel from State Route 161. Please see the below area map. The Maintenance of Traffic depicted in the Part 1 documents is only to be installed as directed.

SS Area Map 1.0

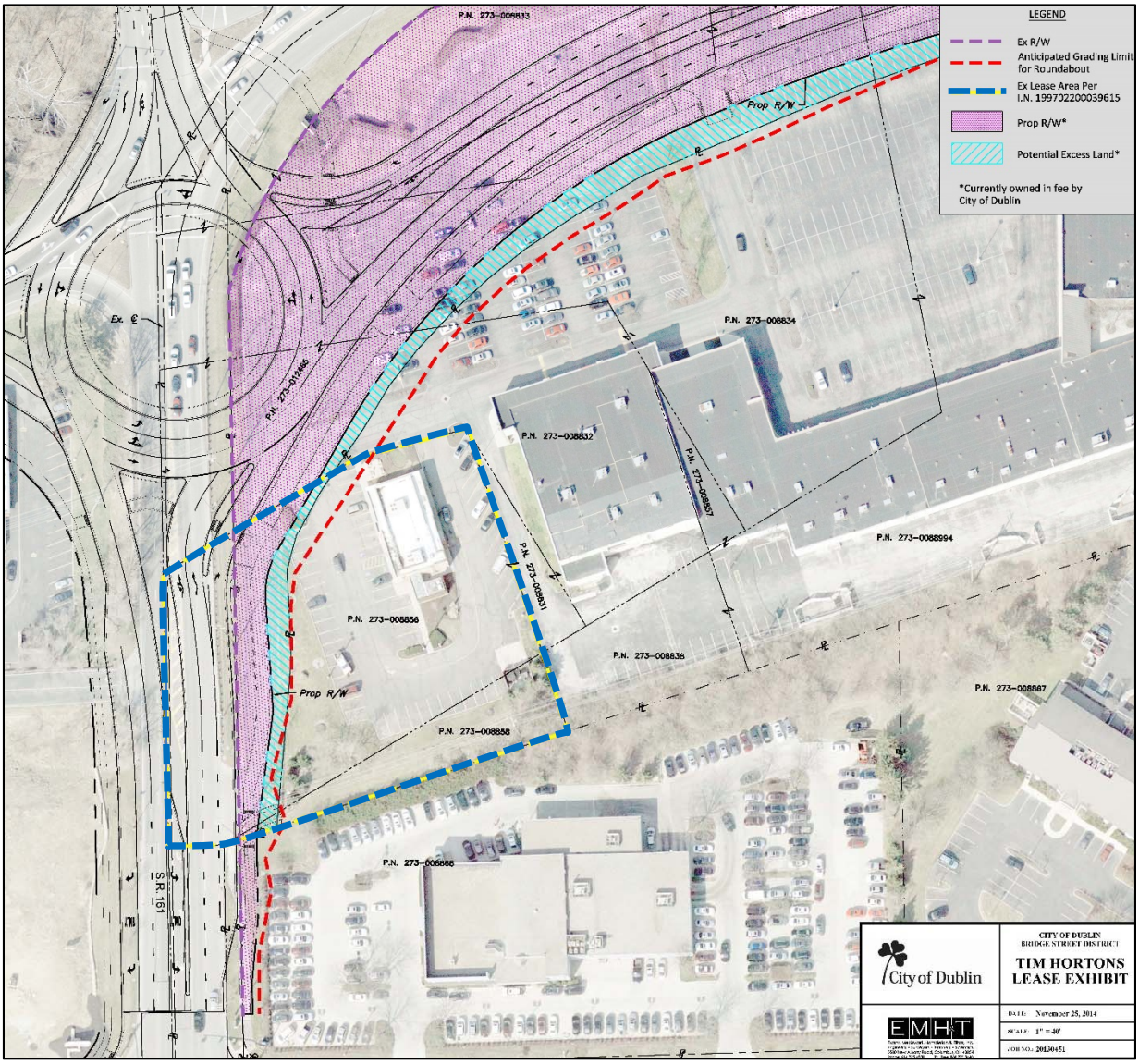

5) PRIVATE UTILITY PROJECT COORDINATION

Projects Requiring Coordination: The intent of this section is to inform the contractor of work occurring either within the project limits of, or adjacent to the construction limits outlined in the plan sets. It is the Contractor's responsibility to coordinate their work with the private utilities as required. The utility owner may be required to brace, temporarily support, or relocate their respective utilities so that the proposed improvements can be constructed.

a) The below private utility relocation efforts will require consideration with the scope of work performed in this contract.

   i) AEP Interim Pole Relocation SR 161/Dale Dr.
   ii) AEP- Ductbank Cable pull Phase 1
   iii) AEP- Ductbank Cable pull Phase 2
   iv) AEP Interim Pole removal at Tuller Rd/Riverside Drive Intersection
   v) AT&T- Point conflict Relocations Project
   vi) AT&T- Aerial to Underground Station 94+00 to Martin Rd.
   vii) AT&T- Tim Horton's Temporary Re-feed from Dale Dr.
   viii) Dublink Relocation SE 161RA & Joint User Relocations

b) Critical Interfaces / Milestones

   i) AEP Interim Pole Relocation SR 161/Dale Dr.: The interim Pole relocation project is required to adjust existing aerial facilities for the construction associated with this contract. This work was started by AEP in February of 2015 and is anticipated for completion prior to the start of construction associated with this contract. This scope realigns existing aerial poles so the construction of this contract can advance. This also will remove existing poles that are found to be in conflict and are necessary for the construction of this contract. The scope dependency interfaces requiring coordination associated with this contract require the City Contractor to verify the position of existing poles and coordinate the removal of poles as necessary to complete the scope of work. Currently all poles are represented in the contract documents associated with this work.

   ii) AEP- Ductbank Cable pull Phase 1: AEP will be installing electrical cable in a ductbank from approximately 20' north of the Dale Dr. / SR161 intersection, north on Dale Dr. to the new Dale-Tuller Connector, north along the connector onto existing Tuller Ridge Dr. to the Tuller Rd. intersection. The

ductbank will continue from the Tuller Rd./Tuller Ridge Intersection west to the Riverside Drive/Tuller Rd. Intersection. This will allow the abandonment of Aerial Poles in the Riverside Drive/Tuller Road Intersection. This work will be occurring beginning in April of 2015 and is scheduled for completion by September of 2015. Due to the construction limits and proximity to our work, it will require coordination with the PMC for both AEP and the City's Contractor.

iii) AEP- Ductbank Cable pull Phase 2: This project consists of AEP pulling cable through the ductbank installed by the City's Contractor performed under this contract. Once the AEP Ductbank system is completed, the City's Contractor is required to provide notification to the City, PMC, and AEP.

iv) AEP Interim Pole removal at Tuller Rd/Riverside Drive Intersection: There are 4 poles scheduled for removal near the Tuller Rd./ Riverside Drive intersection. These poles will be removed by AEP following the completion of the Ductbank Cable Pull Phase 1 Project. This work is anticipated for completion no earlier than 10/31/15. The City's Contractor will be required to sequence the construction so the work requiring the pole removal would not occur until **after 10/31/15.**

v) AT&T- Point conflict Relocations Project: The design documents have identified multiple areas where AT&T existing facilities require elevation adjustments in order to install the scope of work. AT&T has been issued a permit for the relocation efforts to remove the conflicts with existing facilities. These scope dependencies will require coordination with the City Contractor and the PMC. Once the awarded contractor has been selected and their sequence of construction has been determined, any remaining conflicts can be resolved in advance of the work performed by the City contractor.

vi) AT&T- Aerial to Underground Station 94+00 to Martin Rd.: AT&T will be installing new conduit and cable from approximately station 94+00 to Martin Road. The majority of the conduit alignment is found behind the west edge of pavement. Due to the proximity of their work and maintenance of traffic setups required, this work will need to be coordinated with the PMC and AT&T to ensure a minimum of 1 lane northbound and southbound on Riverside Drive is available while this work is being performed.

vii) AT&T- Tim Horton's Temporary Re-feed from Dale Dr.: This Minor relocation project will be occurring near the Dale Drive/SR161 intersection and consists of approximately 120 feed of conduit being installed in the westernmost lane of Dale Drive. This work is anticipated to be completed prior to June 1, 2015 and the project interface for each contractor should be minimal.

viii) Dublink Relocation SE 161RA: An existing underground conduit ductbank was identified by the design team as being in conflict with the proposed facilities in the SE Corner of the roundabout, adjacent to the Laydown area/Field Offices site. A permit to complete this work was issued by the City in February 2015 and work is anticipated to be completed prior to construction. In the event the work is not completed, minor coordination may be required. Telecomm companies on aerial poles will also be pulling cables through this new facility inside the work limits.

6) SERVICE INTERRUPTIONS, OUTAGES, AND MAINTENANCE OF TRAFFIC

a) Objectives:

i) Maintain a safe work zone for all construction personnel as well as pedestrian and vehicular traffic throughout the contract.

ii) Minimize the length of time an outage/service interruption is to occur and the number of times an outage/service interruption is to occur.

iii) All work associated with this contract and interfacing projects shall not impede traffic to less than a single lane in all directions at any time.

b) Requirements:

i) Advance Notice and Communications:

(1) Any scheduled interruption to public services associated with this contract requires a minimum 5-day notice provided to the PMC and the City in order to allow for proper consideration of adjacent projects.

(2) Working Restrictions and hours of operation: Any planned work requiring a service interruption or Outage shall be performed at a time of day that is deemed by the City to be the least impactful to the affected parties. All outage/service interruptions require a minimum 5-day notice and written authorization from the PMC or Owner prior to execution.

(3) Unscheduled interruptions shall be communicated immediately to the PMC and the City of Dublin so appropriate action can be taken. Should an incident occur during off hours, the contractor is responsible for initiating their emergency response plan and notifying the PMC and the City in addition to any emergency services that may be necessary to minimize the interruption.

ii) Traffic Maintenance is a critical component of the Bridge Street District Development and the execution of the scope of work in this contract. MOT shall be per the approved plans unless otherwise approved by the City Engineer.

(1) Every effort shall be made by the PMC and the project contractors to ensure safe accessible conditions are maintained everywhere possible. The contractor shall provide a site logistics plan and traffic maintenance plan prior to commencing work. The site logistics plan and maintenance of traffic plans are to outline the areas impacted by the work performed under this contract and the anticipated timeframes of the impacts. No maintenance of traffic setups can be installed on the project until this plan has been submitted and reviewed by the PMC and the City of Dublin. All traffic maintenance shall be completed in accordance with the maintenance of traffic plans and specifications. As such, a minimum 1 lane in each direction shall be required to be maintained at all times in conjunction with the execution of the work.

(2) In the event another project has captured an area typically utilized for vehicular or pedestrian travel and is in proximity to the permitted work zone, the contractor shall coordinate their work with the existing maintenance of traffic setups to ensure a minimum of 1 lane in all directions is maintained at all times. The contractor(s) may be required to share work limits or maintenance of traffic setups with another project in order to perform the contract work.

(3) Adjacent Property Access shall be maintained at all times. In the event the contract work requires impeding access to an adjacent property, every effort to minimize the disruption to the property access shall be maintained. When the contractors work impedes access to an adjacent property the contractor shall not vacate the area of work until temporary measures for maintaining access are implemented. No separate pay item

will be made for temporary measures. All costs associated with installing temporary work to maintain safe access to adjacent properties shall be included in the applicable pay items for the items being installed.

iii) Disincentive for Non-compliance: If at any time the contractor fails to maintain a minimum of 1 lane in all directions in conformance with the maintenance of traffic plans and specifications, the contractor shall be subjected to a $200.00/minute disincentive.

WORKING HOURS

All work associated with the project shall be constructed from 7 A.M. to 7 P.M., Monday through Saturday. If the contractor wishes to work on Sunday, a written request must be submitted to the contract administrator for the project, and City approval is required. Requests for Sunday work to be performed shall be made a minimum of 3 calendar days prior.

Work identified as required to be completed on Night Shift shall be completed between the hours of 8 P.M. and 5 A.M. and temporary traffic control measures are to be installed and removed daily. Costs associated with these traffic control measures are to be included in ITEM 614 – MAINTANANCE OF TRAFFIC.

The Contractor may request modification of these working hours in writing with appropriate explanation and justification for review by the Program Management Consultant and approval by the City Engineer. Any alteration to the working hours above will be evaluated on a case-by-case basis, and must be made with the best interest of the City and local traffic conditions in mind.

STORAGE OF EQUIPMENT AND MATERIALS

No materials, including pipe, shall be stored within twenty (20) feet of any intersecting street or driveway. During non-working hours, storage of equipment shall comply with these same requirements and shall not in any way relieve the Contractor of their legal responsibilities or liabilities for the safety of the public.

CONSTRUCTION NOISE

Any device shall not be operated at any time in such a manner that the noise created substantially exceeds the noise customarily and necessarily attendant to the reasonable and efficient performance of such equipment.

TRAFFIC CONTROL –CHANGE IN DUBLIN STANDARD

The Contractor shall perform permanent signing as identified in the plans. The City *has historically* fabricated and installed all permanent traffic control signs. The Contractor shall perform all Maintenance of traffic signing with the maintenance of traffic.

7) PROJECT MILESTONES AND WORK AREA CONSTRAINTS

a) Interim Milestones will be required for this project. Table SS.01 identifies the Starting and Ending Locations of the Phase 1 work associated with this contract. They shall be targeted in all project schedules and updates. The Contractor shall provide all necessary resources in order to complete the project within the allotted times.(i.e. multiple crews, multiple shifts, etc.).

SS Table 2.0

ITEM	SCOPE	Milestone Date Required
PROJECT SUBSTANTIAL COMPLETION	Reference "Section 6, Work schedule, Substantial Completion and Final Completion". Also Reference SS Table 3.0 Disincentive Table	September 15, 2016
PROJECT FINAL COMPLETION	Reference "Section 6, Work schedule, Substantial Completion and Final Completion"	October 15, 2016
Start lane closures on SR 161	Eastbound and Westbound Lane Closures on SR161 can begin	Start on or After January 11, 2016
Tim Horton's Parcel Disturbance		Start On or After January 11, 2016
MOT Phase 1 Temporary interconnect	All temporary interconnect work	Required prior to installing MOT Phase 2
COTA Park and Ride Relocation	Bus Stop and all work associated with relocating the bus pad to Dale-Tuller Connector	Required prior to installing MOT Phase 2
Tuller Rd. AEP Pole Relocations	Work required where poles exist	Cannot be scheduled until after 10/31/15
C Block	Underground utilities	September 30, 2015
C Block	(east back of curb finishes)	June 30,2016
B Block	Underground Utilities	September 30, 2015
B Block	(east back of curb Finishes)	July 31, 2016

b) **Disincentive Contract**

i) The Contractor shall complete all critical work and safety items according to the Disincentive Contract Table. The Disincentive Contract Table is located below. In the event the Contractor impedes the flow of traffic subsequent to the opening to unrestricted traffic, the Contractor shall be assessed a disincentive according to the Disincentive Contract Table.

ii) Critical work is shown in the Disincentive Contract Table.

iii) Critical work is defined as having the designated section of work open to unrestricted traffic as shown in the table, or the entire project if not otherwise listed.

iv) Unrestricted traffic is defined as all traffic lanes being available for use at their final design width with all markings, RPM's, and safety features installed, along with no restrictions within 2 feet of the edge line on the shoulders.

v) **Disincentive Amount:**
The Contractor will be assessed a Disincentive according to the Disincentive Contract Table.

SS Table 3.0 Disincentive Contract Table			
Description or Location of Critical Work	**Completion Date**	**Time Period**	**Disincentive $ per time period**
Substantial Completion - MOT 3A, 3B, and 4 shall begin no sooner than January 11, 2015. All work requiring lane restrictions from 2 lanes EB and 2 lanes WB, to 1 Lane EB and 1 Lane WB. All Lane restrictions shall be removed at the completion of work. This Scope of work is further defined under Work Schedule, Substantial Completion, and Final Completion.	September 15, 2016	Day	$5,000.00

vi) Extensions of time will be for calendar days and calculated in accordance with The City of Dublin General Conditions 108.06 except as follows: no extensions of time will be granted for delays in material deliveries (unless such delays are industry wide), labor strikes (unless such strikes are area wide) and inclement weather except in cases of area flooding, blizzard conditions, damaging wind or local tornado damage.

vii) **WORK SCHEDULE, SUBSTANTIAL COMPLETION, AND FINAL COMPLETION**

Substantial Completion of this project is defined as all work required in phases 1,2,3,4, and the subsequent sub-phases associated with these phases. Final pavement and pavement markings on State Route 161 and the area south of the roundabout on Riverside Drive. The new roundabout shall be opened to its new alignment with final pavement markings and all required signage throughout the entire work zone shall be installed. All associated infrastructure associated with Part I of this contract and all underground utilities are be installed for Parts 1, 2, and 3 for the project to be substantially completed. At substantial completion of the project, 2 lanes eastbound and westbound are to be restored. All lanes south of the roundabout are to be restored, and one lane northbound and one lane southbound are to be made fully functional. All Temporary maintenance of traffic appurtenances are to be removed with the exception of that which is required for the remaining scopes of work found in phases 5 and 6.

viii) Substantial completion date as defined above, shall be completed by **September 15, 2016**. Should the contractor fail to reach substantial completion by this date, the City shall enforce a disincentive at a rate of $5,000.00 per calendar day until the contractor has completed the work.

ix) Final Completion for this project is defined as the full functional use of all facilities including plantings, pavement markings, signage, trench restoration, removal of traffic control devices, demobilization from the site, and all punchlist items completed. All remaining work associated with MOT Phase 5,6, and sub phases as defined in the plans.

x) Final completion date as defined above, shall be completed by **October 15, 2016**. Should the contractor fail to reach substantial completion by this date, the City shall enforce liquidated damages as identified in the City of Dublin General Conditions, table 108.07-1, schedule of liquidated damages.

8) PERMITS AND RESTRICTIONS

a) Tree Clearing

i) A *United States Fish & Wildlife Service Coordination for Indiana Bat* coordination letter has been processed and clearance received to cut trees in advance of March 31. Most trees will be cut in advance of the issuance of the "Notice to Proceed" by a contractor already selected by the City but not necessarily by the bid-opening date. The tree clearing contractor is removing all trees cut from the site and leaving stumps cut flush.

ii) Trees will not be cleared in advance of the project along the proposed shared-use path location from approximately station 400+50 to 407+75 (as stationed along the shared-use path) on the east side of Riverside Drive.

iii) All trees have not been cleared along the west side of Riverside near the Tuller Road intersection and the Contractor will need to clear as part of the contract. Additional tree clearing shall only occur beginning October 1 and before March 31. The City recommends a field walk to review trees and areas marked for clearing.

b.) Restricted work zone Timeframes

NOTICE OF INTENT

A Notice of Intent (NOI) has been filed with the Ohio Environmental Protection Agency (OEPA). The NOI was filed on February 3, 2015 and the NOI approval is anticipated to be received on or about March 15, 2015. A copy shall be kept on file in the job trailer at all times.

WATERLINE PERMIT TO INSTALL – SR 161 / RIVERSIDE DRIVE ROUNDABOUT (PART 1)

A waterline Permit to Install (PTI) is required for Part 1 of the contract. The permit is anticipated to be available on or before July 15, 2015. The contractor shall not assume this work is available until July 15, 2015 or after and shall schedule the work in accordance with this constraint.

SHARED-USE PATH ALONG RIVERSIDE DRIVE (SUP STATION 400+00 TO 412+50)

Right-of-way acquisition is underway for the following properties:

MR/TSARR OWNER, LLC (PID 273-008269)
RIVERPARK GROUP, LLC (PIDs 273-009134, 273-009135)
PATRICK W. HITEMAN (PIDs 273-008359, 273-008267)
KAREN MICHELL R. FRIEDMAN (PID 273-008336)
FOUR FIVES, LLC (PID 273-008235)

No entry onto these properties shall be permitted without written authorization from the City. Work on the shared-use path is precluded from occurring until

right-of-way is acquired and tree clearing can resume. This work area shall not be assumed to be available until **October 1, 2015. Please note this restriction aligns with Tree clearing requirements enforced by USFWS.**

ACCESS EASEMENT FOR STAIR CONSTRUCTION

a. Access for construction of the stairs from the bypass lane to Kiwanis Park is per the attached map. Access for equipment and personnel shall be at 6239 Riverside Drive. The contractor may use the area but may not block the drive or other access. Equipment shall be staged and stored in an orderly manner and only in spaces designated for City use. Paving equipment will be size limited to the available path width.

b. Easement Map

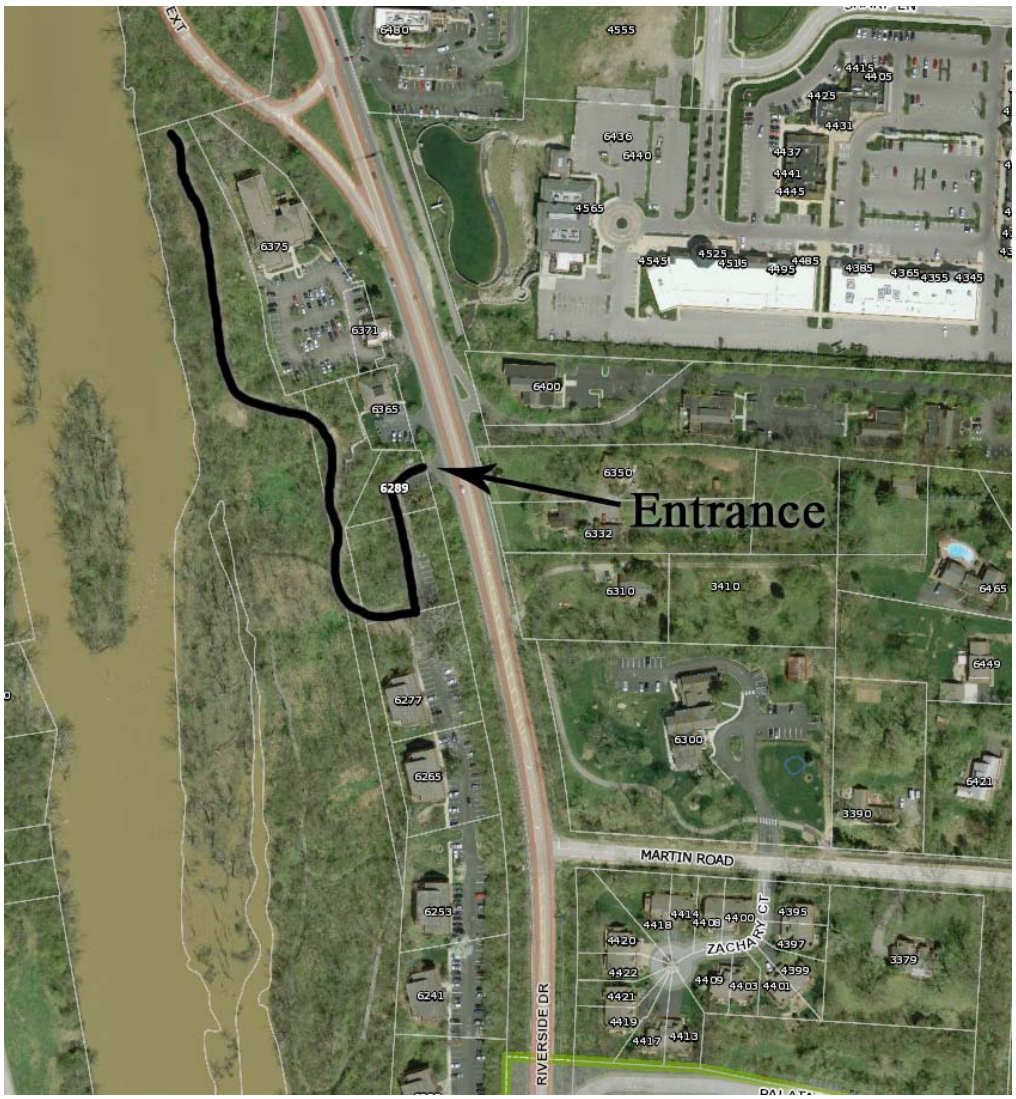

OHIO DEPARTMENT OF TRANSPORTATION (ODOT PERMITTING)

An ODOT permit is required for the AEP duct bank installation south of Martin Road in Riverside Drive. The work is generally located between STA 77+00 and STA 84+00 in the Part 1 plan documents.

An ODOT permit is required for work within limited access right-of-way under I-270 and approximately located between STA 133+00 and STA 136+87 in the Part 2 plan documents.

The City is responsible for obtaining the permit. Preliminary coordination has been performed. The contractors CPM schedule will be utilized to inform the owner when construction will be occurring in between the stations identified above so as not to let the permits lapse. The Contractor will be responsible to notify the contract administrator if the baseline CPM schedule identifies timing deviations for the work performed in this area of the project.

WORK IN THE FLOODWAY/FLOODPLAIN

A local floodplain permit has been secured. The work in the floodway/floodplain is contingent upon creating "No Rise" in water elevation. Therefore, grades in the disturbed work area shall be restored to existing elevations.

PROPOSAL

No extra compensation will be paid to the Contractor by reason of compliance with any of the requirements indicated in the Specifications. Payment shall be deemed to be included among the several items, as bid upon, unless otherwise specifically provided.

9) FESTIVALS AND CITY EVENTS

a. Periodically the City will have community events and festivals that will require consideration for the construction activities associated with this contract. Events not listed may come up periodically that will require additional coordination with the work of this contract and all dates identified are subjected to change. The maintenance of traffic setups accommodate many of the events occurring in the community without further consideration. At a minimum, for the following event dates, the contractor shall ensure the work limits have been cleaned from debris and all construction materials are stored safely and securely. The streets shall be swept 1 day prior and as directed by the project inspection staff throughout the project to maintain the safest construction area possible. Additional work

requests may be made by the City for consideration of improved pedestrian walk paths through the construction zone, maintenance of traffic temporary modifications, additional safety barricades, utilization of additional law enforcement officers.

SS Table 4.0 Events Schedule		
Events Schedule		**Frequency**
St. Patrick's Day Parade	2016 date TBD	Annual
Memorial Day Parade	May 25th	Annual
Memorial Tournament	June 1st – June 8th 2015, 2016 TBD	Annual
Independence Day Celebration	July 4th	Annual
Dublin Irish Festival	July 30th- August 2nd , 2016 TBD	Annual
Spooktacular	October 15th 2015, 2016 TBD	Annual
Beggars Night	October 29th 2015, 2016 TBD	Annual
Veterans Day Ceremony	November 11th	Annual

10) TECHNICAL SPECIFICATIONS

a) Pervious Concrete Installation procedures and Inspection

i) General

(2) Scope of Work

(a) The Work described by this guide addresses the labor, materials and equipment necessary for construction of pervious concrete pavement in conformance with the plans, specifications and other contract documents, for Item Special – Permeable Paver Roadway.

(3) References

(a) American Concrete Institute (ACI)

1. ACI 211.3R "Guide for Selecting Proportions for No- Slump Concrete"
2. ACI 305 "Hot Weather Concreting"
3. ACI 306 "Cold Weather Concreting"
4. ACI 522 "Report on Pervious Concrete"
5. ACI 522.1-13 "Specifications for Pervious Concrete Pavement"
6. ACI Flatwork Finisher Certification Program
7. ACI Field Technician Certification Program

(b) American Society for Testing and Materials (ASTM)

1. ASTM C 29 "Test for Bulk Density (Unit Weight) and Voids in Aggregate"
2. ASTM C 33 "Specification for Concrete Aggregates"
3. ASTM C 42 "Test Method for Obtaining and Testing Drilled Cores and Sawed Beams of Concrete"
4. ASTM C 94 "Specification for Ready-Mixed Concrete"
5. ASTM C 117 "Test Method for Material Finer than 75- µm (No. 200) Sieve in Mineral Aggregates by Washing"
6. ASTM C 150 "Specification for Portland Cement"
7. ASTM C 172 "Practice for Sampling Freshly Mixed Concrete"
8. ASTM C 260 "Specification for Air-Entraining Admixtures for Concrete"
9. ASTM C 494 "Specification for Chemical Admixtures for Concrete"
10. ASTM C 595 "Specification for Blended Hydraulic Cements"
11. ASTM C 618 "Specification for Coal Fly Ash and Raw or Calcined Natural Pozzolan for Use as a Mineral Admixture in Portland Cement Concrete"
12. ASTM C 979 "Specification for Pigments for Integrally Colored Concrete"
13. ASTM C 989 "Specification for Ground Granulated Blast-Furnace Slag for Use in Concrete and Mortars"
14. ASTM C 1077 "Practice for Laboratories Testing Concrete and Concrete Aggregates for Use in Construction and Criteria for Laboratory Evaluation."
15. ASTM C 1116 "Specification for Fiber-Reinforced Concrete"
16. ASTM C 1542 " Standard Test Method for Measuring Length of Concrete Cores"
17. ASTM C 1602 "Specification for Mixing Water Used in the Production of Hydraulic Cement Concrete"
18. ASTM C 1602 "Specification for Mixing Water Used in the Production of Hydraulic Cement Concrete"
19. ASTM C 1701 "Test Method for Infiltration Rate of In Place Pervious Concrete"
20. ASTM C 1754 "Standard Test Method for Density and Void Content of Hardened Pervious Concrete"
21. ASTM D 448 "Classification for Sizes of Aggregate for Road and Bridge Construction"

22. ASTM D 1557 "Test Methods for Laboratory Compaction Characteristics of Soil Using Modified Effort (56,000 ft-lbf/ft3)"
23. ASTM D 1751 "Specification for Preformed Expansion Joint Filler for Concrete Paving and Structural Construction (Nonextruding and Resilient Bituminous Types)"
24. ASTM D 1752 "Specification for Preformed Sponge Rubber Cork and Recycled PVC Expansion Joint Fillers for Concrete Paving and Structural Construction"
25. ASTM D 2434 "Test Method for Permeability of Granular Soils (Constant Head)"
26. ASTM D 3385 "Test Method for Infiltration Rate of Soils in Field Using Double-Ring Infiltrometer"
27. ASTM D 5084 "Test Methods for Measurement of Hydraulic Conductivity of Saturated Porous Materials Using a Flexible Wall Permeameter (Falling Head, Method C)"
28. ASTM D 5093 "Test Method for Field Measurement of Infiltration Rate Using a Double-Ring Infiltrometer with a Sealed-Inner Ring"
29. ASTM D 6391 "Test Method for Field Measurement of Hydraulic Conductivity Limits of Porous Materials Using Two Stages of Infiltration from a Borehole"
30. ASTM D7357 "Specification for Cellulose Fibers for Fiber-Reinforced Concrete"
31. ASTM E 329 "Specification for Agencies Engaged in the Testing and/or Inspection of Materials Used in Construction"

(c) National Ready Mixed Concrete Association (NRMCA)
1. NRMCA Pervious Concrete Contractor Certification

(d) State of Ohio Department of Transportation (ODOT) Construction and Material Specifications
1. Item 703.02 Aggregate for Portland Cement Concrete

(4) Quality Assurance
(a) Qualifications of testing laboratories -The testing laboratory shall have its laboratory equipment and procedures inspected at intervals not to exceed 2 years by a qualified national authority as evidence of its competence to perform the required tests and material designs. Acceptable national authority will include the AASHTO Materials

Reference Laboratory (AMRL) or the Cement and Concrete Reference Laboratory (CCRL) as appropriate. In addition, testing machines and equipment must be calibrated annually or more frequently by impartial means using devices of accuracy traceable to the National Bureau of Standards.

Field tests of pervious concrete shall be performed by individuals certified as both an NRMCA Certified Pervious Concrete Technician or equivalent and as an ACI Concrete Field Testing Technician – Grade I. In fields other than those covered by the referenced ASTM standards, the testing laboratory shall accept only those assignments which it is able to perform competently by use of its own personnel and equipment. Any work to be subcontracted must be to laboratories meeting the same criteria.

The testing laboratory shall have demonstrated its competence in the applicable fields for a period of not less than 3 years.

The inspection and testing services of the testing laboratory shall be under the direction of a full-time employee registered as a professional engineer in the State of Ohio. The Engineer shall have a minimum of 5 years of professional engineering experience in inspection and testing of concrete construction.

(5) Special Equipment

Pervious concrete requires specific equipment for compaction and jointing. The pervious concrete pavement shall be jointed and compacted using the methods listed or alternatives as demonstrated and approved by the Architect/Engineer. For example, large installations may warrant mechanized placement techniques.

(a) Rolling compaction shall be achieved using a steel pipe roller or a motorized or hydraulically actuated rotating tube screed that spans the width of the section placed and exerts a vertical pressure of 10 psi (68.95 kPa) to 30 psi (206.85 kPa) on the concrete.

(b) Plate compaction (for small areas) shall be achieved using a standard soil plate compactor that has a base area of at least two square feet

and exerts a minimum of 10 psi (69 kPa) vertical pressure on the pavement surface (through a temporary cover of ¾ in. (19 mm) plywood).

(c) When contraction joints are created in pervious pavements, they may be constructed by rolling, forming or sawing. Rolled joints shall be formed using a "pizza cutter roller" to which a beveled fin with a minimum depth of ¼ the thickness of the slab has been welded around the circumference of a steel roller.

(6) Submittals: Administrative Requirements, for submittal procedures. Prior to commencement of the work, the contractor shall submit the following:

(a) Concrete materials

1. Proposed pervious concrete mixture proportions including all material weights, volumes, design density (unit weight), water-cementitious ratio, and design void content.

2. Aggregate type, source, grading, dry-rodded unit weight, percent passing number 4 sieve and void content.

3. Cement, supplementary cementitious materials, synthetic (polypropylene) or cellulose fibers and chemical admixture manufacturer certifications.

4. Density (unit weight) and void content of proposed freshly mixed pervious concrete mixture per ASTM C 1688. (The fresh density and void content calculated from this procedure will differ from in-place density and void content and is only used to check mixture proportion consistency).

(b) Aggregate base materials: Washed aggregate type, source, grading and void content (percent porosity).

(c) Qualifications: Evidence of qualifications listed under Quality Assurance in Section 1.03 of this guide.

(d) Project details: Specific plans including a jointing plan, details, schedule, construction procedures and quality control plan.

(e) Subcontractors: List all materials suppliers, subcontractors and testing laboratories to be used on the project.

(7) Test Panels

Prior to construction, a test panel shall be placed with the crew meeting the requirement of NRMCA certified personnel per section 1.03 C. and approved by the Architect/Engineer. The Architect/Engineer may waive this requirement based on Contractor qualifications. At Contractor's option, test panels may be constructed on approved sections of project aggregate detention (or groundwater recharge) layer.

(a) Test panel(s) shall be constructed in accordance with the plans and specifications. Regardless of qualification, the contractor is to place one test panel, consisting of approximately 225 ft^2 (20.9 m^2) at the required project thickness, consolidated, jointed and cured using materials, equipment, and personnel proposed for the project, and on the same aggregate base proposed, to demonstrate to the Architect/Engineer's satisfaction that in-place unit weights can be achieved and a satisfactory pavement can be installed at the site location. If strength is used in the pavement design, cores from the test panels may be used to confirm that consolidation and infiltration, as well as strength, is consistent with design objectives for the top and bottom of the slab.

(b) Test panel(s) cost and removal, if necessary, shall be included as a line item in the contract proposal and contract. Test panels may be placed at any of the specified pervious concrete pavement locations on the project or at another test site.

(c) Quality: Test panels shall have acceptable surface finish, joint details, thickness, porosity and curing procedures and shall comply with the testing and acceptance standards listed in the Quality Control section of this specification. Test density and void content of fresh concrete for the test panels in accordance with ASTM C 1688. Obtain hardened concrete cores from the test panels in accordance with ASTM C 42:

test core thickness in accordance with ASTM C 1542, and density (unit weight) and void content in accordance with ASTM C 1754.

(d) Satisfactory performance of the test panels shall be determined by:

1. Fresh concrete results
   a. Density (unit weight) plus or minus 5 lb/ft^3 (80 kg/m^3) of the submitted fresh density (unit weight).

2. Hardened concrete results (average of minimum 3 cores)
   a. Compacted thickness no less than ¼ in. (6.35 mm) less than specified thickness ($T_{compacted} \geq T_{specified} - ¼$ in.); ($T_{compacted} \geq T_{specified} - 6.35$ mm)
   b. Hardened density (unit weight) plus or minus 5% of the design density (unit weight).

(e) If test panels are found to be unsatisfactory, they shall be removed at the Contractor's expense and disposed of in an approved landfill or recycling facility. If test panels are found to be satisfactory, they may be left in-place and included in the completed work, at no additional cost to the project.

(8) Project Conditions

(a) Weather Limitations

1. The Contractor shall not place pervious concrete for pavement when the ambient temperature is predicted by the National Weather Service Point Forecast for the jobsite to be 40 °F (4 °C) or lower during the seven days following placement, unless otherwise permitted in writing by the Architect/Engineer.

2. The contractor shall not place pervious concrete for pavement when the ambient temperature is predicted by the National Weather Service Point Forecast for the jobsite to rise above 90 ºF (32 °C) during the seven days following placement, unless otherwise permitted in writing by the Architect/Engineer.

3. Pervious concrete pavement shall not be placed on frozen coarse aggregate or subgrade.

4. Evaporation control measures shall be applied from the time of discharge until the pavement is covered with polyethylene sheeting to prevent moisture loss during placement operations (refer to section 2.09).

(9) Pre-paving Conference

A pre-paving conference with the Architect/Engineer shall be held within one week prior to beginning placing the pervious concrete. The contractor shall have the pervious concrete supplier, the foreman and the entire concrete crew that will form and place the concrete in attendance at this meeting. A qualified representative from ORMCA/Ohio Concrete shall also be in attendance for assistance.

As a guide for the meeting, the document Checklist for the Concrete Pre-Construction Conference (available from the National Ready Mixed Concrete Association or the American Society of Concrete Contractors) shall be used to review all requirements of the contract during the meeting. Meeting emphasis shall be on how paving with pervious concrete differs from paving with conventional concrete.

ii) Products

(1) Curing Materials

(a) Polyethylene sheeting - The primary method of curing pervious concrete shall be the placement of a waterproof covering, consisting of a minimum of 4 mil thick clear polyethylene sheeting.

(b) Other moisture loss control - For prevention of moisture loss prior to the primary method of curing:

1. Monomolecular film (evaporation retardant), SikaFilm by Sika Corporation, EucoBar by Euclid Chemical Co., Confilm by BASF (Master Builders Technologies) or Catexol Cimfilm by Axim Concrete Technologies, or approved equal, applied per manufacturer's instructions.

2. Soybean oil sealer. Note: Soybean oil is gaining recommended for added protection. It reportedly reduces surface color markings from plastic sheeting, may enhance strength and does not reduce

porosity.

3. Fogging equipment designed to raise the relative humidity of the ambient air over the slab and reduce evaporation to include fog nozzles that atomize water using air pressure to create a fog blanket over the slab. Note: garden hose nozzles are not sufficient to create fog and may wash paste off the aggregate.

(2) Cement: Portland cement Type I, Type II or V conforming to ASTM C 150 or Portland cement Type IP or IS conforming to ASTM C 595.

(3) Supplementary Cementitious Materials:
   (a) Fly ash conforming to ASTM C 618
   (b) Ground Granulated Blast-Furnace Slag conforming to ASTM C 989

(4) Admixtures
   (a) Air entraining admixtures with ASTM C 260.
   (b) Chemical admixtures shall comply with ASTM C 494.
      1. Mid-range water reducing admixtures (water reducers) Type A or High Range water reducing admixtures Type F or G are permitted due to low water-cementitious ratios specified for pervious concrete.

      2. Extended set control admixtures (hydration stabilizers) meeting requirements of ASTM C 494 Type B Retarding or Type D Water Reducing/Retarding admixtures are recommended to increase concrete placement time or to improve finishing operations. Note: this stabilizer suspends cement hydration by forming a protective barrier around the cementitious particles, which delays the particles initial set. If this mix heats up in the truck a standard retarder will not prevent premature hydration where the stabilizer will.

      3. Viscosity modifying admixtures (VMA's) are permitted to facilitate discharge of the concrete from the truck and placement in the forms.

(5) Fiber Reinforcement

(a) Synthetic fiber shall be in accordance to ASTM C 1116 Type III made of polypropylene.

(b) Cellulose fibers shall be in accordance to ASTM C 1116 Type IV made of natural fibers conforming to ASTM D 7357.

(c) Macrosynthetic fibers are gaining acceptance and use in certain areas

(6) Aggregates for Pervious Concrete

(a) Coarse aggregate shall meet the size and grading requirements as defined in ASTM D 448 (or Standard Sizes of Coarse Aggregate, Table 4, AASHTO Specifications, Part I, 13th Ed., 1982 or later) and shall comply with ASTM C 33 and ODOT Item 703.02. Use No.67, No. 7, No. 8, No. 89 or No. 9 unless an alternate size is approved for use based on meeting the project requirements. Data for proposed alternate material shall be submitted for approval per Section 1.05A of this guide. Fine aggregate complying with ASTM C33, if used, shall not exceed 3 ft^3 per yd^3 (0.11 m^3 per 1.0 m^3).

(b) Larger aggregate sizes may increase porosity but can decrease workability. No. 8 (3/8 in. or 9.5 mm) size coarse aggregate is the common size used in pervious concrete pavements. Well graded aggregates shall be avoided as they may reduce porosity, and may not provide adequate void content.
<u>Note</u>: Suggested maximum limit when using a number 8 coarse aggregate pervious mix is 15% passing No. 4 sieve (4.75 mm)

1. For 5 to 10% passing No. 4 sieve (4.75 mm), add 125 lb/yd^3 (74 kg/m^3) fine aggregate

2. For 0 to 5% passing No. 4 sieve (4.75 mm), add 200 lb/yd^3 (119 kg/m^3) fine aggregate

(7) Water: Water shall be potable and comply with ASTM C 1602.

(8) Mixture Proportions: The Contractor shall furnish a proposed mix design with all proportions of materials prior to commencement of work. The data shall include densities (unit weights) and void contents determined in

accordance with ASTM C 1688 for fresh mixed properties and with ASTM C 1754 for hardened concrete properties of the same proposed mixture. The composition of the proposed concrete mixture shall be submitted to the Architect/Engineer for review and/or approval and shall comply with the following provisions unless an alternative composition is demonstrated to comply with the project requirements. Mixture performance will be affected by properties of the particular materials used. Trial mixtures must be tested to establish proper proportions and determine expected behavior. Concrete producers may have mixture proportions for pervious concrete optimized for performance with local materials by use of available software programs. Appendix 6 of ACI 211.3R provides a guide for pervious concrete mixture proportioning. General mixture proportions are as follows:

(a) Aggregate/cementitious ratio: range of 4:1 to 5:1.

(b) Concrete mixture unit weight: range of 115 lb/ft^3 to 135 lb/ft^3 (1840 kg/m^3 to 2080 kg/m^3)

(c) Concrete mixture void content: range of 13% to 30%.

(d) Cementitious content: range of 450 lbs/yd^3 to 600 lb/yd^3 (267 kg/m^3 to 356 kg/m^3), total cementitious content.

(e) Supplementary cementitious content: Fly ash: 25% maximum; Slag: 25% maximum, or Combined supplementary cementitious content: 35% maximum.

(f) Water - cementitious ratio: range from 0.28 to 0.35.

(g) Fiber reinforcement is recommended for added performance:
   1. Synthetic polypropylene, target 0.1% volume of mixture or range 1 lb/yd^3 to 1.5 lb/yd^3 (0.593 kg/m^3 to 0.890 kg/m^3)

   2. Cellulose, range 1.5 lb/yd^3 to 3 lb/yd^3 (0.890 kg/m^3 to 1.78 kg/m^3)

   3. Macrosythetic fibers, range per manufacture's recommendation.

(h) Aggregate content: The bulk volume of aggregate per cubic yard (cubic meter) shall be 27 ft^3 (1 m^3) when calculated from the dry rodded density (unit weight) determined in accordance with ASTM C29 jigging or rodding procedure.

(i) Admixtures: Admixtures shall be used in accordance with the manufacturer's instructions and recommendations. Dosage of air-entraining admixture shall be a minimum of 2 oz /cwt (130 mL/100kg) of cementitious material.

(j) Mix Water: The quantity of mixing water shall be established to produce a pervious concrete mixture of the desirable workability to facilitate placing, compaction and finishing to the desired surface characteristics. Note: Mix water shall be such that the cement paste displays a wet metallic sheen without causing the paste to flow from the aggregate. (A cement paste with a dull-dry appearance has insufficient mix water for hydration.) Insufficient mix water results in inconsistency in the mix and poor bond strength. Jobsite addition of mix water is permitted to adjust for dry mixtures in concrete transit mixers. Note: High water content results in the paste sealing the void system primarily at the bottom and poor surface bond.

ii) Execution

The Architect/Engineer shall be notified at least 24 hours prior to pervious concrete paving work. Careful consideration for the construction sequence is prudent and, to the greatest extent possible, the surrounding earthwork/landscape operations should be completed and stabilized prior to stormwater storage and pervious concrete placements.

(1) Installation

(a) Pervious Concrete Pavement

1. Pavement Thickness:

Pavement thickness for all applications (excluding heavy traffic loads) shall be single-course placement 8 in. (203 mm) thick unless otherwise specified in the plans. Pavements for vehicles heavier than single axle service/delivery trucks will require special design thicknesses which may require two-course construction.

Note: Thicknesses greater than 6 in. (152 mm) have been successfully installed with single-course construction, and design has been verified with cores. Cores from a test slab may be used to confirm that consolidation and infiltration in the bottom of the slab is consistent with design objectives. Cores may also be used to determine relative compressive and flexural strengths.

2. Formwork:
   a. Form materials are permitted to be of wood or steel and shall be the full depth of the pavement. Caution: protect impermeable membranes from puncture or tear when placing forms and form pins. Forms shall be of sufficient strength and stability to support mechanical equipment without deformation of plan profiles following spreading, strike-off and compaction operations. Forms may have a removable spacer of ½ in. to ¾ in. (13 mm to 19 mm) thickness placed above the depth of pavement. The spacers shall be removed following placement and vibratory strike-off to allow roller compaction. (Removable spacers may not be necessary if other means of strike-off and consolidation are used, such as a hydraulically actuated pipe roller screed.)

   b. The Contractor will be restricted to pavement placement widths of a maximum of 20 ft (6.1m) [Note: Parking stall area is typically 19 feet (5.8 m) wide.], unless the Contractor can demonstrate competence to provide pavement placement widths greater than the maximum specified to the satisfaction of the Architect/Engineer. Large scale mechanized placement of pervious concrete with slipform concrete paving machines, laser screeds or asphalt paving machines may preclude use of fixed forms.

3. Mixing and Hauling:
   a. Production: Pervious concrete shall be manufactured and delivered in accordance with ASTM C 94.

   b. Mixing: Mixtures shall be produced in central mixers or in transit (truck) mixers. When concrete is delivered in agitating or

non-agitating units, the concrete shall be mixed in the central mixer for a minimum of 1.0 minute or until a homogenous mix is achieved. Concrete mixed in transit mixers shall be mixed at the speed designated as mixing speed by the manufacturer for 75 – 100 revolutions.

c. Transportation: The pervious concrete mixture may be transported or mixed on site and discharge of individual loads shall be completed within one (1) hour of the introduction of mix water to the cement. Delivery times may be extended to 90 minutes when a hydration stabilizer is used.

d. Discharge: Each truckload shall be visually inspected for consistency of concrete mixture. Water addition shall be permitted at the point of discharge to obtain the required mix consistency, provided a measurable quantity is discharged, and provided no more than half of the batch amount has been discharged. A minimum of 30 revolutions at the manufacturer's designated mixing speed shall be counted following the addition of any water to the mix, prior to further discharge. Discharge shall be a continuous operation and shall be completed as quickly as possible. Concrete shall be deposited as close to its final position as practical and such that discharged concrete is incorporated into previously placed plastic concrete. If consolidation occurs during concrete discharge, placement shall be halted and wet concrete removed (this may happen towards the end of some loads).

4. Placing and Finishing:
   a. Prior to placing concrete, the surface of the aggregate detention layer (or recharge bed) shall be soaked and in a wet condition at time of placement. Failure to moisten the aggregate surface will result in a reduction in strength of the pavement.

   b. Concrete may be deposited into the forms by mixer truck chute, conveyor or buggy.

c. Unless otherwise permitted, the Contractor shall utilize a mechanical vibratory screed to strike off the concrete ½ in. to ¾ in. (13 mm to 19 mm) above final height, utilizing the form spacers described in Formwork. An alternative method to strike off and compact the concrete is to use a hydraulically actuated pipe roller screed as described under 1.04 Special Equipment. If approved by the Architect/Engineer in writing, the Contractor may place the pervious concrete with either slip form or vibratory form riding equipment with a following compactive unit that will provide a minimum of 10 psi (69 kPa) vertical force to the concrete. Similarly, strike off by hand straightedge may be permitted for sidewalks and other small areas followed by compaction.

d. Care must be taken to prevent closing the void structure of pervious concrete. After mechanical or other approved strike-off and compaction operation, no other finishing operation will be allowed. Internal vibration shall not be permitted. If vibration, internal or surface applied, is used, it shall be shut off immediately when forward progress is halted for any reason.

e. Placed concrete shall not be disturbed while in the plastic state. Low spots after the screeding operation shall be over-filled for surface repair and either tamped to desired elevation with hand tampers or passing the screed a second time to correct the elevation.

f. Following strike-off, remove spacers and compact the concrete to the form level, utilizing a steel roller, a plate compactor on plywood or other method approved by the Architect/Engineer. Longitudinal rolling shall be followed immediately by cross rolling and joint rolling (if specified). Care shall be taken during compaction that sufficient compactive force is achieved without excessively working the concrete surface that might result in sealing off the surface porosity. Rollers may require cleaning and treatment to prevent aggregate pick-up during rolling operations.

g. Hand tampers and an edging tool with ¼ in. (6 mm) radius shall be used to compact the concrete along the slab edges immediately adjacent to the forms. After compaction, inspection and surface repair, no further finishing shall be performed on the concrete. Surface curing shall begin immediately.

h. The pervious concrete pavement shall be compacted to the required cross-section and shall not deviate more than +/- 3/8 in. in 10 ft (+/- 9 mm in 3 m) from profile grade.

5. Jointing
   a. Joints in pervious pavements can be precluded at the option of the owner, who may, instead, choose to accept or prefer the appearance of random cracking.

   b. Although longer joint spacings may control cracking, for conservative design, contraction (control) joints shall be installed at regular intervals not to exceed 20 ft (6.1 m), and slab length shall not exceed 1.25 times the width of the slab. Transverse contraction joints shall be installed at ¼ the depth of the thickness of the pavement. These joints can be installed in the plastic concrete or saw cut after the concrete has hardened; in either case, careful attention is necessary to prevent raveling.

   c. Jointing plastic concrete: Joints installed in the plastic concrete may be constructed utilizing a small rolling groover as described in the Special Equipment section of this guide specification. When this option is used it shall be performed immediately after roller compaction with one single pass and prior to curing. Note: Improper use of the rolling groover may cause "de-consolidation" of material within a 2-in. band along either side of the groove joint, and result in raveling under traffic. Rollers may require cleaning and treatment to prevent aggregate pick-up during rolling operations.

d. Jointing hardened concrete: Saw-cuts shall be made as soon as the pavement has hardened sufficiently to prevent raveling and uncontrolled cracking. [Note: jointing of hardened concrete has successfully occurred after the seven day minimum curing period with minimal to no uncontrolled cracks.] Early entry sawing occurs later with pervious concrete than with conventional concrete. For either method, the curing cover shall be temporarily removed and the surface kept misted to prevent moisture loss during sawing. Sawdust or slurry shall be promptly removed to protect the pervious concrete pores. After sawing, the curing cover shall be securely replaced for the remainder of the curing cycle.

e. Transverse construction joints: Transverse construction joints shall be installed whenever placing is suspended for 30 minutes or whenever concrete is no longer workable.

f. Isolation joints: Isolation joints shall be used when abutting fixed vertical structures such as light pole bases, building foundations, etc.

g. Edging, using a tool with ¼ in. (6 mm) radius, and additional compaction with hand tamping tools shall be performed along all form lines and along all isolation joints and construction joints to reduce potential for raveling under traffic.

6. Curing:
   a. Curing procedures shall begin immediately, no later than 10 minutes, from the time the pervious concrete is discharged from the truck. Placing, finishing and tooled jointing and edging must be completed within the 10-minute window from discharge. The pavement surface shall be covered with a minimum of 6 mil thick clear polyethylene sheet or other approved covering material. Prior to covering, an evaporative reducer shall be sprayed above the surface when required due to ambient conditions (high temperature, high wind, and low humidity). The cover shall overlap all exposed edges and shall be secured (without using dirt or stone) to prevent dislocation due to winds

or adjacent traffic conditions. For additional guidance on hot weather concreting, see ACI 305, and for cold weather concreting see ACI 306.

b. Immediately after screeding, the surface shall be kept moist and evaporation prevented using a spray applied curing compound and/or evaporation retarder immediately after screeding. Note: The low water/cementitious ratio and high amount of exposed surface of pervious concrete makes it especially susceptible to drying out. Immediately after each transverse jointing the polyethylene sheet curing shall be applied then cross rolling shall be performed.

c. The curing cover shall remain securely in place for a minimum of 7 days, uninterrupted. No vehicular traffic shall be permitted on the pavement until curing is complete (7 days) and no truck traffic shall be permitted for at least 14 days. Pedestrian traffic may be permitted on the curing concrete after 24 hours. The Architect/Engineer may permit earlier traffic opening times.

7. Sealing –When pervious concrete is produced with an integral color pigment, a UV resistant, non- yellowing acrylic based sealer per ASTM C 309 shall be lightly broadcast onto the cured pavement surface to brighten and highlight the color pigment without clogging the surface pores of the pervious matrix and disrupting its permeability. Some surface preparation may have to be conducted to prepare the sealer. Subsequent applications of the sealer shall be a part of the maintenance plan and not included in this contract.

8. Quality Control - Concrete:
   a. The Architect/Engineer shall employ a testing laboratory that conforms to the requirements of ASTM E329 and ASTM C1077. All personnel engaged in concrete testing shall be certified by the American Concrete Institute as ACI Concrete Field Technicians or equivalent.

   b. Traditional concrete testing procedures for strength and slump control are not applicable to this type of pavement material.

Procedures to be used per this guide specification include: ASTM C 172, ASTM C 29, ASTM C 42, ASTM C 1688, and ASTM C 1754.

c. Concrete tests shall be performed for each 50 yd^3 (38 m^3) or fraction thereof with a minimum of one set of tests for each day's placement.

d. Sampling - Plastic concrete shall be sampled in accordance with ASTM C 172.

e. Density (unit weight) – Density (unit weight) of the plastic concrete shall be measured in accordance with ASTM C 1688. The density (unit weight) of the delivered concrete shall be+/- 5 lb/ft^3 (80 kg/m^3) of the submitted fresh density (unit weight).

f. Void content - Void content of the plastic concrete shall be calculated as per ASTM C 1688 and compared to the submitted fresh void content. Unless otherwise specified, void content shall be between 13% and 30%. After a minimum of seven (7) days, hardened concrete shall be tested at a rate of one set of three cores per 50 yd^3 (38 m^3) of concrete placed on one day or fraction thereof. Cores shall be drilled in accordance with ASTM C 42. The cores shall be measured for thickness, void structure and unit weight. Cores shall be taken at minimum 2 ft (0.6 m) away from the edge of placement to ensure a representative sample.

g. Thickness – Untrimmed hardened core samples shall be used to determine placement thickness. The average of all production cores when measured for length shall not be more than ½ in. (13 mm) less than the specified design thickness.

h. Core density (unit weight) and void content - The cores shall be tested for average density (unit weight) and void content using ASTM C 140. Density (unit weight) of cores trimmed and tested in the saturated condition, per ASTM C 1754 shall be +/- 5% of the design unit weight or approved hardened density from the

test panels.

9. Basis of Payment
   Pervious concrete pavement shall be paid for based on the square yards or square feet (square meters) of in-place product including materials and labor, thickness, and void content.

10. Performance and Inspection/Maintenance
    Excessive raveling – At or before 28 days after placement, any areas of excessive surface raveling, as determined by the Architect/Engineer, shall be removed and replaced or repaired by the Contractor, [optional language – a) at the unit price established in the contract; or b) at no additional cost to the project].

    Surface drainage – At or before 28 days after placement either the average infiltration rate of multiple locations or the infiltration rate of a determined localized area of the in-place pervious concrete shall be determined per ASTM C 1701. Any areas of insufficient surface porosity, as determined by the Architect/Engineer, shall be removed and replaced by the Contractor, at no additional cost to the project.

FIELD PHOTO DOCUMENTATION

A. Scope of Services. Provide comprehensive documentation of pre-construction, on-going construction, and final as-built conditions. This includes electronic indexing, navigation, storage and remote access to the documentation throughout the duration of the Project. Indexing and navigation system will utilize actual AUTOCAD construction drawings, making such drawings interactive through on an on-line interface. For all documentation referenced herein, indexing and navigation must be organized by both time (date-stamped) and location throughout the duration of the Project. Documentation will combine indexing and navigation system with inspection-grade digital photography designed to capture actual conditions throughout construction. Documentation for on-going construction activities will be on a week to week basis and at critical milestones. Documentation for site conditions will be on a month to month basis. Documentation will be accessible on-line through use of an internet connection. Documentation will allow for multiple-user access, simultaneously, on-line. Access shall

be secure and accomplished through individual passwords. On-line access will be provided throughout the duration of the Project.

Pre-construction conditions will be documented prior to any earth disturbing activities. Indexing and navigations shall be accomplished through interactive site plans. Photographs shall be taken in sharp focus to clearly show the pre-construction conditions. Vantage points for photographs shall be coordinated with the Department. Digital Images shall be provided in an uncompressed TIFF format, produced by a digital camera with a minimum sensor size of 6.0 megapixels and at an image resolution of not less than 1024 by 768 pixels. Coordination of the photo shoot is included and is accomplished through a designated representative on-site at the Project, typically a Superintendent or Engineer. Photo Documentation Contractor may also attend monthly construction progress meetings, as necessary. The Photo Documentation Contractor will provide regular updates regarding the status of the documentation, including photo shoots completed. These updates will be coordinated with the accepted Contractor's baseline project schedule. All on-line domain/web hosting, security measures and redundant server back-up of the documentation are furnished as part of this contract. Technical support related to using the system or service is furnished as part of this contract.

Four final copies (Permanent Record) of the indexing and navigation system with all digital photographs embedded and active will be provided in an electronic media format, typically a DVD or external hard-drive. A complete set of digital images shall be submitted as well. On-line access terminates upon issuance of substantial completion by the Department and delivery of the Permanent Record.

B. Ownership of Documents. Specifications, drawings, personal information, or other information given to the Photo Documentation Contractor by the Department is disclosed in confidence. They shall not be reproduced, copied, disclosed, or used except in connection with the services which are the subject of this scope.

C. Site Visits/Observation. The Photo Documentation Contractor shall visit the project and/or construction site at appropriate intervals and take photos of the construction progress. Visits to the project site and observations made by the Photo Documentation Contractor as part of services provided during construction under this scope shall not make the Photo Documentation Contractor responsible for monitoring of the work. Photo Documentation Contractor employees will report to the site office prior

to working on site. The Superintendent shall be the designated person granting permission onto the site in order to ensure safe access for Photo Documentation Contractor employees.

D. Payment. Payment associated with this scope of work shall be made under applicable pay items identified in Part 1 of this contract.

The Contractor shall be paid for this work under the following pay items in MISCELLANEOUS in the General Summary:

ITEM SPEC PRE-CONSTRUCTION PHOTO DOCUMENTATION
ITEM SPEC WEBCAM SERVICES
ITEM SPEC UNDERGROUND ELECTRIC SERVICE FOR ONE WEBCAM
ITEM SPEC UTILITY POLE INSTALLED & REMOVED FOR WEBCAM

Two webcams will be placed on this project.

ITEM 410 - TRAFFIC COMPACTED SURFACE

The Contractor shall utilize PAY ITEM 410 TRAFFIC COMPACTED SURFACE as directed.

GEOTECHNICAL INFORMATION

The subsurface exploration report for this project is included in the bid documents. Dublin does not guarantee that the conditions outlined in the report are the conditions of this project.

6570 RIVERSIDE DRIVE STRUCTURE DEMOLITION

The City has completed an environmental survey in conjunction with the complete demolition of all structures at this property. The environmental survey has indicated that no asbestos remediation is anticipated on this project.

TEST HOLES

The Contractor is encouraged to dig test holes at the project site prior to making their bid to familiarize themselves with site subsurface conditions. The bidder shall take into account any difficulty they perceive in constructing the project due to rock, ground water, weak soils, topsoil, etc.

ROCK EXCAVATION

Rock will be encountered throughout this project. Payment shall be made under applicable pay items where rock would be encountered when excavation is required to perform the work. No additional payment shall be made for rock excavation.

The Plan & Profile sheets for SR 161 / Riverside Drive Roundabout (Part 1) reflect that rock was encountered between 772.9 feet and 816.8 feet. The elevations are included as information only and are from the geotechnical report. The City does not guarantee that the geotechnical report and elevations of encountered rock will be the only elevations at which rock will be encountered.

The Plan & Profile sheets for Riverside Drive Realignment (Part 2) show approximate location of "Top of Bedrock". The "Approximate Bedrock or Top of Bedrock" is a representation only.

All excavation shall be considered as unclassified, including rock.

CONSTRUCTION MATERIALS

No alternates or deviations shall be permitted from those construction materials shown on the plans. Bidders shall not submit alternates with their bid unless an alternate is explicitly requested.

CONSTRUCTION LAYOUT

All construction layout stakes for this project shall be provided by the Contractor. All work shall be performed by and under the guidance of an Ohio Professional Surveyor.

DEWATERING

The cost of any dewatering operations required for the construction of the sanitary sewers, storm sewers, water mains, culverts, AEP, Dublin & AT&T duct systems and vaults, and/or conduits shall be included in the price bid for the various items.

CONDUIT END TREATMENT

Immediately after placement of any conduits, the Contractor shall construct the end treatments required by the plans at both the outlet and inlet ends. This shall include headwalls, flared-end sections, rip-rap, rock channel protection, seeding, etc.

MANHOLES, CATCH BASINS AND INLETS

The contractor will make all final grade adjustments of manhole, catch basin and inlet covers and frame assemblies using injection molded high density polyethylene (HDPE) adjustment rings where practical. These adjustment rings shall be manufactured from polyethylene plastic as identified in ASTM Designation D-1248 (Standard Specification for Polyethylene Plastic Molding and Extrusion Materials). Installation shall be per manufacture's recommendations only. The annular space between the rings and cone basin, the rings, and the rings and cover frame shall be sealed utilizing an approved butyl sealant.

SURVEY MONUMENTATION

The contractor shall carefully preserve bench marks, property corners, reference points, stakes and other survey reference monuments or markers. In cases of willful or careless destruction, the contractor shall be responsible. Resetting of markers shall be performed by an Ohio Professional Surveyor as approved by the City Engineer at the contractor's expense.

ITEM SPECIAL – EXPANSION MATERIAL

Full depth expansion material one half (1/2) inches thick conforming to ASTM D 1752, Type 1 (recycled rubber expansion material) shall be utilized where new work meets existing walk, curbs or structures. Fibrous type expansion material is not to be used.

PLANS

There are three (3) sets of plans associated with this contract.

SR 161 / Riverside Drive Roundabout (Part 1) 13-014-CIP

Riverside Drive Realignment (Part 2) 13-015-CIP

Proposed Sanitary Sewer for Riverside Drive Realignment (Part 2) 14-012-CIP

The bid schedule for Part 2, includes the Proposed Sanitary Sewer items.

E. GEOTECHNICAL REPORTS

SUBSURFACE INVESTIGATION
DUBLIN BRIDGE STREET CIVIC CORE PROJECT
SR 161 & RIVERSIDE DRIVE INTERSECTION IMPROVEMENTS
DUBLIN, FRANKLIN COUNTY, OHIO

S&ME Project No. 1117-14-012A/B

Report to:

American Structurepoint, Inc.
Columbus, Ohio

Prepared by:

S&ME

6190 Enterprise Ct.
Dublin, Ohio 43016

December 2014

December 12, 2014
1117-14-012A/B

American Structurepoint, Inc.
2550 Corporate Exchange Drive
Columbus, OH 43231

Attention: Mr. Frank J. Aransky, P.E.

Reference: **Subsurface Investigation**
Dublin Bridge Street Civic Core Project
SR 161 & Riverside Drive Intersection Improvements
Dublin, Franklin County, Ohio

Dear Mr. Aransky:

In accordance with our revised proposal dated February 6, 2014, which was authorized by American Structurepoint, Inc. (ASP) Task Order No. 1 for 200700175,on July 30, 2014, and our revised Modification of Scope and Fee request dated October 17, 2014, which was authorized on October 21, 2014, by ASP, S&ME, Inc. (S&ME) has completed the Subsurface Investigation for the State Route 161 and Riverside Drive Intersection Improvements project in Dublin, Ohio. This report contains the information obtained from the borings, pavement subgrade evaluation for design and construction of the roadway, and recommendations for the proposed retaining walls.

We appreciate having been given the opportunity to be of service. Please do not hesitate to contact our office if you have any questions concerning our report.

Respectfully submitted,

S&ME, Inc.
Dublin, Ohio

STATE OF OHIO
CHRISTOPHER J. NYE
E-77034
12-12-14
REGISTERED PROFESSIONAL ENGINEER

Christopher J. Nye, P.E.
Project Engineer

Bethanie L. Meek, P.E.
Senior Reviewer

Submitted: Electronic copy to FAransky@structurepoint.com

TABLE OF CONTENTS

1. EXECUTIVE SUMMARY 3
2. INTRODUCTION 4
3. SITE AND PROJECT DESCRIPTION 4
4. REGIONAL GEOLOGY 5
5. EXPLORATION 6
5.1 Field Investigation 6
5.2 Laboratory Testing 7
5.2.1 Results of Soil Classification Testing 7
5.2.2 Results of Moisture Testing 7
6. FINDINGS 7
6.1 Existing Pavement 8
6.2 General Subsurface Stratigraphy 8
6.3 Groundwater Observations 9
7. ANALYSES AND RECOMMENDATIONS 9
7.1 Pavement Subgrades 9
7.1.1 Subgrade Support Parameters 9
7.1.2 Unsuitable Subgrade Materials 10
7.1.3 ODOT GB1 Subgrade Analysis 11
7.1.4 Subgrade Remediation 12
7.2 Roadway Embankment Construction 12
7.2.1 Embankment Foundation/Subgrade Preparation 13
7.2.2 “Fill” Areas 13
7.2.3 “At-Grade” and “Cut” Areas 14
7.2.4 Borrow Soil and Backfill Compaction Recommendations 15
7.2.5 Yielding Subgrade 15
7.3 Retaining Wall Foundation Recommendations 16
7.3.1 Shallow Foundation Bearing Resistance 17
7.3.2 Eccentricity (Overturning) 19
7.3.3 Sliding Resistance 19
7.3.4 Drilled Shaft – Lateral Load Resistance 20
7.3.5 Drilled Shaft Construction Recommendations 21
7.3.6 Global Stability 22
7.4 Lateral Earth Pressures 22
7.5 Groundwater Considerations 24
8. FINAL CONSIDERATIONS 24

APPENDIX A

Plate No.
Vicinity Map 1
Plan of Borings 2
Explanation of Symbols and Terms Used on Boring Logs for Soil and Rock 3-4
Boring Logs 5-11
Summary of Laboratory Test Results 12
Atterberg Limits' Results 13
Gradation Curves 14-19
Unconfined Compression Test Results…… 20-21
Rock Core Photographs…. 22

APPENDIX B

Selected Boring Logs from Previous Subsurface Investigation

APPENDIX C

ODOT GB1 Table

APPENDIX D

Lateral Load Analysis

APPENDIX E

Schematic Plan (Prepared by American Structurepoint)

1. EXECUTIVE SUMMARY

This summary is presented for the convenience of the reader. However, the full report text should be studied and understood before preparing any estimation of quantities or designs based on this summary.

Based on the information provided by American Structurepoint, Inc. (ASP) S&ME understands that the project consists of construction of a new roundabout at the intersection of SR 161 and Riverside Drive in Dublin, Ohio, realignment of Riverside Drive between SR 161 and Dale Drive, and installation of new shared use paths around the proposed roundabout, including a connector from the roundabout south to Martin Road. The project also includes construction of four (4) retaining walls and a pedestrian staircase.

A total of seven (7) borings were performed to investigate the existing soils at the proposed site. S&ME previously performed a Subsurface Investigation for the planned intersection improvements and submitted our results in an engineering report dated October 15, 2013.

The following recommendations are discussed in detail in the report:

- Using the ODOT Geotechnical Bulletin 1 (GB1) spreadsheet (Ver. 12.00), the average California Bearing Ratio (CBR) computed for the anticipated subgrade soils encountered during this investigation is 7%.

- Based on the ODOT GB1 subgrade analysis, global remediation/stabilization of is not recommended for the project. Excavate/replace subgrade remediation is recommended for portions of this project, as described in Section 7.1.4.

- Final bearing elevations were not available at the time of this report for the planned retaining walls. However, based on preliminary information from ASP and the subsurface conditions encountered in the borings, foundations for Walls 1, 2, and 3 are expected to consist of shallow foundations bearing on limestone bedrock for Wall 1, and either existing loose to medium-dense sand and gravel fill or medium hard to hard limestone bedrock for Walls 2 and 3. Shallow foundation bearing capacity recommendations are provided in Section 7.3.1.

- S&ME understands that Wall 4 will consist of predrilled holes into bedrock with H-piles and lagging, and analyzed the response of the shafts to the horizontal and moment loading provided by ASP. Based on lateral load analysis results for a HP12x74 pile with a minimum 24-inch diameter shaft, S&ME recommends a bedrock socket for these drilled shafts of 7 feet below El. 798, or a minimum tip elevation of El. 791. Analysis results are discussed in Section 7.3.4.

- Global stability analyses performed on the proposed retaining walls indicates that the minimum Factor of Safety with respect to global stability for is anticipated to be no less than 1.3.

- Based on observations made during the field work, it is not anticipated that significant quantities of groundwater will be encountered during construction activities, and the quantities of groundwater encountered are anticipated to be controllable by bailing or pumping from temporary sumps. Groundwater was encountered in Boring B-307 at a depth of 5 feet (near El. 774).

2. INTRODUCTION

S&ME, Inc. (S&ME) has completed the subsurface investigation for the planned roadway improvements at the State Route 161 and Riverside Drive intersection as a part of the Dublin Bridge Street Civic Core Project in Dublin, Franklin County, Ohio. The work was performed in general accordance with our revised proposal dated February 6, 2014, and our revised Modification of Scope and Fee request dated October 17, 2014. The purpose of this investigation was to obtain subsurface information to allow us to characterize the subsurface conditions, evaluate pavement subgrade conditions for pavement design to be performed by others, and provide recommendations for the proposed retaining walls. This report describes our understanding of the project, presents the results of the field exploration and laboratory testing, and discusses our conclusions and recommendations.

As requested by ASP, this investigation was not performed in strict accordance with ODOT's Specifications for Geotechnical Explorations (SGE). S&ME understands that the project documents will reference ODOT specifications for roadway construction; therefore, we have included reference to ODOT Construction and Materials Specifications (CMS) in our report.

3. SITE AND PROJECT DESCRIPTION

Based on the Survey Scope Exhibit provided by ASP on January 9, 2014, S&ME understands that the project will include:

- Construction of a new roundabout at the intersection of SR 161 and Riverside Drive. The new roundabout will be located approximately 125 feet to the east of the existing intersection;
- Realignment of Riverside Drive between SR 161 and Dale Drive approximately 150 feet to the east; and
- Installation of new shared use paths around the proposed roundabout, including a connector from the roundabout south to Martin Road.

The original plans also included a total of three (3) new retaining walls associated with construction of the new roundabout and shared use path along Riverside Drive south of SR 161. However, based on plans received by ASP on October 7, 2014, S&ME understands that:

- A new staircase is proposed near STA 205+50 of the bypass road which extends west and down from the bypass to an existing pedestrian path.
- Wall 1 was relocated to the base of the slope at the southwest corner of the existing intersection. This fill wall is 96.5 feet in length, and ranges in exposed height from 2 to 12 feet.
- Wall 2 (previously called Wall 2A) increased in length from 68 feet to 176 feet, but has remained a cut wall with exposed height of approximately 3 to 4 feet.
- Wall 3 (previously called Wall 2B) has been added, which consists of a cut wall 92 feet long with maximum exposed height of 3 to 4 feet.
- Wall 4 (previously called Wall 3) has increased in length from 55 feet to 96.5 feet, but has remained a cut wall with maximum exposed height of approximately 12 feet.

S&ME previously performed a Subsurface Investigation for the planned intersection improvements at SR 161 and Riverside Drive and submitted our results in an engineering report dated October 15, 2013. ASP has requested additional borings to supplement the existing information. This proposal includes additional borings and engineering recommendations pertaining to retaining wall and roadway construction.

4. REGIONAL GEOLOGY

Geologic references indicate that this site is located in a portion of Ohio which has been glaciated. The Physiographic Region is known as the Columbus Lowland area and is surrounded in all directions by relative uplands, having a broad regional slope toward the Scioto Valley with many larger streams. The overburden soils consist of predominantly loamy Wisconsinan-age till and extensive outwash in the Scioto Valley over deep Devonian to Mississippian-age carbonate rocks, shales, and siltstones. Shale bedrock is located at relatively shallow depths in this region at higher elevations and limestone bedrock is located at relatively shallow depths in the lower elevations near the Scioto River.

A review of the ODNR “Abandoned Underground Mines of Ohio” map reveals that no mapped abandoned underground mines are present in the vicinity of the site. A review of the ODNR “Ohio Karst Areas” map indicates probable karst is present in the project vicinity. Karst topography is a landscape shaped by the dissolution of a layer or layers of soluble bedrock, usually carbonate rock such as limestone or dolomite. Many karst regions display distinctive surface features, with sinkholes or dolines being the most common. However, distinctive karst surface features may be completely absent where the soluble rock is mantled, such as by glacial debris, or confined by a superimposed non-soluble rock strata. Some karst regions include the existence of caves, even though evidence of caves that are big enough for human exploration is not a required characteristic of karst.

5. EXPLORATION

5.1 Field Investigation

During the period of July 10 through July 14, 2014, S&ME was on-site and performed a total of six (6) borings. S&ME performed one (1) additional boring on October 22, 2014, near the revised Wall 1 location. The approximate locations of the borings are shown on the Plan of Borings submitted as Plate 2 in the Appendix of this report. The boring program consisted of the following:

- Two (2) borings (B-303 and B-304) for the proposed retaining Wall 1;
- One (1) boring (B-307) for the revised retaining Wall 1 location;
- One (1) boring (B-301) for the proposed retaining Wall 2;
- One (1) boring (B-302) for the proposed retaining Wall 4; and,
- Two (2) borings (B-305 and B-306) along the existing Riverside Dr. for the proposed bypass realignment.

In addition, two (2) probe borings were performed in the vicinity of Wall 1 to determine the depth to bedrock. No sampling of these probe borings was performed.

The boring locations were staked in the field by S&ME using a handheld (sub-meter) GPS unit based on existing utilities and drill rig accessibility. The boring latitude/ longitude coordinates were provided to ASP, who then provided S&ME with ground surface elevations. One exception was the ground surface elevation for Boring B-307, which was estimated from available topographic information.

The borings were performed using an ATV- mounted drill rig and were advanced between sampling attempts using a 4½-inch O.D. continuous flight auger, a 3¼-inch I.D. hollow stem auger, or a 4¼-inch I.D. hollow stem auger . At regular intervals, disturbed but representative samples were obtained by lowering a 2-inch O.D. split-barrel sampler to the bottom of the boring and driving it into the soil by blows from a 140-pound hammer freely falling 30 inches (Standard Penetration Test - ASTM D1586).

Once auger refusal was encountered on the apparent bedrock surface in selected borings, a changeover to rotary drilling techniques was made in Borings B-301, B-302, and B-307. Bedrock core was obtained in these borings using an N-sized wire line (Q) rock core barrel and diamond core bit using water as a circulating/ cooling fluid.

In the field, experienced personnel performed the following: 1) examined all samples recovered from the borings; 2) preserved representative portions of all samples in airtight glass jars or compartmented boxes; 3) prepared a log of each boring; 4) made seepage and groundwater observations; 5) made hand-penetrometer measurements in specimens exhibiting cohesion; and, 6) provided liaison between the field work and the undersigned Project Engineer so that the exploration program could be modified in the event unusual or unexpected subsurface conditions were encountered.

At the completion of drilling, the borings were backfilled with soil cuttings, and where borings were performed within pavement, the existing pavement surface was repaired with an equivalent thickness of cold-patch asphalt. All recovered samples were transported to S&ME's soils laboratory for further examination and testing.

5.2 Laboratory Testing

In the laboratory, the samples were visually identified and on a few representative samples, moisture contents, liquid and plastic limit determinations, and grain size analyses were performed. Based upon the results of the laboratory testing program, soil descriptions contained on the field logs were modified, if necessary and laboratory-corrected logs are submitted as Plates 5 through 11 of the Appendix. Results of the laboratory tests are shown graphically on the individual boring logs and a summary of test results is presented on Plates 12 and 13 of the Appendix. Results of grain size analyses are presented on Plates 14 through 19.

In addition to the above index tests, two (2) unconfined compressive strength (UCS) tests were also performed on portions of the recovered limestone rock cores, with the UCS test results shown on Plates 20 and 21 of the Appendix, and photographs of the recovered cores included as Plate 22.

Soils described in this report have been classified generally in accordance with the Unified Soil Classification System. However, the system has been augmented by the use of special adjectives to designate the approximate percentages of minor soil components. An explanation of the symbols and terms used on the boring logs and definitions of the special adjectives used to denote the minor soil and rock components are presented on Plates 3 and 4 of the Appendix.

5.2.1 Results of Soil Classification Testing

Atterberg limit testing was performed to provide engineering classifications of the on-site soils exhibiting cohesion. A total of five (5) Atterberg limits were performed with liquid limits ranging from 30 to 40 percent, and plasticity indices ranging from 16 to 18 percent for the soils tested. One additional sample was determined to be non-plastic. In addition, grain size distribution analyses were performed on the same six (6) samples, with percentage of material finer than the No. 200 sieve ranging from 18 to 72 percent.

5.2.2 Results of Moisture Testing

Natural moisture content testing was performed on a total of six (6) soil samples. The moisture contents of the on-site soils tested ranged from 6 to 20 percent. These values varied from 10 percent below to 2 percent above their corresponding plastic limit.

6. FINDINGS

Please refer to the boring logs submitted in Appendix A for information on the soil and groundwater/seepage conditions encountered at the boring locations. Inferences should not be made to the subsurface conditions in the areas between or away from the borings without performance of additional borings as well as field verification. In addition, relevant boring logs obtained during our previous subsurface investigation and submitted

in an engineering report dated October 15, 2013, are provided in Appendix B of this report for reference.

6.1 Existing Pavement

The existing pavement thicknesses encountered in the borings and pavement cores are summarized in Table 1 below. Table 1 includes relevant borings from our previous report.

Table 1 – Existing Pavement Thicknesses

Boring No.	Existing Asphalt Thickness (in)	Existing Granular Base Thickness (in)
X-201	11½	--
B-202	11	6
B-205	5	6
B-206	13	5
X-207	13	--
B-209	7	5
B-210	3	8
B-211	6	6
B-304	12	6
B-305	8	10
B-306	7	5

6.2 General Subsurface Stratigraphy

Wall 1

Boring B-307 was performed following relocation of Wall 1 to the base of the existing slope, and encountered 8 inches of topsoil followed by 5.5 feet of possible fill consisting of soft to very-stiff cohesive (silty clay) soil. Beneath the fill, 0.8 feet of weathered limestone was encountered, and bedrock coring was started at a depth of 6.3 feet below existing grade (near El. 773). The bedrock was described as hard limestone.

In addition, two (2) probe borings were performed approximately 30 feet and 60 feet west of B-307 to determine the depth to bedrock. No sampling was performed in these probe borings; however, auger refusal was encountered at a depth of 5.0 and 6.8 feet (near El. 771) in these probe borings.

Borings B-303 and B-304 were performed near the original alignment of Wall 1.

Walls 2 and 3

Boring B-301 was located near the beginning of Wall 2. Beneath 4 inches of topsoil, existing fill / possible fill was encountered to a depth of 7.5 feet. The fill was described as very-stiff silty clay or loose to very-dense sand and gravel. Limestone bedrock was encountered immediately beneath the fill (near El. 803).

Wall 4
Beneath 2 inches of topsoil in Boring B-302, 5.9 feet of medium-dense gravel fill was encountered overlying hard limestone bedrock at a depth of 6.6 feet (near El. 807). Several voids were noted during rock coring in the upper 3 feet of bedrock, and measured RQD was 0% to a depth of 15 feet below existing grade.

Bypass
Subgrade Boring B-305 was performed within the existing pavement of the bypass and encountered 8 inches of asphalt underlain by 10 inches of granular base. Beneath the existing pavement was 3.5 feet of existing fill consisting of very-stiff to hard silty clay, followed by medium-dense gravel to a depth of 7.5 feet. Auger refusal was encountered at a depth of 7.7 feet below grade.

6.3 Groundwater Observations

Groundwater observations were made as each boring was being advanced and measurements were made at the completion of drilling. Groundwater and/or seepage was encountered in Boring B-307 at a depth of 5 feet. Following completion of drilling, or prior to rock coring, each boring was noted as being "dry," that is to say no measurable amount of water had collected in the borehole.

7. ANALYSES AND RECOMMENDATIONS

7.1 Pavement Subgrades

7.1.1 Subgrade Support Parameters

Table C.1 presented in Appendix C was developed using the ODOT GB1 spreadsheet (Ver. 12.00) distributed by the ODOT Office of Geotechnical Engineering (OGE). This spreadsheet summarizes the subgrade soils encountered in the subgrade borings drilled for the project by ODOT/HRB classification, group index, depth, blow-counts, and Atterberg Limit values.

The ODOT GB1 table also computes an average of the estimated values of the California Bearing Ratio (CBR) for the soils encountered at or below the anticipated subgrade level of the proposed roadway profile for the project length. Based on this CBR value and Section 203.1 of the 2008 ODOT Pavement Design Manual (PDM), the Resilient Modulus (M_R) may be computed. The following values may be used during design of the new pavement section for this project:

CBR: 7.0%
M_R: 8,400 psi

These subgrade support values may be used during the pavement design for this project provided that the entire proposed pavement subgrade is prepared in strict accordance with Items 204 and 206 of the ODOT Construction and Materials Specifications (CMS), and the recommendations presented in this report. **Based on the conditions encountered in the borings, it should be anticipated that portions of the existing subgrade may not**

provide a CBR value equal to or greater than 7% and will need to be removed and wasted.

This subgrade evaluation also assumes that the subgrade for the new roadways is composed of the materials encountered in the borings. If, at the time of construction, it is determined that the subgrade may consist of materials significantly different than those encountered, the pavement design subgrade criteria should be reviewed and, if necessary, modified.

Implementing these subgrade support parameters will also require that all borrow soil placed within 3 feet of the final subgrade level is capable of providing subgrade support parameters no lower than the above values. For this reason, S&ME suggests inclusion of the following notes in the General Notes of the project plans under the subheading associated with embankment construction:

> *All borrow soil placed within 3 feet of the final subgrade level must be capable of providing subgrade support parameters no lower than the values used to design the new pavement. Prior to commencing the construction of new fill embankments, representative bulk samples of each type of proposed earthen borrow soil shall be obtained and tested in the laboratory (ASTM D 1883/AASHTO T 193) to verify that the potential borrow soil is capable of providing a California Bearing Ratio (CBR) value equal to or greater than 7% in a properly compacted state.*

In addition to proper subgrade preparation, we recommend that the pavement design and construction include surface and subsurface drainage measures. Water which infiltrates the pavement and remains trapped within the pavement components during traffic loading is one of the leading causes of premature pavement failure. Effective design measures include the use of perimeter swales, perimeter edge drains, curbs, or a combination of these features to collect surface water runoff from areas adjacent to the pavement. Cohesive subgrade soils should be crowned or sloped to promote drainage of infiltrating water towards subsurface drainage collection systems.

7.1.2 Unsuitable Subgrade Materials

Classifications

Boring B-206 (SR 161 near STA 21+65) encountered limestone bedrock at a depth of 3.0 feet below the proposed grade. ODOT GB1 requires rock encountered within 2 feet of the bottom of the asphalt or concrete pavement be removed according to Item 204.05 and replaced with Item 204 Embankment. If the proposed pavement section includes granular base, then rock overexcavation may not be required. Otherwise, rock overexcavation should be anticipated in this area.

None of the borings performed during this investigation encountered soil within 3 feet of the assumed subgrade level which ODOT GB1 considers to be unsuitable either by classification (A-4b, A-2-5, A-5, A-7-5, A-8a, A-8b), or which has a Liquid Limit value in excess of 65%. However, borings performed during the previous investigation for

Riverside Dr. (Borings B-212, B-213, and B-214) encountered A-7-5 soils at the existing subgrade level. If deposits of unsuitable soils are encountered during earthwork or proofrolling operations, S&ME recommends that test pits or hand sampling methods be used to further investigate and delineate the extent of these deposits.

Other Unsuitable Soil Considerations

Existing underground utility lines are known to be present at this site, and the type of material used and the relative compactness of backfill within these utility trenches are unknown. Some instability of utility trench backfill may occur during proofrolling and some recompaction of granular trench backfill may be necessary. Additionally, if water has accumulated within the utility backfill, the subgrade soil in the vicinity of any saturated utility trenches may also have become weak, soft, and wet such that proofrolling may identify these additional areas as requiring overexcavation and replacement. In any case, care should be taken not to disturb any shallow utilities during proofrolling and overexcavation activities.

Particular attention should also be given to the ditches and drainage swales adjacent to the existing pavement or in areas where the pavement is to be added, widened, or realigned, as unsuitable (e.g., soft, saturated, possibly organic) soil requiring removal may be present in the ditches or swales. S&ME recommends that these areas be closely examined prior to, and monitored during, proofrolling and earthwork operations. If subgrade distress or displacement becomes evident in these areas during construction, these materials may need to be overexcavated and replaced prior to pavement widening. For this reason, ASP may consider including a 1- to 2-foot deep overexcavation of existing ditches in the project excavation quantities. These ditch overexcavations may be backfilled with properly compacted soil (ODOT CMS Item 203, or Item 204 if within 12 inches of proposed subgrade).

Because of the variable nature of the existing soils encountered in the borings and the wide spacing of the explorations, it is possible that areas of unsuitable subgrade materials not encountered in the borings may be encountered during proofrolling and earthwork operations. Visual observation of the proofrolling procedures by the Geotechnical Engineer of Record or his/her designated representative may potentially result in a reduction of overexcavation of unsuitable soils in these areas. Additionally, S&ME recommends that construction traffic be minimized or restricted once the planned soil subgrade level has been exposed or attained.

7.1.3 ODOT GB1 Subgrade Analysis

In accordance with the current ODOT GB1, a comparison of the laboratory-measured moisture content to the estimated optimum moisture content of the subgrade soil, along with the normalized blow-count (N_{60}) from SPT sampling, may be used as an indicator of the potential need for subgrade treatment or remediation of unstable subgrade soil. The acceptable options presented by GB1 to remediate and establish a stable soil subgrade in areas identified as problematic are either to “excavate and replace”, or utilize chemical stabilization.

Table C.1 in Appendix C summarizes the laboratory-measured moisture content for the samples from each boring with respect to the estimated optimum moisture contents, along with the lowest N value (N_{60L}) obtained from the Standard Penetration Tests performed in each of these borings. This table also indicates the recommended Item 204 "excavate and replace" depths per GB1 at each boring location, along with an overall assessment of the suitability of various types of chemical stabilization on this project.

Table C.1 indicates that 8% (1 of 13) of the borings performed as part of this investigation encountered soil at or just below the assumed subgrade level with characteristics defined as problematic (excessive soil moisture content or a low N_{60} value) by the procedures recommended in GB1. ODOT GB1 suggests that when 30% or more of the proposed subgrade requires remediation, global remediation/stabilization of the entire project subgrade should be considered. **Based on this analysis, global remediation is not recommended for the project.**

7.1.4 Subgrade Remediation

Based on the output from the ODOT GB1 spreadsheet presented on Table C.1 in Appendix C, Table 2 below summarizes the recommended type and estimated longitudinal and required horizontal limits of remediation for this project in accordance with the guidelines presented in ODOT GB1.

Table 2 – Recommended Subgrade Remediation

Location	Estimated Limits	Recommended Remediation	Approximate Lateral Extents
Riverside Dr.	Begin Project to STA 95+00	15 inches Excavate/Replace	Extend to 18 inches outside the proposed pavement, paved shoulders, or paved median areas, including beneath curbs and gutters.
SR 161	STA 20+80 to STA 22+95	3 inches * Excavate/Replace	

* Anticipated rock overexcavation. See Section 7.2.3 Bedrock Subgrade for discussion.

In addition to the subgrade remediation areas denoted in Table 2, additional areas may require "excavate and replace" remediation based on proofrolling observations made during construction, particularly at Borings B-304 (SR 161 near STA 15+00) and B-305 (bypass near STA 14+85).

7.2 Roadway Embankment Construction

Preliminary profile information provided by ASP indicates that as much as 10 feet of new fill will be necessary to attain the desired profile for the realigned portions of Riverside Drive and SR 161. Minimal cuts are planned along the proposed alignment, with the exception of a 200-foot section of the realigned bypass, which will require up to 8 feet of cut. Stability analyses were not performed for the proposed embankments.

7.2.1 Embankment Foundation/Subgrade Preparation

Prior to commencing earthwork operations, it is recommended that all existing pavement, structures, sod and topsoil, existing trees including their entire root mass, vegetation, and other miscellaneous materials be completely removed from the entire footprint of the proposed roadway/embankment. Prior to the placement of any new fill for embankment widening, it is recommended that the entire footprint of the embankment be exposed and proofrolled in accordance with ODOT CMS Item 204.06, and Item 204 of the ODOT Construction Inspection Manual of Procedures, to detect any soft, wet or weak zones that might be present.

If any such zones are present, the materials contained in these zones should be either scarified, dried, and thoroughly recompacted in place in accordance with ODOT Item 203.07, or be removed and the overexcavation filled in a controlled manner with compacted, suitable embankment material (Item 203.02) and the recommendations presented in this report. S&ME recommends that the Geotechnical Engineer of Record or his/her designated representative be present at the time of proofrolling, as visual observation of these procedures may result in a partial reduction of undercutting of unsuitable soils.

7.2.2 "Fill" Areas

After all unsuitable materials have been removed during the site preparation process, and prior to commencing fill placement, it is recommended that horizontal benches be cut into all existing sloping surfaces to permit placement and compaction of new fill in horizontal lifts. In areas where new fill is to be placed on the side of an existing embankment which is steeper than 4H:1V, S&ME recommends that "Special Benching" procedures as outlined in the ODOT Geotechnical Bulletin GB2, *Special Benching and Sidehill Embankment Fills* (ODOT GB2), dated November 4, 2008, and the 2009 ODOT Construction Inspection Manual of Procedures be utilized.

Sketches illustrating several "typical" Special Benching configurations for sidehill fills on various slopes are included in Figures 1, 2 and 3 on pages 3 and 6 of the ODOT GB2 document. These configurations require a minimum distance of 8 feet between the crest of the bench back-slopes and the face of the new slope to permit compaction and grading equipment to work on a horizontal surface.

During Special Benching procedures, S&ME also recommends the following: 1) only one bench be exposed at any given time and that excavation of the next bench should not be permitted until embankment fill placement and compaction has been completed to the top of the backslope of the previous bench; and, 2) the length of any given bench that is exposed should not exceed the quantity of embankment fill which may be properly placed and compacted in one day. Additionally, S&ME recommends that the final, completed side slopes of embankments be constructed no steeper than 2H:1V.

As stated in the ODOT GB2, wherever "Special Benching" is used, Plan Note G110 from the ODOT L&D Manual, Vol. 3, should be included in the General Notes.

7.2.3 "At-Grade" and "Cut" Areas

Soil Subgrade

Once the desired subgrade elevation has been attained in "cut" and "at-grade" areas, and after any unsuitable subgrade materials have been overexcavated and properly backfilled, the subgrade soil beneath the entire roadway and shoulder pavement area should be scarified and recompacted to a depth of 12 inches below the subgrade level in accordance with ODOT Item 204.03. During recompaction, the moisture content of the subgrade soil should be maintained or adjusted in accordance with ODOT Item 203.07.A.

Final subgrade proofrolling should be performed in accordance with Item 204.06 of the ODOT CMS, and Section 204 of the 2009 ODOT Construction Inspection Manual of Procedures. If weak, wet, or soft zones are present, it is recommended that the materials contained in these zones should be removed and replaced in accordance with Item 204.04. It is recommended, however, that the maximum depth of any necessary overexcavation be limited to 5 feet, even where the bottom remains unstable. In these cases, it is recommended that a geotextile (ODOT Item 712.09, Type D) be placed at the bottom of the overexcavation and then the undercut area backfilled with compacted granular material (ODOT Item 703.16.C Type C or D Granular Material). To assist the paving process, it may be desirable to top this granular backfill with a few inches of Item 703.16.C.2 (Type B).

Following the completion of the scarification, recompaction, and proofrolling of the subgrade in these cut and at-grade areas, it is recommended that construction traffic be restricted from traveling on the compacted subgrade. Cohesive subgrade soils subjected to repetitious construction load and moisture fluctuations, which may occur as a result of exposure to rainfall and/or surface water runoff, may exhibit subgrade instability.

Bedrock Subgrade

Although none of the borings performed for this investigation encountered bedrock within 2 feet of the proposed subgrade level, Borings B-206 and B-211 encountered limestone bedrock at a depth of 2.2 feet. Because of the wide spacing of the borings, consideration should be given to the possibility that bedrock may be encountered at, or within 2 feet of, the proposed subgrade level.

In accordance with Item 204.05 of the ODOT CMS, the proposed pavement subgrade should be undercut to a depth of 2 feet below the bottom of the asphalt or concrete pavement. The overexcavation should also extend laterally to at least one foot outside the proposed pavement shoulder. This overexcavated material must be replaced with compacted, suitable embankment material (ODOT CMS Item 204.02) which possesses subgrade support characteristics consistent with the design CBR for the pavement section. S&ME recommends that consideration be given to using ODOT Item 703.16.C.2 Granular Material B (Item 304).

S&ME also recommends that consideration be given to placing a geotextile fabric (ODOT Item 712.09, Type D) at the bottom of subgrade overexcavations in rock prior to

backfilling to reduce the potential for loss of backfill material and granular base course into any large fractures or voids that may be present in the limestone bedrock.

Additionally, it must be emphasized that **a direct correlation should not be made between the performance of the drilling rigs and the ability of conventional construction equipment to excavate bedrock at this site.**

7.2.4 Borrow Soil and Backfill Compaction Recommendations

Soil used to backfill any overexcavated subgrade materials or used as fill to attain the design subgrade level should consist of clean inorganic soils free of debris and cobbles, and should be thoroughly compacted in accordance with ODOT CMS (Item 203, and when within 12 inches of subgrade level, Item 204). Additionally, S&ME recommends that the moisture content of all soil used as fill be maintained within -2% to +2% of the optimum moisture content during all compaction operations. Borrow materials should not be placed in a frozen condition or upon a frozen surface, and any sloping surfaces on which new fill is to be placed should first be benched in accordance with either Item 203.05 or ODOT GB2, depending on the slope of the existing ground surface at each location.

Compaction requirements for the construction of earthen embankments are based on ODOT CMS Item 203.07.B (or Item 204.03 when within 12 inches of subgrade level), which specifies a minimum percent compaction based on the dry unit weight of the type of soil fill being placed as borrow. S&ME recommends that sampling and testing of all proposed borrow material be performed prior to construction to verify that the borrow soils are suitable for the planned construction. Additionally, **all soil used as new fill or backfill within 3 feet of the proposed subgrade level must be capable of providing subgrade support characteristics in a final compacted state that are no less than the value used for the design of new pavement (see Section 7.1.1 of this report).**

It should be noted that the cohesive soils encountered in the borings, if exposed to inclement weather or rainfall, may rapidly absorb additional moisture and weaken. It is imperative that these soil types not be exposed to rainfall while in a loosened state (such as during disking and drying for moisture conditioning). Should these materials become sufficiently saturated that additional moisture conditioning is impractical, the material should be removed and wasted. Therefore, it is recommended that moisture conditioning only be performed when extended periods of suitable weather are anticipated, and that only the amount of borrow soil be exposed that may be moisture conditioned and properly compacted during suitable weather periods.

7.2.5 Yielding Subgrade

Laboratory tests performed on the near-surface soils at this site indicate that the anticipated subgrade soils may be considered moderately to highly plastic and sensitive to the effects of moisture and repetitive construction loads. Soil of this type may "fail" (i.e., rut or pump unacceptably) during proofrolling, especially if the subgrade soils become wet and the moisture contents increase. If such yielding does occur, it is imperative that

the subgrade be stabilized before a full-depth pavement is constructed, even if an aggregate base is to be used.

Restricting construction activity and permitting the subgrade to dry will frequently eliminate yielding if weather conditions are favorable. If exceptionally good drying weather is not expected or does not occur, however, it will likely be necessary to scarify the subgrade to a depth of eight to twelve inches and to recompact the loosened soil subsequent to a period of drying and aerating. The process of drying and aerating is dependent entirely upon weather conditions, and it would be advisable to limit the work area to a size which can be scarified and compacted the same day to avoid exposure to precipitation. If scarification and aeration do not result in significant drying so that compaction can be accomplished the same day, it must be concluded that the weather is not favorable for the procedure.

Another procedure that can be used to improve a yielding subgrade would be to remove or "undercut" severely disturbed areas to a depth of twelve inches or greater and to fill these areas with a more suitable, compacted soil. This procedure is usually performed during the original site preparation but, if yielding does not become evident until after the subgrade has been exposed to repetitive preliminary paving operations, this procedure would have to be repeated prior to performing the paving work.

Other procedures for improving an unusually weak, wet or severely yielding subgrade include the use of chemical stabilization (lime, lime/fly-ash, cement, etc.). At times, it is possible to use a geogrid or geotextile in conjunction with the aggregate to provide the added support necessary to place the pavement without improving the subgrade. It is not necessarily predicted that the natural soils at this site will yield and become unstable. It is believed, however, that you should be made aware of this phenomenon which can occur even in soils which appear to be exceptionally strong when initially exposed in cuts, and of the advisability of improving a yielding subgrade before constructing pavements.

7.3 Retaining Wall Foundation Recommendations

At the time of this report, final structural loading, foundation sizes and bearing elevations were not available. However, based on Stage1 plans provided by ASP to S&ME on October 7, 2014, and email correspondence on November 17-18, 2014, the anticipated wall type, bearing elevation, and bearing stratum is summarized in Table 3 on the following page.

Table 3 – Retaining Wall Summary and Anticipated Bearing Elevations

Retaining Wall	Type	Approx. Length (ft)	Approx. Height (ft)	Anticipated Bearing Elevation (ft)	Anticipated Bearing Stratum
Wall 1	Cast-in Place (Fill)	96½	18	~ El. 773	Limestone bedrock
Wall 2	Cast-in Place (Cut)	176	4	~ El. 798 to El. 804	Loose to med. dense sand, or limestone bedrock
Wall 3	Cast-in Place (Cut)	92	4	~ El. 798 to El. 800	Loose to med. dense sand, or limestone bedrock
Wall 4	H-Pile & Lagging (Cut)	96½	12	H-piles socketed into bedrock	Limestone bedrock

7.3.1 Shallow Foundation Bearing Resistance

Based on the Stage 1 plans provided to S&ME, we understand that a new staircase is proposed near STA 205+50 of the bypass road which extends west and down from the bypass to an existing pedestrian path. Proposed bearing elevations were not available at the time of this report for the staircase; however, we understand that small drilled shafts are planned beneath each staircase post, and that the project plans will include a note requiring the contractor to embed the footings 6 inches into competent rock. Borings were not requested at the proposed staircase location to determine the depth to bedrock, but based on nearby borings and regional geologic information, limestone bedrock is anticipated to be present at relatively shallow depths beneath the over burden soils. Therefore the staircase foundation recommendations are based on presumptive bearing values from the Ohio Building Code.

Wall 1 will consist of a conventional cast-in-place retaining structure with a shallow spread foundation bearing on limestone bedrock, based on email correspondence with ASP on November 17-18, 2014. Top of bedrock is anticipated to be present near El. 773 at the location of Wall 1.

Based on preliminary plan information, S&ME understands that proposed Walls 2 and 3 will be supported on spread foundations and bearing at approximately El. 798 to El. 804. Based on the proposed bearing elevation and the subsurface conditions encountered in Boring B-301, it is anticipated that the spread foundations for Walls 2 and 3 will bear in existing loose to medium-dense sand and gravel fill, or medium hard to hard limestone bedrock.

Table 4 on the following page summarizes the recommended nominal and factored unit bearing resistances (q_n and q_R) at the service and strength limit states for spread foundations bearing in medium-hard to hard limestone at the staircase and Wall 1, and in loose to medium dense granular soil at Walls 2 and 3. In order to achieve the recommended factored bearing resistance provided in Table 4, the bearing surface should

be carefully cleaned, with any weathered or fractured rock being removed, prior to placement of concrete. In addition, the soil or bedrock exposed at the foundation bearing elevation should be evaluated by a qualified Geotechnical Engineer to confirm that the footings bear on suitable material.

Table 4 – Recommended Bearing Capacities (Nominal and Factored) for Spread Footings – Service and Strength Limit States

Location	Limit State	Anticipated Bearing Elevation (ft)	Recommended Nominal Bearing Resistance, q_n (ksf) (1)	Resistance Factor, φ_b	Recommended Factored Bearing Resistance, q_R (ksf) (1)
Staircase	Service	TBD (2)	16.0	1.0 (3)	16.0
	Strength		19.5	0.45 (4)	8.8
Wall 1	Service	El. 772.5	20.0	1.0 (3)	20.0
	Strength		175.0	0.45 (4)	78.8
Walls 2 & 3	Service	El. 798 to El. 805	4.0	1.0 (3)	4.0
	Strength		7.9	0.45 (4)	3.5

1 **For vertical loading only. Foundations may need to extend deeper to generate passive pressure to resist lateral loads.**
2 **Bearing elevation to be field determined based on a minimum 6-inch embedment into competent limestone bedrock. Regardless of depth to bedrock, footing should be embedded at least 3 feet below proposed grade for frost protection.**
3 **Article 10.5.5.1 of the AASHTO LRFD Bridge Design Specifications.**
4 **Table 10.5.5.2.2-1 of the AASHTO LRFD Bridge Design Specifications.**

If weaker soils or existing uncontrolled fill are present at or just below the proposed bottom of foundation elevation, the material should be overexcavated and the foundation lowered to more suitable soils or the overexcavation below plan foundation bearing elevation should be backfilled in accordance with the most current ODOT CMS.

Structural loading information and final foundation sizes were not available at the time of this report; however, considering similar retaining wall projects and the presence of rock, settlements are expected to be within tolerable ranges (less than 1-inch of total settlement and differential settlements not exceeding ½-inch) provided the site preparation and foundation construction are performed in accordance with the recommendations provided in this report. S&ME also recommends that foundations not bear partially on rock and partially on soil to reduce the potential for abrupt differential settlements.

The sidewalls of the foundation excavations should be either sloped back or braced in accordance with the most recent OSHA excavation guidelines. Any surface water will need to be diverted away from the foundation excavation area during construction of the walls. The foundation bearing surfaces should be kept dry and free from standing water during all construction activities and, if applicable, loose rock should be removed prior to placing concrete. The bearing surface should be free of any loose rock fragments and

should be inspected for any crevices, fractures, or voids. Although no large voids or large solution cavities where noted in the retrieved rock cores, the limestone present in this area of the state is known to consist of karst deposits. Filling solution cavities and fractures with lean concrete may be necessary once the bedrock surface is exposed.

As these recommendations have been based on the currently available preliminary information, S&ME requests the opportunity to review the final proposed foundation design to verify that the intent of our recommendations has been followed.

7.3.2 Eccentricity (Overturning)

Proposed spread foundations for structures which are subjected to eccentric loadings should be designed to account for such loading. For reference, Articles 10.6.1.3, 10.6.3.3 and 11.6.3 of the latest AASHTO LRFD Bridge Design Specifications (BDS) provide guidance on designing for eccentric loading. Once the footing design has been finalized, it is recommended that the structural design confirm that the eccentricity of the foundation is less than 0.33 or 0.45 of the appropriate footing dimension (width and/or length) for footings on soils or rock, respectively (AASHTO Article 10.6.3.3).

7.3.3 Sliding Resistance

Sliding resistance to lateral loads is provided by the weight of the structure in combination with the friction developed along the bottom of the foundations at the interface with the underlying soils or rock, as well as from passive resistance from the soil available throughout the design life of the structure. The factored resistance against failure by sliding (R_R) should be determined using Eq. 10.6.3.4-1 of the most recent AASHTO LRFD BDS.

Where proposed foundations bear on loose to medium-dense sand, S&ME recommends that the nominal sliding resistance (R_n) be calculated by multiplying the total vertical force (V) acting on the foundation by 0.5 (see Eq. 10.6.3.4-2 of the AASHTO LRFD BDS). The factored resistance to sliding may then be computed using a resistance factor for shear resistance (φ_τ) of 0.80 for foundations on sand.

Where proposed foundations bear on limestone bedrock, S&ME recommends that the nominal sliding resistance (R_n) be calculated by multiplying the total vertical force (V) acting on the foundation by 0.8 (see Eq. 10.6.3.4-2 of the AASHTO LRFD BDS). The factored resistance to sliding may then be computed using a resistance factor for shear resistance (φ_τ) of 0.80 for foundations on limestone bedrock.

Additional resistance to sliding of spread footings could be derived from increasing the width of the footing or from passive pressure developed along the inside toe of the footing or a shear key. A nominal passive resistance of 200 psf and 900 psf per foot of effective embedment depth into the existing sand fill or limestone bedrock, respectively, should be used for the footings provided that the footings will bear at or below the anticipated bearing elevation shown in Table 3 of this report, and provided the footing concrete is placed flush ("neat") against the rock face of the excavation. Passive resistance should be neglected above the anticipated depth of scour and/or frost. S&ME

recommends a resistance factor for passive resistance (φ_{ep}) of 0.50 be used to compute the factored passive resistance. It is important that all loosened soil or rock be removed from the face of the foundation excavation that will provide the passive resistance.

7.3.4 Drilled Shaft – Lateral Load Resistance

S&ME understands that Wall 4 will consist of predrilled holes into bedrock with H-piles and lagging. We further understand that the H-piles will not be subject to axial loads; therefore, drilled shaft axial load resistance values have not been provided. However, the response of the shafts to the horizontal and moment loading provided by ASP was analyzed using the computer program LPILE Plus 6.0© (Ensoft, Inc., 2011). The properties and loading information used in the analyses for the proposed drilled shafts are summarized in Table 5 below.

Table 5 – Summary of Shaft Design Considerations

Design Item	Design Information
Shaft Diameter (in rock)	24 inches
Alignment	Single row of H-piles socketed into bedrock with 24-inch diameter shaft
Shaft Spacing	8.0 ft (4*D)
Vertical Reinforcement	HP 12x72
Concrete	f_c' = 3,000 psi
Top of Shaft Elevation	El. 798
Shaft Tip Elevation	El. 791
Service Loads (at bottom of wall) ▪ Max Moment (kip-feet) ▪ Vertical (kip) ▪ Horizontal (kip)	 111.4 0 29.3
Factored Loads (at bottom of wall) ▪ Max Moment (kip-feet) ▪ Vertical (kip) ▪ Horizontal (kip)	 167.0 0 44.0
Flexural Rigidity (EI)	Varies Nonlinearly – Calculated by LPILE

[1] Service Loads provided by American Structurepoint
[2] Factored Loads = Strength I Limit State, provided by American Structurepoint
[3] Geotechnical Loads = Factored Loads divided by resistance factor φ=0.67

The top of shaft elevation assumed during the LPILE analysis is El. 798, which represents the elevation roughly 3 feet below the base of the wall, as the bedrock above this level is discounted by the ODOT BDM. Deflections above this level should be calculated using the computed slope at the pile head (El. 801 in LPILE model).

LPILE Plus 6.0© does not directly analyze 3-dimensional shaft groups; therefore, shaft response was modeled individually. Based on the pile spacing, and a p-multiplier as determined from the AASHTO LRFD BDS, group effects are not anticipated to be significant. Because the limestone bedrock at this site was not only relatively strong but also moderately to highly fractured, S&ME performed analyses using both the 'weak rock' and the 'strong rock' model in LPILE.

Considering both LPILE models and their respective deflections and inflection (zero deflection) points for the loads provided by ASP, S&ME recommends a bedrock socket for these drilled shafts of 7 feet below El. 798, or a minimum bottom of shaft elevation of El. 791. This recommended socket length is sufficient to provide 2 points of inflection below the maximum value when checking the geotechnical resistance of the drilled shaft against a lateral load of 1.5 times the provided strength limit state value, as discussed in the ODOT Geotechnical Bulletin GB7.

The results of these analyses computed a shaft head deflection of 0.21 inches under the service loading. This deflection has a corresponding pile head slope of 0.007 radians (away from the direction of the load) at El. 801. The maximum calculated shear and moment under the strength limit loading is 180.1 kips and 305.5 ft-kips, respectively.

The output of the LPILE analysis is presented in Appendix D of this report.

7.3.5 Drilled Shaft Construction Recommendations

The new drilled shafts should be constructed in accordance with Item 524 of the ODOT CMS. S&ME recommends that provisions be made for providing a temporary casing during drilled shaft excavation above the bedrock, since the granular soils encountered above the bedrock may cave during drilled shaft construction. The casing should extend into the underlying bedrock in an attempt to seal the shafts from influx of water and rock fragments. The temporary casing may then be removed during concrete placement; however, precautions should be taken to ensure that the structural integrity of the shafts is not compromised by caving of material during removal of the casing. The concrete level (head) should also be maintained far enough (at least 4 feet) above the bottom of the casing during withdrawal to prevent the entry of soil/rock and water into the shafts.

Sumps may be required to remove water accumulation (seepage) from the drilled shafts, otherwise placement of concrete should use approved tremie or pumping methods. It should be noted that if the shafts are constructed in the dry, the potential for the inclusion of voids or pockets of deleterious material within the shafts is minimized.

All drilled shaft construction should be observed by a qualified geotechnical engineer or an experienced technician working under direction of the engineer to ensure that the drilled shafts are installed plumb, that the shaft bottoms are sufficiently clean and dry prior to concrete placement, and that the shafts extend into the appropriate bearing stratum as recommended.

7.3.6 Global Stability

S&ME performed slope stability analyses of a transverse cross-section of Walls 1, 2, and 3 using the 2-D limit equilibrium computer program SLIDE v.6.031 developed by Rocscience, Inc. The program computed factors of safety utilizing the Spencer method for circular failure surfaces. Stability computations were performed for end of construction and steady state conditions.

Based on the results of the analyses, S&ME anticipates that the minimum Factor of Safety with respect to global stability for Walls 1, 2, and 3 will be no less than 1.3, which is the minimum value required by the ODOT “Geotechnical Engineering Design Checklists”.

7.4 Lateral Earth Pressures

The proposed retaining walls must be designed to withstand lateral earth pressures, as well as hydrostatic pressures, that may develop behind the structure. The magnitude of the lateral earth pressures varies on the basis of soil type, permissible wall movement, and the configuration of the backfill.

To minimize lateral earth pressures, the zone behind the walls should be backfilled with granular soil, and the backfill should be effectively drained. For effective drainage, a zone of free-draining gravel (ODOT CMS Item 518.03) should be used directly behind the structures for a minimum thickness of 24 inches in accordance with ODOT CMS Item 518.05. This granular zone should drain to either weepholes or a pipe, so that hydrostatic pressures do not develop against the walls.

The type of backfill beyond the free-draining granular zone will govern the magnitude of the pressure to be used for structural design. Pressures of a relatively low magnitude will be developed by the use of granular backfill, whereas a cohesive (clay) backfill will result in the development of much higher pressures.

It is recommended that granular backfill be used behind the walls. The backfill should be placed in a wedge formed by the back of the structure and a line rising from the base of the structure at an angle no greater than 60 degrees from the horizontal. Granular backfill behind the structure should be compacted in accordance with ODOT CMS Item 203, "Roadway Excavation and Embankment." Overcompaction in areas directly behind the walls should be avoided as this might cause damage to the structure.

If it is anticipated that the walls will be fixed at both the top and bottom preventing significant lateral deflections or rotations from occurring, then an "at-rest" earth pressure condition exists. If the walls are capable of deflecting a distance of at least 0.25 percent

of their height, then an "active" earth pressure condition may be assumed for design purposes. Design parameters for the various conditions are presented in Table 6 below. To use the equivalent fluid unit weights presented in Table 6 for the granular backfills, the backfill must be placed at a minimum in a wedge formed by the back of the wall and a line rising from the base of the wall at a maximum 60-degree angle from the horizontal. **The equivalent fluid weights should be adjusted appropriately to account for any sloping backfill.**

Table 6 – Soil Parameters for Long Term Design of Below-Grade Walls

Backfill: Parameters:	**Cohesive Backfill**	**Bank Run Sand & Gravel** (1) (2)	**Coarse Angular Gravel (No. 57 limestone)** (1)
Equivalent Fluid Unit Weights (pcf)			
Drained			
Active Case	63	35	30
Passive Case	250	446	422
At-Rest Case	88	55	45
Undrained			
Active Case	94	84	79
Passive Case	190	288	247
At-Rest Case	107	97	84
Earth Pressure Coefficient			
Active Case	0.5	0.28	0.26
Passive Case	2.0	3.57	3.84
At-Rest Case	0.7	0.43	0.41
Unit Weight (pcf)			
Moist	125	125	110
Saturated	145	145	130
Buoyant	82	82	68
Friction Angle (Φ)	20°	34°	36°

(1) These design parameters are to be used only if granular backfill is placed in a wedge as described in the text.

(2) The parameters shown in the table for bank run sand and gravel can also be used for the on-site granular soils having less than 20% material passing the No. 200 sieve.

Each structure must also be designed to withstand the vertical load resulting from the weight of any fill and pavement that may be placed over the structure in addition to traffic surcharge loads. To estimate vertical loading, a total unit weight of 130 pcf may be used for soil and granular fill materials.

7.5 Groundwater Considerations

Based on observations made during the field work, it is not anticipated that significant quantities of groundwater will be encountered during construction activities. Shallow excavations, such as subgrade over-excavations, extending through only cohesive soil may encounter small amounts of seepage. Deeper excavations, such as excavations for any utilities, extending through granular seams, pockets/lenses, or layers may encounter larger groundwater flows. The quantities of groundwater encountered are anticipated to be controllable by bailing or pumping from temporary sumps. If pumping from sump pits is not effectively keeping the groundwater below excavation levels, then S&ME should be retained to provide additional recommendations.

During construction, it is recommended that all excavations for the proposed retaining wall foundations be protected from surface runoff and storm water flow, and surface runoff and precipitation should not be permitted to collect and stand in excavations as the soil will absorb water. Soils softened by standing water or disturbed by construction activities should be removed from excavations before pavement or concrete is placed. S&ME also recommends that the sides and bottoms of all excavations be monitored during the construction of the structure.

Additionally, all excavations should be either sloped back or braced in accordance with the most recent OSHA excavation guidelines.

8. FINAL CONSIDERATIONS

The analyses, conclusions and recommendations presented in this report are based on project information provided by American Structurepoint. S&ME should be retained to review the final design plans to verify that the intent of our engineering recommendations have been properly incorporated into the design documents. It is also recommended that S&ME be retained to observe the subgrade proofrolling, perform fill/backfill testing, and observe foundation construction to confirm that our recommendations are valid or to modify them accordingly. S&ME cannot assume responsibility or liability for the adequacy of recommendations if we are not retained to observe construction.

The contents of this report are also based on the subsurface conditions as they existed at the time of our field investigation, and further on the assumption that the exploratory borings are representative of actual subsurface conditions throughout the area investigated. It should be noted that actual subsurface conditions between and beyond the borings might differ from those encountered at the boring locations. If subsurface conditions are encountered during construction that vary from those discussed in this report, S&ME should be notified immediately so that we may evaluate the effects, if any, on design and construction.

APPENDIX A

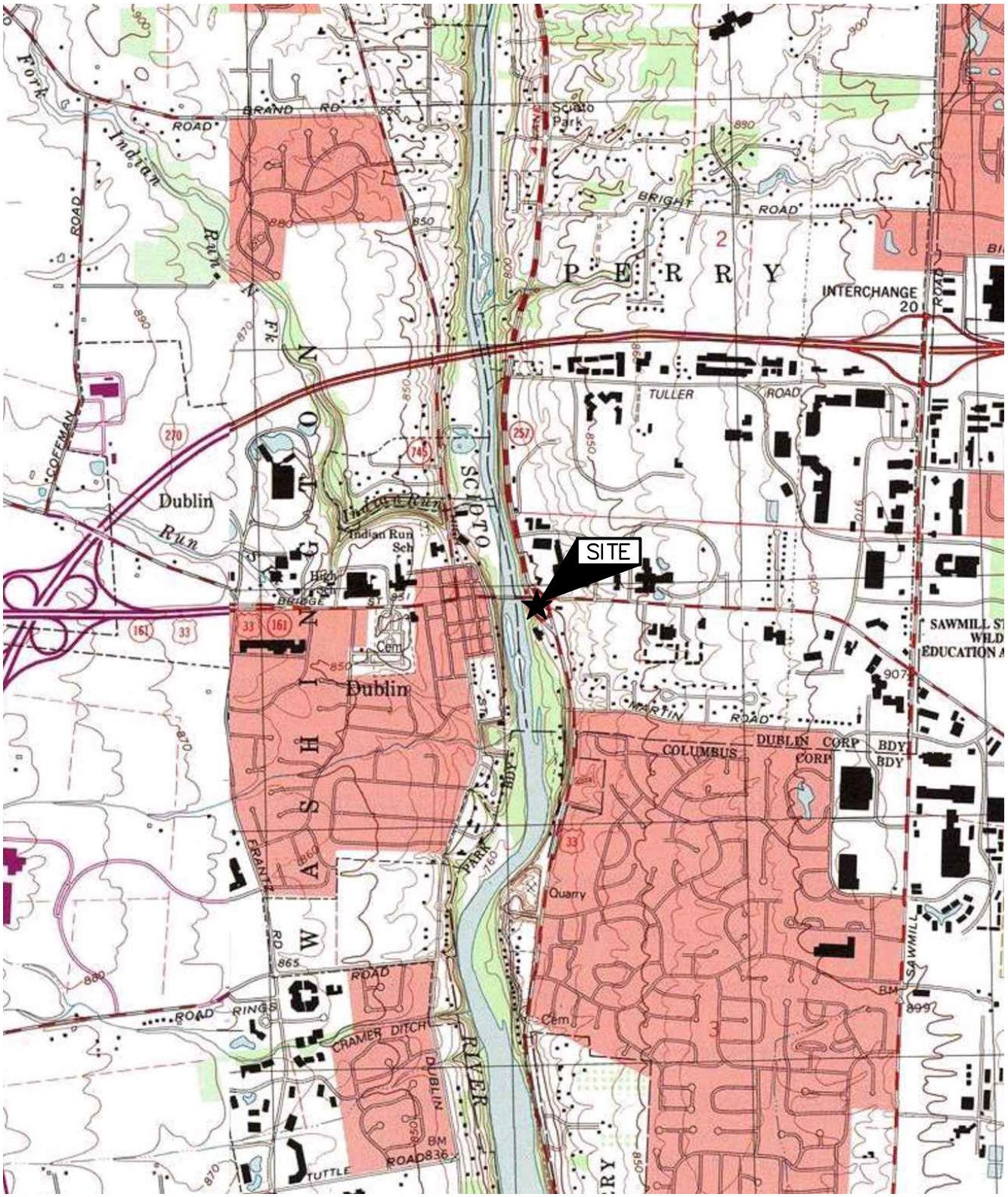

USGS Mapping:
NW Columbus Quad

0 2000 4000
SCALE INFEET

VICINITY MAP

DUBLIN BRIDGE ST CIVIC CORE PROJECT
SR 161 & RIVERSIDE DR INTERSECTION
DUBLIN, OH

Project: 1117-14-012A	
Drawing Date: 7-15-2014	
Last Updated: 7-18-2014	
Drawn By: PRR	
Approved By: AKK	
Scale: GRAPHIC	1:1

S&ME
WWW.SMEINC.COM
ENGINEERING FIRM. 03530

PLATE 1

Images: ~ POB.tif ~ sr161TOPO!map.TIF
Xrefs:
File Last Updated: Jul 18, 2014
Plot Info: 7-18-2014 @ 11:46am By: prock
S&ME Filename: I:\DEPTS\cadd\Drawings\BST Projects\1117-Geotechnical\1117-14-012\1117-14-012A\PLANS\v-map_POB.dwg Layout: V-Map

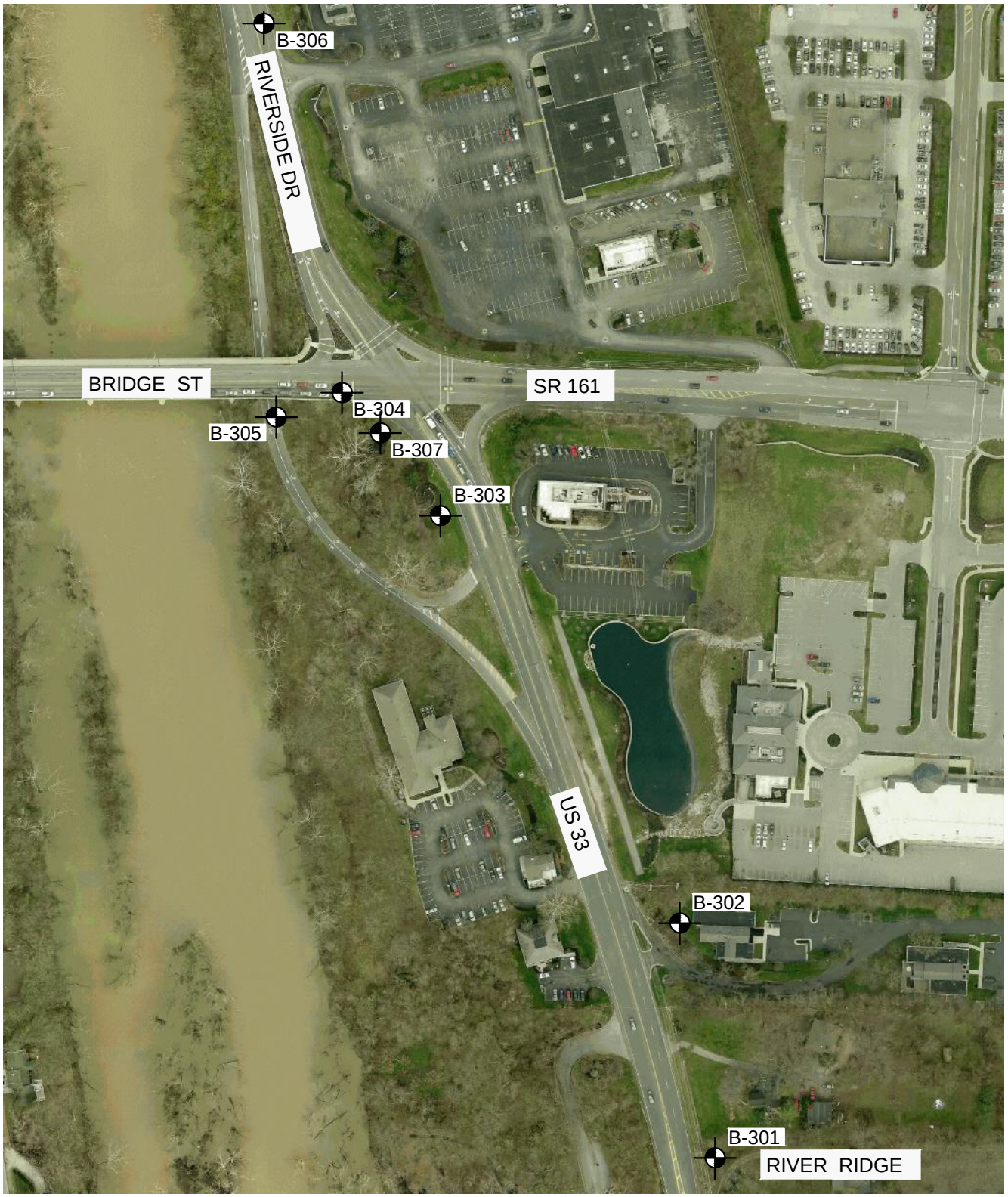

LEGEND

B-301

BORING NUMBER AND LOCATION

0 200 400

SCALE IN FEET

PLAN OF BORINGS

DUBLIN BRIDGE ST CIVIC CORE PROJECT
SR 161 & RIVERSIDE DR INTERSECTION
DUBLIN, OHIO

Project: 1117-14-012A	
Drawing Date: 7-15-2014	
Last Updated: 10-28-2014	
Drawn By: PRR	
Approved By: CJN	
Scale: GRAPHIC	1:1

S&ME
WWW.SMEINC.COM
ENGINEERING FIRM. 03530

PLATE 2

Images: ~ POB.tif ~ POBIMAGE.jp2 ~ sr161TOPO!map.TIF
Xrefs:
File Last Updated: Oct 28, 2014
Plot Info: 10-28-2014 @ 2:05pm By: prock
S&ME Filename: I:\DEPTS\cadd\Drawings\BST Projects\1117-Geotechnical\1117-14-012\1117-14-012A\PLANS\v-map_POB.dwg Layout: POB

EXPLANATION OF SYMBOLS AND TERMS USED ON BORING LOGS FOR SAMPLING AND DESCRIPTION OF SOIL

SAMPLING DATA

- Blocked-in "SAMPLES" column indicates sample was attempted and recovered within this depth interval.

- Sample was attempted within this interval but not recovered.

2/5/9 - The number of blows required for each 6-inch increment of penetration of a "Standard" 2-inch O.D. split-barrel sampler, driven a distance of 18 inches by a 140-pound hammer freely falling 30 inches. The raw "blowcount" or "N" is equal to the sum of the second and third 6-inch increments of penetration. Addition of one of the following symbols indicates the use of a split-barrel other than the 2" O.D. sampler:

- 2S - 2½"O.D. split-barrel sampler
- 3S - 3" O.D. split-barrel sampler

N_{60} - Corrected Blowcount = [(S&ME Drill Rod Energy Ratio) / (0.60 Standard)] X N_{raw}

P - Shelby tube sampler, 3" O.D., hydraulically pushed.

R - Refusal of sampler in very-hard or dense soil, or on a resistant surface.

50-2" - Number of blows (50) to drive a split-barrel sampler a certain number of inches (2), other than the normal 6-inch increment.

SD - Split-barrel sampler (S) advanced by weight of drill rods (D).

SH - Split-barrel sampler (S) advanced by combined weight of rods and drive Hammer (H).

SOIL DESCRIPTIONS

All soils have been classified basically in accordance with the Unified Soil Classification System, but this system has been augmented by the use of special adjectives to designate the approximate percentages of minor components, as follows:

Adjective	Percent by Weight
trace	1 to 10
little	11 to 20
some	21 to 35
"and"	36 to 50

The following terms are used to describe density and consistency of soils:

Term (Granular Soils)	Blows per foot (N_{60})
Very-loose	Less than 5
Loose	5 to 10
Medium-dense	11 to 30
Dense	31 to 50
Very-dense	Over 50

Term (Cohesive Soils)	Qu (tsf)
Very-soft	Less than 0.25
Soft	0.25 to 0.5
Medium-stiff	0.5 to 1.0
Stiff	1.0 to 2.0
Very-stiff	2.0 to 4.0
Hard	Over 4.0

EXPLANATION OF SYMBOLS AND TERMS USED ON BORING LOGS FOR SAMPLING AND DESCRIPTION OF ROCK

SAMPLING DATA

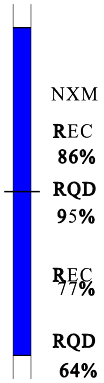

When bedrock is encountered and rock core samples are attempted, the "SAMPLING EFFORT" column is used to record the type of core barrel used (NXM), the percentage of core recovered (REC) for each run of the sampler, and the Rock Quality Designation (RQD) value. Rock-core barrels can be of either single- or double-tube construction, and a special series of double-tube barrels, designated by the suffix M, is commonly used to obtain maximum core recovery in very-soft or fractured rock. Three basic groups of barrels are used most often in subsurface investigations for engineering purposes, and these groups and the diameters of the cores obtained are as follows:

AX, AW, AXM, AWM	-	1-1/8 inches
BX, BW, BXM, BWM	-	1-5/8 inches
NX, NW, NXM, NWM	-	2-1/8 inches

Rock Quality Designation (RQD) is expressed as a percentage and is obtained by summing the total length of all core pieces which are at least 4 inches long and then dividing this sum by the total length of core run. It has been found that there is a reasonably good relationship between the RQD value and the general quality of rock for engineering purposes. This relationship is shown as follows:

RQD - %	General Quality
0 - 25	Very-poor
25 - 50	Poor
50 - 75	Fair
75 - 90	Good
90 - 100	Excellent

ROCK HARDNESS

THE FOLLOWING TERMS ARE USED TO DESCRIBE ROCK HARDNESS:

Term	Meaning	Mohs' Hardness
Very-soft	Rock such as shale can be easily picked apart by the fingers. Sandstone is poorly cemented and very friable. The rock resembles hard clay or dense sand, but has rock structure.	Less than 1
Soft	Rock such as shale, siltstone or limestone can be scratched or powdered by fingernail pressure. Sandstone is mostly poorly cemented, and individual sand grains can be separated from the main rock mass by a fingernail.	1 to 1½
Medium-hard	Rock cannot be scratched by a fingernail, but can be powdered by a knife. Sandstone is mostly well cemented, but individual grains can be removed by scratching with a knife.	2½ to 5½
Hard	Rock is well cemented and cannot be powdered by a knife. Rock can be powdered by a steel file.	5½ to 6½
Very-hard	Rock cannot be scratched by a steel file and the core sample rings when struck with a hammer.	Greater than 6½

LOG OF BORING NO. B-301
DUBLIN BRIDGE STREET CIVIC CORE PROJECT
DUBLIN, OHIO

S&ME

LOCATION: **See Plate 2 of Appendix.** ELEVATION: **810.7** DATE: **7/10/14**

DRILLING METHOD: **3-1/4" I.D. Hollow-stem Auger** COMPLETION DEPTH: **15.0'**

SAMPLER(S): **2" O.D. Split-barrel Sampler**

ELEV.	DEPTH, FEET	SAMPLE NUMBER	SAMPLE	SAMPLE EFFORT	N_{60}	SAMPLE REC-%	DESCRIPTION	TEST RESULTS
810.4	0						TOPSOIL - 4 INCHES	
		1		2/2/3	7	53	FILL: Very-stiff brown silty clay, little fine to coarse sand, trace fine gravel.	H=2.0-3.25
808.1							FILL: Loose brown fine to coarse sand, trace fine gravel "and" silty clay.	
		2		2/3/4	10	60		G
805.2	5							
		3		33/49/35	118	87	POSSIBLE FILL: Very-dense gray fine to coarse gravel, some fine to coarse sand, little silt.	
803.2							Hard gray limestone, massive bedding, highly fractured to 7" core pieces, many diagonal and hortizontal fractures, fossiliferous, partly crystalline structure, stylolitic, iron oxide stains.	
		4		REC 78% RQD 15%				
	10							
		5		REC 94% RQD 52%				
795.7	15						- No seepage encountered. - Encountered augar refusal at 7.5'. - Boring elevation provided by American Structurepoint.	
	20							
	25							

NATURAL CONSISTENCY INDEX — NATURAL MOISTURE CONTENT — PLASTIC LIMIT — LIQUID LIMIT — 10 20 30 40

WATER LEVEL: "Dry"
WATER NOTE: Before Coring
DATE: 7/10/14

SYMBOLS USED TO INDICATE TEST RESULTS

G - Gradation, Q - Uncon Comp, T - Triax Comp, C - Consol. — See Separate Curves

H - Penetrometer (tsf)
W - Unit Dry Wt (pcf)
D - Relative Dens (%)

Drill Rod Energy Ratio : 0.84
Last Calibration Date : 8/2/2013
Drill Rig Number : S&ME
ATV 550X

JOB: 1117-14-012A

2010 NEW DEFAULT BORING LOG-W/ N60

LOG OF BORING NO. B-302
DUBLIN BRIDGE STREET CIVIC CORE PROJECT
DUBLIN, OHIO

S&ME

LOCATION: See Plate 2 of Appendix. ELEVATION: 812.7 DATE: 7/14/14

DRILLING METHOD: 4-1/2" O.D. Continuous-flight Auger COMPLETION DEPTH: 19.9'

SAMPLER(S): 2" O.D. Split-barrel Sampler

ELEV.	DEPTH, FEET	SAMPLE NUMBER	SAMPLE	SAMPLE EFFORT	N_{60}	SAMPLE REC-%	DESCRIPTION	NATURAL CONSISTENCY INDEX / NATURAL MOISTURE CONTENT (PLASTIC LIMIT — LIQUID LIMIT)	TEST RESULTS
812.5	0						TOPSOIL - 2 INCHES	10 20 30 40	
		1		5/17/16	42	40	FILL: Medium-dense to dense gray and brown fine to coarse gravel, little to some fine to coarse sand, little to some silty clay.		
		2		5/7/9	21	67			G
	5								
806.6		3		50-1"R REC 79% RQD 0%		7	Hard gray limestone, massive bedding, fractured to 10" core pieces, many diagonal and horizontal fractures, fossiliferous, partly crystalline structure, stylolitic, slightly vuggy, iron oxide stains.		
		4							
	10			REC 78% RQD 0%			- Encountered several voids during drilling in the upper 3 feet of rock core, totalling approximately 1.5 feet. No water loss was noted during coring.		
		5							
	15			REC 100% RQD 74%					
		6					Qu=13,402.6 psi from 18.2' to 18.7'.		
792.8	20						- No seepage encountered - Encountered auger refusal at 6.4'. - Boring elevation provided by American Structurepoint.		
	25								

2010 NEW DEFAULT BORING LOG-W/ N60

WATER LEVEL: "Dry"
WATER NOTE: Before Coring
DATE: 7/14/2014

SYMBOLS USED TO INDICATE TEST RESULTS

G - Gradation, Q - Uncon Comp, T - Triax Comp, C - Consol. — See Separate Curves

H - Penetrometer (tsf)
W - Unit Dry Wt (pcf)
D - Relative Dens (%)

Drill Rod Energy Ratio : 0.77
Last Calibration Date : 2/19/2013
Drill Rig Number : S&ME Truck D50

JOB: 1117-14-012A

LOG OF BORING NO. B-303
DUBLIN BRIDGE STREET CIVIC CORE PROJECT
DUBLIN, OHIO

S&ME

LOCATION: See Plate 2 of Appendix. ELEVATION: 794.4 DATE: 7/10/14

DRILLING METHOD: 3-1/4" I.D. Hollow-stem Auger COMPLETION DEPTH: 10.2'

SAMPLER(S): 2" O.D. Split-barrel Sampler

ELEV.	DEPTH, FEET	SAMPLE NUMBER	SAMPLE	SAMPLE EFFORT	N_{60}	SAMPLE REC-%	DESCRIPTION	NATURAL CONSISTENCY INDEX / NATURAL MOISTURE CONTENT (PLASTIC LIMIT – LIQUID LIMIT; 10 20 30 40)	TEST RESULTS
794.1	0						TOPSOIL - 4 INCHES		
		1		2/3/3	8	47	FILL: Very-stiff brown and dark-brown silty clay, little fine to coarse sand, trace fine gravel.		H=3.0-3.5
791.4							POSSIBLE FILL: Very-dense light gray fine to coarse gravel "and" fine to coarse sand, little silt.		
		2		17/40/45	119	100			
	5								
		3		25/50-4"R		40			
		4		50-3"R		100			
784.2	10	5		50-2"R		100			
							- No seepage encountered. - Boring elevation provided by American Structurepoint.		
	15								
	20								
	25								

2010 NEW DEFAULT BORING LOG-W/ N60

WATER LEVEL: "Dry"
WATER NOTE: Caved at 8.7'
DATE: 7/10/14

SYMBOLS USED TO INDICATE TEST RESULTS

G - Gradation
Q - Uncon Comp
T - Triax Comp
C - Consol.
(See Separate Curves)

H - Penetrometer (tsf)
W - Unit Dry Wt (pcf)
D - Relative Dens (%)

Drill Rod Energy Ratio : 0.84
Last Calibration Date : 8/2/2013
Drill Rig Number : S&ME ATV 550X

LOG OF BORING NO. B-304
DUBLIN BRIDGE STREET CIVIC CORE PROJECT
DUBLIN, OHIO

S&ME

LOCATION: See Plate 2 of Appendix. ELEVATION: 802.3 DATE: 7/11/14

DRILLING METHOD: 4-1/2" O.D. Continuous-flight Auger COMPLETION DEPTH: 20.0'

SAMPLER(S): 2" O.D. Split-barrel Sampler

ELEV.	DEPTH, FEET	SAMPLE NUMBER	SAMPLE	SAMPLE EFFORT	N_{60}	SAMPLE REC-%	DESCRIPTION	TEST RESULTS
	0						ASPHALT - 12 INCHES	
801.3								
800.8							GRANULAR BASE - 6 INCHES	
		1		3/3/6	13	87	FILL: Very-stiff brown and dark-brown silty clay, some fine to coarse sand, trace fine to coarse gravel.	H=2.0-3.5 G
		2		2/3/5	11	100		H=2.75-3.75
797.3	5						FILL: Very-stiff to hard brown mottled with gray silty clay, some fine to coarse sand, trace fine gravel.	
		3		4/6/7	18	100		H=3.75-4.5 G
		4A		4/13/21	48	100		H=4.0-4.5
792.6	10	4B					Very-dense brown and gray fine to coarse gravel, little fine to coarse sand, little silt, similar to highly weathered limestone.	
		5		50-6"R		100		
		6		50-3"R		100		
	15							
		7		50-2"R		100		
		8		50-1"R		100		
782.3	20							
	25						- No seepage encountered. - Boring elevation provided by American Structurepoint.	

NATURAL CONSISTENCY INDEX
NATURAL MOISTURE CONTENT
PLASTIC LIMIT — LIQUID LIMIT
10 20 30 40

2010 NEW DEFAULT BORING LOG-W/ N60

WATER LEVEL: "Dry"
WATER NOTE:
DATE: 7/11/14

SYMBOLS USED TO INDICATE TEST RESULTS
G - Gradation
Q - Uncon Comp
T - Triax Comp
C - Consol.
See Separate Curves
H - Penetrometer (tsf)
W - Unit Dry Wt (pcf)
D - Relative Dens (%)

Drill Rod Energy Ratio : 0.84
Last Calibration Date : 8/2/2013
Drill Rig Number : S&ME ATV 550X

JOB: 1117-14-012A

LOG OF BORING NO. B-305
DUBLIN BRIDGE STREET CIVIC CORE PROJECT
DUBLIN, OHIO

S&ME

LOCATION: See Plate 2 of Appendix. ELEVATION: 779.7 DATE: 7/11/14

DRILLING METHOD: 4-1/2" O.D. Continuous-flight Auger COMPLETION DEPTH: 7.7'

SAMPLER(S): 2" O.D. Split-barrel Sampler

ELEV.	DEPTH, FEET	SAMPLE NUMBER	SAMPLE	SAMPLE EFFORT	N_{60}	SAMPLE REC-%	DESCRIPTION	NATURAL CONSISTENCY INDEX / NATURAL MOISTURE CONTENT (PLASTIC LIMIT — LIQUID LIMIT; 10 20 30 40)	TEST RESULTS
779.0	0						ASPHALT - 8 INCHES		
778.2							GRANULAR BASE - 10 INCHES		
		1		6 / 7 / 8	21	67	FILL: Very-stiff to hard dark-brown and gray silty clay, some fine to coarse sand, trace to little fine to coarse gravel.		H=3.5-4.25
		2		5 / 3 / 4	10	67			H=2.0-2.5 G
774.7	5	3		3 / 6 / 9	21	67	Medium-dense brown and gray fine to coarse gravel, some fine to coarse sand, little silty clay.		
		4		4 / 9 / 9	25	33			
772.0							- No seepage encountered. - Encountered auger refusal at 7.7'. - Boring elevation provided by American Structurepoint.		
	10								
	15								
	20								
	25								

2010 NEW DEFAULT BORING LOG-W/ N60

WATER LEVEL: "Dry"
WATER NOTE:
DATE: 7/11/2014

SYMBOLS USED TO INDICATE TEST RESULTS

G - Gradation
Q - Uncon Comp
T - Triax Comp
C - Consol.
See Separate Curves

H - Penetrometer (tsf)
W - Unit Dry Wt (pcf)
D - Relative Dens (%)

Drill Rod Energy Ratio : 0.84
Last Calibration Date : 8/2/2013
Drill Rig Number : S&ME ATV 550X

JOB: 1117-14-012A

LOG OF BORING NO. B-306
DUBLIN BRIDGE STREET CIVIC CORE PROJECT
DUBLIN, OHIO

S&ME

LOCATION: See Plate 2 of Appendix. ELEVATION: 794.3 DATE: 7/11/14

DRILLING METHOD: 4-1/2" O.D. Continuous-flight Auger COMPLETION DEPTH: 8.8'

SAMPLER(S): 2" O.D. Split-barrel Sampler

ELEV.	DEPTH, FEET	SAMPLE NUMBER	SAMPLE	SAMPLE EFFORT	N_{60}	SAMPLE REC-%	DESCRIPTION	NATURAL CONSISTENCY INDEX / NATURAL MOISTURE CONTENT (PLASTIC LIMIT — LIQUID LIMIT)	TEST RESULTS
793.6	0						ASPHALT - 7 INCHES	10 20 30 40	
793.1							GRANULAR BASE - 5 INCHES		
		1	■	6/50-6"R		67	Very-dense brown fine to coarse gravel, some fine to coarse sand, some silty clay.		
790.8							Very-dense light-brown fine to coarse gravel, "and" fine to coarse sand, little silt, trace clay.		
		2	■	28/14/50-5"R		100		●	G
	5	3	▬	50-1"R		13			
787.8							Very-dense light-brown fine to coarse sand, little fine gravel, little silt.		
		4	■	50-3"R		20			
785.5		5	■	50-3"R		20			
	10						- No seepage encountered. - Boring elevation provided by American Structurepoint.		
	15								
	20								
	25								

2010 NEW DEFAULT BORING LOG-W/ N60

WATER LEVEL: ▽ "Dry" ▼
WATER NOTE:
DATE: 7/11/14

SYMBOLS USED TO INDICATE TEST RESULTS

G - Gradation Q - Uncon Comp T - Triax Comp C - Consol.	See Separate Curves	H - Penetrometer (tsf) W - Unit Dry Wt (pcf) D - Relative Dens (%)

Drill Rod Energy Ratio : 0.84
Last Calibration Date : 8/2/2013
Drill Rig Number : S&ME ATV 550X

JOB: 1117-14-012A

LOG OF BORING NO. B-307
DUBLIN BRIDGE STREET CIVIC CORE PROJECT
DUBLIN, OHIO

S&ME

LOCATION: **See Plate 2 of Appendix.** ELEVATION: **779.2** DATE: **10/22/14**

DRILLING METHOD: **4-1/4" I.D. Hollow-stem Auger** COMPLETION DEPTH: **12.0'**

SAMPLER(S): **2" O.D. Split-barrel Sampler**

ELEV.	DEPTH, FEET	SAMPLE NUMBER	SAMPLE	SAMPLE EFFORT	N_{60}	SAMPLE REC-%	DESCRIPTION	NATURAL CONSISTENCY INDEX / NATURAL MOISTURE CONTENT (PLASTIC LIMIT — LIQUID LIMIT; 10 20 30 40)	TEST RESULTS
	0						TOPSOIL - 8 INCHES		
778.4									
		1		4 / 9 / 8	28	60	POSSIBLE FILL: Very-stiff becoming soft brown mottled with gray silty clay, some fine to coarse sand, trace fine gravel, contains few roots.		H=2.75-3.75
		2		2 / 2 / 1	5	27			
	5								
773.7									
772.9		3		50-3"R		100	Gray fine to coarse gravel, some fine to coarse sand, little silt, similar to weathered limestone.		
		4		REC 100% RQD 41% REC 100% RQD 55%			Hard gray limestone, massive bedding, 1- to 12-inch core pieces, many horizontal and diagonal fractures, partially brecciated, fossiliferous, iron oxide stains at 11.5'. Qu = 13,961 psi from 8.8' to 9.3'.		
	10	5							
767.2									
	15						- Encountered seepage at 5.0'. - Encountered auger refusal at 6.3'. - Elevation estimated from available topographic mapping and should be considered approximate.		
	20								
	25								

2010 NEW DEFAULT BORING LOG-W/ N60

WATER LEVEL: **"Dry"**
WATER NOTE: **Before Coring**
DATE: **10/22/2014**

SYMBOLS USED TO INDICATE TEST RESULTS

G - Gradation, Q - Uncon Comp, T - Triax Comp, C - Consol. — See Separate Curves

H - Penetrometer (tsf)
W - Unit Dry Wt (pcf)
D - Relative Dens (%)

Drill Rod Energy Ratio : 1.0
Last Calibration Date : N/A
Drill Rig Number : PennDrill
Acker ATV

JOB: 1117-14-012A

SUMMARY OF LABORATORY TEST RESULTS

BORING	G'int Id.	MC	LL	PL	PI	GRADATION			COMPACTION		TRIAXIAL					DIRECT SHEAR			UNCONFIN COMPRESS	CONSOLID.	SPECIFIC GRAVITY	UNIT WEIGHT DRY	REMOLDED	PERMEABILITY				RELATIVE DENSITY	LOI	ROCK CORE	SHELBY TUBE	Slake Index
						sieve	Hydrometer short	Hydrometer long	standard	modified	unconsol. undrain	consolid undrain	w/ pores	drained	drained	undrain	residual							cohesive	non/cohes	rigid wall	flexible wall					
		%	%	%	%	* SEE INDIVIDUAL TEST CURVES																PCF						%	%			
B-301	**4.25**	**13.7**	**38**	**16**	**22**	*	*																									
B-301	**11.25**																													*		
B-302	**4.25**	**8.3**	**30**	**18**	**12**	*	*																									
B-302	**18.50**																	*												*		
B-304	**2.25**	**16.0**	**32**	**16**	**16**	*	*																									
B-304	**6.75**	**19.0**	**38**	**17**	**21**	*	*																									
B-305	**3.75**	**19.7**	**40**	**18**	**22**	*	*																									
B-306	**4.75**	**5.5**	**NP**	**NP**	**NP**	*	*																									

SUM REG

S&ME

TESTING SUMMARY - STANDARD

PROJECT DUBLIN BRIDGE STREET CIVIC CORE PROJECT
LOCATION DUBLIN, OHIO
JOB NO. 1117-14-012A DATE 10/28/14

ATTERBERG LIMITS' RESULTS - ASTM D4318

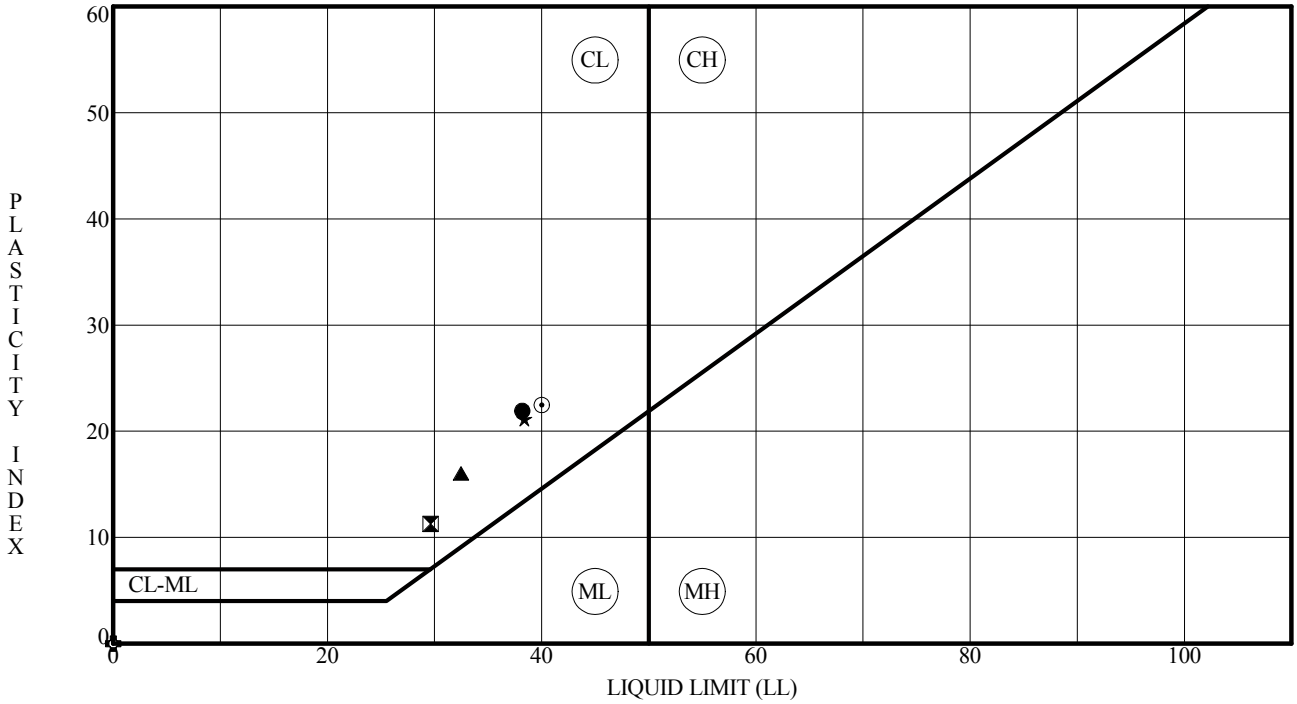

	Specimen Id.	Depth	MC	LL	PL	PI	Fines	ASTM Classification
●	B-301	4.25	14	38	16	22	46.6	CLAYEY SAND SC
⧗	B-302	4.25	8	30	18	12	29.9	CLAYEY GRAVEL with SAND GC
▲	B-304	2.25	16	32	16	16	62.4	SANDY LEAN CLAY CL
★	B-304	6.75	19	38	17	21	72.0	LEAN CLAY with SAND CL
⊙	B-305	3.75	20	40	18	22	69.4	SANDY LEAN CLAY CL
✿	B-306	4.75	6	NP	NP	NP	17.9	SILTY GRAVEL with SAND GM

PROJECT DUBLIN BRIDGE STREET CIVIC CORE PROJECT
LOCATION DUBLIN, OHIO
JOB NO. 1117-14-012A DATE 10/28/14

ALPI-REG

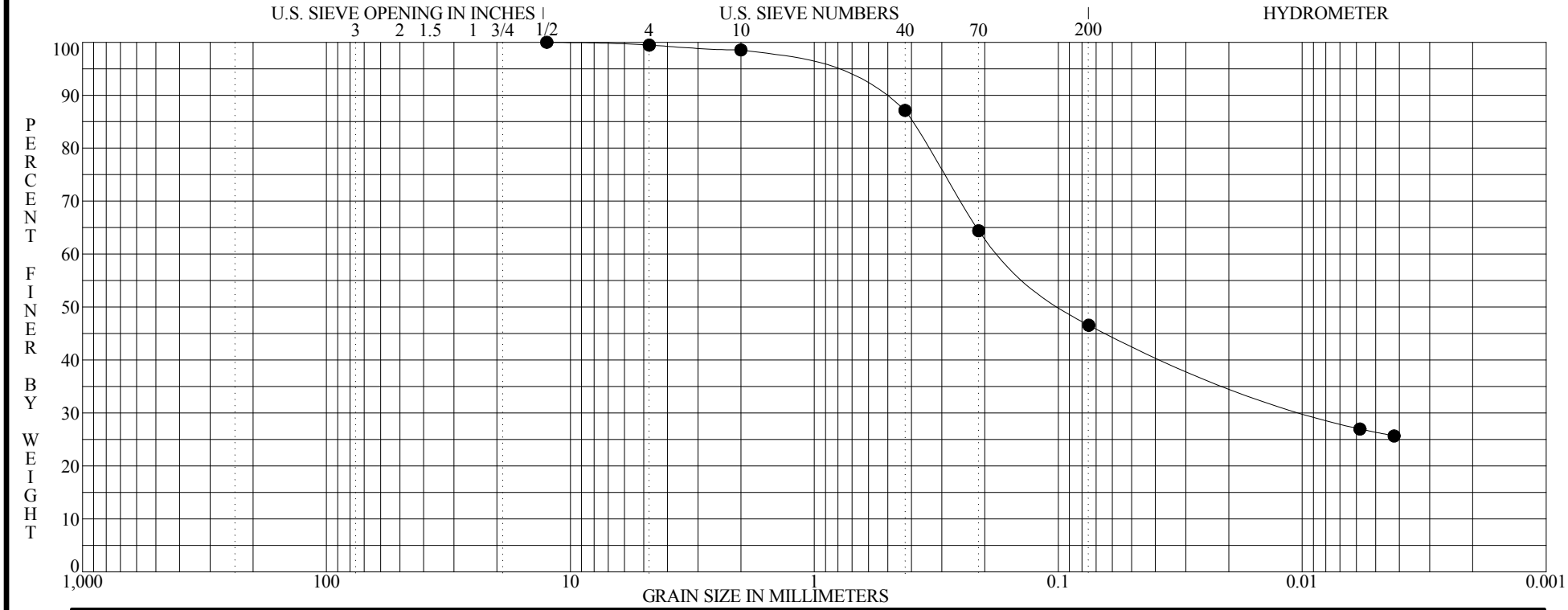

BOULDERS	COBBLES	GRAVEL		SAND			SILT OR CLAY
		coarse	fine	coarse	medium	fine	

	Specimen Identification - Depth	Classification	MC%	LL	PL	PI	Cc	Cu
●	**B-301 S-2 3.5' to 4.4'**	**Brown fine to coarse sand, trace fine gravel, "and" silty clay.**	**14**	**38**	**16**	**22**		

	Specimen Identification - Depth	D100	D95	D60	D50	D10	%Gravel	%Sand	%Silt	%Clay
●	**B-301 S-2 3.5' to 4.4'**	**12.5000**	**1.2342**	**0.1639**	**0.0916**		**0.5**	**52.9**	**20.2**	**26.4**

ASTM D422

GRADATION CURVE

PROJECT DUBLIN BRIDGE STREET CIVIC CORE PROJECT
LOCATION DUBLIN, OHIO
JOB NO. 1117-14-012A **DATE** 10/28/14

GRN-REG

PLATE 14

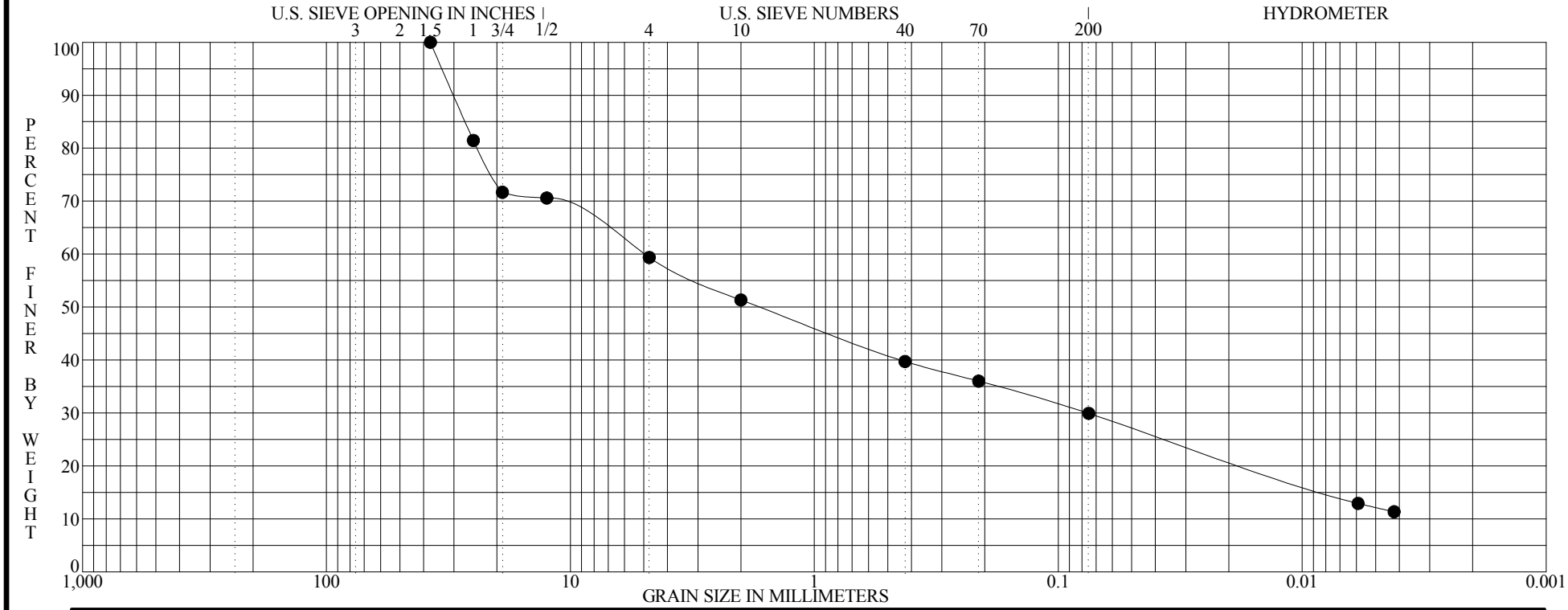

BOULDERS	COBBLES	GRAVEL		SAND			SILT OR CLAY
		coarse	fine	coarse	medium	fine	

	Specimen Identification - Depth	Classification	MC%	LL	PL	PI	Cc	Cu
●	**B-302 S-2 3.5' to 4.5'**	**Gray and brown fine to coarse gravel, some fine to coarse sand, some silty clay.**	**8**	**30**	**18**	**12**		

	Specimen Identification - Depth	D100	D95	D60	D50	D10	%Gravel	%Sand	%Silt	%Clay
●	**B-302 S-2 3.5' to 4.5'**	**37.5000**	**33.6148**	**5.0147**	**1.6734**		**40.6**	**29.4**	**17.8**	**12.2**

ASTM D422

GRADATION CURVE

PROJECT DUBLIN BRIDGE STREET CIVIC CORE PROJECT
LOCATION DUBLIN, OHIO
JOB NO. 1117-14-012A **DATE** 10/28/14

GRN-REG

PLATE 15

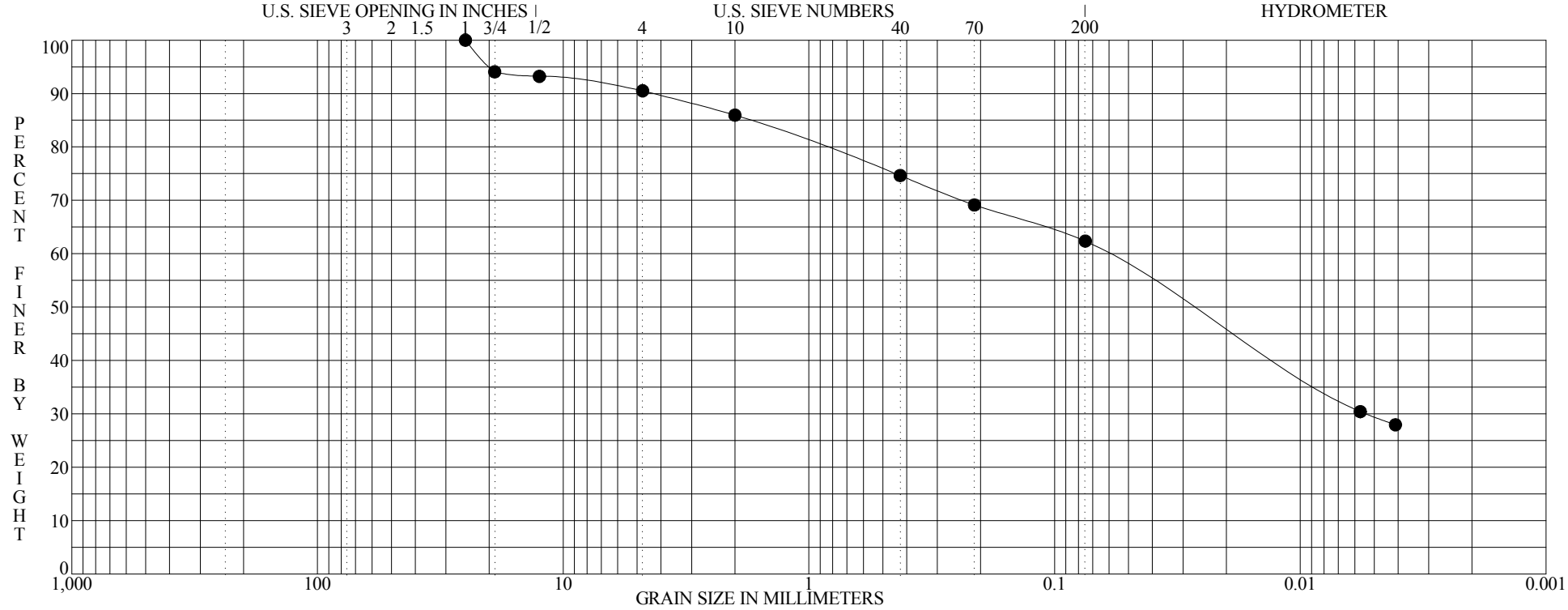

BOULDERS	COBBLES	GRAVEL		SAND			SILT OR CLAY
		coarse	fine	coarse	medium	fine	

	Specimen Identification - Depth	Classification	MC%	LL	PL	PI	Cc	Cu
●	**B-304 S-1 1.5' to 2.8'**	**Brown and dark-brown silty clay, some fine to coarse sand, trace fine to coarse gravel.**	**16**	**32**	**16**	**16**		

	Specimen Identification - Depth	D100	D95	D60	D50	D10	%Gravel	%Sand	%Silt	%Clay
●	**B-304 S-1 1.5' to 2.8'**	**25.0000**	**19.8374**	**0.0620**	**0.0277**		**9.5**	**28.2**	**32.9**	**29.4**

ASTM D422

GRADATION CURVE

PROJECT DUBLIN BRIDGE STREET CIVIC CORE PROJECT
LOCATION DUBLIN, OHIO
JOB NO. 1117-14-012A **DATE** 10/28/14

GRN-REG

PLATE 16

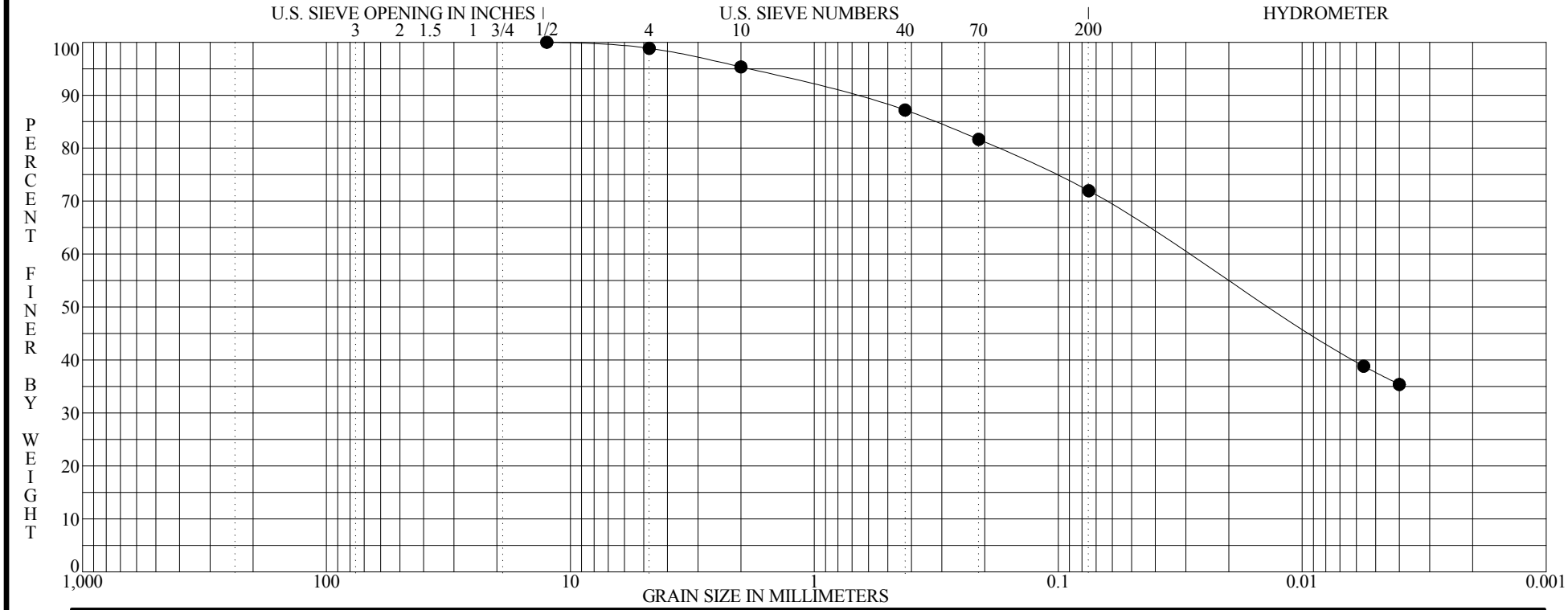

BOULDERS	COBBLES	GRAVEL		SAND			SILT OR CLAY
		coarse	fine	coarse	medium	fine	

	Specimen Identification - Depth	Classification	MC%	LL	PL	PI	Cc	Cu
●	**B-304 S-3 6.0' to 7.5'**	**Brown mottled with gray silty clay, some fine to coarse sand, trace fine gravel.**	**19**	**38**	**17**	**21**		

	Specimen Identification - Depth	D100	D95	D60	D50	D10	%Gravel	%Sand	%Silt	%Clay
●	**B-304 S-3 6.0' to 7.5'**	**12.5000**	**1.8728**	**0.0294**	**0.0134**		**1.1**	**26.9**	**34.3**	**37.7**

ASTM D422

GRADATION CURVE

PROJECT DUBLIN BRIDGE STREET CIVIC CORE PROJECT
LOCATION DUBLIN, OHIO
JOB NO. 1117-14-012A **DATE** 10/28/14

GRN-REG

PLATE 17

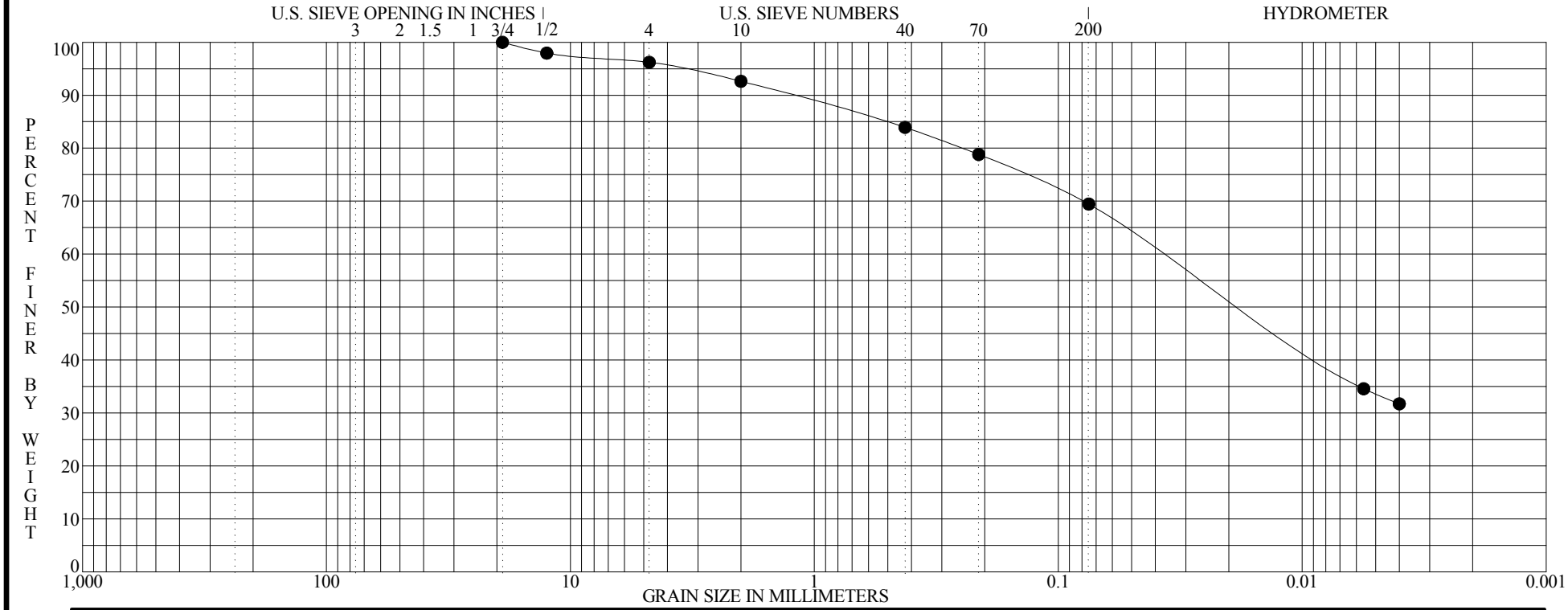

BOULDERS	COBBLES	GRAVEL		SAND			SILT OR CLAY
		coarse	fine	coarse	medium	fine	

	Specimen Identification - Depth	Classification	MC%	LL	PL	PI	Cc	Cu
●	**B-305 S-2 3.0' to 4.0'**	**Dark-brown and gray silty clay, some fine to coarse sand, trace fine gravel.**	**20**	**40**	**18**	**22**		

	Specimen Identification - Depth	D100	D95	D60	D50	D10	%Gravel	%Sand	%Silt	%Clay
●	**B-305 S-2 3.0' to 4.0'**	**19.0000**	**3.5374**	**0.0371**	**0.0176**		**3.8**	**26.8**	**35.8**	**33.6**

ASTM D422

GRADATION CURVE

PROJECT DUBLIN BRIDGE STREET CIVIC CORE PROJECT
LOCATION DUBLIN, OHIO
JOB NO. 1117-14-012A **DATE** 10/28/14

GRN-REG

PLATE 18

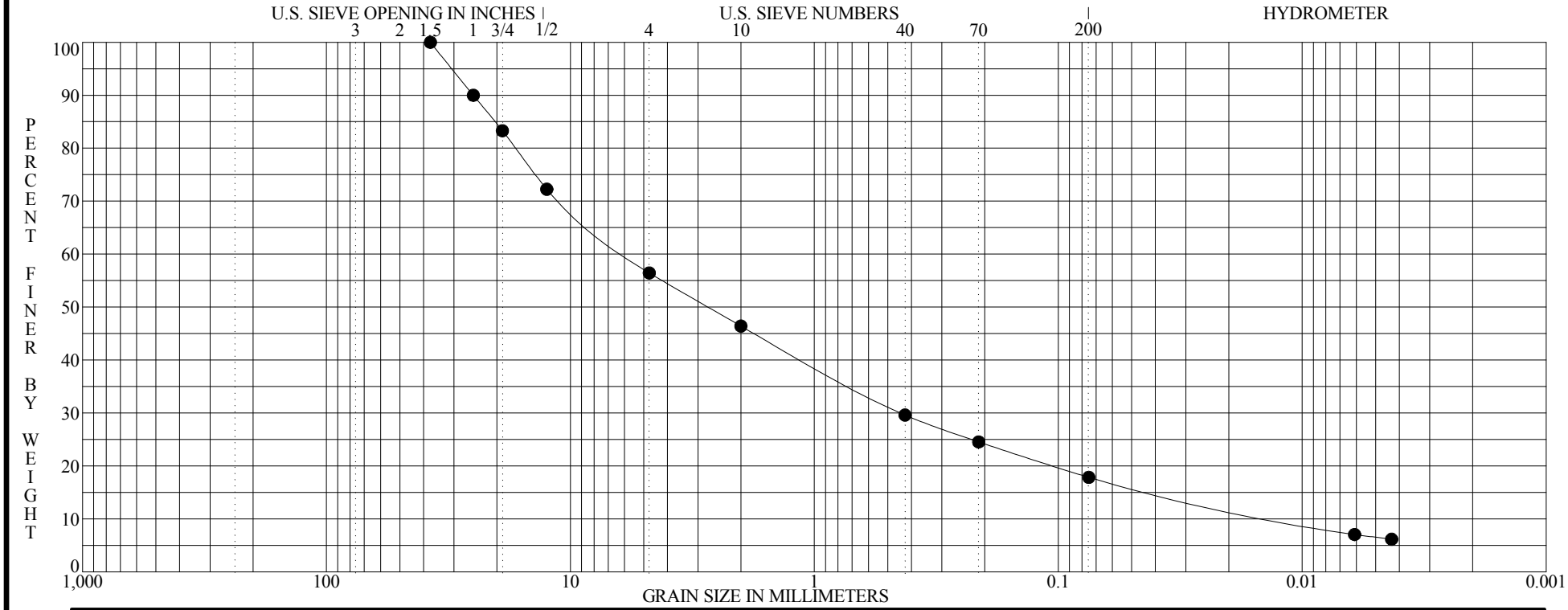

BOULDERS	COBBLES	GRAVEL		SAND			SILT OR CLAY
		coarse	fine	coarse	medium	fine	

	Specimen Identification - Depth	Classification	MC%	LL	PL	PI	Cc	Cu
●	**B-306 S-2 4.0' to 5.5'**	**Light-brown fine to coarse gravel, "and" fine to coarse sand, little silt, trace clay.**	**6**	**NP**	**NP**	**NP**	**2.714**	**488.363**

	Specimen Identification - Depth	D100	D95	D60	D50	D10	%Gravel	%Sand	%Silt	%Clay
●	**B-306 S-2 4.0' to 5.5'**	**37.5000**	**30.6262**	**5.9067**	**2.7257**	**0.0121**	**43.6**	**38.6**	**11.3**	**6.5**

ASTM D422

GRADATION CURVE

PROJECT DUBLIN BRIDGE STREET CIVIC CORE PROJECT
LOCATION DUBLIN, OHIO
JOB NO. 1117-14-012A **DATE** 10/28/14

GRN-REG

PLATE 19

UNCONFINED COMPRESSION TEST

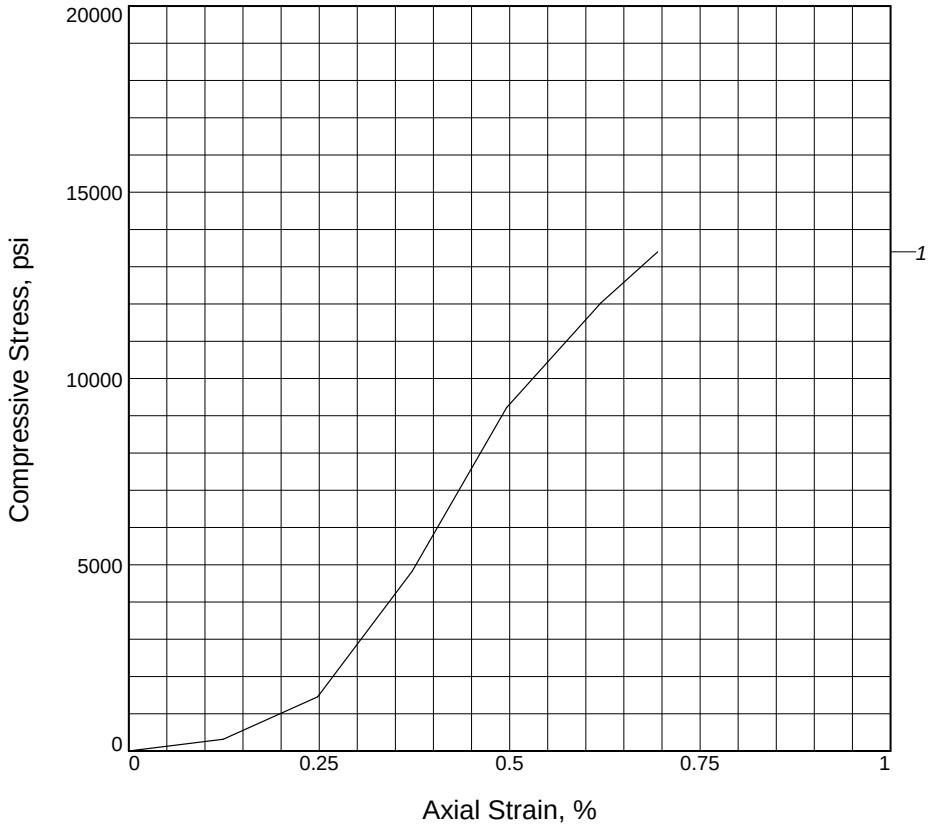

Sample No.	1			
Unconfined strength, psi	13402.59			
Undrained shear strength, psi	6701.30			
Failure strain, %	0.7			
Strain rate, in./min.	N/A			
Water content, %	0.2			
Wet density, pcf	166.4			
Dry density, pcf	166.1			
Saturation, %	33.8			
Void ratio	0.0147			
Specimen diameter, in.	1.99			
Specimen height, in.	4.03			
Height/diameter ratio	2.03			

Description: LIMESTONE, gray

LL =	**PL =**	**PI =**	**Assumed GS=** 2.7	**Type:** Rock Core

Project No.: 1117-14-012A

Date Sampled: 7/29/2014

Remarks:

Client: ASP

Project: Dublin Bridge Street Civic Core Project
SR 161 and Riverside Drive

Location: B-302

Sample Number: NQ-6 **Depth:** 18.2' to 18.7'

UNCONFINED COMPRESSION TEST
S&ME, Inc.
Dublin, Ohio

Plate 19

Tested By: CBP **Checked By:** PJM

UNCONFINED COMPRESSION TEST

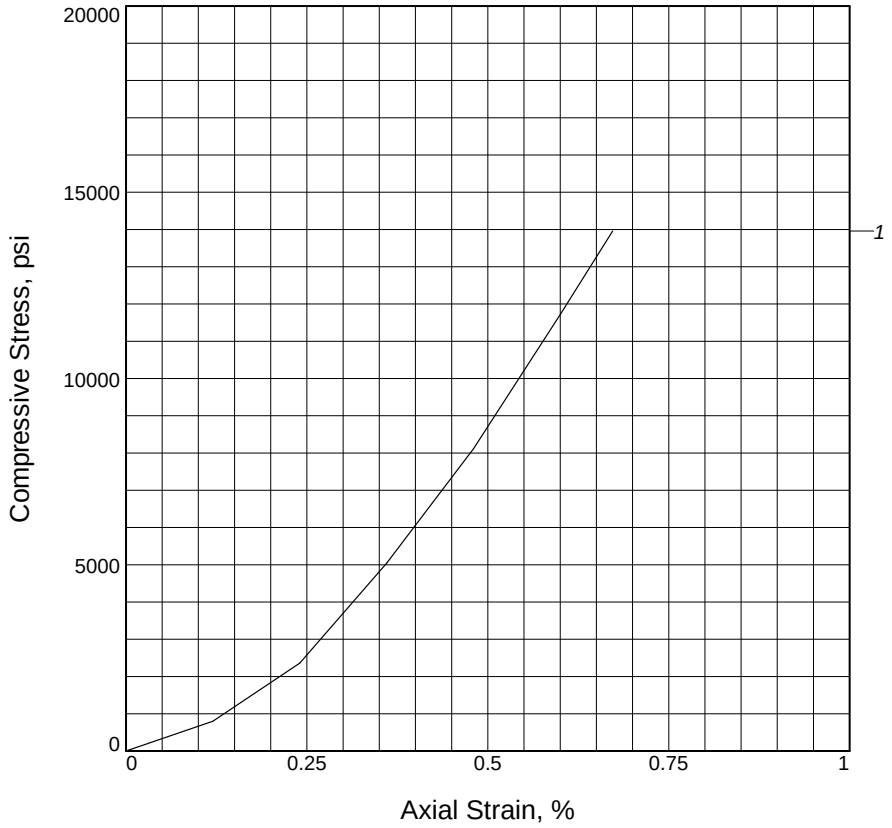

Sample No.	1			
Unconfined strength, psi	13961.27			
Undrained shear strength, psi	6980.63			
Failure strain, %	0.7			
Strain rate, in./min.	N/A			
Water content, %	2.1			
Wet density, pcf	162.5			
Dry density, pcf	159.2			
Saturation, %	96.2			
Void ratio	0.0587			
Specimen diameter, in.	1.97			
Specimen height, in.	4.16			
Height/diameter ratio	2.11			

Description: LIMESTONE, gray

LL =	**PL =**	**PI =**	**Assumed GS=** 2.7	**Type:** Rock Core

Project No.: 1117-14-012A

Date Sampled: 10/28/2014

Remarks:

Figure 1

Client:

Project: Dublin St. Bridge/SR 161/Riverside Dr. Roundabout
Columbus, Ohio

Location: B-307

Sample Number: NQ-5 **Depth:** 8.8' to 9.3'

UNCONFINED COMPRESSION TEST
S&ME, Inc.
Dublin, Ohio

Tested By: CBP **Checked By:** PJM

1 Photograph of B-301 bedrock core from 7.5' to 15.0'

2 Photograph of B-302 bedrock core from 6.4' to 16.9'

3 Photograph of B-302 bedrock core from 16.9' to 19.9'

4 Photograph of B-307 bedrock core from 6.3' to 12.0'

PLATE 22

S&ME	Dublin Bridge St. Civic Core Project Dublin, Ohio	S&ME Project :1117-14-012A/B	
		Taken by: PJM	Date Taken: 7/17, 10/27/14

APPENDIX B

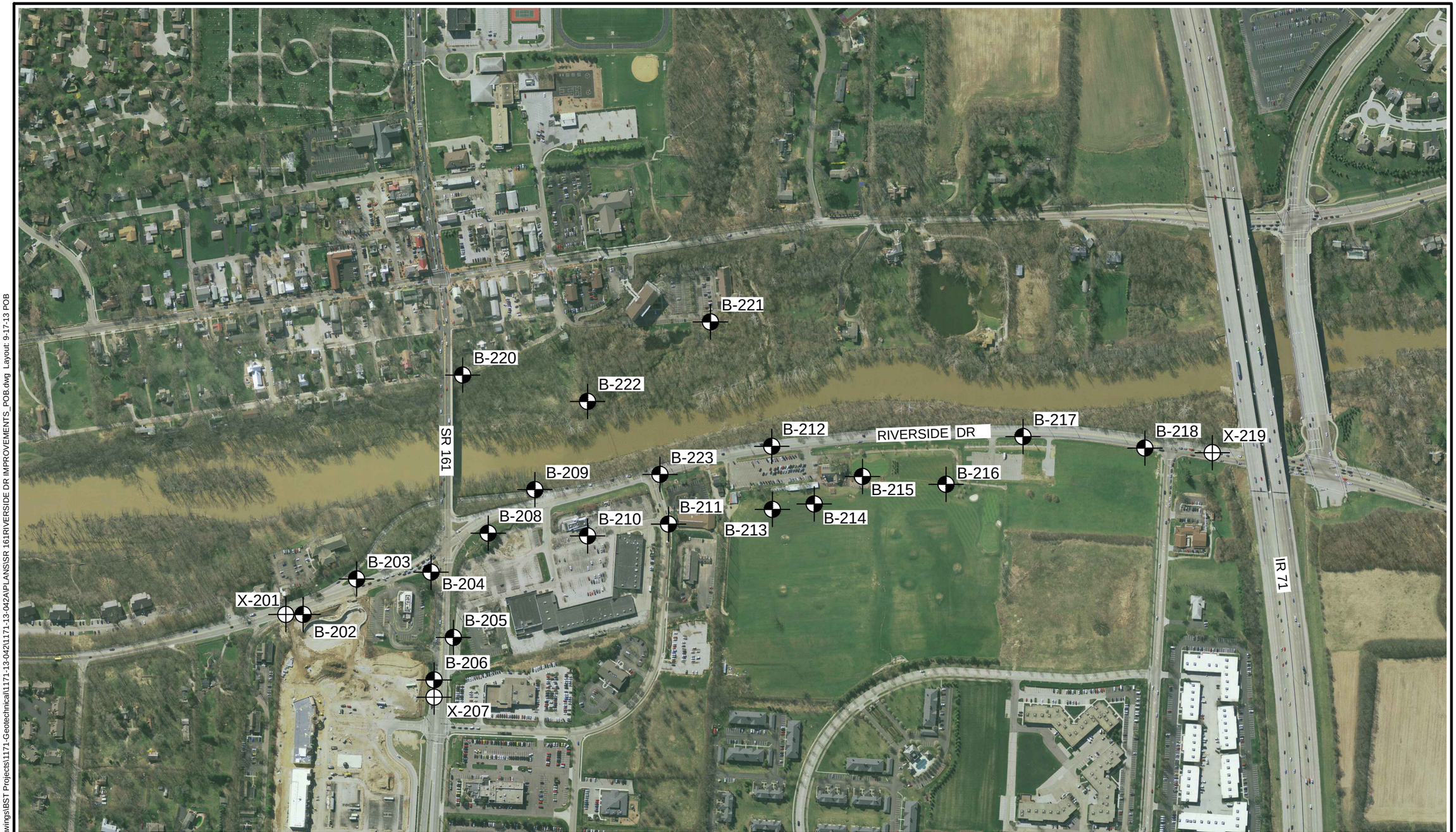

0 400 800

SCALE INFEET

PAVEMENT CORE X-212 PERFORMED IN COMBINATION WITH BORING B-212

LEGEND

B-1 BORING NUMBER AND LOCATION

X-1 PAVEMENT CORE NUMBER AND LOCATION

PLAN OF BORINGS

SR 161/RIVERSIDE DR. IMPROVEMENTS
DUBLIN, OHIO

Project: 1171-13-042A	Drawn By: PRR	
Drawing Date: 9-17-2013	Approved By: WML	
Last Updated: 11-11-2013	Scale: GRAPHIC	1:1

S&ME
WWW.SMEINC.COM
ENGINEERING FIRM. 03530

PLATE 2

Images: ~Riverside Drive Aerial.jp2 ~TOPOImap.JPG
Xrefs:
File Last Updated: Nov 11, 2013
Plot Info: 11-11-2013 @ 11:03am By: prock
S&ME Filename: I:\DEPTS\cadd\Drawings\BST Projects\1171-Geotechnical\1171-13-042\1171-13-042A\PLANS\SR 161RIVERSIDE DR IMPROVEMENTS_POB.dwg Layout: 9-17-13 POB

LOG OF BORING NO. B-202
SR161/RIVERSIDE DRIVE IMPROVEMENTS
DUBLIN, OHIO

S&ME

LOCATION: **See Plate 2 of Appendix.** ELEVATION: **793 ±** DATE: **9/9/13**

DRILLING METHOD: **4-1/2" O.D. Continuous-flight Auger** COMPLETION DEPTH: **6.9'**

SAMPLER(S): **2" O.D. Split-barrel Sampler**

ELEV.	DEPTH, FEET	SAMPLE NUMBER	SAMPLE	SAMPLE EFFORT	N_{60}	SAMPLE REC-%	DESCRIPTION	NATURAL CONSISTENCY INDEX / NATURAL MOISTURE CONTENT (PLASTIC LIMIT — LIQUID LIMIT; 10 20 30 40)	TEST RESULTS
	0						ASPHALT - 11 INCHES		
792.1									
791.5							GRANULAR BASE - 6 INCHES		
790.5		1		7 / 4 / 4	10	40	Stiff gray mottled with brown silty clay, some fine to coarse sand, some fine to coarse gravel.		H=1.0-2.0 G
789.6				4			Very-stiff gray silty clay, trace fine to coarse sand.		
		2		5 / 7	15	67	Very-stiff brown silty clay, trace to little fine to coarse sand, trace fine to coarse gravel.		H=2.0-2.5
	5	3		3 / 5 / 6	14	60			H=2.0
786.5		4		10 / 50-5"R					
786.1							Very-dense gray fine to coarse gravel, some fine to coarse sand, trace silt (weathered limestone).		
	10						- No seepage encountered. - Encountered auger refusal on limestone bedrock at 6.9'. - Boring located using field pacing and taping methods and should be considered approximate. - Elevations estimated from Google Earth® and should be considered approximate.		
	15								
	20								
	25								

2010 NEW DEFAULT BORING LOG-W/ N60

WATER LEVEL: "Dry"
WATER NOTE: At Completion
DATE: 9/9/13

SYMBOLS USED TO INDICATE TEST RESULTS

G - Gradation
Q - Uncon Comp
T - Triax Comp
C - Consol.
(See Separate Curves)

H - Penetrometer (tsf)
W - Unit Dry Wt (pcf)
D - Relative Dens (%)

Drill Rod Energy Ratio : .76
Last Calibration Date : 02/19/13
Drill Rig Number : Truck 55(AW)

JOB: 1171-13-042A

LOG OF BORING NO. B-203
SR161/RIVERSIDE DRIVE IMPROVEMENTS
DUBLIN, OHIO

S&ME

LOCATION: **See Plate 2 of Appendix.** ELEVATION: **793 ±** DATE: **9/11/13**

DRILLING METHOD: **4-1/2" O.D. Continuous-flight Auger** COMPLETION DEPTH: **4.0'**

SAMPLER(S): **2" O.D. Split-barrel Sampler**

ELEV.	DEPTH, FEET	SAMPLE NUMBER	SAMPLE	SAMPLE EFFORT	N_{60}	SAMPLE REC-%	DESCRIPTION	NATURAL CONSISTENCY INDEX / NATURAL MOISTURE CONTENT (PLASTIC LIMIT – LIQUID LIMIT; 10 20 30 40)	TEST RESULTS
792.8	0						TOPSOIL - 2 INCHES		
		1		11/4/6	13	100	Medium-dense gray and brown fine to coarse gravel, some fine to coarse sand, some to "and" silty clay.		
		2		6/9/11	25	33			G
789.0		3		50-0"R					
	5						- No seepage encountered. - Encountered auger refusal on limestone bedrock at 4.0'. - Boring located using field pacing and taping methods and should be considered approximate. - Elevations estimated from Google Earth® and should be considered approximate.		
	10								
	15								
	20								
	25								

2010 NEW DEFAULT BORING LOG-W/ N60

WATER LEVEL: "Dry"
WATER NOTE: At Completion
DATE: 9/11/13

SYMBOLS USED TO INDICATE TEST RESULTS

G - Gradation
Q - Uncon Comp
T - Triax Comp
C - Consol.
(See Separate Curves)

H - Penetrometer (tsf)
W - Unit Dry Wt (pcf)
D - Relative Dens (%)

Drill Rod Energy Ratio : .75
Last Calibration Date : 02/20/13
Drill Rig Number : S&ME 550(AW)

JOB: 1171-13-042A

LOG OF BORING NO. B-204
SR161/RIVERSIDE DRIVE IMPROVEMENTS
DUBLIN, OHIO

S&ME

LOCATION: **See Plate 2 of Appendix.** ELEVATION: **798 ±** DATE: **9/11/13**

DRILLING METHOD: **4-1/2" O.D. Continuous-flight Auger** COMPLETION DEPTH: **7.2'**

SAMPLER(S): **2" O.D. Split-barrel Sampler**

ELEV.	DEPTH, FEET	SAMPLE NUMBER	SAMPLE	SAMPLE EFFORT	N_{60}	SAMPLE REC-%	DESCRIPTION	NATURAL CONSISTENCY INDEX / NATURAL MOISTURE CONTENT / PLASTIC LIMIT / LIQUID LIMIT (10 20 30 40)	TEST RESULTS
797.6	0						TOPSOIL - 4 INCHES		
		1		10 / 9 / 7	20	67	Medium-dense gray and brown fine to coarse gravel, some fine to coarse sand, little to some clayey silt.		
		2		2 / 4 / 5	11	67			G
	5	3		5 / 4 / 5	11	100			
		4		5 / 7 / 50-4"R		100			
790.8							- No seepage encountered. - Encountered auger refusal on limestone bedrock at 7.2'. - Boring located using field pacing and taping methods and should be considered approximate. - Elevations estimated from available topographic mapping and should be considered approximate.		
	10								
	15								
	20								
	25								

2010 NEW DEFAULT BORING LOG-W/ N60

WATER LEVEL: "Dry"
WATER NOTE: At Completion
DATE: 9/11/13

SYMBOLS USED TO INDICATE TEST RESULTS

G - Gradation
Q - Uncon Comp
T - Triax Comp
C - Consol.
(See Separate Curves)

H - Penetrometer (tsf)
W - Unit Dry Wt (pcf)
D - Relative Dens (%)

Drill Rod Energy Ratio : .75
Last Calibration Date : 02/20/13
Drill Rig Number : S&ME 550(AW)

JOB: 1171-13-042A

LOG OF BORING NO. B-205
SR161/RIVERSIDE DRIVE IMPROVEMENTS
DUBLIN, OHIO

S&ME

LOCATION: See Plate 2 of Appendix. ELEVATION: 809.6 DATE: 9/11/13

DRILLING METHOD: 4-1/2" O.D. Continuous-flight Auger COMPLETION DEPTH: 7.5'

SAMPLER(S): 2" O.D. Split-barrel Sampler

ELEV.	DEPTH, FEET	SAMPLE NUMBER	SAMPLE	SAMPLE EFFORT	N_{60}	SAMPLE REC-%	DESCRIPTION	NATURAL CONSISTENCY INDEX / NATURAL MOISTURE CONTENT / PLASTIC LIMIT / LIQUID LIMIT (10 20 30 40)	TEST RESULTS
809.2	0						ASPHALT - 5 INCHES		
808.7							GRANULAR BASE - 6 INCHES		
		1		6 / 7 / 9	20	100	Medium-dense gray and brown fine to coarse gravel, some fine to coarse sand, some silty clay.		G
805.6		2		8 / 7 / 6	16	67			
804.1	5	3		4 / 3 / 5	10	100	Loose gray fine to coarse gravel, some fine to coarse sand, "and" silty clay.		
802.1		4		3 / 4 / 5	11	67	Medium-stiff to stiff brown silty clay, little fine to coarse sand, trace fine gravel.		H=0.5-1.5
	10						- No seepage encountered. - Boring located using field pacing and taping methods and should be considered approximate. - Boring elevation provided by EMH&T.		
	15								
	20								
	25								

2010 NEW DEFAULT BORING LOG-W/ N60

WATER LEVEL: "Dry"
WATER NOTE: At Completion
DATE: 9/11/13

SYMBOLS USED TO INDICATE TEST RESULTS

G - Gradation, Q - Uncon Comp, T - Triax Comp, C - Consol. — See Separate Curves

H - Penetrometer (tsf)
W - Unit Dry Wt (pcf)
D - Relative Dens (%)

Drill Rod Energy Ratio : .75
Last Calibration Date : 02/20/13
Drill Rig Number : S&ME 550(AW)

JOB: 1171-13-042A

LOG OF BORING NO. B-206
SR161/RIVERSIDE DRIVE IMPROVEMENTS
DUBLIN, OHIO

S&ME

LOCATION: **See Plate 2 of Appendix.** ELEVATION: **819 ±** DATE: **9/9/13**

DRILLING METHOD: **4-1/2" O.D. Continuous-flight Auger** COMPLETION DEPTH: **2.2'**

SAMPLER(S): **2" O.D. Split-barrel Sampler**

ELEV.	DEPTH, FEET	SAMPLE NUMBER	SAMPLE	SAMPLE EFFORT	N_{60}	SAMPLE REC-%	DESCRIPTION	NATURAL CONSISTENCY INDEX / NATURAL MOISTURE CONTENT (PLASTIC LIMIT — LIQUID LIMIT; 10 20 30 40)	TEST RESULTS
	0						ASPHALT - 13 INCHES		
817.9									
817.5							GRANULAR BASE - 5 INCHES		
817.0		1	■	4 / 50-2"R		47	Very-stiff brown mottled with gray silty clay, some fine to coarse sand, trace fine gravel.		H=2.5 G
816.8							Weathered limestone.		
	5						- No seepage encountered. - Encountered auger refusal on limestone bedrock at 2.2'. - Boring located using field pacing and taping methods and should be considered approximate. - Elevations estimated from available topographic mapping and should be considered approximate.		
	10								
	15								
	20								
	25								

2010 NEW DEFAULT BORING LOG-W/ N60

WATER LEVEL: ▽ "Dry" ▼
WATER NOTE: At Completion
DATE: 9/9/13

SYMBOLS USED TO INDICATE TEST RESULTS

G - Gradation, Q - Uncon Comp, T - Triax Comp, C - Consol. — See Separate Curves

H - Penetrometer (tsf)
W - Unit Dry Wt (pcf)
D - Relative Dens (%)

Drill Rod Energy Ratio : .76
Last Calibration Date : 02/19/13
Drill Rig Number : Truck 55(AW)

JOB: 1171-13-042A

LOG OF BORING NO. B-208
SR161/RIVERSIDE DRIVE IMPROVEMENTS
DUBLIN, OHIO

S&ME

LOCATION: See Plate 2 of Appendix. ELEVATION: 798.1 DATE: 9/9/13

DRILLING METHOD: 4-1/2" O.D. Continuous-flight Auger COMPLETION DEPTH: 8.6'

SAMPLER(S): 2" and 2-1/2" O.D. Split-barrel Samplers

ELEV.	DEPTH, FEET	SAMPLE NUMBER	SAMPLE	SAMPLE EFFORT	N_{60}	SAMPLE REC-%	DESCRIPTION	NATURAL CONSISTENCY INDEX / NATURAL MOISTURE CONTENT (PLASTIC LIMIT — LIQUID LIMIT)	TEST RESULTS
797.9	0						TOPSOIL - 2 INCHES		
		1		19/20/22	53	67	Very-dense gray and brown fine to coarse gravel, some fine to coarse sand, some silty clay, contains few cobbles.		
795.1									
		2		4/4/4	10	67	Loose gray and brown fine to coarse gravel, little to some fine to coarse sand, some to "and" silty clay.		G
	5								
		3		3/3/3	8				
		2S		7		27			
789.6									
789.5		4		50-1"R		100	Weathered limestone.		
	10								
	15								
	20								
	25								

- No seepage encountered.
- Encountered cobbles at 1.5'.
- Encountered auger refusal on limestone bedrock at 8.6'.
- Boring located using field pacing and taping methods and should be considered approximate.
- Boring elevation provided by EMH&T.

2010 NEW DEFAULT BORING LOG-W/ N60

WATER LEVEL: "Dry"
WATER NOTE: At Completion
DATE: 9/9/13

SYMBOLS USED TO INDICATE TEST RESULTS

G - Gradation, Q - Uncon Comp, T - Triax Comp, C - Consol. — See Separate Curves

H - Penetrometer (tsf)
W - Unit Dry Wt (pcf)
D - Relative Dens (%)

Drill Rod Energy Ratio : .76
Last Calibration Date : 02/19/13
Drill Rig Number : Truck 55(AW)

JOB: 1171-13-042A

LOG OF BORING NO. B-209
SR161/RIVERSIDE DRIVE IMPROVEMENTS
DUBLIN, OHIO

S&ME

LOCATION: **See Plate 2 of Appendix.** ELEVATION: **796 ±** DATE: **9/11/13**

DRILLING METHOD: **4-1/2" O.D. Continuous-flight Auger** COMPLETION DEPTH: **5.5'**

SAMPLER(S): **2" O.D. Split-barrel Sampler**

ELEV.	DEPTH, FEET	SAMPLE NUMBER	SAMPLE	SAMPLE EFFORT	N_{60}	SAMPLE REC-%	DESCRIPTION	NATURAL CONSISTENCY INDEX / NATURAL MOISTURE CONTENT / PLASTIC LIMIT / LIQUID LIMIT (10 20 30 40)	TEST RESULTS
795.3	0						ASPHALT - 7 INCHES		
795.0							GRANULAR BASE - 5 INCHES		
793.5		1		14/16/10	33	100	Dense gray fine to coarse gravel, some fine to coarse sand, some silty clay.		G
792.0		2		8/9/5	18	100	Very-stiff gray mottled with brown silty clay, some fine to coarse sand, some fine to coarse gravel.		H=2.5-3.0
790.5	5	3		7/8/15	29	33	Medium-dense gray and brown fine to coarse gravel, some fine to coarse sand, some silty clay.		
	10						- No seepage encountered. - Encountered auger refusal on limestone bedrock at 5.3'. - Boring located using field pacing and taping methods and should be considered approximate. - Elevations estimated from available topographic mapping and should be considered approximate.		
	15								
	20								
	25								

2010 NEW DEFAULT BORING LOG-W/ N60

WATER LEVEL: "Dry"
WATER NOTE: At Completion
DATE: 9/11/13

SYMBOLS USED TO INDICATE TEST RESULTS

G - Gradation
Q - Uncon Comp
T - Triax Comp
C - Consol.
(See Separate Curves)

H - Penetrometer (tsf)
W - Unit Dry Wt (pcf)
D - Relative Dens (%)

Drill Rod Energy Ratio : .75
Last Calibration Date : 02/20/13
Drill Rig Number : S&ME 550(AW)

JOB: 1171-13-042A

LOG OF BORING NO. B-210
SR161/RIVERSIDE DRIVE IMPROVEMENTS
DUBLIN, OHIO

S&ME

LOCATION: See Plate 2 of Appendix. ELEVATION: 797.8 DATE: 9/10/13

DRILLING METHOD: 4-1/2" O.D. Continuous-flight Auger COMPLETION DEPTH: 11.1'

SAMPLER(S): 2" O.D. Split-barrel Sampler, NQ Rock Core Barrel

ELEV.	DEPTH, FEET	SAMPLE NUMBER	SAMPLE	SAMPLE EFFORT	N_{60}	SAMPLE REC-%	DESCRIPTION	NATURAL CONSISTENCY INDEX / NATURAL MOISTURE CONTENT (PLASTIC LIMIT – LIQUID LIMIT; 10 20 30 40)	TEST RESULTS
797.5	0						ASPHALT - 3 INCHES		
796.9							GRANULAR BASE - 8 INCHES		
		1		3 / 4 / 8	15	100	Hard brown mottled with gray silty clay, some fine to coarse sand, little fine to coarse gravel.		H=4.0-4.5 G
794.8							Medium-dense brown fine to coarse sand, "and" fine to coarse gravel, some clayey silt.		
		2		11 / 6 / 14	25	100			
793.3		2A				100	Very-stiff gray silty clay, little fine to coarse sand, some fine to coarse gravel.		H=2.5
	5								
792.0									
791.7		3		50-1"R		100	Weathered limestone.		
		4		REC 72% RQD 0%			Medium-hard gray-brown limestone, thickly bedded, ferriferous, crystalline, fossiliferous, vuggy, fractured to highly fractured.		
	10								
786.7									
							- No seepage or groundwater encountered prior to adding water for rock core. - Boring located using field pacing and taping methods and should be considered approximate. - Boring elevation provided by EMH&T.		
	15								
	20								
	25								

2010 NEW DEFAULT BORING LOG-W/ N60

WATER LEVEL: ▽ ▼
WATER NOTE:
DATE:

SYMBOLS USED TO INDICATE TEST RESULTS

G - Gradation
Q - Uncon Comp
T - Triax Comp
C - Consol.
(See Separate Curves)

H - Penetrometer (tsf)
W - Unit Dry Wt (pcf)
D - Relative Dens (%)

Drill Rod Energy Ratio : .76
Last Calibration Date : 02/19/13
Drill Rig Number : Truck 55(AW)

JOB: 1171-13-042A

LOG OF BORING NO. B-211
SR161/RIVERSIDE DRIVE IMPROVEMENTS
DUBLIN, OHIO

S&ME

LOCATION: See Plate 2 of Appendix. ELEVATION: 797.0 DATE: 9/10/13

DRILLING METHOD: 4-1/2" O.D. Continuous-flight Auger COMPLETION DEPTH: 2.2'

SAMPLER(S): 2" O.D. Split-barrel Sampler

ELEV.	DEPTH, FEET	SAMPLE NUMBER	SAMPLE	SAMPLE EFFORT	N_{60}	SAMPLE REC-%	DESCRIPTION	NATURAL CONSISTENCY INDEX / NATURAL MOISTURE CONTENT (PLASTIC LIMIT — LIQUID LIMIT) 10 20 30 40	TEST RESULTS
796.4	0						ASPHALT - 6 INCHES		
796.0							GRANULAR BASE - 6 INCHES		
		1	■	50-4"R		20	Very-dense gray and brown fine to coarse gravel, some fine to coarse sand, little silty clay.		
794.8									
	5								
	10								
	15								
	20								
	25								

- No seepage encountered.
- Encountered auger refusal on limestone bedrock at 2.2'.
- Boring located using field pacing and taping methods and should be considered approximate.
- Boring elevation provided by EMH&T.

2010 NEW DEFAULT BORING LOG-W/ N60

WATER LEVEL: "Dry"
WATER NOTE: At Completion
DATE: 9/10/13

SYMBOLS USED TO INDICATE TEST RESULTS

G - Gradation, Q - Uncon Comp, T - Triax Comp, C - Consol. — See Separate Curves

H - Penetrometer (tsf)
W - Unit Dry Wt (pcf)
D - Relative Dens (%)

Drill Rod Energy Ratio : .76
Last Calibration Date : 02/19/13
Drill Rig Number : Truck 55(AW)

JOB: 1171-13-042A

APPENDIX C

TABLE C.1: ODOT GEOTECHNICAL BULLETIN GB1 - SUBGRADE ANALYSIS SPREADSHEET
RIVERSIDE DR. / S.R. 161 DUBLIN, OHIO

Subgrade Analysis
V. 12.00 12/30/11

Design CBR 7

Global Options		
320	R&R	Option
206	CS	Option
	LS	Option
	LKD	Option
206	Depth	12

Classification Counts by Sample																	
R	1a	1b	3	3a	2-4	2-5	2-6	2-7	4a	4b	5	6a	6b	7-5	7-6	8a	8b
4	0	5	0	0	9	0	7	0	2	0	0	5	12	0	1	0	0
9%		11%			20%		16%		4%			11%	27%		2%		
9%	47%								44%								

Surface Class	
2-5	0
4b	0
5	0
7-5	0
7-6	0
8a	0
8b	0
R	0

% Borings	
N_{60L}<= 5	0%
<=10	38%
>=20	23%
M+	8%
R	31%

% Surface	
15%	
0%	15%

Rig	ER
A	84
B	76
C	
D	
E	
F	
G	
H	

		N_{60}	N_{60L}	PI	Clay	M	M_{OPT}	GI
Total Borings	13							
PID	NA							
Location	Intersection of SR 161 / Riverside Dr.							
Average		28.4	15.7	16.7	22.4	13.3	12.0	6.56
Maximum		119	30	42	21	22	36	38	72	20	18	12
Minimum		8	8	0	0	10	11	7	18	6	6	0

UC @ Surface
16.5
18
15

	Boring					Subgrade		Standard Penetration						Physical Characteristics						Moisture		Class		Comments	Problem		Undercuts		Analysis
#	B #	Boring Location	Depth	To	Cut Fill	Depth	To	n_2	n_3	N	Rig	N_{60}	N_{60L}	LL	PL	PI	% Silt	% Clay	P 200	M	M_{OPT}	Ohio DOT	GI		w/ Class	w/ MN	UC Class	UC MN	
1	B-202	Riverside Dr	1.5	2.1	-0.8	0.7	1.3	4	4	8	B	10		39	19	20	30	24	54	17	16	6b	8			N		15	
		~STA 93+70	3.0	4.0		2.2	3.2	5	7	12		15									16	6b	10						UC 15" or
		~60' RT	4.5	6.0		3.7	5.2	5	6	11		14									16	6b	10			MN			LS/LKD 14"
			6.0	6.9		5.2	6.1	10	30	40		51	10								10	2-4							
2	B-203	Riverside Dr	1.0	2.5	1.7	2.7	4.2	4	6	10	B	13									10	2-6	2						
		~STA 96+30	2.5	4.0		4.2	5.7	9	11	20		25		42	21	21	17	20	37	14	18	7-6	3						
		~28' LT	4.0			5.7																R			BR		24		
													13																
3	B-303	Riverside Dr	1.0	3.0	6.7	7.7	9.7	3	3	6	A	8									16	6b		Fill		N		18	
		~STA 98+40	3.5	5.0		10.2	11.7	40	45	85		119									10	2-4		Possible fill					
		~65' LT	6.0	7.4		12.7	14.1	30		30		42									10	2-4		Possible fill					
			8.5	8.8		15.2	15.5	30		30		42	8								10	2-4		Possible fill					
4	B-204	Riverside Dr	1.0	2.0	7.2	8.2	9.2	9	7	16	B	20									10	2-4							
		~STA 98+50	2.5	3.5		9.7	10.7	4	5	9		11		28	18	10	15	10	25	8	10	2-4				N		14	
		~32' RT	4.0	5.5		11.2	12.7	4	5	9		11									10	2-4				N		14	
			5.5	6.8		12.7	14.0	7	30	37		47	11								10	2-4							
5	B-208	Riverside Dr	1.0	2.0	8.5	9.5	10.5	20	22	42	B	53									10	2-4							
		~STA 102+90	3.5	4.5		12.0	13.0	4	4	8		10		35	19	16	24	22	46	12	16	6b				N		15	
		~90' LT	7.5	7.9		16.0	16.4	3	3	6		8									16	6b				N		18	
			8.5	8.6		17.0	17.1	30		30		38	8																
6	B-210	Riverside Dr	1.0	3.0	4.2	5.2	7.2	4	8	12	B	15		31	18	13	34	26	60	13	14	6a							
		~STA 106+05	3.5	4.5		7.7	8.7	6	14	20		25									10	4a							
		~32' RT	4.5	5.0		8.7	9.2	30		30		38									14	6a							
			6.0	11.1		10.2	15.3						15									R			BR		24		
7	B-211	Riverside Dr	1.0	2.2	8.2	9.2	10.4	30		30	B	38									6	1b							
		~STA 109+65	2.2	10.0		10.4	18.2	30		30		38										R			BR		24		
		~40' RT																											
													30																

* Cut/Fill Amount for borings considers an approximate 1.3-foot thick proposed pavement section.

Project No. 1117-14-012A/B

TABLE C.1: ODOT GEOTECHNICAL BULLETIN GB1 - SUBGRADE ANALYSIS SPREADSHEET
RIVERSIDE DR. / S.R. 161 DUBLIN, OHIO

	Boring					Subgrade		Standard Penetration						Physical Characteristics						Moisture		Class		Comments	Problem		Undercuts		Analysis
#	B #	Boring Location	Depth	To	Cut Fill	Depth	To	n_2	n_3	N	Rig	N_{60}	N_{60L}	LL	PL	PI	% Silt	% Clay	P 200	M	M_{OPT}	Ohio DOT	GI		w/ Class	w/ MN	UC Class	UC MN	
8	B-304	SR 161	1.5	2.8	-1.3	0.2	1.5	3	6	9	A	13		32	16	16	33	29	62	16	16	6b	8	Fill					May require UC
		~STA 15+00	3.5	5.0		2.2	3.7	3	5	8		11									16	6b	10	Fill		N		14	based on
		~18' RT	6.0	7.5		4.7	6.2	6	7	13		18		38	17	21	34	38	72	19	16	6b	12	Fill					proofroll
			8.5	9.5		7.2	8.2	13	21	34		48	11								16	6b		Fill					observation
9	B-205	SR 161	1.5	3.0	-1.3	0.2	1.7	7	9	16	B	20		35	17	18	14	13	27	10	10	2-6	1						
		~STA 20+00	3.0	4.5		1.7	3.2	7	6	13		16									10	2-6	2						
		~28' LT	4.5	6.0		3.2	4.7	3	5	8		10									10	4a	5			N		15	
			6.0	7.5		4.7	6.2	4	5	9		11	10								14	6a	8			N		14	
10	B-206	SR 161	1.5	2.0	-0.3	1.2	1.7	30		30	B	38		28	14	14	29	32	61	16	14	6a	7						
		~STA 21+65	2.0	2.2		1.7	1.9															R			BR		24		3" Rock Overex.
		~18' RT																											(if no granular
													30																base)
11	B-305	Bypass	1.5	2.5	-0.8	0.7	1.7	7	8	15	A	21									16	6b	10	Fill					May require UC
		~STA 14+85	3.0	4.0		2.2	3.2	3	4	7		10		40	18	22	36	34	70	20	16	6b	12	Fill		N		15	based on
		~20' LT	4.5	5.5		3.7	4.7	6	9	15		21									10	2-6	2						proofroll
			6.0	6.5		5.2	5.7	9	9	18		25	10								10	2-6							observation
12	B-209	Bypass	1.0	2.5	1.2	2.2	3.7	16	10	26	B	33		30	17	13	14	14	28	8	10	2-6	0						
		~STA 211+90	2.5	4.0		3.7	5.2	9	5	14		18									14	6a	8						
		~60' LT	4.0	5.5		5.2	6.7	8	15	23		29									10	2-6							
													18																
13	B-306	Bypass	1.5	3.5	4.3	5.8	7.8	30		30	A	42									6	1b							
		~STA 213+18	4.0	5.5		8.3	9.8	14	30	44		62		0	0		11	7	18	6	6	1b							
		~ 20' LT	5.5	6.5		9.8	10.8	30		30		42									6	1b							
			7.0	8.8		11.3	13.1	30		30		42	30								6	1b							

* Cut/Fill Amount for borings considers an approximate 1.3-foot thick proposed pavement section.

Project No. 1117-14-012A/B

APPENDIX D

Wall 4 - Service Load Case

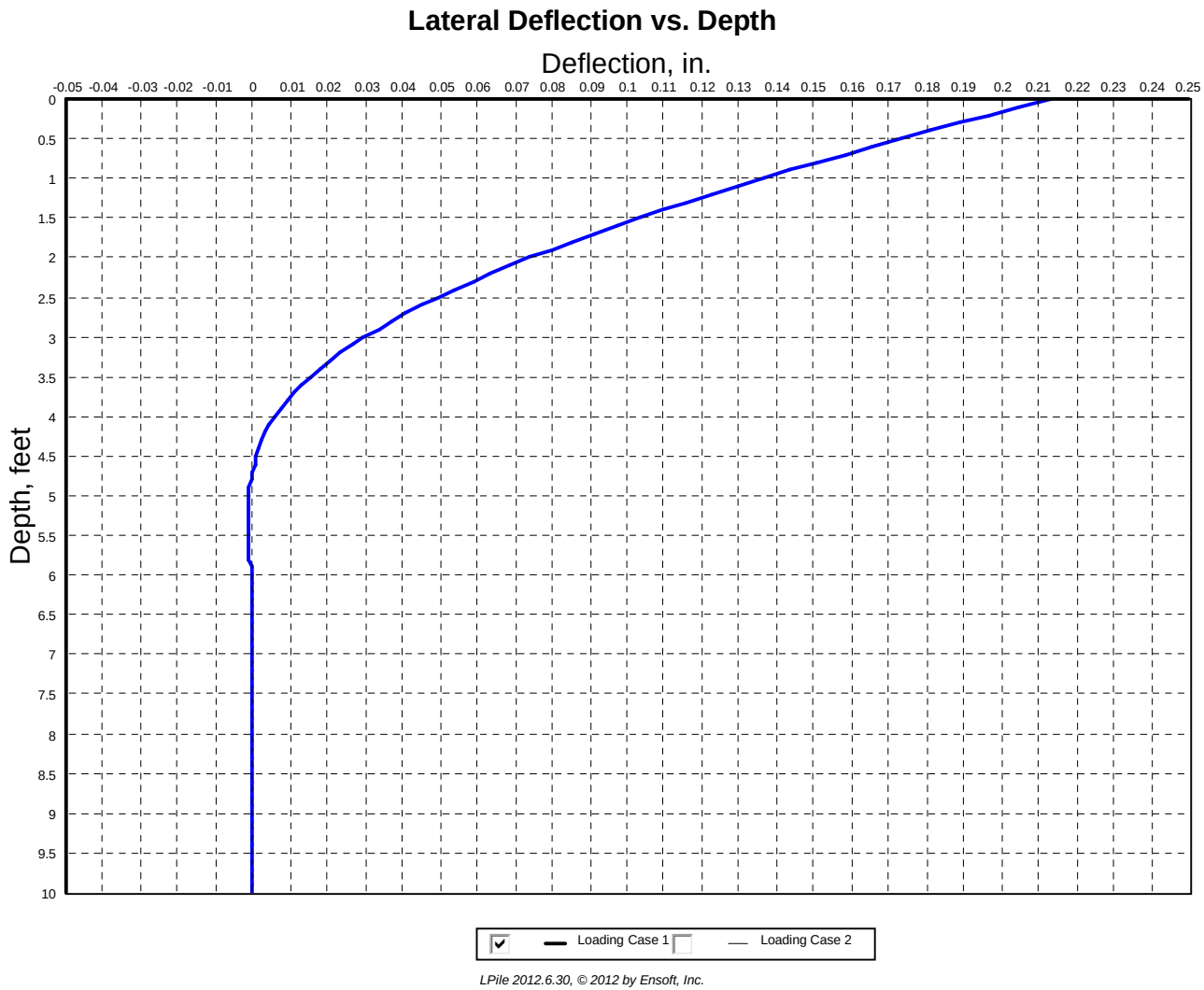

Wall 4 - Strength Load Case

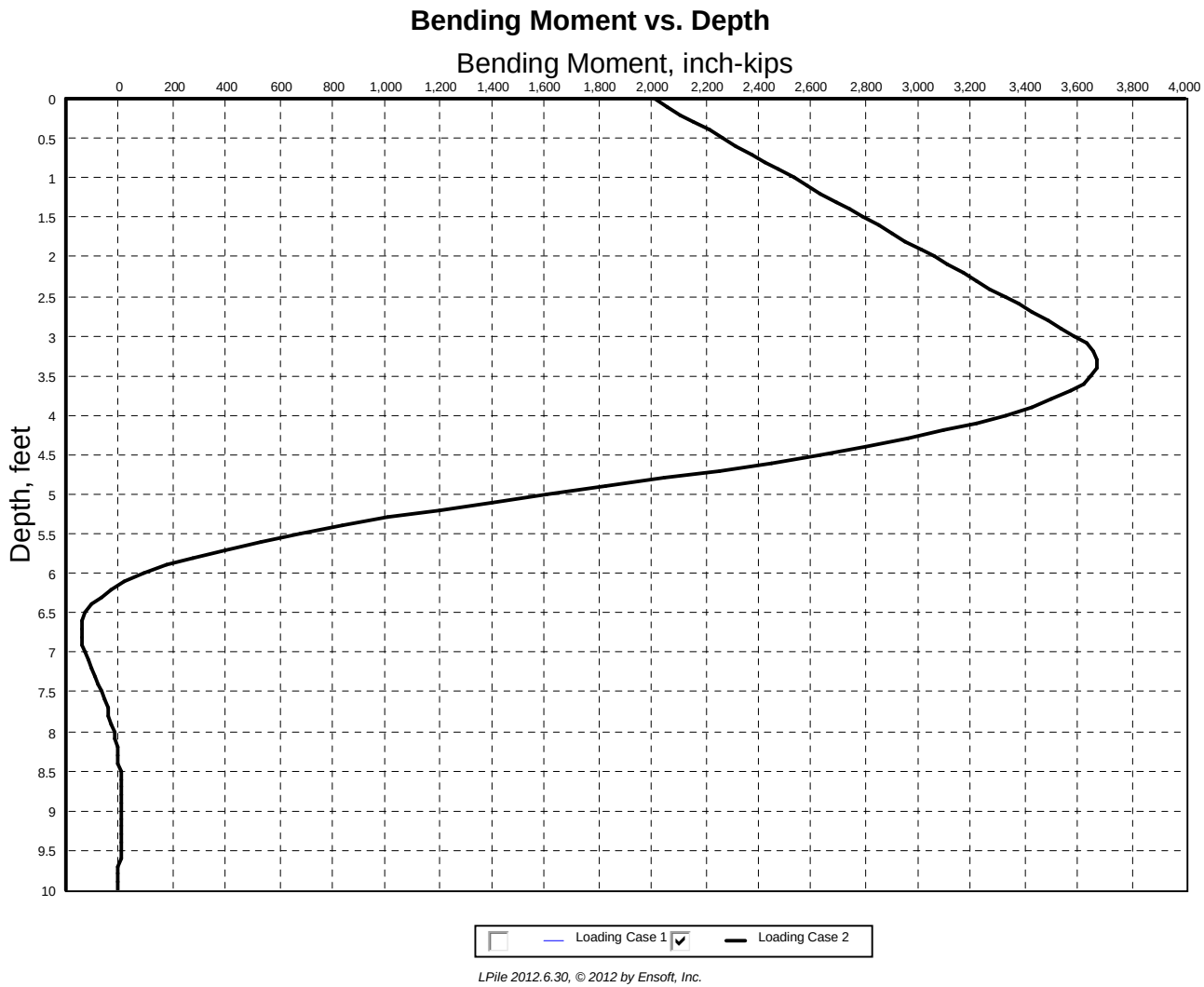

Wall 4 - Strength Load Case

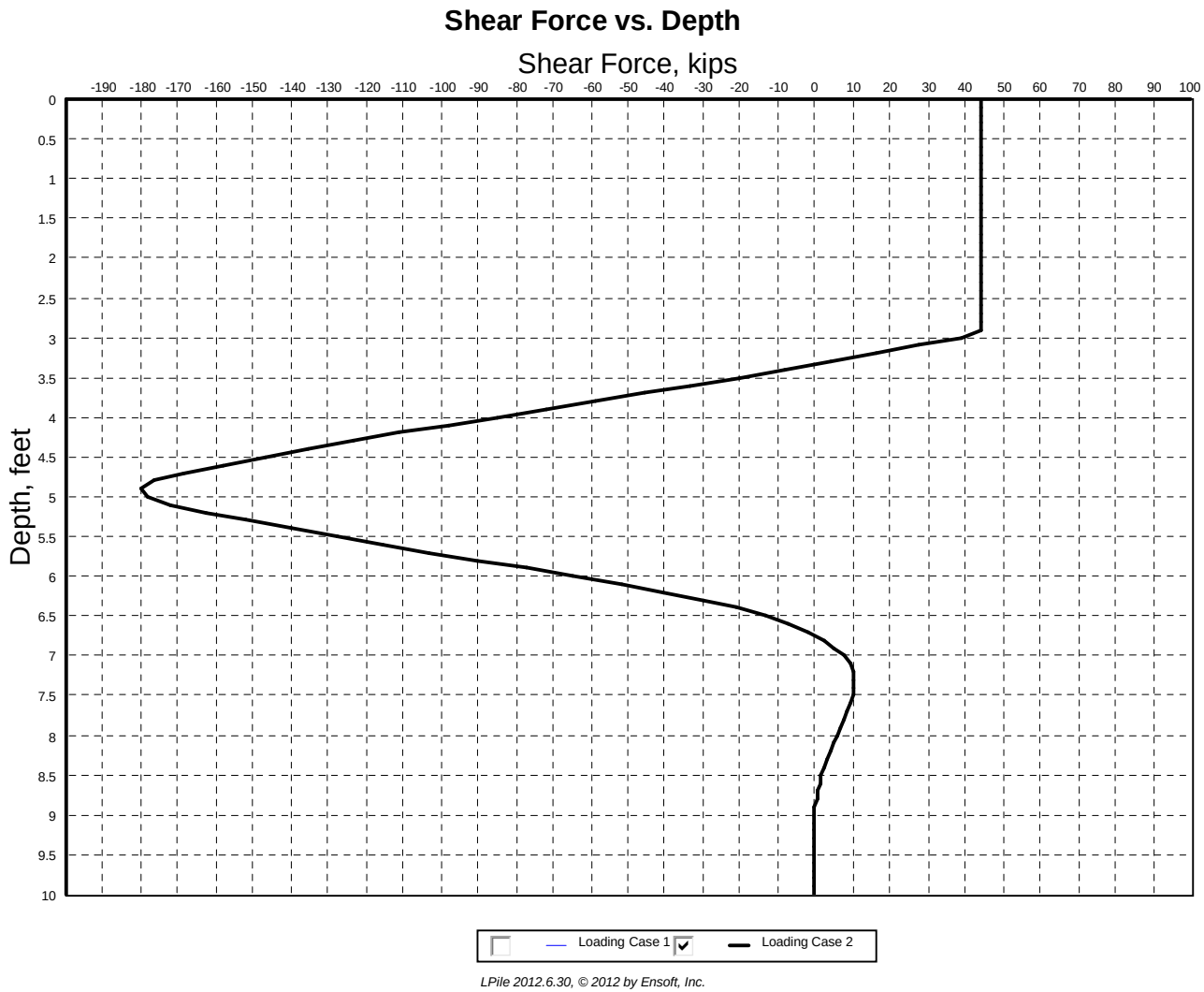

APPENDIX E

℄ BYPASS

(G) PI STA 202+90.77
Δ = 21° 31' 38" (LT)
Dc = 12° 00' 00"
R = 477.46'
Ls = 200.00'
θs = 03° 59' 55"
LT = 133.64'
ST = 66.95'
Lc = 179.39'
T1 = 90.77'
T2 = 90.77'
Es = 8.55'
emax = 0.057

(H) PI STA 207+15.13
Δ = 56° 53' 50" (RT)
Dc = 14° 00' 00"
R = 409.26'
T = 221.73'
L = 406.41'
E = 56.21'
C = 389.91'
C.B. = N 22° 33' 27" W
emax = 0.059

(I) PI STA 212+95.33
Δ = 9° 51' 50" (LT)
Dc = 1° 15' 00"
R = 4,583.66'
T = 395.53'
L = 789.11'
E = 17.03'
C = 788.13'
C.B. = N 0° 57' 33" E
emax = 0.0156

℄ CONST SR 161

(J) PI STA 16+43.51
DEFLECTION = 03° 22' 00" (RT)
(NO CURVE)

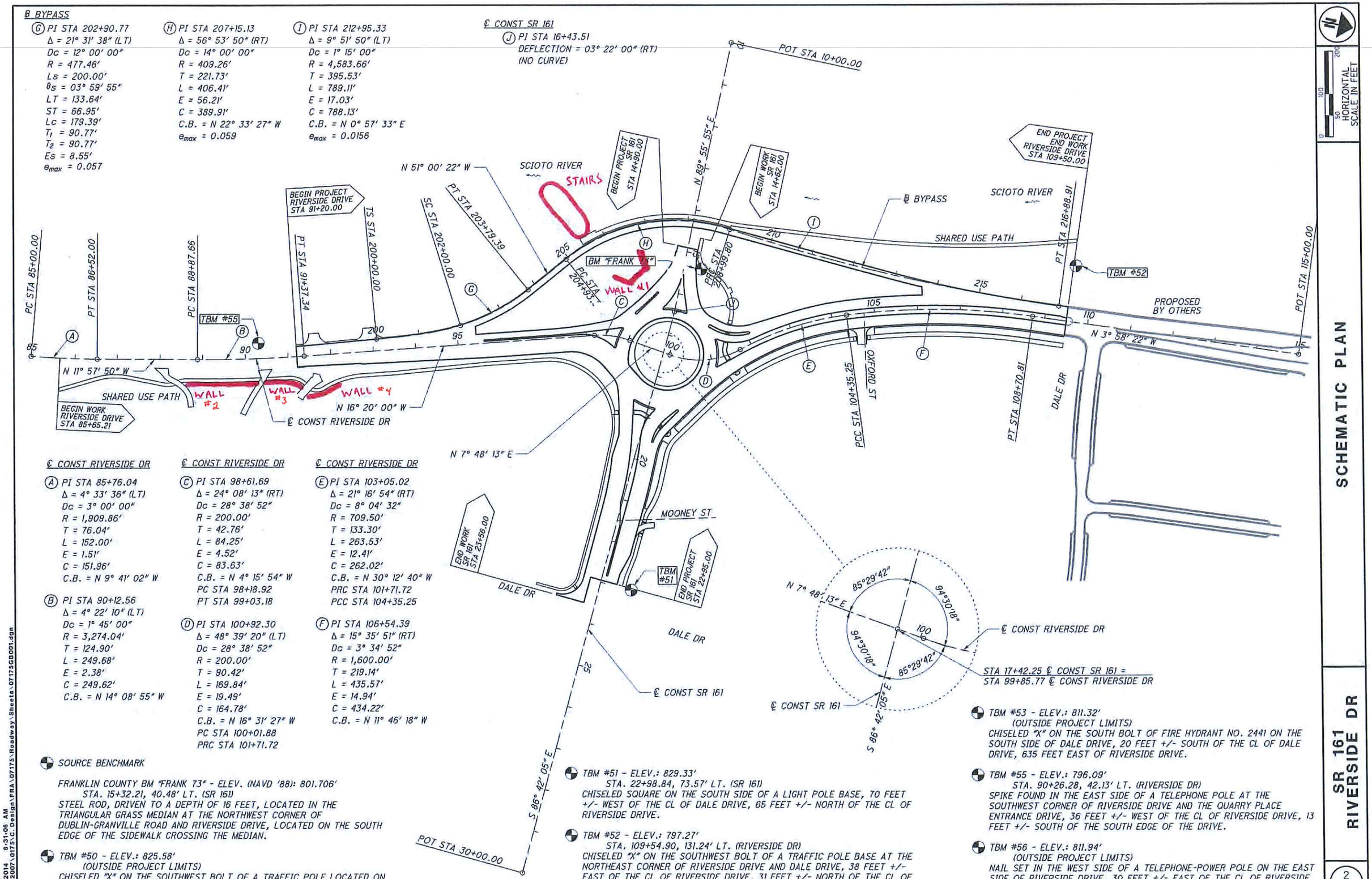

℄ CONST RIVERSIDE DR

(A) PI STA 85+76.04
Δ = 4° 33' 36" (LT)
Dc = 3° 00' 00"
R = 1,909.86'
T = 76.04'
L = 152.00'
E = 1.51'
C = 151.96'
C.B. = N 9° 41' 02" W

(B) PI STA 90+12.56
Δ = 4° 22' 10" (LT)
Dc = 1° 45' 00"
R = 3,274.04'
T = 124.90'
L = 249.68'
E = 2.38'
C = 249.62'
C.B. = N 14° 08' 55" W

℄ CONST RIVERSIDE DR

(C) PI STA 98+61.69
Δ = 24° 08' 13" (RT)
Dc = 28° 38' 52"
R = 200.00'
T = 42.76'
L = 84.25'
E = 4.52'
C = 83.63'
C.B. = N 4° 15' 54" W
PC STA 98+18.92
PT STA 99+03.18

(D) PI STA 100+92.30
Δ = 48° 39' 20" (LT)
Dc = 28° 38' 52"
R = 200.00'
T = 90.42'
L = 169.84'
E = 19.49'
C = 164.78'
C.B. = N 16° 31' 27" W
PC STA 100+01.88
PRC STA 101+71.72

℄ CONST RIVERSIDE DR

(E) PI STA 103+05.02
Δ = 21° 16' 54" (RT)
Dc = 8° 04' 32"
R = 709.50'
T = 133.30'
L = 263.53'
E = 12.41'
C = 262.02'
C.B. = N 30° 12' 40" W
PRC STA 101+71.72
PCC STA 104+35.25

(F) PI STA 106+54.39
Δ = 15° 35' 51" (RT)
Dc = 3° 34' 52"
R = 1,600.00'
T = 219.14'
L = 435.57'
E = 14.94'
C = 434.22'
C.B. = N 11° 46' 18" W

SOURCE BENCHMARK

FRANKLIN COUNTY BM "FRANK 73" - ELEV. (NAVD '88): 801.706'
STA. 15+32.21, 40.48' LT. (SR 161)
STEEL ROD, DRIVEN TO A DEPTH OF 16 FEET, LOCATED IN THE TRIANGULAR GRASS MEDIAN AT THE NORTHWEST CORNER OF DUBLIN-GRANVILLE ROAD AND RIVERSIDE DRIVE, LOCATED ON THE SOUTH EDGE OF THE SIDEWALK CROSSING THE MEDIAN.

TBM #50 - ELEV.: 825.58'
(OUTSIDE PROJECT LIMITS)
CHISELED "X" ON THE SOUTHWEST BOLT OF A TRAFFIC POLE LOCATED ON THE NORTHEAST CORNER OF N. HIGH STREET AND E. BRIDGE STREET.

TBM #51 - ELEV.: 829.33'
STA. 22+98.84, 73.57' LT. (SR 161)
CHISELED SQUARE ON THE SOUTH SIDE OF A LIGHT POLE BASE, 70 FEET +/- WEST OF THE CL OF DALE DRIVE, 65 FEET +/- NORTH OF THE CL OF RIVERSIDE DRIVE.

TBM #52 - ELEV.: 797.27'
STA. 109+54.90, 131.24' LT. (RIVERSIDE DR)
CHISELED "X" ON THE SOUTHWEST BOLT OF A TRAFFIC POLE BASE AT THE NORTHEAST CORNER OF RIVERSIDE DRIVE AND DALE DRIVE, 38 FEET +/- EAST OF THE CL OF RIVERSIDE DRIVE, 31 FEET +/- NORTH OF THE CL OF DALE DRIVE.

TBM #53 - ELEV.: 811.32'
(OUTSIDE PROJECT LIMITS)
CHISELED "X" ON THE SOUTH BOLT OF FIRE HYDRANT NO. 2441 ON THE SOUTH SIDE OF DALE DRIVE, 20 FEET +/- SOUTH OF THE CL OF DALE DRIVE, 635 FEET EAST OF RIVERSIDE DRIVE.

TBM #55 - ELEV.: 796.09'
STA. 90+26.28, 42.13' LT. (RIVERSIDE DR)
SPIKE FOUND IN THE EAST SIDE OF A TELEPHONE POLE AT THE SOUTHWEST CORNER OF RIVERSIDE DRIVE AND THE QUARRY PLACE ENTRANCE DRIVE, 36 FEET +/- WEST OF THE CL OF RIVERSIDE DRIVE, 13 FEET +/- SOUTH OF THE SOUTH EDGE OF THE DRIVE.

TBM #56 - ELEV.: 811.94'
(OUTSIDE PROJECT LIMITS)
NAIL SET IN THE WEST SIDE OF A TELEPHONE-POWER POLE ON THE EAST SIDE OF RIVERSIDE DRIVE, 30 FEET +/- EAST OF THE CL OF RIVERSIDE DRIVE, 100 FEET +/- SOUTH OF MARTIN ROAD.

SCHEMATIC PLAN

SR 161
RIVERSIDE DR

MLong
10/7/2014 8:31:06 AM
D:\C02007\07175\C.Design\FRA\07175\Roadway\Sheets\07175GB001.dgn

Geotechnical Engineering Report

Assisted Living and Skilled Nursing Building
Vrable Healthcare Center
Dublin, Ohio

January 14, 2013
Terracon Project No. N4125218

Prepared for:
Vrable Land Holding Massilon, LLC
c/o: JMM Architects, Inc.
Columbus, Ohio

Prepared by:
Terracon Consultants, Inc.
Columbus, Ohio

Offices Nationwide
Employee-Owned
Established in 1965
terracon.com

Terracon

Geotechnical ■ Environmental ■ Construction Materials ■ Facilities

City of Dublin
OHIO, USA
Approved for Construction
BCS-2013-00400040
04/12/13

Terracon

January 14, 2013

Vrable Land Holding Massilon, LLC
c/o: JMM Architects, Inc.
4685 Larwell Drive
Columbus, Ohio 43220

Attn: Mr. James Churski
P: [614] 326 5565
F: [614] 326 5566
E: james@jmmarch.com

Re: Geotechnical Engineering Report
Assisted Living and Skilled Nursing Building
Vrable Healthcare Center
Dublin, Ohio
Terracon Project Number: N4125218

Dear Mr. Churski:

Terracon Consultants, Inc. (Terracon) has completed the geotechnical engineering services for the above referenced project. This study was performed in general accordance with our proposal number PN4120581 dated October 25, 2012 and our agreement for services of December 11, 2012. This report presents the findings of the subsurface exploration and provides geotechnical recommendations regarding the design and construction of foundations, floor slabs, and pavements for the proposed development.

We appreciate the opportunity to be of service to you on this project. If you have any questions concerning this report, or if we may be of further service, please contact us.

Sincerely,
Terracon Consultants, Inc.

FOR

Alma K. Baratta, E.I.
Senior Staff Engineer

Kevin M. Ernst, P.E.
Geotechnical Department Manager

City of Dublin
OHIO, USA
Approved for Construction
BP13-00400040
04/12/13

TABLE OF CONTENTS

Page

EXECUTIVE SUMMARY ..... **i**

1.0 INTRODUCTION **1**

2.0 PROJECT INFORMATION **1**

2.1 Project Description 1

2.2 Site Location and Description 2

3.0 SUBSURFACE CONDITIONS **2**

3.1 Typical Profile 2

3.2 Water Level Observations 3

4.0 RECOMMENDATIONS FOR DESIGN AND CONSTRUCTION **5**

4.1 Geotechnical Considerations 5

4.2 Earthwork 6

4.2.1 Initial Site Grading and Preparation 7

4.2.2 Structural Fill Requirements 8

4.2.3 Structural Fill Placement and Compaction Requirements 9

4.2.4 Utility Trench Backfill 9

4.2.5 Grading and Drainage 10

4.2.6 Earthwork Construction Considerations 10

4.3 Foundations 11

4.3.1 Foundation Design Recommendations 12

4.3.2 Foundation Construction Considerations 12

4.4 Seismic Considerations 14

4.5 Floor Slab 14

4.5.1 Design Recommendations 14

4.5.2 Floor Slab Construction Considerations 15

4.6 Pavements 15

4.6.1 Subgrade Preparation 15

4.6.2 Design Considerations 16

4.6.3 Pavement Drainage 17

4.6.4 Pavement Maintenance 17

4.7 Lateral Earth Pressures 18

5.0 GENERAL COMMENTS **19**

APPENDIX A – FIELD EXPLORATION

Field Exploration Description ..... Exhibit A-1

Site Location Map ..... Exhibit A-2

Boring Location Plan ..... Exhibit A-3

Boring Logs ..... Exhibit A-3 to A-18

APPENDIX B – LABORATORY TESTING

Laboratory Testing ..... Exhibit B-1

Laboratory Test Results ..... Exhibit B-2 to B-4

City of Dublin
OHIO, USA
Approved for Construction
BP13-00400040
04/12/13

APPENDIX C – SUPPORTING DOCUMENTS

General Notes ..... Exhibit C-1
Unified Soil Classification System ..... Exhibit C-2
Description of Rock Properties ..... Exhibit C-3

City of Dublin
OHIO, USA
Approved for Construction
BP13-00400040
04/12/13

EXECUTIVE SUMMARY

Terracon Consultants, Inc. has completed a geotechnical exploration for the proposed Assisted Living and Skilled Nursing Building – Vrable Healthcare Center to be located near the southwest corner of Tuller Road and Tuller Ridge Drive in Dublin, Ohio. Fifteen (15) borings, designated B-1 through B-12 and P-1 through P-3, were performed to depths ranging from approximately 8.7 to 20 feet below the existing ground surface in the proposed building and pavement areas.

Based on the information obtained from our subsurface exploration, the site can be developed for the proposed project. The following geotechnical considerations were identified:

- The recently completed test borings indicated the presence of fill consisting of cohesive and granular soils with loose relative density (granular soils) or soft to stiff consistency (cohesive soils) to a depth of approximately 0.8 to 8 feet below existing grade. The fill exhibited variable consistency and relative density and contained varying amounts of organics, glass, aluminum, brick, and concrete fragments. Beneath the fill, native cohesive soils with medium stiff to very stiff consistency, and native non-cohesive fine-grained and granular soils with medium dense to very dense relative density were encountered to a depth of about 9 to 18.6 feet beneath existing grades, underlain by limestone bedrock with hard hardness to the termination depth of the borings.

- Based on the borings, the fill is not suitable for direct support of building foundations and slab-on-grade floors due to the potential for excessive total and differential settlement response. The proposed building structure can be supported on shallow spread footings. However, the shallow foundation excavations should extend through the existing fill and bear on the underlying native cohesive soils of at least medium stiff consistency, native non-cohesive fine-grained soils or native granular soils of at least medium dense relative density, bedrock, or on structural fill or lean concrete that extends to acceptable bearing materials. Existing fill should also be completely removed to expose the native soil subgrade in areas receiving new structural fill placement.

- To provide for suitable subgrades for floor slab and pavement support, we recommend that a complete undercut and replacement of the existing fill be undertaken in areas where the fill is exposed at the floor slab design subgrade level, and a partial undercut and replacement of the existing fill be undertaken in areas where the fill is exposed at the pavement design subgrade level. The undercut in pavement areas should extend to a depth of at least 3 feet below the design subgrade elevation in drive and parking areas. Fill was encountered in Borings B-2, B-6, and B-7. As discussed below, the upper 18 inches should consist of Low Volume Change Material conforming to the requirements in section **4.2.2 Structural Fill Material Requirements**.

City of Dublin
OHIO, USA
Approved for Construction
BP13-00400040
04/12/13

- Support of pavements on or above existing fill soils is discussed in this report. However, even with the recommended construction testing, there is a risk that unsuitable materials within or buried by the fill will not be discovered. This risk cannot be eliminated without removing the fill, but can be reduced by thorough exploration and testing during construction.

- The near surface native cohesive soils contained moderately to highly plastic soils. Due to the potential for shrink-swell action, these soils are not suitable for direct floor slab support. As such, in this report we provide recommendations for developing a subgrade suitable for floor slab support by providing a minimum 18 inch thick layer of structural fill constructed of Low Volume Change Material below the aggregate base of the new floor slab. Requirements for Low Volume Change Material are provided in section **4.2.2 Structural Fill Material Requirements** and details for floor slab subgrade preparation are provided in section **4.5 Floor Slab**.

- Soils prone to shrink/swell characteristics are present on this site. This report provides recommendations to help mitigate the effects of soil shrinkage and swell. However, even if these procedures are followed, some movement and cracking in the structure should be anticipated. The severity of cracking and other damage such as uneven floor slabs will probably increase if any modification of the site results in excessive wetting or drying of the shrink/swell prone soils. Eliminating the risk of movement and distress may not be feasible, but it may be possible to further reduce the risk of movement if significantly more expensive measures are used during construction. We would be pleased to discuss other construction alternatives with you upon request.

- It is anticipated the decomposed, severely weathered bedrock can be mechanically ripped. Deeper excavation into the bedrock will require the use of heavy-duty excavation equipment. Drilling and blasting will be required to facilitate rock break-up and removal may also be required in deeper, more competent rock. Jack-hammering may be required in utility excavations where working space will be limited. Consideration should be given to the location and invert elevations of utilities planned for the project to reduce the impacts of difficult excavation. Final elevations should be chosen to reduce the amount of potential bedrock excavation.

- The borings were observed while drilling and immediately after completion for the presence and level of groundwater. Groundwater was not encountered in any of the borings for the short duration the boreholes were allowed to remain open. Based on our short-term observations, seepage into shallow excavations is not anticipated at this site. However, groundwater levels fluctuate over time and should be evaluated at the time of construction. The contractor is responsible for employing appropriate dewatering methods to control seepage and facilitate construction.

City of Dublin
OHIO, USA
Approved for Construction
BP13-00400040
04/12/13

This summary should be used in conjunction with the entire report for design purposes. It should be recognized that details were not included or fully developed in this section, and the report must be read in its entirety for a comprehensive understanding of the items contained herein. Section **5.0 GENERAL COMMENTS** should be read for an understanding of the report limitations.

City of Dublin
OHIO, USA
Approved for Construction
BP13-00400040
04/12/13

GEOTECHNICAL ENGINEERING REPORT
ASSISTED LIVING AND SKILLED NURSING BUILDING
VRABLE HEALTHCARE CENTER
DUBLIN, OHIO

Terracon Project No. N4125218
January 14, 2013

1.0 INTRODUCTION

Terracon Consultants, Inc. has completed a geotechnical exploration for the proposed Assisted Living and Skilled Nursing Building – Vrable Healthcare Center to be located near the southwest corner of Tuller Road and Tuller Ridge Drive in Dublin, Ohio. Fifteen (15) borings, designated B-1 through B-12 and P-1 through P-3, were performed to depths ranging from approximately 8.7 to 20 feet below the existing ground surface in the proposed building and pavement areas. Logs of the borings and a boring location plan are included in Appendix A of this report.

The purpose of these services is to provide information and geotechnical engineering recommendations relative to:

- subsurface soil conditions
- groundwater conditions
- earthwork
- pavement design and construction
- foundation design and construction
- floor slab design and construction
- seismic considerations

2.0 PROJECT INFORMATION

2.1 Project Description

Item	Description
Site layout	See Appendix A, Exhibit A-3: Boring Location Plan
Structures	The proposed facility will include the following: ▪ A central area with structural steel framing, EPDM roof, and aluminum curtail wall glazing system. ▪ Two 1-story slab-on-grade nursing wings with wood stud/wood truss construction ▪ One 2-story nursing wing with slab-on-grade and precast concrete plank floors, concrete masonry bearing walls, metal stud walls, and roof trusses. ▪ One 2-story assisted living wing with slab-on-grade and

City of Dublin
OHIO, USA
Approved for Construction
BP13-00400040
04/12/13

Item	Description
	precast concrete plank floors, concrete masonry bearing walls, metal stud walls, and wood roof trusses.
Finished floor elevation	The first floor finished floor elevation is planned to be at elevation 842 feet; the lower level floor will be at elevation 830 feet.
Maximum loads	Structural loading has not been provided.
Grading	The site grading scheme is anticipated to consist of up to 5 feet of cut and 9 feet of fill.
Pavements	New parking lot and drive areas are planned to the north, west, and south of the facility.

2.2 Site Location and Description

Item	Description
Location	This project will be located near the southwest corner of the intersection of Tuller Road and Tuller Ridge Drive in Dublin, Ohio.
Existing improvements	Vacant lot.
Current ground cover	Grass, underbrush, and some mature tree growth.
Existing topography	Provided topographic survey information indicates the site generally slopes downward towards the west, ranging from approximately elevation 845 feet near the northeast portion to 815 feet near the southwest corner of the site.

3.0 SUBSURFACE CONDITIONS

3.1 Typical Profile

Based on the results of the borings, subsurface conditions on the project site can be generalized as follows:

Description	Approximate Depth to Bottom of Stratum (feet)	Material Encountered	Consistency/Density/ Hardness
Surface	2 to 10 inches	Topsoil	N/A

City of Dublin
OHIO, USA
Approved for Construction
BP13-00400040
04/12/13

Description	Approximate Depth to Bottom of Stratum (feet)	Material Encountered	Consistency/Density/ Hardness
Fill	0.8 to 8 (Borings B-2, B-6, and B-7 only)	Fill consisting of cohesive soils: sandy lean clay and lean clay containing varying amounts of organics, glass, brick, and aluminum fragments Fill consisting of granular soils: silty gravel and clayey gravel containing varying amounts of organics, concrete, and brick fragments	Clay: soft to stiff Gravel: loose
Native fine-grained and granular soils	3 to 13.2 (Boring B-9 terminates in this layer)	Native cohesive fine-grained soils: sandy lean clay, lean clay, and fat clay Native non-cohesive fine-grained soils: sandy silt Native granular soils: clayey sand	Sand and silt: medium dense Clay: medium stiff to very stiff
Native granular soils (severely to completely weathered bedrock)	9 to greater than 18.6 feet (Borings B-1, B-3, B-4, B-6, B-7, B-10, P-1, P-2, and P-3 terminate in this layer)	Native granular soils: silty sand, silty gravel, clayey gravel, and poorly graded gravel containing varying amounts of sand, gravel, boulders, and limestone layers	Gravel and sand: medium dense to very dense
Bedrock	Greater than 20 feet – Borings B-2, B-5, and B-8 terminate in this layer at 20 feet	Limestone bedrock	Hard (rock hardness)

Conditions encountered at each boring location are indicated on the individual boring logs. Stratification boundaries on the boring logs represent the approximate location of changes in soil types; in situ, the transition between materials may be gradual.

3.2 Water Level Observations

The borings were observed while drilling and immediately after completion for the presence and level of groundwater. The subsurface water levels observed at these times are indicated on the boring logs in Appendix A and are summarized in the following table.

City of Dublin
OHIO, USA
Approved for Construction
BP13-00400040
04/12/13

Boring Number	Observed Water Depth (feet)[1]	
	While Drilling	After Drilling
B-1	N/E	N/E (DCI at 15)
B-2	5.5	5 (WCI at 8)
B-3	N/E	N/E (DCI at 10)
B-4	N/E	N/E (DCI at 14.5)
B-5	N/E	N/E (WCI at 9)
B-6	N/E	N/E (DCI at 6)
B-7	N/E	N/E (DCI at 7)
B-8	N/E	11 (WCI at 13)
B-9	N/E	N/E (DCI at 10.5)
B-10	N/E	N/E (DCI at 8)
P-1	N/E	N/E (DCI at 5)
P-2	N/E	N/E (DCI at 9)
P-3	N/E	N/E (DCI at 6)

[1] Below existing grade
N/E – Not Encountered
DCI – Dry cave-in condition noted at listed depth after auger casing removed
WCI – Wet cave-in condition noted at listed depth after auger casing removed

The boreholes were observed while drilling and after completion for the presence and level of groundwater. Groundwater was encountered in Borings B-2 and B-8 at depths of about 5 to 11 feet below existing grade. Groundwater was not encountered in the remainder of the borings for the short duration the boreholes were allowed to remain open. Based on our short-term observations, seepage into shallow excavations does not appear to be a significant issue at this site.

Groundwater level fluctuations occur due to seasonal variations in the amount of rainfall, runoff and other factors not evident at the time the borings were performed. In addition, perched or trapped water can develop over low permeability soils or within existing fill materials. Therefore, groundwater levels during construction or at other times in the life of the structure may be higher or lower than the levels indicated on the boring logs. The possibility of groundwater level fluctuations should be considered when developing the design and construction plans for the project.

City of Dublin
OHIO, USA
Approved for Construction
BP13-00400040
04/12/13

4.0 RECOMMENDATIONS FOR DESIGN AND CONSTRUCTION

4.1 Geotechnical Considerations

The recently completed test borings indicated the presence of fill consisting of cohesive and granular soils with loose relative density (granular soils) or soft to stiff consistency (cohesive soils) to a depth of approximately 0.8 to 8 feet below existing grade. The fill exhibited variable consistency and relative density and contained varying amounts of organics, glass, aluminum, brick, and concrete fragments. Beneath the fill, native cohesive soils with medium stiff to very stiff consistency, and native non-cohesive fine-grained and granular soils with medium dense to very dense relative density were encountered to a depth of about 9 to 18.6 feet beneath existing grades, underlain by limestone bedrock with hard hardness to the termination depth of the borings.

Based on the borings, the fill is not suitable for direct support of building foundations and slab-on-grade floors due to the potential for excessive total and differential settlement response. The proposed building structure can be supported on shallow spread footings. However, the shallow foundation excavations should extend through the existing fill and bear on the underlying native cohesive soils of at least medium stiff consistency, native non-cohesive fine-grained soils or native granular soils of at least medium dense relative density, bedrock, or on structural fill or lean concrete that extends to acceptable bearing materials. Existing fill should also be completely removed to expose the native soil subgrade in areas receiving new structural fill placement.

To provide for suitable subgrades for floor slab and pavement support, we recommend that a complete undercut and replacement of the existing fill be undertaken in areas where the fill is exposed at the floor slab design subgrade level, and a partial undercut and replacement of the existing fill be undertaken in areas where the fill is exposed at the pavement design subgrade level. The undercut in pavement areas should extend to a depth of at least 3 feet below the design subgrade elevation in drive and parking areas. Fill was encountered in Borings B-2, B-6, and B-7. As discussed below, the upper 18 inches should consist of Low Volume Change Material conforming to the requirements in section **4.2.2 Structural Fill Material Requirements**.

Support of pavements on or above existing fill soils is discussed in this report. However, even with the recommended construction testing, there is a risk that unsuitable materials within or buried by the fill will not be discovered. This risk cannot be eliminated without removing the fill, but can be reduced by thorough exploration and testing during construction.

The near surface native cohesive soils contained moderately to highly plastic soils. Due to the potential for shrink-swell action, these soils are not suitable for direct floor slab support. A

City of Dublin
OHIO, USA
Approved for Construction
BP13-00400040
04/12/13

such, in this report we provide recommendations for developing a subgrade suitable for floor slab support by providing a minimum 18 inch thick layer of structural fill constructed of Low Volume Change Material below the aggregate base of the new floor slab. Requirements for Low Volume Change Material are provided in section **4.2.2 Structural Fill Material Requirements** and details for floor slab subgrade preparation are provided in section **4.5 Floor Slab**.

Soils prone to shrink/swell characteristics are present on this site. This report provides recommendations to help mitigate the effects of soil shrinkage and swell. However, even if these procedures are followed, some movement and cracking in the structure should be anticipated. The severity of cracking and other damage such as uneven floor slabs will probably increase if any modification of the site results in excessive wetting or drying of the shrink/swell prone soils. Eliminating the risk of movement and distress may not be feasible, but it may be possible to further reduce the risk of movement if significantly more expensive measures are used during construction. We would be pleased to discuss other construction alternatives with you upon request.

It is anticipated the decomposed, severely weathered bedrock can be mechanically ripped. Deeper excavation into the bedrock will require the use of heavy-duty excavation equipment. Drilling and blasting will be required to facilitate rock break-up and removal may also be required in deeper, more competent rock. Jack-hammering may be required in utility excavations where working space will be limited. Consideration should be given to the location and invert elevations of utilities planned for the project to reduce the impacts of difficult excavation. Final elevations should be chosen to reduce the amount of potential bedrock excavation.

The borings were observed while drilling and immediately after completion for the presence and level of groundwater. Groundwater was not encountered in any of the borings for the short duration the boreholes were allowed to remain open. Based on our short-term observations, seepage into shallow excavations is not anticipated at this site. However, groundwater levels fluctuate over time and should be evaluated at the time of construction. The contractor is responsible for employing appropriate dewatering methods to control seepage and facilitate construction.

Our geotechnical recommendations are presented in the sections that follow.

4.2 Earthwork

Provided topographic survey information indicates the existing ground surface generally slopes downward towards the west, ranging from approximately elevation 845 feet near the northeast portion to 815 feet near the southwest corner of the site. Based on preliminary information, it appears up to 5 feet of cut and 9 feet of fill would need to be performed to establish the proposed finished grades.

City of Dublin
OHIO, USA
Approved for Construction
BP13-00400040
04/12/13

4.2.1 Initial Site Grading and Preparation

As an initial measure of site preparation, any topsoil, vegetation, or other surficial deleterious material (e.g. debris, desiccated soil, frozen soil, etc.) should be completely stripped to expose the underlying soil subgrade in areas that will receive fill or support buildings and pavements. The required depth of removal should be determined in the field by a representative of the geotechnical engineer.

Removal and/or relocation of any "to be abandoned" utilities, as well as installation of new underground utilities, should be performed once the topsoil and any deleterious material is removed. Any abandoned underground pipes left in place should be fully grouted. Excavations created due to utility relocations should be backfilled with granular structural fill material, placed and compacted in accordance with the recommendations provided in the following paragraphs, or with lean concrete or flowable fill. If lean concrete is used as backfill, the contractor should refer to all of the new build Mechanical-Electrical-Plumbing (MEP) and foundation drawings to confirm that the concrete backfill materials will not conflict with any new item installations or construction.

To provide for suitable subgrades for floor slab and pavement support, we recommend that a complete undercut and replacement of the existing fill be undertaken in areas where the fill is exposed at the floor slab design subgrade level, and a partial undercut and replacement of the existing fill be undertaken in areas where the fill is exposed at the pavement design subgrade level. The undercut in pavement areas should extend to a depth of at least 3 feet below the design subgrade elevation in drive and parking areas.

Additionally, existing fill in areas of to receive new structural fill should be completely removed to expose native soil suitable for placement of new structural fill.

After performing the initial site preparation activities and performing the recommended undercut, the exposed soils within the limits of the proposed building and pavement areas should be proofrolled in the presence of a representative of the geotechnical engineer. The exposed cohesive soils should be proofrolled with a fully loaded, tandem axle dump truck or other suitable equipment weighing at least 20 tons. Granular soils, where encountered, should be proofrolled with several passes of a vibratory roller (minimum dead weight of 8 tons on the drum).

Any soft, loose or yielding areas encountered during proofrolling operations should be undercut to expose firm stable soils or reworked in place to a stable acceptable condition. It should be noted that undercut depths somewhat greater than normal may be needed if the construction occurs during periods of inclement weather. The actual amount of undercut would need to be determined in the field during construction and is dependent on weather conditions and equipment used in the construction.

City of Dublin
OHIO, USA
Approved for Construction
BP13-00400040
04/12/13

The rough soil subgrade elevation should be established with quality controlled cohesive or granular fill placed and compacted in accordance with requirements provided in section **4.2.2 Structural Fill Material Requirements** and section **4.2.3 Structural Fill Placement and Compaction Requirements**.

Fill operations should commence at the lowest part of the slope in the proposed fill areas. All existing fill should be completely removed to expose the native soil subgrade. The structural fill should be placed in near horizontal lifts and should be adequately benched into the slope in accordance with the criteria discussed below. Slope benches should expose competent native soils.

Existing slopes that are 5H:1V or steeper should be benched horizontally into suitable native soils after removal of surficial unsuitable soils. These soil benches should be wide enough for construction equipment and configured on a 2H:1V bench width-to-height ratio. This construction measure is recommended to allow all structural fill to be keyed into the sloping ground surface. The finished grades should then be established with quality controlled structural fill.

4.2.2 Structural Fill Requirements

Structural fill should meet the following material property requirements:

Fill Type [1]	USCS Classification	Acceptable Location for Placement
Lean clay	CL (LL<40)	All locations and elevations
Lean to fat clay [2]	CL/CH (40<LL<50)	> 1.5 feet below structure finished grade unless tested and meets low volume change material criteria
Fat clay	CH (LL>50)	Not recommended for use as structural fill
Well graded granular	SW, GW [3]	All locations and elevations
Low Volume Change Material [4]	CL (LL<40 & PI<22) or SW, GW [3]	All locations and elevations
On-Site Soils	Various	The on-site soils generally appear suitable for use as structural fill; however, any fill placed should meet the low volume change requirements and be free of deleterious materials such as organics and rock fragments larger than 6 inches; also significant moisture conditioning of the existing cohesive soils will be required prior to its use as a structural fill material.

1. Controlled, compacted fill should consist of approved materials that are free of organic matter and

City of Dublin
OHIO, USA
Approved for Construction
BP13-00400040
04/12/13

debris. Frozen material should not be used, and fill should not be placed on a frozen subgrade. A sample of each material type should be submitted to the geotechnical engineer for evaluation.

2. Delineation of lean to fat clay should be performed in the field by a qualified geotechnical engineer or their representative.
3. Crushed limestone aggregate, limestone screenings, or granular material such as sand, gravel or crushed stone containing at least 18% low plasticity fines.
4. Low plasticity cohesive soil or granular soil having at least 18% low plasticity fines.

4.2.3 Structural Fill Placement and Compaction Requirements

Item	Description
Fill Lift Thickness (Structural Areas)	8 inches or less in loose thickness if heavy, self-propelled compaction equipment is used 4 inches or less if hand compaction equipment used
Minimum Compaction Requirements [1] (Structural Areas)	Minimum 98% of the material's Standard Proctor maximum dry density (ASTM D 698)
Minimum Compaction Requirements (Landscape Areas)	Minimum 95% of Standard Proctor maximum dry density (ASTM D 698) provided long-term plans do not include a structure in these areas
Moisture Content - Cohesive Soil (Low Plasticity) (Landscape Areas)	Within ±3% of optimum moisture content (OMC) as determined by the Standard Proctor test at the time of placement and compaction
Moisture Content [2] - Granular Material	Workable moisture levels

1. Should the results of the in-place density tests indicate the specified moisture or compaction limits have not been met, the area represented by the test should be reworked and retested as required until the specified moisture and compaction requirements are achieved.
2. Specifically, moisture levels should be maintained low enough to allow for satisfactory compaction to be achieved without the cohesionless fill material pumping when proofrolled.
3. All materials to be used as structural fill should be tested in the laboratory to determine their suitability and compaction characteristics.

4.2.4 Utility Trench Backfill

All trench excavations should be made with sufficient working space to permit construction including backfill placement and compaction. Small compaction equipment, such as a vibratory plate, jumping jack or walk-behind vibratory roller may be necessary. In these cases, compactive energy levels are lower and require smaller lift thicknesses to achieve compaction throughout the lift. Lift thicknesses should be maintained at 4 inches or less when using these types of small compaction equipment and the backfill should be compacted to the same criteria as presented for structural fill.

City of Dublin
OHIO, USA
Approved for Construction
BP13-00400040
04/12/13

Compaction requirements for bedding and backfilling around utilities may need to be adjusted to the pipe material type and the pipe manufacturer's bedding and backfill material recommendations.

Utility trenches are a common source of water infiltration and migration. All utility trenches that penetrate beneath the building area should be effectively sealed to restrict water intrusion and flow through the trenches that could migrate below the structure.

4.2.5 Grading and Drainage

During construction, grades should be developed to direct surface water flow away from or around the site. Exposed subgrades should be sloped to provide positive drainage so that saturation of subgrades is avoided. Surface water should not be permitted to accumulate on the site.

Final surrounding grades should be sloped away from the structure on all sides to prevent ponding of water. Gutters and downspouts that drain water a minimum of 10 feet beyond the footprint of the proposed structure are recommended. This can be accomplished through the use of splash-blocks, downspout extensions, and flexible pipes that are designed to attach to the end of the downspout. Flexible pipe should only be used if it is daylighted in such a manner that it gravity-drains collected water. Splash-blocks should also be considered below hose bibs and water spigots.

Groundwater seepage may also occur during the excavation and construction of the proposed building. Trapped water infiltration or groundwater seepage may be encountered, particularly after periods of precipitation. In such an event, sump and pumping methods may be used for temporary dewatering.

For cut or fill slopes, side slopes of 3H:1V or flatter are preferred and recommended to reduce the potential for surface sloughing, provided structural fill is placed in accordance with the recommendations provided in this report. The crest of cut and fill slopes should be at least 10 feet away from the proposed edge of any structure or pavement. Design of slopes should consider measures to collect surface water runoff, removing sloughed material, and perform general slope maintenance. Slopes should be seeded or sodded as soon as practical.

4.2.6 Earthwork Construction Considerations

Although the exposed subgrade is anticipated to be relatively stable upon initial exposure, unstable subgrade conditions could develop during general construction operations, particularly if the soils are wetted and/or subjected to repetitive construction traffic. The use of light construction equipment would aid in reducing subgrade disturbance. The use of remotely operated equipment, such as a backhoe, would be beneficial to perform cuts and reduce subgrade disturbance, particularly in silts and silty sand soils. Should unstable subgrade conditions develop, stabilization measures will need to be employed.

City of Dublin
OHIO, USA
Approved for Construction
BP13-00400040
04/12/13

Upon completion of filling and grading, care should be taken to maintain the subgrade moisture content prior to construction of floor slabs and pavements. Construction traffic over the completed subgrade should be avoided to the extent practical. The site should also be graded to prevent ponding of surface water on the prepared subgrades or in excavations. If the subgrade should become frozen, desiccated, saturated, or disturbed, the affected material should be removed or these materials should be scarified, moisture conditioned, and recompacted prior to floor slab or possible pavement construction.

It is anticipated the decomposed, severely weathered bedrock can be mechanically ripped. Deeper excavation into the bedrock will require the use of heavy-duty excavation equipment. Drilling and blasting will be required to facilitate rock break-up and removal may also be required in deeper, more competent rock. Jack-hammering may be required in utility excavations where working space will be limited.

All excavations should comply with applicable local, state and federal safety regulations, including the current Occupational Health and Safety Administration (OSHA) Excavation and Trench Safety Standards. As a minimum, any temporary excavations should be sloped or braced as required by current OSHA regulations to provide stability and safe working conditions. Temporary excavations may be required during grading operations and installation of utilities. The grading contractor, by his contract, is usually responsible for designing and constructing stable, temporary excavations and should shore, slope or bench the sides of the excavations as required, to maintain stability of both the excavation sides and bottom.

Under no circumstances should the information provided in this report be interpreted to mean that Terracon is responsible for construction site safety or the contractor's activities. Construction site safety is the sole responsibility of the contractor, who shall also be solely responsible for the means, methods, and sequencing of the construction operations.

The geotechnical engineer should be retained during the construction phase of the project to observe earthwork and to perform necessary tests and observations during subgrade preparation; proofrolling; placement and compaction of controlled compacted fills; backfilling of excavations into the completed subgrade, and just prior to construction of building floor slabs.

4.3 Foundations

The proposed building structure can be supported on shallow spread footings. It is anticipated footings for the nursing wings and assisted living wing will bear on soil, but the footings for the central area of the facility may bear on bedrock.

It is recommended that new building footings/foundations completely penetrate any fill and bear on the underlying native cohesive soils of at least medium stiff consistency, on native granular

City of Dublin
OHIO, USA
Approved for Construction
BP13-00400040
04/12/13

soils of at least medium dense relative density, bedrock, or newly placed structural fill or lean concrete that extends to suitable native soil. Where existing undocumented fill or other unsuitable conditions are encountered at the design footing bearing depth, the remedial methods recommended in section **4.3.2 Foundation Construction Considerations** should be implemented. Design recommendations for shallow foundations to support the proposed building are presented below.

4.3.1 Foundation Design Recommendations

The following table represents design recommendations for foundations associated with the building anticipated for this site.

Description	Column	Wall
Net allowable bearing pressure [1]	3,000 psf	3,000 psf
Minimum dimensions	30 inches	18 inches
Minimum embedment below finished grade for frost protection [2]	36 inches	36 inches
Approximate total settlement [3]	<1 inch	<1 inch
Estimated differential settlement	½ inch between columns	½ inch over 40 feet

1. The recommended net allowable bearing pressure is the pressure in excess of the minimum surrounding overburden pressure at the footing base elevation. Assumes any unsuitable or soft soils, if encountered, will be undercut and replaced with structural fill.
2. and to reduce the effects of seasonal moisture variations in the subgrade soils. For perimeter footing and footings beneath unheated areas.
3. The foundation settlement will depend upon the variations within the subsurface soil profile, the structural loading conditions, the embedment depth of the footings, the thickness of compacted fill, and the quality of the earthwork operations.

We also recommend that the building foundations be suitably reinforced to resist movement from potential differential settlement. Walls and slabs should incorporate control joints to minimize effects of differential settlement, particularly where significant cut/fill transitions will occur or where foundations transition from bearing upon bedrock to bearing upon soil.

Foundation excavations should be observed by the geotechnical engineer. If the soil conditions encountered differ significantly from those presented in this report, supplemental recommendations will be required.

4.3.2 Foundation Construction Considerations

Footing excavations in bedrock should be over-excavated at least 6 inches below the design bearing level. The over-excavation should extend laterally a sufficient distance to provide a bond break with the sides of the footing excavation. The side-of-footing bond break can consist of insulation board, plywood, or some other rigid material that will prevent fresh concrete from

City of Dublin
OHIO, USA
Approved for Construction
BP13-00400040
04/12/13

creating a cold joint with the irregular surface on the side of the footing excavation (in the rock). Therefore the rock excavation should be made wide enough to allow for the footing to be formed.

The base of the over-excavation should be backfilled with compacted, well graded, crushed limestone aggregate meeting ODOT 304 materials specification to establish the design footing elevation. Placement and compaction should be in accordance with recommendations provided in section **4.2 Earthwork** of this report. A minimum 6-inch thick layer of the ODOT 304 aggregate material should also be placed on top of any of any lean concrete backfill placed in foundation excavations.

The base of each foundation excavation should be free of water and loose or soft soil, or rock fragments prior to placing concrete. Concrete should be placed as soon after excavating as possible to reduce bearing soil disturbance. If the soils at bearing level become excessively dry, disturbed, saturated, or frozen, the affected soil should be removed prior to placing concrete. Placement of a lean concrete mud-mat over the bearing soils should be considered if the excavations must remain open overnight or for an extended period of time.

If unsuitable bearing soils are encountered in footing excavations, the excavation could be extended deeper to suitable soils and the footing could bear directly on these soils at the lower level, or on lean concrete backfill placed in the excavations. As an alternative, the footings could also bear on properly compacted structural backfill extending down to the suitable soils. Overexcavation for compacted structural fill placement below footings should extend laterally beyond all edges of the footings at least 8 inches per foot of overexcavation depth below footing base elevation. The overexcavation should then be backfilled up to the footing base elevation with well graded granular material placed in lifts of 8 inches or less in loose thickness (6 inches or less if using hand-guided compaction equipment) and compacted to at least 98 percent of the material's standard Proctor maximum dry density (ASTM D 698). The overexcavation and backfill procedure is described in the following figure.

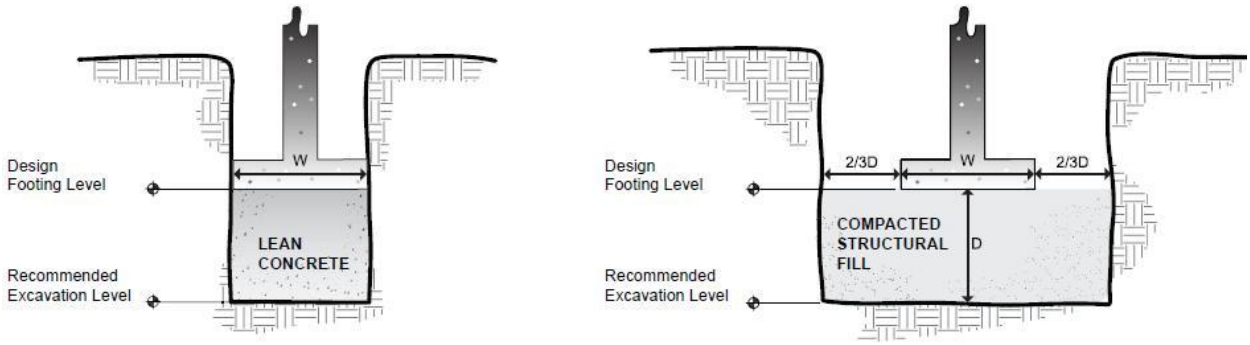

Lean Concrete Backfill **Overexcavation / Backfill**

NOTE: Excavations in sketches shown vertical for convenience. Excavations should be sloped as necessary for safety.

City of Dublin
OHIO, USA
Approved for Construction
BP13-00400040
04/12/13

4.4 Seismic Considerations

Code Used	Site Classification
Ohio Building Code (OBC) [1]	C [2]

1. In general accordance with the *OBC,* Table 1613.5.2.
2. The OBC requires a site soil profile determination extending a depth of 100 feet for seismic site classification. Borings for this study extended to a maximum depth of approximately 20 feet and this seismic site class definition considers that limestone bedrock continues below the maximum depth of the subsurface exploration. Additional exploration to deeper depths could be performed to confirm the conditions below the current depth of exploration. Alternatively, a geophysical exploration could be utilized in order to attempt to justify a higher seismic site class. The current scope requested does not include the required 100 foot soil profile determination.

4.5 Floor Slab

4.5.1 Design Recommendations

ITEM	DESCRIPTION
Floor slab support	Minimum 18-inch low volume change zone and special subgrade preparation is required [1]
Modulus of subgrade reaction	110 pounds per square inch per inch (psi/in) for point loading conditions
Aggregate base course/capillary break [2]	Minimum 4 inches of free draining granular material

1. Floor slabs should be structurally independent of any building footings or walls to reduce the possibility of floor slab cracking caused by differential movement between the slab and foundation. Narrower, turned-down slab-on-grade foundations may be utilized at the approval of the structural engineer. The slabs should be appropriately reinforced to support the proposed loads.

   Due to the moderate to high shrink-swell potential of the fat clay subgrade soils, we recommend a low volume change layer be developed below the floor slab. This layer should be at least 18 inches thick and should meet the Low Volume Change Material criteria outlined in this report in section **4.2 Earthwork**.

   We recommend subgrades be maintained in a relatively moist condition until floor slabs are constructed. If the subgrade should become desiccated prior to construction of floor slabs, the affected material should be removed or the materials scarified, moistened, and recompacted. Upon completion of grading operations in the building areas, care should be taken to maintain the recommended subgrade moisture content and density until construction of the building floor slabs.
2. The floor slab design should include a capillary break, comprised of free-draining, compacted, granular material at least 4 inches thick and can be considered as part of the low volume change zone. Free-draining granular material should have less than 5 percent fines (material passing the #200 sieve). Other design considerations such as cold temperatures and condensation development could warrant more extensive design provisions.

City of Dublin
OHIO, USA
Approved for Construction
BP13-00400040
04/12/13

Where appropriate, saw-cut control joints should be placed in the slab to help control the location and extent of cracking. For additional recommendations refer to the ACI Design Manual. Joints or any cracks that develop should be sealed with a water-proof, non-extruding compressible compound specifically recommended for heavy duty concrete pavement and wet environments.

The use of a vapor retarder should be considered beneath concrete slabs on grade that will be covered with wood, tile, carpet or other moisture sensitive or impervious coverings, or when the slab will support equipment sensitive to moisture. When conditions warrant the use of a vapor retarder, the slab designer should refer to ACI 302 and/or ACI 360 for procedures and cautions regarding the use and placement of a vapor retarder.

4.5.2 Floor Slab Construction Considerations

On most project sites, the site grading is generally accomplished early in the construction phase. However as construction proceeds, the subgrade may be disturbed due to utility excavations, construction traffic, desiccation, rainfall, etc. As a result, the floor slab subgrade may not be suitable for placement of aggregate base and concrete and corrective action will be required.

We recommend the area underlying the floor slab be rough graded and then thoroughly proofrolled using a vibratory roller (minimum dead weight of 8 tons on the drum) for granular soils, or a fully loaded, tandem axle dump truck weighing at least 20 tons for cohesive soils prior to final grading and placement of aggregate base. Particular attention should be paid to high traffic areas that were rutted and disturbed earlier and to areas where backfilled trenches are located. Areas where unsuitable conditions are located should be repaired by removing and replacing the affected material with properly compacted fill. All floor slab subgrade areas should be moisture conditioned and properly compacted to the recommendations in this report immediately prior to placement of the aggregate base and concrete.

4.6 Pavements

4.6.1 Subgrade Preparation

On most project sites, the site grading is accomplished relatively early in the construction phase. Fills are placed and compacted in a uniform manner. However, as construction proceeds, excavations are made into these areas, rainfall and surface water saturates some areas, heavy traffic from concrete trucks and other delivery vehicles disturbs the subgrade and many surface irregularities are filled in with loose soils to temporarily improve trafficability. As a result, the pavement subgrades, initially prepared early in the project, should be carefully evaluated as the time for pavement construction approaches.

City of Dublin
OHIO, USA
Approved for Construction
BP13-00400040
04/12/13

We recommend the moisture content and density of the upper 9 inches of the subgrade be evaluated and the pavement subgrades be proofrolled within two days prior to commencement of actual paving operations. Areas not in compliance with the required ranges of moisture or density should be moisture conditioned and recompacted. Particular attention should be paid to high traffic areas that were rutted and disturbed earlier and to areas where backfilled trenches are located. Areas where unsuitable conditions are located should be repaired by removing and replacing the materials with properly compacted fills.

After proofrolling and repairing deep subgrade deficiencies, the entire subgrade should be scarified and developed as recommended in section **4.2 Earthwork** to provide a uniform subgrade for pavement construction. Areas that appear severely desiccated following site stripping may require further undercutting and moisture conditioning. If a significant precipitation event occurs after the evaluation or if the surface becomes disturbed, the subgrade should be reviewed by qualified personnel immediately prior to paving. The subgrade should be in its finished form at the time of the final review.

4.6.2 Design Considerations

Based on the borings and assuming limited site grading activities, we anticipate the on-site low plasticity soils (cohesive as well as non-cohesive) and structural fill similar to these soils, will be present at design subgrade elevations. A CBR value of 3 has been estimated for preliminary design purposes. This value needs to be verified by performing additional laboratory tests (Laboratory CBR) of the representative soil subgrade samples as the project progresses into final design and construction phase.

To obtain this CBR value in the field, the pavement subgrade should be compacted to at least 98 percent of the standard Proctor density within -3 to +3 percent of its optimum moisture. Proofrolling and re-compacting the subgrade is recommended immediately prior to stone base placement. Soft or weak areas delineated by the proof-rolling operations should be undercut or stabilized in-place to achieve the appropriate subgrade support.

Traffic patterns and anticipated loading conditions were not available at the time that this report was prepared. However, we anticipate that traffic loads will be produced primarily by automobile traffic and occasional delivery and trash removal trucks. The thickness of pavements subjected to heavy truck traffic should be determined using expected traffic volumes, vehicle types, and vehicle loads and should be in accordance with local, city or county ordinances.

Pavement thickness can be determined using AASHTO, Asphalt Institute and/or other methods if specific wheel loads, axle configurations, frequencies, and desired pavement life are provided. Terracon can provide thickness recommendations for pavements subjected to loads other than personal vehicles and occasional delivery and trash removal truck traffic if this information is provided.

City of Dublin
OHIO, USA
Approved for Construction
BP13-00400040
04/12/13

For areas subject to concentrated and repetitive loading conditions such as dumpster pads or loading dock areas, we recommend the use of a Portland Cement Concrete (PCC) pavement. For areas where PCC pavements are planned, a subgrade modulus of 110 pci may be used for pavement design purposes.

Pavement performance is affected by its surroundings. In addition to providing preventive maintenance, the civil engineer should consider the following recommendations in the design and layout of pavements:

- Final grade adjacent to parking lots and drives should slope down from pavement edges at a minimum 2%;
- The subgrade and the pavement surface should have a minimum ¼ inch per foot slope to promote proper surface drainage;
- Install pavement drainage surrounding areas anticipated for frequent wetting;
- Install joint sealant and seal cracks immediately;
- Seal all landscaped areas in, or adjacent to pavements to reduce moisture migration to subgrade soils;
- Place compacted, low permeability backfill against the exterior side of curb and gutter; and,
- Place curb, gutter and/or sidewalk directly on clay subgrade soils rather than on unbound granular base course materials.

4.6.3 Pavement Drainage

Pavements should be sloped to provide rapid drainage of surface water. Water allowed to pond on or adjacent to the pavements could saturate the subgrade and contribute to premature pavement deterioration. In addition, the pavement subgrade should be graded to provide positive drainage within the granular base section. Appropriate sub-drainage or connection to a suitable daylight outlet should be provided to remove water from the granular subbase.

4.6.4 Pavement Maintenance

Preventive maintenance should be planned and provided for through an on-going pavement management program. Preventive maintenance activities are intended to slow the rate of pavement deterioration, and to preserve the pavement investment. Preventive maintenance consists of both localized maintenance (e.g. crack and joint sealing and patching) and global maintenance (e.g. surface sealing). Preventive maintenance is usually the first priority when implementing a planned pavement maintenance program and provides the highest return on investment for pavements. Prior to implementing any maintenance, additional engineering observation is recommended to determine the type and extent of preventive maintenance. Even with periodic maintenance, some movements and related cracking may still occur and repairs may be required.

City of Dublin
OHIO, USA
Approved for Construction
BP13-00400040
04/12/13

4.7 Lateral Earth Pressures

Reinforced concrete walls (e.g. retaining walls) with unbalanced backfill levels on opposite sides should be designed for earth pressures at least equal to those indicated in the following table. Earth pressures will be influenced by structural design of the walls, conditions of wall restraint, methods of construction and/or compaction and the strength of the materials being restrained. Two wall restraint conditions are shown. Active earth pressure is commonly used for design of free-standing cantilever retaining walls and assumes wall movement. The "at-rest" condition assumes no wall movement. The recommended design lateral earth pressures do not include a factor of safety and do not provide for possible hydrostatic pressure on the walls.

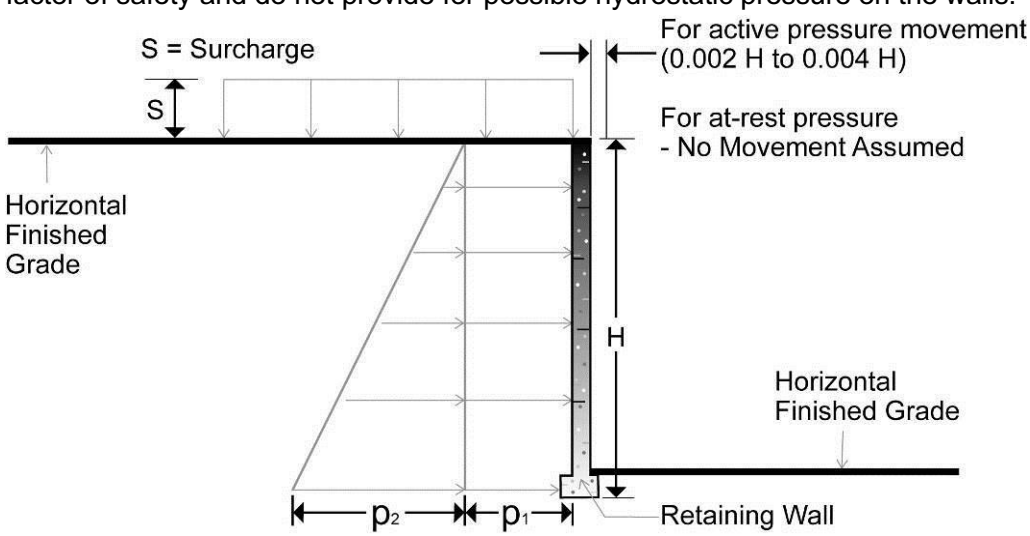

Earth Pressure Coefficients

Earth Pressure Conditions	Coefficient for Backfill Type	Equivalent Fluid Density (pcf)	Surcharge Pressure, p_1 (psf)	Earth Pressure, p_2 (psf)
Active (Ka)	Granular - 0.33 Lean Clay - 0.42	40 50	(0.33)S (0.42)S	(40)H (50)H
At-Rest (Ko)	Granular - 0.46 Lean Clay - 0.58	55 70	(0.46)S (0.58)S	(55)H (70)H
Passive (Kp)	Granular - 3.0 Lean Clay - 2.4	360 290	--- ---	--- ---

<u>Applicable conditions to the above include:</u>

- For active earth pressure, wall must rotate about the base, with top lateral movements of about 0.002 **H** to 0.004 **H**, where **H** is wall height

City of Dublin
OHIO, USA
Approved for Construction
BP13-00400040
04/12/13

- For passive earth pressure to develop, the wall must move horizontally to mobilize resistance
- Uniform surcharge, where S is surcharge pressure
- In-situ soil backfill weight a maximum of 120 pcf
- Horizontal backfill, compacted to at least 98 percent of standard Proctor maximum dry density
- Loading from heavy compaction equipment not included
- No hydrostatic pressures acting on wall
- No dynamic loading
- No safety factor included in soil parameters
- Ignore passive pressure in frost zone
- Fat clay and soils containing pyritic materials should not be used for backfill

Backfill placed against structures should consist of granular soils or low plasticity cohesive soils. For the granular values to be valid, the granular backfill must extend out from the base of the wall at an angle of at least 45 and 60 degrees from vertical for the active and passive cases, respectively. To calculate the resistance to sliding, a value of 0.35 should be used as the allowable coefficient of friction between the footing and the underlying soil.

To control hydrostatic pressure behind the wall, we recommend that a drain be installed at the foundation wall with a collection pipe leading to a reliable discharge. If this is not possible, then combined hydrostatic and lateral earth pressures should be calculated for lean clay backfill using an equivalent fluid weighing 90 and 100 pcf for active and at-rest conditions, respectively. For granular backfill, an equivalent fluid weighing 85 and 90 pcf should be used for active and at-rest conditions, respectively. These pressures do not include the influence of surcharge, equipment or floor loading, which should be added. Heavy equipment should not operate within a distance closer than the exposed height of retaining walls to prevent lateral pressures more than those provided.

5.0 GENERAL COMMENTS

Terracon should be retained to review the final design plans and specifications so comments can be made regarding interpretation and implementation of our geotechnical recommendations in the design and specifications. Terracon also should be retained to provide observation and testing services during grading, excavation, foundation construction and other earth-related construction phases of the project.

The analysis and recommendations presented in this report are based upon the data obtained from the borings performed at the indicated locations and from other information discussed in this report. This report does not reflect variations that may occur between borings, across the site, or due to the modifying effects of construction or weather. The nature and extent of such

City of Dublin
OHIO, USA
Approved for Construction
BP13-00400040
04/12/13

variations may not become evident until during or after construction. If variations appear, we should be immediately notified so that further evaluation and supplemental recommendations can be provided.

Support of floor slab and pavements on or above existing fill soils is discussed in this report. However, even with the recommended construction testing, there is a risk that unsuitable materials within or buried by the existing fill will not be discovered. This risk cannot be eliminated without removing the existing fill but can be reduced by thorough exploration and testing during construction.

The scope of services for this project does not include either specifically or by implication any environmental or biological (e.g., mold, fungi, bacteria) assessment of the site or identification or prevention of pollutants, hazardous materials or conditions. If the owner is concerned about the potential for such contamination or pollution, other studies should be undertaken.

This report has been prepared for the exclusive use of our client for specific application to the project discussed and has been prepared in accordance with generally accepted geotechnical engineering practices. No warranties, either express or implied, are intended or made. Site safety, excavation support, and dewatering requirements are the responsibility of others. In the event that changes in the nature, design, or location of the project as outlined in this report are planned, the conclusions and recommendations contained in this report shall not be considered valid unless Terracon reviews the changes and either verifies or modifies the conclusions of this report in writing.

City of Dublin
OHIO, USA
Approved for Construction
BP13-00400040
04/12/13

APPENDIX A
FIELD EXPLORATION

City of Dublin
OHIO, USA
Approved for Construction
BP13-00400040
04/12/13

Field Exploration Description

The subsurface exploration consisted of drilling and sampling fifteen (15) borings at the site to depths of about 8.7 to 20 feet below existing grades. The boring locations were staked in the field by Terracon personnel using existing site features as references. Elevations of the ground surface at each boring location were determined from the site location plan provided by JMM Architects. Ground surface elevations indicated on the boring logs are rounded to the nearest ½ foot. The locations and elevations of the borings should be considered accurate only to the degree implied by the means and methods used to define them. The approximate boring locations are indicated on the attached Boring Location Plan.

The borings were drilled with an ATV-mounted rotary drill rig using continuous flight hollow-stem augers to advance the boreholes. Samples of the soil encountered in the borings were obtained using the split barrel sampling procedures.

In the split-barrel sampling procedure, the number of blows required to advance a standard 2-inch O.D. split-barrel sampler the last 12 inches of the typical total 18-inch penetration by means of a 140-pound auto-hammer with a free fall of 30 inches, is the standard penetration resistance value (SPT-N). This value is used to estimate the in-situ relative density of cohesionless soils and consistency of cohesive soils.

An automatic SPT hammer was used to advance the split-barrel sampler in the borings performed on this site. A significantly greater efficiency is achieved with the automatic hammer compared to the conventional safety hammer operated with a cathead and rope. This higher efficiency has an appreciable effect on the SPT-N value. The effect of the automatic hammer's efficiency has been considered in the interpretation and analysis of the subsurface information for this report.

The samples were tagged for identification, sealed to reduce moisture loss, and taken to our laboratory for further examination, testing, and classification. Information provided on the boring logs attached to this report includes soil descriptions, consistency evaluations, boring depths, sampling intervals, and any groundwater conditions. The borings were backfilled with auger cuttings prior to the drill crew leaving the site.

A field log of each boring was prepared by the drill crew. These logs included visual classifications of the materials encountered during drilling, as well as, the driller's interpretation of the subsurface conditions between samples. Final boring logs included with this report represent the engineer's interpretation of the field logs and include modifications based on laboratory observation and tests of the samples.

City of Dublin
OHIO, USA
Approved for Construction
BP13-00400040
04/12/13

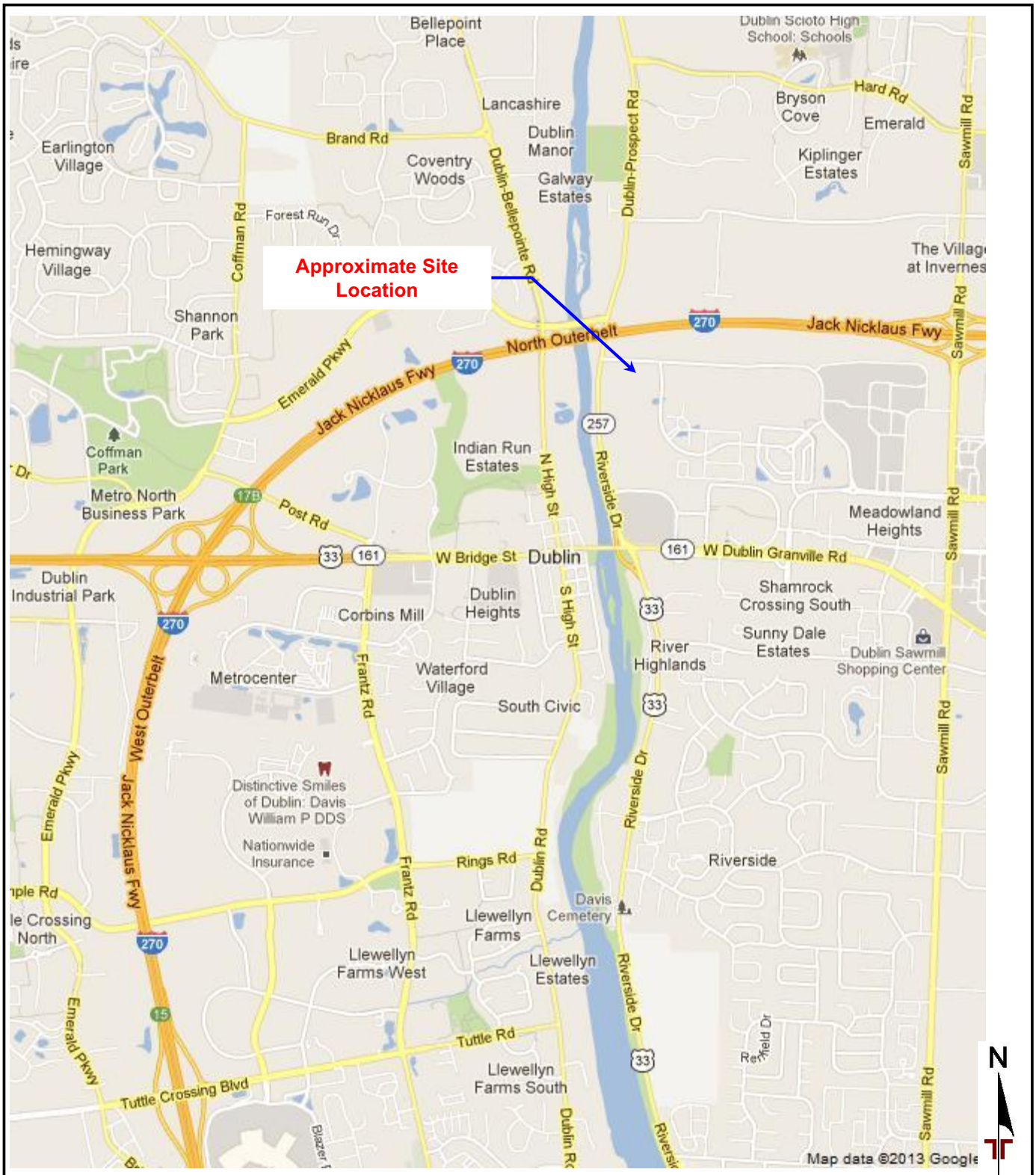

DIAGRAM IS FOR GENERAL LOCATION ONLY, AND IS NOT INTENDED FOR CONSTRUCTION PURPOSES

Project Manager: KME	Project No. N4125218	Terracon Consulting Engineers & Scientists	SITE LOCATION MAP
Drawn by: AKB	Scale: N.T.S.	790 Morrison Road Columbus, Ohio 43230	VRABLE HEALTHCARE CENTER
Checked by: KME	File Name: N4125218BLP	PH. (614) 863-3113 FAX. (614) 863-0475	TULLER RD. & TULLER RIDGE DR. DUBLIN, OHIO
Approved by: KME	Date: January 2013		Exhibit A-2

City of Dublin OHIO USA
Approved for Construction
BP13-00400040
04/12/13

APPROXIMATE BORING LOCATION

DIAGRAM IS FOR GENERAL LOCATION ONLY, AND IS NOT INTENDED FOR CONSTRUCTION PURPOSES

Project Manager: KME	Project No. N4125218	Terracon Consulting Engineers & Scientists	BORING LOCATION PLAN
Drawn by: AKB	Scale: N.T.S.	790 Morrison Road, Columbus, Ohio 43230	VRABLE HEALTHCARE CENTER
Checked by: KME	File Name: N4125218BLP	PH. (614) 863-3113 FAX. (614) 863-0475	TULLER RD. & TULLER RIDGE DR. DUBLIN, OHIO
Approved by: KME	Date: January 2013		Exhibit A-3

City of Dublin OHIO USA
Approved for Construction
BP13-00400040
04/12/13

BORING LOG NO. B-1

PROJECT: ----------

CLIENT: Vrable Land Holding Massillon, LLC

SITE: Tuller Road and Tuller Ridge Drive
Dublin, Ohio

LOCATION See Exhibit A-3

Surface Elev.: 835 (Ft.)

DEPTH	ELEVATION (Ft.)	DESCRIPTION
0.3	834.5	**TOPSOIL (4")**
		SANDY LEAN CLAY (CL), trace gravel, brown, stiff
3.0	832	**SILTY SAND WITH GRAVEL (SM)**, brown and gray, medium dense to very dense
18.0	817	***Auger Refusal at 18 Feet***

DEPTH (Ft.)	SAMPLE TYPE	RECOVERY (In.)	FIELD TEST RESULTS	WATER CONTENT (%)
		18	4-5-6 N=11	20
		18	7-12-17 N=29	
5		8	14-8-11 N=19	
		5	15-24-32 N=56	
10				
		18	19-12-12 N=24	
15				
20				
25				

WATER LEVEL OBSERVATIONS; LABORATORY TORVANE/HP (psf); STRENGTH TEST (TEST TYPE, COMPRESSIVE STRENGTH (psf), STRAIN (%)); ATTERBERG LIMITS (LL-PL-PI): not recorded.

Stratification lines are approximate. In-situ, the transition may be gradual.

Hammer Type: Automatic

Advancement Method:
Hollow Stem Auger

Abandonment Method:
Borings backfilled with soil cuttings upon completion.

Notes:

WATER LEVEL OBSERVATIONS

No water observed

Dry cave-in at 15 feet

Terracon
790 Morrison Road
Columbus, Ohio

Boring Started: 12/16/2012 | Boring Completed: 12/16/2012
Drill Rig: ATV | Driller: Hayslip
Project No.: N4125218 | Exhibit:

City of Dublin OHIO, USA
Approved for Construction
BP13-00400040
04/12/13

THIS BORING LOG IS NOT VALID IF SEPARATED FROM ORIGINAL REPORT. GEO LOG-DEPTH TO BOTTOM OF PAGE VRABLE HEALTHCARE FACILITY LOGS.GPJ TERRACON2012.GDT 1/14/13

BORING LOG NO. B-2

PROJECT: ----------

CLIENT: Vrable Land Holding Massillon, LLC

SITE: Tuller Road and Tuller Ridge Drive
Dublin, Ohio

LOCATION See Exhibit A-3

Surface Elev.: 827 (Ft.)

DEPTH	ELEVATION (Ft.)	Description
0.5	826.5	**TOPSOIL (6")**
3.0	824	**FILL - SANDY LEAN CLAY (CL)**, trace gravel, brown, medium stiff
5.5	821.5	**FILL - LEAN CLAY (CL)**, trace sand, brown, soft to medium stiff, noted organics, sticks and logs
8.0	819	**FILL - SANDY LEAN CLAY WITH GRAVEL (CL)**, brown, medium stiff to stiff, noted glass, brick and aluminum fragments
14.0	813	**SILTY GRAVEL WITH SAND (GM)**, brown, very dense, noted cobbles and limestone layers (severely to completely weathered bedrock)
20.0	807	**LIMESTONE**, gray, very thinly to thinly bedded, moderately to moderately severely weathered, hard, noted 2 inch granite layer
		Auger Refusal at 20 Feet

Depth (Ft.)	Recovery (In.)	Field Test Results	Laboratory Torvane/HP (psf)	Water Content (%)	Atterberg Limits LL-PL-PI
	18	5-5-3 N=8		17	
	4	0-0-1 N=1	1000 (HP)	23	
	13	5-6-8 N=14		20	28-19-9
	18	28-30-31 N=61			
	3	50/3" N=50/3"			
	8				
	19				

Water Level Observations: 5 feet

Stratification lines are approximate. In-situ, the transition may be gradual.

Hammer Type: Automatic

Advancement Method:
Hollow Stem Auger

Abandonment Method:
Borings backfilled with soil cuttings upon completion.

Notes:

WATER LEVEL OBSERVATIONS

- *Water initially observed at 5.5 feet*
- *Water observed at 5 feet after boring completion*
- *Wet cave-in at 8 feet*

Terracon
790 Morrison Road
Columbus, Ohio

Boring Started: 12/14/2012 | Boring Completed: 12/15/2012
Drill Rig: ATV | Driller: Hayslip
Project No.: N4125218 | Exhibit: A-3

City of Dublin OHIO, USA
Approved for Construction
BR13-00400040
04/12/13

THIS BORING LOG IS NOT VALID IF SEPARATED FROM ORIGINAL REPORT. GEO LOG-DEPTH TO BOTTOM OF PAGE VRABLE HEALTHCARE FACILITY LOGS.GPJ TERRACON2012.GDT 1/14/13

BORING LOG NO. B-3

PROJECT: ----------

CLIENT: Vrable Land Holding Massillon, LLC

SITE: Tuller Road and Tuller Ridge Drive
Dublin, Ohio

LOCATION See Exhibit A-3

Surface Elev.: 830 (Ft.)

DEPTH	ELEVATION (Ft.)	Description
0.3	829.5	**TOPSOIL (3")**
		CLAYEY SAND WITH GRAVEL (SC), brown, very loose
3.0	827	
		LEAN CLAY WITH SAND AND GRAVEL (CL), brown, very stiff
5.5	824.5	
		SANDY SILT (ML), trace gravel, brown, medium dense
8.0	822	
		CLAYEY GRAVEL WITH SAND (GC), brown, very dense, noted cobbles and limestone layers (severely to completely weathered bedrock)
14.0	816	
		Auger Refusal at 14 Feet

DEPTH (Ft.)	SAMPLE TYPE	RECOVERY (In.)	FIELD TEST RESULTS	WATER CONTENT (%)
		4	2-2-1 N=3	
5		18	6-7-10 N=17	15
		18	7-9-13 N=22	
10		8	7-8-50/4" N=50/4"	
		1	50/2" N=50/2"	
15				
20				
25				

GRAPHIC LOG | WATER LEVEL OBSERVATIONS | LABORATORY TORVANE/HP (psf) | STRENGTH TEST: TEST TYPE, COMPRESSIVE STRENGTH (psf), STRAIN (%) | ATTERBERG LIMITS: LL-PL-PI

Stratification lines are approximate. In-situ, the transition may be gradual.

Hammer Type: Automatic

Advancement Method:
Hollow Stem Auger

Abandonment Method:
Borings backfilled with soil cuttings upon completion.

Notes:

WATER LEVEL OBSERVATIONS

No water observed

Dry cave-in at 10 feet

Terracon
790 Morrison Road
Columbus, Ohio

Boring Started: 12/14/2012 | Boring Completed: 12/14/2012

Drill Rig: ATV | Driller: Hayslip

Project No.: N4125218 | Exhibit: A-3

City of Dublin OHIO, USA
Approved for Construction
BR13-00400040
04/12/13

THIS BORING LOG IS NOT VALID IF SEPARATED FROM ORIGINAL REPORT. GEO LOG-DEPTH TO BOTTOM OF PAGE VRABLE HEALTHCARE FACILITY LOGS.GPJ TERRACON2012.GDT 1/14/13

BORING LOG NO. B-4

PROJECT: ----------

CLIENT: Vrable Land Holding Massillon, LLC

SITE: Tuller Road and Tuller Ridge Drive
Dublin, Ohio

LOCATION See Exhibit A-3

Surface Elev.: 840.5 (Ft.)

DEPTH	ELEVATION (Ft.)	Description
0.5	840	**TOPSOIL (6")**
		LEAN CLAY (CL), trace sand, trace gravel, brown, medium stiff to stiff
7.5	833	**SILTY SAND WITH GRAVEL (SM)**, brown, dense to very dense, noted limestone layers (severely to completely weathered bedrock)
18.6	822	***Auger Refusal at 18.6 Feet***

DEPTH (Ft.)	SAMPLE TYPE	RECOVERY (In.)	FIELD TEST RESULTS	LABORATORY TORVANE/HP (psf)	STRENGTH TEST: TEST TYPE	STRENGTH TEST: COMPRESSIVE STRENGTH (psf)	STRENGTH TEST: STRAIN (%)	WATER CONTENT (%)	ATTERBERG LIMITS: LL-PL-PI
	X	18	2-2-2 N=4	2500 (HP)				22	
5	X	0	5-5-6 N=11						
	X	11	5-6-8 N=14	2000 (HP)				27	
10	X	18	15-30-20 N=50						
15	X	18	14-17-31 N=48						
20		1	50/1" N=50/1"						
25									

Stratification lines are approximate. In-situ, the transition may be gradual.

Hammer Type: Automatic

Advancement Method:
Hollow Stem Auger

Abandonment Method:
Borings backfilled with soil cuttings upon completion.

Notes:

WATER LEVEL OBSERVATIONS

No water observed

Dry cave-in at 14.5 feet

Terracon
790 Morrison Road
Columbus, Ohio

Boring Started: 12/14/2012
Boring Completed: 12/14/2012
Drill Rig: ATV
Driller: Hayslip
Project No.: N4125218
Exhibit:

City of Dublin
OHIO, USA
Approved for Construction
B013-00400040
04/12/13

THIS BORING LOG IS NOT VALID IF SEPARATED FROM ORIGINAL REPORT. GEO LOG-DEPTH TO BOTTOM OF PAGE VRABLE HEALTHCARE FACILITY LOGS.GPJ TERRACON2012.GDT 1/14/13

BORING LOG NO. B-5

PROJECT: ----------

CLIENT: Vrable Land Holding Massillon, LLC

SITE: Tuller Road and Tuller Ridge Drive
Dublin, Ohio

LOCATION See Exhibit A-3

Surface Elev.: 843 (Ft.)

DEPTH	ELEVATION (Ft.)	Description
0.5	842.5	**TOPSOIL (6")**
		SANDY LEAN CLAY (CL), trace gravel, brown, stiff
3.0	840	
		LEAN CLAY (CL), trace gravel, brown, very stiff
5.5	837.5	
		SILTY SAND WITH GRAVEL (SM), brown, very dense, (severely to completely weathered bedrock)
11.5	831.5	
		LIMESTONE, gray, very thinly to thinly bedded, moderately to moderately severely weathered, hard, noted 1" shale layer at 19.5'
20.0	823	
		Auger Refusal at 20 Feet

DEPTH (Ft.)	SAMPLE TYPE	RECOVERY (In.)	FIELD TEST RESULTS	WATER CONTENT (%)
		18	3-4-5 N=9	17
		1	17-16-21 N=37	13
5		9	21-50/4" N=50/4"	
		5	50/5" N=50/5"	
10				
		52		
15		48		
20				
25				

GRAPHIC LOG | WATER LEVEL OBSERVATIONS | LABORATORY TORVANE/HP (psf) | STRENGTH TEST: TEST TYPE, COMPRESSIVE STRENGTH (psf), STRAIN (%) | ATTERBERG LIMITS: LL-PL-PI

Stratification lines are approximate. In-situ, the transition may be gradual.

Hammer Type: Automatic

Advancement Method:
Hollow Stem Auger

Abandonment Method:
Borings backfilled with soil cuttings upon completion.

Notes:

WATER LEVEL OBSERVATIONS

No water observed

Wet cave-in at 9 feet

Terracon
790 Morrison Road
Columbus, Ohio

Boring Started: 12/15/2012 | Boring Completed: 12/15/2012

Drill Rig: ATV | Driller: Hayslip

Project No.: N4125218 | Exhibit: A-3

City of Dublin OHIO, USA
Approved for Construction
BR13-00400040
04/12/13

THIS BORING LOG IS NOT VALID IF SEPARATED FROM ORIGINAL REPORT. GEO LOG-DEPTH TO BOTTOM OF PAGE VRABLE HEALTHCARE FACILITY LOGS.GPJ TERRACON2012.GDT 1/14/13

BORING LOG NO. B-6

PROJECT: ----------

CLIENT: Vrable Land Holding Massillon, LLC

SITE: Tuller Road and Tuller Ridge Drive
Dublin, Ohio

LOCATION See Exhibit A-3

Surface Elev.: 845 (Ft.)

DEPTH	ELEVATION (Ft.)	Description
0.5	844.5	**TOPSOIL (6")**
0.8	844	**FILL - SILTY GRAVEL (GM)**, noted brick fragments and organics
		LEAN CLAY (CL), trace sand, brown, stiff
5.5	839.5	**LEAN CLAY (CL)**, trace sand, trace gravel, brown, medium stiff to stiff
7.5	837.5	**SILTY SAND WITH GRAVEL (SM)**, brown, very dense, noted limestone layers (severely to completely weathered bedrock)
9.0	836	***Auger Refusal at 9 Feet***

DEPTH (Ft.)	SAMPLE TYPE	RECOVERY (In.)	FIELD TEST RESULTS	LABORATORY TORVANE/HP (psf)	STRENGTH TEST: TEST TYPE	STRENGTH TEST: COMPRESSIVE STRENGTH (psf)	STRENGTH TEST: STRAIN (%)	WATER CONTENT (%)	ATTERBERG LIMITS: LL-PL-PI
		18	4-5-5 N=10	4500 (HP)				21	
5		18	3-4-5 N=9	3500 (HP)				34	
		18	4-4-4 N=8					20	
9		6	50/6" N=50/6"						
10									
15									
20									
25									

Stratification lines are approximate. In-situ, the transition may be gradual.

Hammer Type: Automatic

Advancement Method:
Hollow Stem Auger

Abandonment Method:
Borings backfilled with soil cuttings upon completion.

Notes:

WATER LEVEL OBSERVATIONS

No water observed

Dry cave-in at 6 feet

Terracon
790 Morrison Road
Columbus, Ohio

Boring Started: 12/14/2012 | Boring Completed: 12/14/2012

Drill Rig: ATV | Driller: Hayslip

Project No.: N4125218 | Exhibit:

City of Dublin
OHIO, USA
Approved for Construction
B013-00400040
04/12/13

THIS BORING LOG IS NOT VALID IF SEPARATED FROM ORIGINAL REPORT. GEO LOG-DEPTH TO BOTTOM OF PAGE VRABLE HEALTHCARE FACILITY LOGS.GPJ TERRACON2012.GDT 1/14/13

BORING LOG NO. B-7

PROJECT: ----------

CLIENT: Vrable Land Holding Massillon, LLC

SITE: Tuller Road and Tuller Ridge Drive
Dublin, Ohio

LOCATION See Exhibit A-3

Surface Elev.: 844 (Ft.)

DEPTH	ELEVATION (Ft.)	Description
0.3	843.5	**TOPSOIL (3")**
		FILL - CLAYEY GRAVEL (GC), trace sand, brown, loose, noted concrete, noted organics
3.0	841	
		LEAN CLAY (CL), trace gravel, brown, very stiff
5.5	838.5	
		POORLY GRADED GRAVEL WITH CLAY AND SAND (GP-GC), brown, dense to very dense, noted limestone layers (severely to completely weathered bedrock)
9.0	835	
		Auger Refusal at 9 Feet

DEPTH (Ft.)	SAMPLE TYPE	RECOVERY (In.)	FIELD TEST RESULTS	LABORATORY TORVANE/HP (psf)	STRENGTH TEST: TEST TYPE	STRENGTH TEST: COMPRESSIVE STRENGTH (psf)	STRENGTH TEST: STRAIN (%)	WATER CONTENT (%)	ATTERBERG LIMITS: LL-PL-PI
		18	3-3-5 N=8						
5		5	8-5-13 N=18	2000 (HP)				22	
		18	12-16-22 N=38						
		2	50/2" N=50/2"						
10									
15									
20									
25									

WATER LEVEL OBSERVATIONS

Stratification lines are approximate. In-situ, the transition may be gradual.

Hammer Type: Automatic

Advancement Method:
Hollow Stem Auger

Abandonment Method:
Borings backfilled with soil cuttings upon completion.

Notes:

WATER LEVEL OBSERVATIONS

No water observed

Dry cave-in at 7 feet

Terracon
790 Morrison Road
Columbus, Ohio

Boring Started: 12/16/2012
Boring Completed: 12/16/2012
Drill Rig: ATV
Driller: Hayslip
Project No.: N4125218
Exhibit: A-10

City of Dublin
OHIO, USA
Approved for Construction
BP13-00400040
04/12/13

THIS BORING LOG IS NOT VALID IF SEPARATED FROM ORIGINAL REPORT. GEO LOG-DEPTH TO BOTTOM OF PAGE VRABLE HEALTHCARE FACILITY LOGS.GPJ TERRACON2012.GDT 1/14/13

BORING LOG NO. B-8

PROJECT: ----------

CLIENT: Vrable Land Holding Massillon, LLC

SITE: Tuller Road and Tuller Ridge Drive
Dublin, Ohio

LOCATION See Exhibit A-3

Surface Elev.: 837.5 (Ft.)

DEPTH	ELEVATION (Ft.)	Description
0.3	837	**TOPSOIL (3")**
		LEAN CLAY (CL), trace gravel, brown, medium stiff to stiff
8.0	829.5	**SILTY SAND WITH GRAVEL (SM)**, brown, very dense, (severely to completely weathered bedrock)
15.0	822.5	**LIMESTONE**, gray to white, moderately to moderately severely weathered, hard
20.0	817.5	***Auger Refusal at 20 Feet***

Sample	Recovery (In.)	Field Test Results	Laboratory Torvane/HP (psf)	Strength Test: Test Type	Compressive Strength (psf)	Strain (%)	Water Content (%)	Atterberg Limits LL-PL-PI
	18	3-3-5 N=8					24	
	18	3-3-4 N=7	3000 (HP)				27	
	18	6-8-7 N=15					15	
	9	16-50/3" N=50/3"						
	9	40-50/3" N=50/3"						
	56							

Stratification lines are approximate. In-situ, the transition may be gradual.

Hammer Type: Automatic

Advancement Method:
Hollow Stem Auger

Abandonment Method:
Borings backfilled with soil cuttings upon completion.

Notes:

WATER LEVEL OBSERVATIONS

No water observed during drilling

Water observed at 11 feet after boring completion

Wet cave-in at 13 feet

Terracon
790 Morrison Road
Columbus, Ohio

Boring Started: 12/15/2012 | Boring Completed: 12/15/2012

Drill Rig: ATV | Driller: Hayslip

Project No.: N4125218 | Exhibit: A-11

City of Dublin OHIO, USA
Approved for Construction
BR13-00400040
04/12/13

THIS BORING LOG IS NOT VALID IF SEPARATED FROM ORIGINAL REPORT. GEO LOG-DEPTH TO BOTTOM OF PAGE VRABLE HEALTHCARE FACILITY LOGS.GPJ TERRACON2012.GDT 1/14/13

BORING LOG NO. B-9

PROJECT: ----------

CLIENT: Vrable Land Holding Massillon, LLC

SITE: Tuller Road and Tuller Ridge Drive
Dublin, Ohio

LOCATION See Exhibit A-3

Surface Elev.: 834 (Ft.)

DEPTH	ELEVATION (Ft.)	DESCRIPTION
0.3	833.5	**TOPSOIL (4")**
		LEAN CLAY (CL), trace gravel, brown, medium stiff to stiff, noted boulder at 8.5 feet
13.2	821	*Auger Refusal at 13.2 Feet*

DEPTH (Ft.)	SAMPLE TYPE	RECOVERY (In.)	FIELD TEST RESULTS	LABORATORY TORVANE/HP (psf)	STRENGTH TEST: TEST TYPE	STRENGTH TEST: COMPRESSIVE STRENGTH (psf)	STRENGTH TEST: STRAIN (%)	WATER CONTENT (%)	ATTERBERG LIMITS: LL-PL-PI
		18	2-2-3 N=5	2000 (HP)				23	
		18	3-5-6 N=11	3000 (HP)				24	
		18	9-12-13 N=25					13	
		3	50/3" N=50/3"						

Stratification lines are approximate. In-situ, the transition may be gradual.

Hammer Type: Automatic

Advancement Method:
Hollow Stem Auger

Abandonment Method:
Borings backfilled with soil cuttings upon completion.

Notes:

WATER LEVEL OBSERVATIONS

No water observed

Dry cave-in at 10.5 feet

Terracon
790 Morrison Road
Columbus, Ohio

Boring Started: 12/14/2012 | Boring Completed: 12/14/2012

Drill Rig: ATV | Driller: Hayslip

Project No.: N4125218 | Exhibit: A-12

City of Dublin OHIO, USA
Approved for Construction
BR13-00400040
04/12/13

THIS BORING LOG IS NOT VALID IF SEPARATED FROM ORIGINAL REPORT. GEO LOG-DEPTH TO BOTTOM OF PAGE VRABLE HEALTHCARE FACILITY LOGS.GPJ TERRACON2012.GDT 1/14/13

BORING LOG NO. B-10

PROJECT: ----------

CLIENT: Vrable Land Holding Massillon, LLC

SITE: Tuller Road and Tuller Ridge Drive
Dublin, Ohio

LOCATION See Exhibit A-3

Surface Elev.: 834 (Ft.)

DEPTH	ELEVATION (Ft.)	Description
0.2	834	**TOPSOIL (2")**
		LEAN CLAY (CL), trace gravel, brown, stiff
3.0	831	
		SANDY LEAN CLAY (CL), trace gravel, brown, stiff, noted cobbles and limestone layers (severely to completely weathered bedrock)
5.5	828.5	
		SILTY GRAVEL WITH SAND (GM), brown, very dense, noted cobbles and limestone layers (severely to completely weathered bedrock)
8.0	826	
		SILTY SAND WITH GRAVEL (SM), brown, very dense, noted cobbles and limestone layers (severely to completely weathered bedrock)
12.0	822	
		Auger Refusal at 12 Feet

DEPTH (Ft.)	SAMPLE TYPE	RECOVERY (In.)	FIELD TEST RESULTS	WATER CONTENT (%)
		18	3-4-4 N=8	14
		3	50/3" N=50/3"	
5		8	17-19-50/5" N=50/5"	
		18	28-33-28 N=61	
10				
15				
20				
25				

GRAPHIC LOG | WATER LEVEL OBSERVATIONS | LABORATORY TORVANE/HP (psf) | STRENGTH TEST: TEST TYPE, COMPRESSIVE STRENGTH (psf), STRAIN (%) | ATTERBERG LIMITS: LL-PL-PI

Stratification lines are approximate. In-situ, the transition may be gradual.

Hammer Type: Automatic

Advancement Method:
Hollow Stem Auger

Abandonment Method:
Borings backfilled with soil cuttings upon completion.

Notes:

WATER LEVEL OBSERVATIONS

No water observed

Dry cave-in at 8 feet

Terracon
790 Morrison Road
Columbus, Ohio

Boring Started: 12/15/2012 | Boring Completed: 12/15/2012
Drill Rig: ATV | Driller: Hayslip
Project No.: N4125218 | Exhibit: A-13

City of Dublin OHIO, USA
Approved for Construction
BR13-00400040
04/12/13

THIS BORING LOG IS NOT VALID IF SEPARATED FROM ORIGINAL REPORT. GEO LOG-DEPTH TO BOTTOM OF PAGE VRABLE HEALTHCARE FACILITY LOGS.GPJ TERRACON2012.GDT 1/14/13

BORING LOG NO. B-11

PROJECT: ----------

CLIENT: Vrable Land Holding Massillon, LLC

SITE: Tuller Road and Tuller Ridge Drive
Dublin, Ohio

LOCATION See Exhibit A-3

Surface Elev.: 841 (Ft.)

DEPTH	ELEVATION (Ft.)	Description
0.5	840.5	**TOPSOIL (6")**
		FAT CLAY (CH), trace gravel, brown, stiff to very stiff
5.5	835.5	**SILTY GRAVEL WITH SAND (GM)**, brown, medium dense to dense, noted cobbles and limestone layers (severely to completely weathered bedrock)
10.5	830.5	***Auger Refusal at 10.5 Feet***

Sample Depth (Ft.)	Recovery (In.)	Field Test Results	Laboratory Torvane/HP (psf)	Strength Test: Test Type	Strength Test: Compressive Strength (psf)	Strength Test: Strain (%)	Water Content (%)	Atterberg Limits LL-PL-PI
	18	3-4-7 N=11					19	
	18	4-5-6 N=11	6000 (HP)				21	59-41-18
	18	7-8-8 N=16						
	14	12-12-18 N=30						

Stratification lines are approximate. In-situ, the transition may be gradual.

Hammer Type: Automatic

Advancement Method:
Hollow Stem Auger

Abandonment Method:
Borings backfilled with soil cuttings upon completion.

Notes:

WATER LEVEL OBSERVATIONS

No water observed

Dry cave-in at 5 feet

Terracon
790 Morrison Road
Columbus, Ohio

Boring Started: 12/14/2012 | Boring Completed: 12/14/2012
Drill Rig: ATV | Driller: Hayslip
Project No.: N4125218 | Exhibit: A-14

City of Dublin OHIO, USA
Approved for Construction
BR13-00400040
04/12/13

THIS BORING LOG IS NOT VALID IF SEPARATED FROM ORIGINAL REPORT. GEO LOG-DEPTH TO BOTTOM OF PAGE VRABLE HEALTHCARE FACILITY LOGS.GPJ TERRACON2012.GDT 1/14/13

BORING LOG NO. B-12

PROJECT: ----------

CLIENT: Vrable Land Holding Massillon, LLC

SITE: Tuller Road and Tuller Ridge Drive
Dublin, Ohio

LOCATION See Exhibit A-3

Surface Elev.: 837.5 (Ft.)

DEPTH	ELEVATION (Ft.)	Description
0.3	837	**TOPSOIL (4")**
		LEAN CLAY (CL), trace sand, brown, medium stiff to stiff
5.5	832	
		LEAN CLAY (CL), trace sand, trace gravel, brown, very stiff
7.0	830.5	
		SILTY SAND WITH GRAVEL (SM), brown and gray, very dense, noted limestone layers (severely to completely weathered bedrock)
12.0	825.5	
		Auger Refusal at 12 Feet

DEPTH (Ft.)	SAMPLE TYPE	RECOVERY (In.)	FIELD TEST RESULTS	LABORATORY TORVANE/HP (psf)	STRENGTH TEST: TEST TYPE	STRENGTH TEST: COMPRESSIVE STRENGTH (psf)	STRENGTH TEST: STRAIN (%)	WATER CONTENT (%)	ATTERBERG LIMITS: LL-PL-PI
		18	3-2-4 N=6						
		18	5-5-6 N=11	4000 (HP)				22	
		18	8-10-11 N=21					11	
		10	39-50/4" N=50/4"						

Stratification lines are approximate. In-situ, the transition may be gradual.

Hammer Type: Automatic

Advancement Method:
Hollow Stem Auger

Abandonment Method:
Borings backfilled with soil cuttings upon completion.

Notes:

WATER LEVEL OBSERVATIONS

No water observed

Dry cave-in at 9 feet

Terracon
790 Morrison Road
Columbus, Ohio

Boring Started: 12/16/2012 | Boring Completed: 12/16/2012

Drill Rig: ATV | Driller: Hayslip

Project No.: N4125218 | Exhibit: A-18

City of Dublin OHIO, USA
Approved for Construction
BR13-00400040
04/12/13

THIS BORING LOG IS NOT VALID IF SEPARATED FROM ORIGINAL REPORT. GEO LOG-DEPTH TO BOTTOM OF PAGE VRABLE HEALTHCARE FACILITY LOGS.GPJ TERRACON2012.GDT 1/14/13

BORING LOG NO. P-1

PROJECT: ----------

CLIENT: Vrable Land Holding Massillon, LLC

SITE: Tuller Road and Tuller Ridge Drive
Dublin, Ohio

LOCATION See Exhibit A-3

Surface Elev.: 839 (Ft.)

DEPTH	ELEVATION (Ft.)	Description
0.3	838.5	**TOPSOIL (4")**
3.0	836	**FAT CLAY (CH)**, trace sand, brown, medium stiff to stiff
5.5	833.5	**CLAYEY GRAVEL (GC)**, trace sand, medium dense
8.7	830.5	**SILTY GRAVEL WITH SAND (GM)**, brown, very dense, noted limestone layers (severely to completely weathered bedrock)
		Boring Terminated at 8.7 Feet

DEPTH (Ft.)	WATER LEVEL OBSERVATIONS	SAMPLE TYPE	RECOVERY (In.)	FIELD TEST RESULTS	LABORATORY TORVANE/HP (psf)	STRENGTH TEST: TEST TYPE	STRENGTH TEST: COMPRESSIVE STRENGTH (psf)	STRENGTH TEST: STRAIN (%)	WATER CONTENT (%)	ATTERBERG LIMITS: LL-PL-PI
		X	18	3-4-5 N=9	2000 (HP)				32	67-46-21
5		X	18	5-6-17 N=23						
		X	18	15-21-33 N=54						
		X	2	50/2" N=50/2"						
10										
15										
20										
25										

Stratification lines are approximate. In-situ, the transition may be gradual.

Hammer Type: Automatic

Advancement Method:
Hollow Stem Auger

Abandonment Method:
Borings backfilled with soil cuttings upon completion.

Notes:

WATER LEVEL OBSERVATIONS

No water observed

Dry cave-in at 6 feet

Terracon
790 Morrison Road
Columbus, Ohio

Boring Started: 12/16/2012 | Boring Completed: 12/16/2012

Drill Rig: ATV | Driller: Hayslip

Project No.: N4125218 | Exhibit: A-16

City of Dublin OHIO, USA
Approved for Construction
BP13-00400040
04/12/13

THIS BORING LOG IS NOT VALID IF SEPARATED FROM ORIGINAL REPORT. GEO LOG-DEPTH TO BOTTOM OF PAGE VRABLE HEALTHCARE FACILITY LOGS.GPJ TERRACON2012.GDT 1/14/13

BORING LOG NO. P-2

PROJECT: ----------

CLIENT: Vrable Land Holding Massillon, LLC

SITE: Tuller Road and Tuller Ridge Drive
Dublin, Ohio

LOCATION See Exhibit A-3

Surface Elev.: 835.5 (Ft.)

DEPTH	ELEVATION (Ft.)	Description
0.8	834.5	**TOPSOIL (10")**
5.5	830	**LEAN CLAY (CL)**, trace sand, brown, stiff to very stiff
9.7	826	**SILTY SAND WITH GRAVEL (SM)**, gray, very dense, noted limestone layers (severely to completely weathered bedrock)
		Boring Terminated at 9.7 Feet

DEPTH (Ft.)	WATER LEVEL OBSERVATIONS	SAMPLE TYPE	RECOVERY (In.)	FIELD TEST RESULTS	LABORATORY TORVANE/HP (psf)	STRENGTH TEST: TEST TYPE	STRENGTH TEST: COMPRESSIVE STRENGTH (psf)	STRENGTH TEST: STRAIN (%)	WATER CONTENT (%)	ATTERBERG LIMITS: LL-PL-PI
		X	18	3-4-5 N=9					20	
		X	18	4-5-6 N=11						
		X	18	23-37-40 N=77						
		X	13	17-43-50/1" N=50/1"						

5, 10, 15, 20, 25

Stratification lines are approximate. In-situ, the transition may be gradual.

Hammer Type: Automatic

Advancement Method:
Hollow Stem Auger

Abandonment Method:
Borings backfilled with soil cuttings upon completion.

Notes:

WATER LEVEL OBSERVATIONS

No water observed

Dry cave-in at 6 feet

Terracon
790 Morrison Road
Columbus, Ohio

Boring Started: 12/16/2012
Boring Completed: 12/16/2012
Drill Rig: ATV
Driller: Hayslip
Project No.: N4125218
Exhibit: A-7

City of Dublin
OHIO, USA
Approved for Construction
BR13-00400040
04/12/13

THIS BORING LOG IS NOT VALID IF SEPARATED FROM ORIGINAL REPORT. GEO LOG-DEPTH TO BOTTOM OF PAGE VRABLE HEALTHCARE FACILITY LOGS.GPJ TERRACON2012.GDT 1/14/13

BORING LOG NO. P-3

PROJECT: ----------

CLIENT: Vrable Land Holding Massillon, LLC

SITE: Tuller Road and Tuller Ridge Drive
Dublin, Ohio

LOCATION See Exhibit A-3

Surface Elev.: 835 (Ft.)

DEPTH	ELEVATION (Ft.)	Description
0.7	834.5	**TOPSOIL (8")**
3.0	832	**SILTY SAND WITH GRAVEL (SM)**, brown, dense, noted cobbles and limestone layers (severely to completely weathered bedrock)
10.0	825	**SILTY GRAVEL WITH SAND (GM)**, brown and gray, dense, noted cobbles and limestone layers (severely to completely weathered bedrock)
		Boring Terminated at 10 Feet

DEPTH (Ft.)	SAMPLE TYPE	RECOVERY (In.)	FIELD TEST RESULTS	WATER CONTENT (%)
	X	18	6-14-17 N=31	6
5	X	18	12-17-27 N=44	
	X	18	21-20-20 N=40	
	X	3	7-9-17 N=26	
10				
15				
20				
25				

GRAPHIC LOG | WATER LEVEL OBSERVATIONS | LABORATORY TORVANE/HP (psf) | STRENGTH TEST: TEST TYPE, COMPRESSIVE STRENGTH (psf), STRAIN (%) | ATTERBERG LIMITS: LL-PL-PI

Stratification lines are approximate. In-situ, the transition may be gradual.

Hammer Type: Automatic

Advancement Method:
Hollow Stem Auger

Abandonment Method:
Borings backfilled with soil cuttings upon completion.

Notes:

WATER LEVEL OBSERVATIONS

No water observed

Dry cave-in at 6 feet

Terracon
790 Morrison Road
Columbus, Ohio

Boring Started: 12/14/2012 | Boring Completed: 12/14/2012

Drill Rig: ATV | Driller: Hayslip

Project No.: N4125218 | Exhibit: A-18

City of Dublin OHIO, USA
Approved for Construction
BR13-00400040
04/12/13

THIS BORING LOG IS NOT VALID IF SEPARATED FROM ORIGINAL REPORT. GEO LOG-DEPTH TO BOTTOM OF PAGE VRABLE HEALTHCARE FACILITY LOGS.GPJ TERRACON2012.GDT 1/14/13

APPENDIX B
LABORATORY TESTING

City of Dublin
OHIO, USA
Approved for Construction
BP13-00400040
04/12/13

Laboratory Testing

As a part of the laboratory testing program, the soil samples were classified in the laboratory based on visual observation, and texture. The soil descriptions presented on the boring logs for native soils are in accordance with our enclosed General Notes and Unified Soil Classification System (USCS). A brief description of the Unified System is included in this report. Classification was predominantly by visual manual procedures. Moisture content and Atterberg Limit tests were performed on selected samples. The results of this laboratory testing are presented on the boring logs included in Appendix A and laboratory data sheets are included in Appendix B.

City of Dublin OHIO, USA
Approved for Construction
BP13-00400040
04/12/13

LIQUID AND PLASTIC LIMITS TEST REPORT

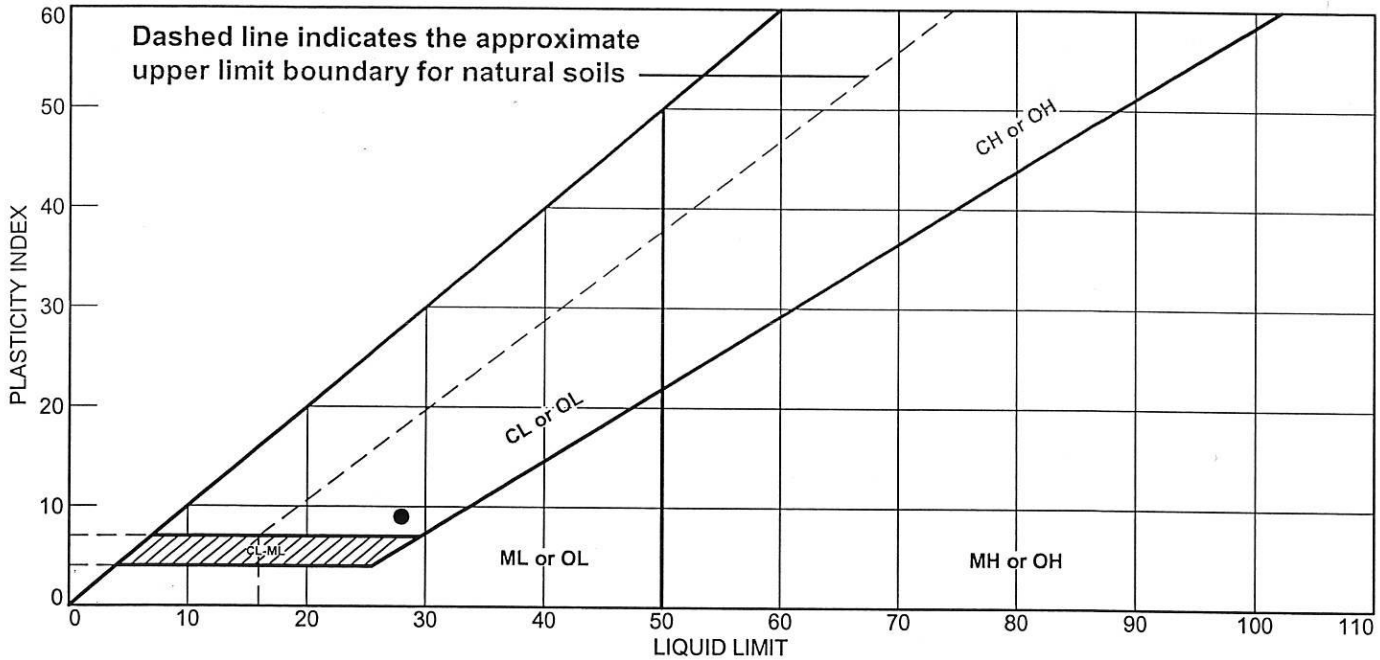

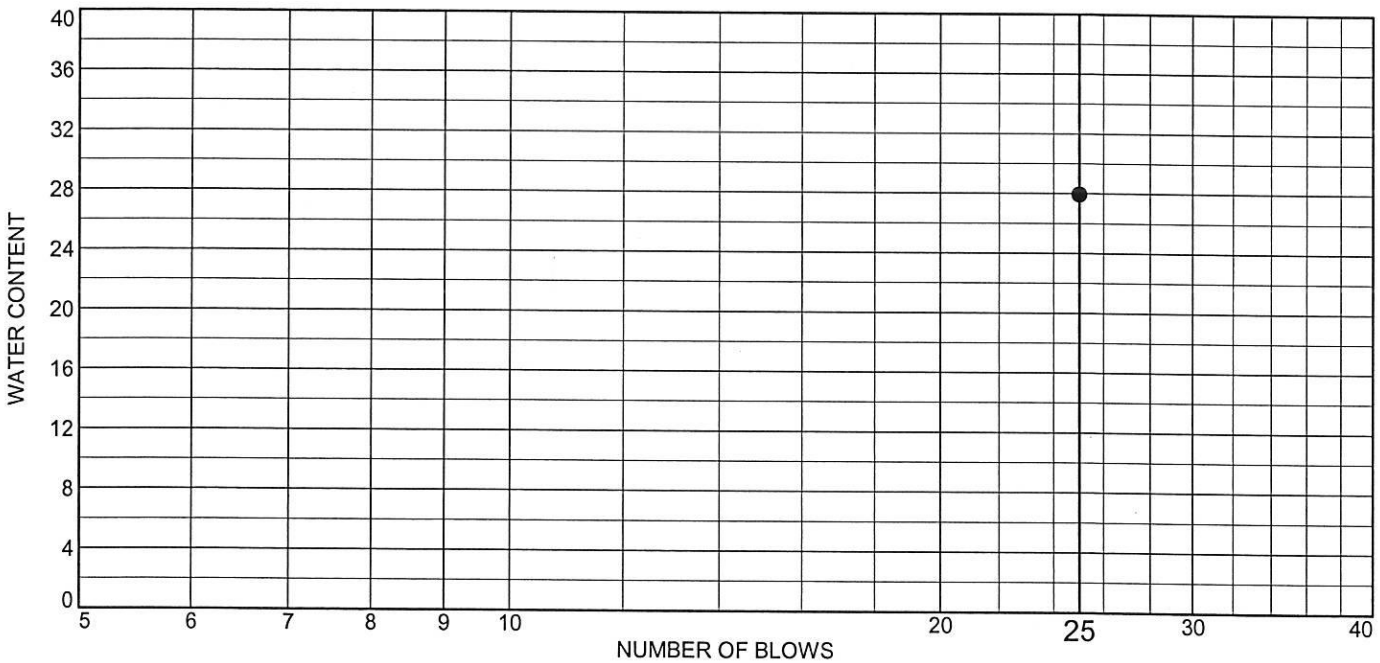

	MATERIAL DESCRIPTION	LL	PL	PI	%<#40	%<#200	USCS
●	FILL: Brown sandy lean clay with gravel and glass fragments	28	19	9			CL

Project No. N4125218 **Client:** Vrable Land Holding Massilon, LLC

Project: Vrable Healthcare Center - Dublin, OH

Source of Sample: B-2 **Depth:** 6.0'-7.5'
Sample Number: S-3

Remarks:
● Lab No. 1172
Date: 12-28-12

TERRACON CONSULTANTS, INC.

Columbus, Ohio

Exhibit B-2

City of Dublin OHIO, USA
Approved for Construction
BP13-00400040
04/12/13

Tested By: DS Checked By: AM

LIQUID AND PLASTIC LIMITS TEST REPORT

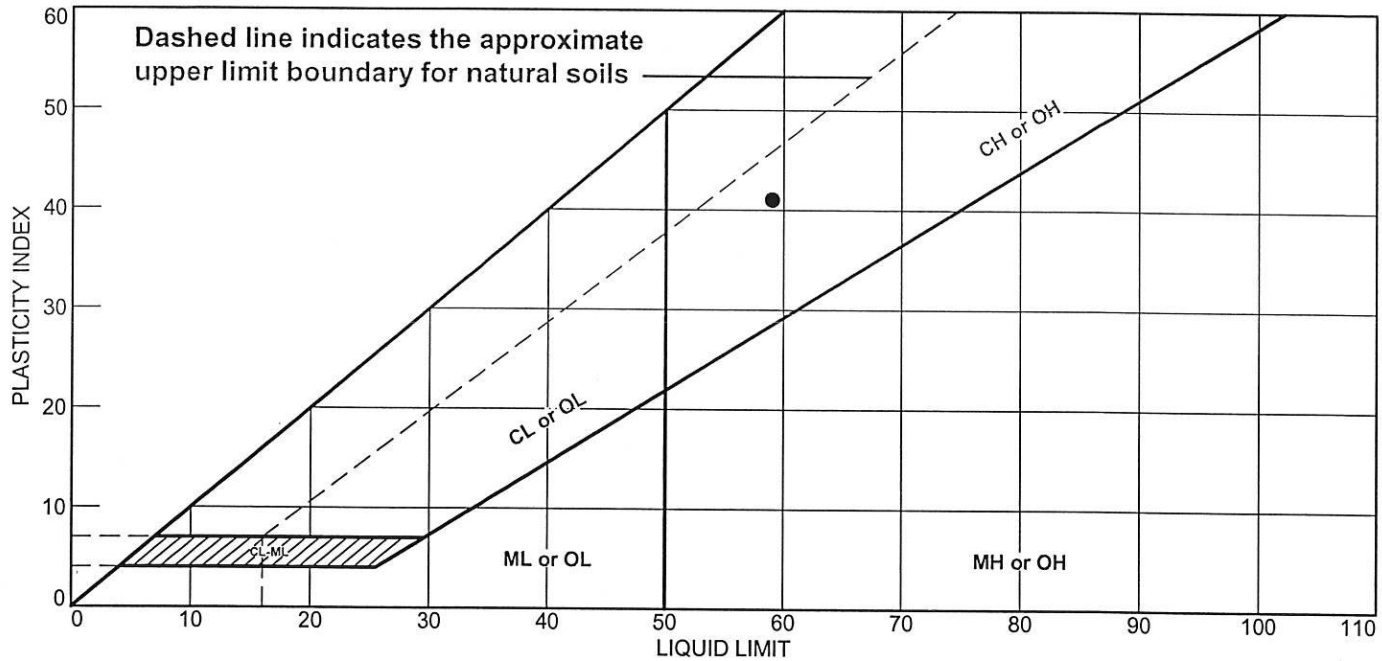

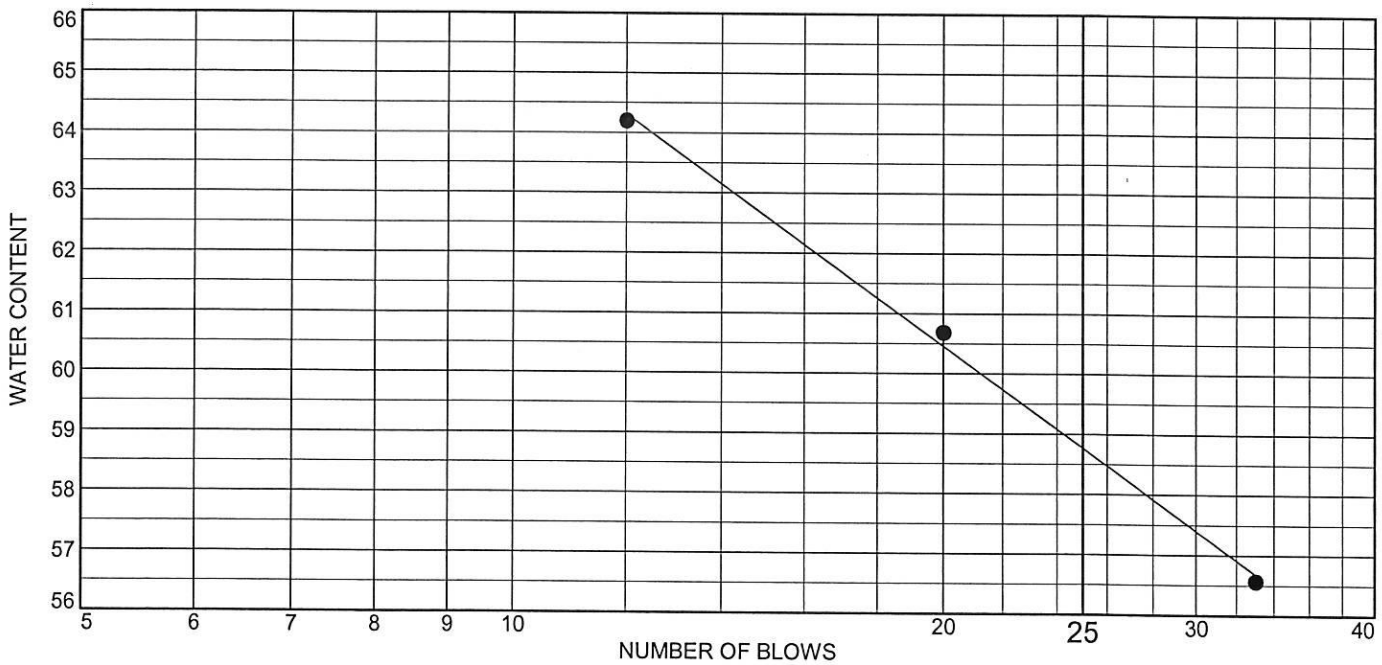

	MATERIAL DESCRIPTION	LL	PL	PI	%<#40	%<#200	USCS
●	Brown FAT CLAY, trace gravel	59	18	41			CH

Project No. N4125218 **Client:** Vrable Land Holding Massilon, LLC

Project: Vrable Healthcare Center - Dublin, OH

Source of Sample: B-11 **Depth:** 3.5'-5.0'
Sample Number: S-2

Remarks:
● Lab No. 1173
Date: 12-28-12

TERRACON CONSULTANTS, INC.

Columbus, Ohio

Exhibit B-3

Tested By: DS Checked By: AM

City of Dublin OHIO, USA
Approved for Construction
BP13-00400040
04/12/13

LIQUID AND PLASTIC LIMITS TEST REPORT

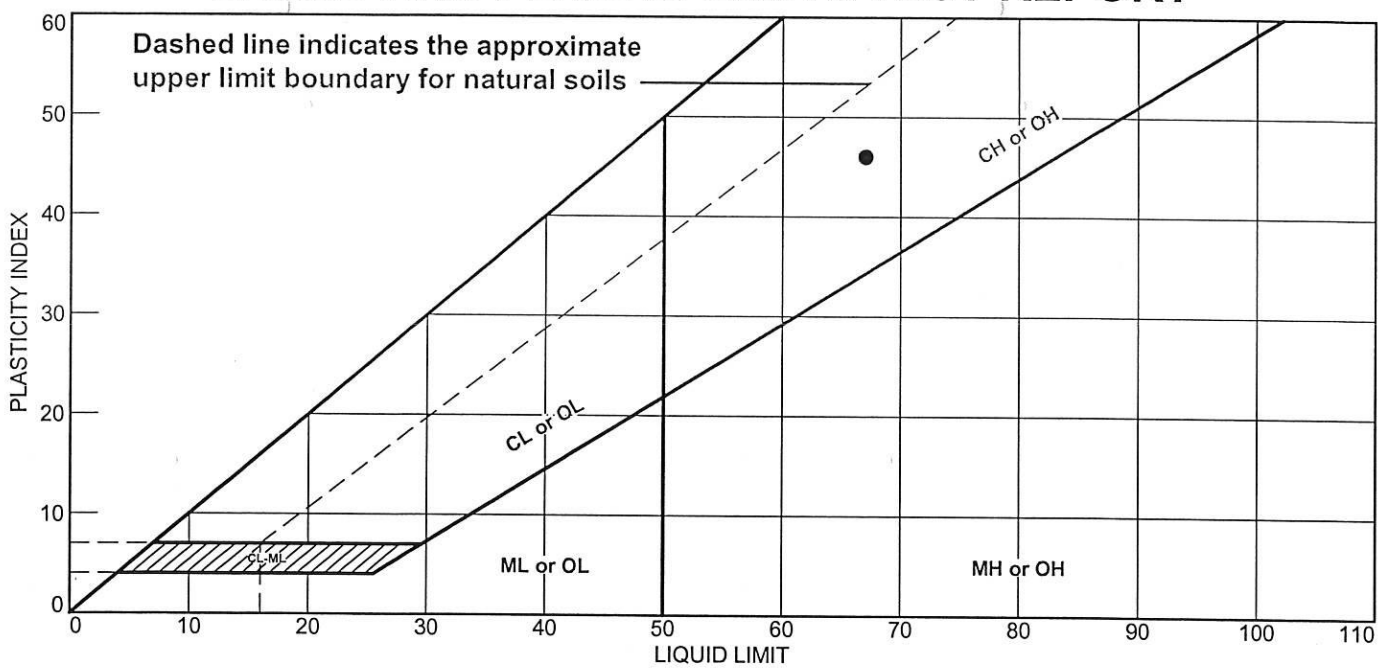

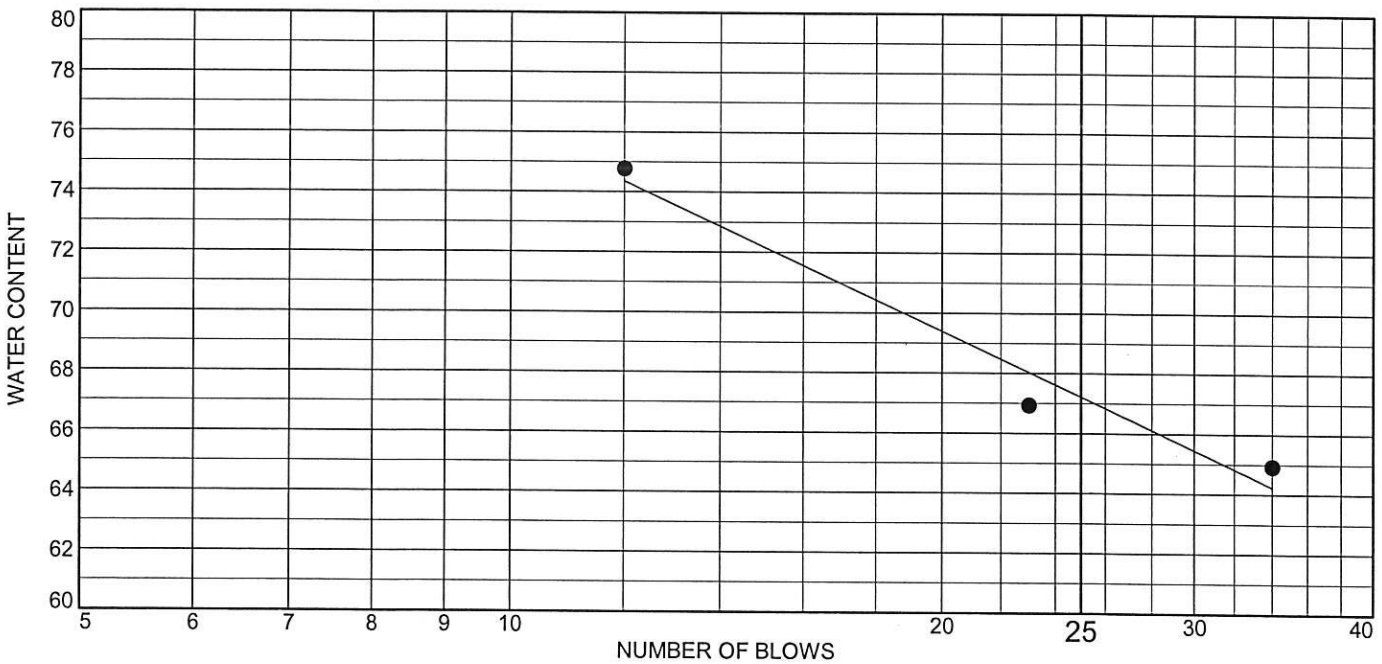

	MATERIAL DESCRIPTION	LL	PL	PI	%<#40	%<#200	USCS
●	Brown FAT CLAY, trace sand	67	21	46			CH

Project No. N4125218 **Client:** Vrable Land Holding Massilon, LLC

Project: Vrable Healthcare Center - Dublin, OH

Source of Sample: P-1 **Depth:** 1.0'-2.5'

Sample Number: S-1

Remarks:

● Lab No. 1174
Date: 12-28-12

TERRACON CONSULTANTS, INC.

Columbus, Ohio

Exhibit B-4

Tested By: DS Checked By: AM

City of Dublin OHIO, USA
Approved for Construction
BP13-00400040
04/12/13

APPENDIX C
SUPPORTING DOCUMENTS

City of Dublin
OHIO, USA
Approved for Construction
BP13-00400040
04/12/13

GENERAL NOTES

DESCRIPTION OF SYMBOLS AND ABBREVIATIONS

SAMPLING

Auger	Split Spoon
Shelby Tube	Macro Core
Ring Sampler	Rock Core
Grab Sample	No Recovery

WATER LEVEL

- Water Initially Encountered
- Water Level After a Specified Period of Time
- Water Level After a Specified Period of Time

Water levels indicated on the soil boring logs are the levels measured in the borehole at the times indicated. Groundwater level variations will occur over time. In low permeability soils, accurate determination of groundwater levels is not possible with short term water level observations.

FIELD TESTS

(HP)	Hand Penetrometer
(T)	Torvane
(b/f)	Standard Penetration Test (blows per foot)
(PID)	Photo-Ionization Detector
(OVA)	Organic Vapor Analyzer

DESCRIPTIVE SOIL CLASSIFICATION

Soil classification is based on the Unified Soil Classification System. Coarse Grained Soils have more than 50% of their dry weight retained on a #200 sieve; their principal descriptors are: boulders, cobbles, gravel or sand. Fine Grained Soils have less than 50% of their dry weight retained on a #200 sieve; they are principally described as clays if they are plastic, and silts if they are slightly plastic or non-plastic. Major constituents may be added as modifiers and minor constituents may be added according to the relative proportions based on grain size. In addition to gradation, coarse-grained soils are defined on the basis of their in-place relative density and fine-grained soils on the basis of their consistency.

LOCATION AND ELEVATION NOTES

Unless otherwise noted, Latitude and Longitude are approximately determined using a hand-held GPS device. The accuracy of such devices is variable. Surface elevation data annotated with +/- indicates that no actual topographical survey was conducted to confirm the surface elevation. Instead, the surface elevation was approximately determined from topographic maps of the area.

STRENGTH TERMS

RELATIVE DENSITY OF COARSE-GRAINED SOILS (More than 50% retained on No. 200 sieve.) Density determined by Standard Penetration Resistance Includes gravels, sands and silts.			CONSISTENCY OF FINE-GRAINED SOILS (50% or more passing the No. 200 sieve.) Consistency determined by laboratory shear strength testing, field visual-manual procedures or standard penetration resistance				BEDROCK		
Descriptive Term (Density)	Standard Penetration or N-Value Blows/Ft.	Ring Sampler Blows/Ft.	Descriptive Term (Consistency)	Unconfined Compressive Strength, Qu, psf	Standard Penetration or N-Value Blows/Ft.	Ring Sampler Blows/Ft.	Ring Sampler Blows/Ft.	Standard Penetration or N-Value Blows/Ft.	Descriptive Term (Consistency)
Very Loose	0 - 3	0 - 6	Very Soft	less than 500	0 - 1	< 3	< 30	< 20	Weathered
Loose	4 - 9	7 - 18	Soft	500 to 1,000	2 - 4	3 - 4	30 - 49	20 - 29	Firm
Medium Dense	10 - 29	19 - 58	Medium-Stiff	1,000 to 2,000	4 - 8	5 - 9	50 - 89	30 - 49	Medium Hard
Dense	30 - 50	59 - 98	Stiff	2,000 to 4,000	8 - 15	10 - 18	90 - 119	50 - 79	Hard
Very Dense	> 50	≥ 99	Very Stiff	4,000 to 8,000	15 - 30	19 - 42	> 119	>79	Very Hard
			Hard	> 8,000	> 30	> 42			

RELATIVE PROPORTIONS OF SAND AND GRAVEL

Descriptive Term(s) of other constituents	Percent of Dry Weight
Trace	< 15
With	15 - 29
Modifier	> 30

GRAIN SIZE TERMINOLOGY

Major Component of Sample	Particle Size
Boulders	Over 12 in. (300 mm)
Cobbles	12 in. to 3 in. (300mm to 75mm)
Gravel	3 in. to #4 sieve (75mm to 4.75 mm)
Sand	#4 to #200 sieve (4.75mm to 0.075mm
Silt or Clay	Passing #200 sieve (0.075mm)

RELATIVE PROPORTIONS OF FINES

Descriptive Term(s) of other constituents	Percent of Dry Weight
Trace	< 5
With	5 - 12
Modifier	> 12

PLASTICITY DESCRIPTION

Term	Plasticity Index
Non-plastic	0
Low	1 - 10
Medium	11 - 30
High	> 30

Terracon

City of Dublin OHIO, USA
Approved for Construction
BPE31-0010040
04/12/13

UNIFIED SOIL CLASSIFICATION SYSTEM

Criteria for Assigning Group Symbols and Group Names Using Laboratory Tests [A]					Soil Classification	
					Group Symbol	Group Name [B]
Coarse Grained Soils: More than 50% retained on No. 200 sieve	**Gravels:** More than 50% of coarse fraction retained on No. 4 sieve	**Clean Gravels:** Less than 5% fines [C]	$Cu \geq 4$ and $1 \leq Cc \leq 3$ [E]		GW	Well-graded gravel [F]
			$Cu < 4$ and/or $1 > Cc > 3$ [E]		GP	Poorly graded gravel [F]
		Gravels with Fines: More than 12% fines [C]	Fines classify as ML or MH		GM	Silty gravel [F,G,H]
			Fines classify as CL or CH		GC	Clayey gravel [F,G,H]
	Sands: 50% or more of coarse fraction passes No. 4 sieve	**Clean Sands:** Less than 5% fines [D]	$Cu \geq 6$ and $1 \leq Cc \leq 3$ [E]		SW	Well-graded sand [I]
			$Cu < 6$ and/or $1 > Cc > 3$ [E]		SP	Poorly graded sand [I]
		Sands with Fines: More than 12% fines [D]	Fines classify as ML or MH		SM	Silty sand [G,H,I]
			Fines classify as CL or CH		SC	Clayey sand [G,H,I]
Fine-Grained Soils: 50% or more passes the No. 200 sieve	**Silts and Clays:** Liquid limit less than 50	**Inorganic:**	PI > 7 and plots on or above "A" line [J]		CL	Lean clay [K,L,M]
			PI < 4 or plots below "A" line [J]		ML	Silt [K,L,M]
		Organic:	Liquid limit - oven dried	< 0.75	OL	Organic clay [K,L,M,N]
			Liquid limit - not dried			Organic silt [K,L,M,O]
	Silts and Clays: Liquid limit 50 or more	**Inorganic:**	PI plots on or above "A" line		CH	Fat clay [K,L,M]
			PI plots below "A" line		MH	Elastic Silt [K,L,M]
		Organic:	Liquid limit - oven dried	< 0.75	OH	Organic clay [K,L,M,P]
			Liquid limit - not dried			Organic silt [K,L,M,Q]
Highly organic soils:	Primarily organic matter, dark in color, and organic odor				PT	Peat

[A] Based on the material passing the 3-inch (75-mm) sieve
[B] If field sample contained cobbles or boulders, or both, add "with cobbles or boulders, or both" to group name.
[C] Gravels with 5 to 12% fines require dual symbols: GW-GM well-graded gravel with silt, GW-GC well-graded gravel with clay, GP-GM poorly graded gravel with silt, GP-GC poorly graded gravel with clay.
[D] Sands with 5 to 12% fines require dual symbols: SW-SM well-graded sand with silt, SW-SC well-graded sand with clay, SP-SM poorly graded sand with silt, SP-SC poorly graded sand with clay

[E] $Cu = D_{60}/D_{10}$ $\quad Cc = \dfrac{(D_{30})^2}{D_{10} \times D_{60}}$

[F] If soil contains ≥ 15% sand, add "with sand" to group name.
[G] If fines classify as CL-ML, use dual symbol GC-GM, or SC-SM.
[H] If fines are organic, add "with organic fines" to group name.
[I] If soil contains ≥ 15% gravel, add "with gravel" to group name.
[J] If Atterberg limits plot in shaded area, soil is a CL-ML, silty clay.
[K] If soil contains 15 to 29% plus No. 200, add "with sand" or "with gravel," whichever is predominant.
[L] If soil contains ≥ 30% plus No. 200 predominantly sand, add "sandy" to group name.
[M] If soil contains ≥ 30% plus No. 200, predominantly gravel, add "gravelly" to group name.
[N] PI ≥ 4 and plots on or above "A" line.
[O] PI < 4 or plots below "A" line.
[P] PI plots on or above "A" line.
[Q] PI plots below "A" line.

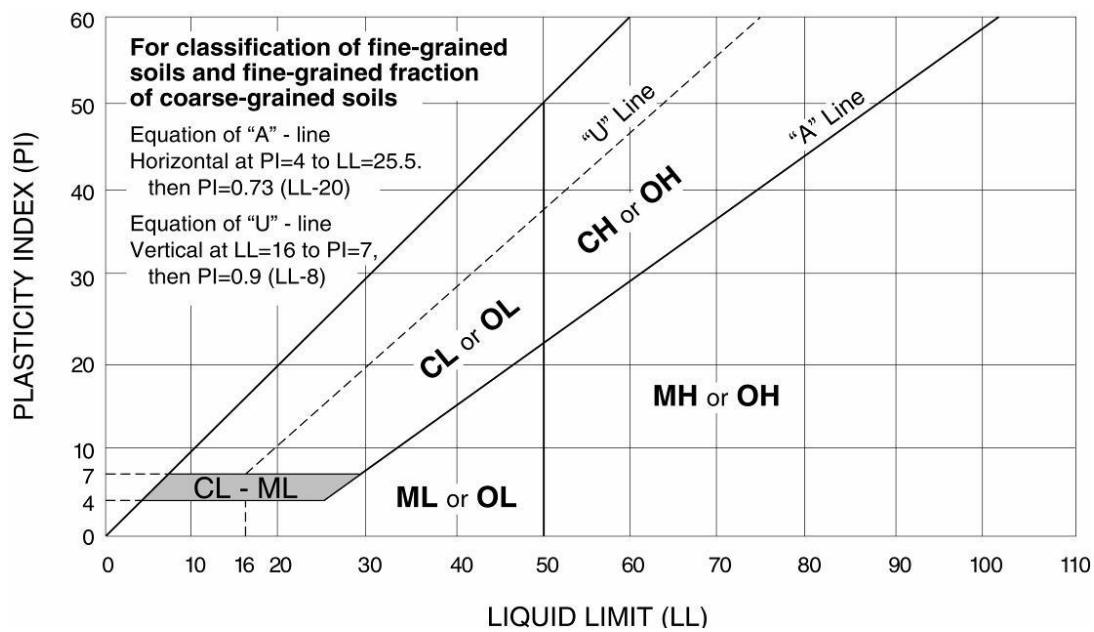

Terracon

Exhibit C-2

City of Dublin OHIO, USA
Approved for Construction
BP13-00400040
04/12/13

DESCRIPTION OF ROCK PROPERTIES

WEATHERING

Fresh	Rock fresh, crystals bright, few joints may show slight staining. Rock rings under hammer if crystalline.
Very slight	Rock generally fresh, joints stained, some joints may show thin clay coatings, crystals in broken face show bright. Rock rings under hammer if crystalline.
Slight	Rock generally fresh, joints stained, and discoloration extends into rock up to 1 in. Joints may contain clay. In granitoid rocks some occasional feldspar crystals are dull and discolored. Crystalline rocks ring under hammer.
Moderate	Significant portions of rock show discoloration and weathering effects. In granitoid rocks, most feldspars are dull and discolored; some show clayey. Rock has dull sound under hammer and shows significant loss of strength as compared with fresh rock.
Moderately severe	All rock except quartz discolored or stained. In granitoid rocks, all feldspars dull and discolored and majority show kaolinization. Rock shows severe loss of strength and can be excavated with geologist's pick.
Severe	All rock except quartz discolored or stained. Rock "fabric" clear and evident, but reduced in strength to strong soil. In granitoid rocks, all feldspars kaolinized to some extent. Some fragments of strong rock usually left.
Very severe	All rock except quartz discolored or stained. Rock "fabric" discernible, but mass effectively reduced to "soil" with only fragments of strong rock remaining.
Complete	Rock reduced to "soil". Rock "fabric" not discernible or discernible only in small, scattered locations. Quartz may be present as dikes or stringers.

HARDNESS (for engineering description of rock – not to be confused with Moh's scale for minerals)

Very hard	Cannot be scratched with knife or sharp pick. Breaking of hand specimens requires several hard blows of geologist's pick.
Hard	Can be scratched with knife or pick only with difficulty. Hard blow of hammer required to detach hand specimen.
Moderately hard	Can be scratched with knife or pick. Gouges or grooves to ¼ in. deep can be excavated by hard blow of point of a geologist's pick. Hand specimens can be detached by moderate blow.
Medium	Can be grooved or gouged 1/16 in. deep by firm pressure on knife or pick point. Can be excavated in small chips to pieces about 1-in. maximum size by hard blows of the point of a geologist's pick.
Soft	Can be gouged or grooved readily with knife or pick point. Can be excavated in chips to pieces several inches in size by moderate blows of a pick point. Small thin pieces can be broken by finger pressure.
Very soft	Can be carved with knife. Can be excavated readily with point of pick. Pieces 1-in. or more in thickness can be broken with finger pressure. Can be scratched readily by fingernail.

Joint, Bedding, and Foliation Spacing in Rock [a]

Spacing	Joints	Bedding/Foliation
Less than 2 in.	Very close	Very thin
2 in. – 1 ft.	Close	Thin
1 ft. – 3 ft.	Moderately close	Medium
3 ft. – 10 ft.	Wide	Thick
More than 10 ft.	Very wide	Very thick

a. Spacing refers to the distance normal to the planes, of the described feature, which are parallel to each other or nearly so.

Rock Quality Designator (RQD) a

RQD, as a percentage	Diagnostic description
Exceeding 90	Excellent
90 – 75	Good
75 – 50	Fair
50 – 25	Poor
Less than 25	Very poor

a. RQD (given as a percentage) = length of core in pieces 4 in. and longer/length of run.

Joint Openness Descriptors

Openness	Descriptor
No Visible Separation	Tight
Less than 1/32 in.	Slightly Open
1/32 to 1/8 in.	Moderately Open
1/8 to 3/8 in.	Open
3/8 in. to 0.1 ft.	Moderately Wide
Greater than 0.1 ft.	Wide

References: American Society of Civil Engineers. Manuals and Reports on Engineering Practice - No. 56. Subsurface Investigation for Design and Construction of Foundations of Buildings. New York: American Society of Civil Engineers, 197[illegible]. U.S. Department of the Interior, Bureau of Reclamation, Engineering Geology Field Manual.

Terracon

Exhibit C-3

City of Dublin OHIO, USA
Approved for Construction
BP13-00400040
04/12/13

BEDROCK CONTOURS FROM S&ME BORINGS

BRIDGE STREET CIVIC CORE

PRELIMINARY – NOT FOR CONSTRUCTION

SUBSURFACE INVESTIGATION
SR 161 & RIVERSIDE DRIVE INTERSECTION IMPROVEMENTS
DUBLIN, FRANKLIN COUNTY, OHIO

S&ME Project No. 1171-13-042A

Report to:

EMH&T, Inc.
Columbus, Ohio

Prepared by:

S&ME

6190 Enterprise Ct.
Dublin, Ohio 43016

October 2013 (Issued)
November 2013 (Revised)

October 15, 2013 (Issue date)
November 12, 2013 (Revised date)
1171-13-042A

EMH&T, Inc.
5500 New Albany Road
Columbus, Ohio 43054

Attention: Mr. Michael Brehm, P.E.

Reference: **Subsurface Investigation – Revised**
SR 161 & Riverside Drive Intersection Improvements
Dublin, Franklin County, Ohio

Dear Mr. Brehm:

In accordance with our proposal dated July 15, 2013, which was authorized with EMH&T's Standard Sub-Contract agreement signed on August 28, 2013, S&ME, Inc. (S&ME) has completed the Geotechnical Investigation for the State Route 161 and Riverside Drive Intersection Improvements project in Dublin, Ohio. This report contains the information obtained from the borings, as well as a pavement subgrade evaluation for design and construction of the roadway.

This report is being reissued to reflect the following revisions:

- Updated boring elevations for 11 of the 20 borings based on survey performed by EMH&T following submission of the report; and,
- Boring B-214 was incorrectly labeled as being located at the proposed pedestrian underpass. Based on historic Boring B-28, recommendations for this structure remain unchanged.

We appreciate having been given the opportunity to be of service. Please do not hesitate to contact our office if you have any questions concerning our report.

Respectfully submitted,

S&ME, Inc.
Columbus, Ohio

STATE OF OHIO
CHRISTOPHER J. NYE
11-12-13
E-77034
REGISTERED PROFESSIONAL ENGINEER

Christopher J. Nye, P.E.
Project Engineer

Ronald T. Erb
Senior Reviewer

Submitted: 1 Electronic Copy (pdf) to Mr. Michael Brehm, P.E. (mbrehm@emht.com)

S&ME, INC. / 6190 Enterprise Court / Dublin, Ohio 43016 / *p* 614.793.2226 *f* 614.793.2410 / www.smeinc.com

TABLE OF CONTENTS

1. INTRODUCTION 3
2. SITE AND PROJECT DESCRIPTION 3
3. REGIONAL GEOLOGY 4
4. EXISTING INFORMATION 4
5. EXPLORATION 4
5.1 Field Investigation 4
5.2 Laboratory Testing 6
5.2.1 Results of Soil Classification Testing 6
5.2.2 Results of Moisture Testing 7
6. FINDINGS 7
6.1 Existing Pavement 7
6.2 General Subsurface Stratigraphy 7
6.2.1 Base Investigation 7
6.2.2 Preliminary Park Investigation 8
6.3 Groundwater Observations 9
7. ANALYSIS AND RECOMMENDATIONS 9
7.1 Roadway Embankment Construction 9
7.1.1 Embankment Foundation/Subgrade Preparation 9
7.1.2 “Fill” Areas 10
7.1.3 “At-Grade” and “Cut” Areas 10
7.1.4 Borrow Soil and Backfill Compaction Recommendations 11
7.1.5 Yielding Subgrade 12
7.2 Pavement Subgrade Evaluation 13
7.3 Pedestrian Underpass Recommendations 14
7.3.1 Shallow Foundation Bearing Resistance 14
7.3.2 Eccentricity (Overturning) 15
7.3.3 Sliding Resistance 15
7.3.4 Construction and Groundwater Considerations 16
7.3.5 Lateral Earth Pressures 16
7.4 Groundwater Considerations 17
8. FINAL CONSIDERATIONS 18

APPENDIX

Plate No.

Vicinity Map 1
Plan of Borings 2
Explanation of Symbols and Terms Used on Boring Logs for Soil and Rock ..... 3 and 4
Boring Logs ..... 5 through 24
Asphalt Core Photographs 25
Rock Core Photographs 26
Summary of Laboratory Test Results ..... 27 and 28
Atterberg Limits' Results 29
Gradation Curves ..... 30 through 47
Unconfined Compression Test Results ..... 48 through 50
Historic Boring Logs ..... 51 through 61

1. INTRODUCTION

S&ME, Inc. (S&ME) has completed the subsurface investigation for the proposed State Route 161 and Riverside Drive intersection improvements in Dublin, Ohio. These improvements are part of the City of Dublin's Bridge Street Corridor development. The work was performed in general accordance with our proposal dated July 15, 2013. The purpose of this investigation was to obtain subsurface information to allow us to characterize the subsurface conditions and to evaluate pavement subgrade conditions for pavement design to be performed by others. This report describes our understanding of the project, presents the results of the field exploration and laboratory testing, and discusses our conclusions and recommendations.

As requested by EMH&T, this investigation was not performed in strict accordance with ODOT's Specifications for Geotechnical Explorations (SGE). S&ME understands that the project documents will reference ODOT specifications for roadway construction; therefore we have included reference to ODOT Construction and Materials Specifications (CMS) in our report.

2. SITE AND PROJECT DESCRIPTION

Based on the Survey Scope Exhibit provided by EMH&T and showing requested boring and core locations, S&ME understands that the project will include:

- Construction of a new round-a-bout at the intersection of SR 161 and Riverside Drive. The new round-a-bout will be located approximately 125 feet to the east of the existing intersection;
- Realignment of Riverside Drive between SR 161 and Tuller Drive up to 250 feet to the east;
- Intersection modification of Riverside Drive with Dale Drive and Tuller Drive; and,
- A possible pedestrian tunnel beneath the realigned Riverside Drive.

The Bridge Street Corridor project includes substantial development within the project vicinity. As part of this investigation, S&ME was requested to perform preliminary borings for the following proposed developments. However, these explorations were for data collection only, and specific recommendations pertaining to design and construction of the proposed park facilities were not included in our authorized scope of work.

- Construction of new public park facilities along the existing Riverside Drive alignment, including a pedestrian bridge crossing the Scioto River and an overlook; and,
- Cul-de-sac extension to the north and south of North Riverview Street.

Based on preliminary plan and profile information provided by EMH&T for the realigned Riverside Drive between Dale Drive and Tuller Road (approximate STA 108+70 to STA 133+50), new vertical roadway alignment will require up to 10 feet of new fill to obtain

the anticipated roadway grades. Plan and profile information for the proposed roundabout was not available at the time of this report; however, it is our present understanding that the intersection will move to the east and be significantly higher in elevation than the present intersection.

The existing Riverside Drive and SR 161 within the project limits generally consists of four lanes. The new public park area presently consists of heavily wooded and steep banks along the Scioto River and includes a portion of the existing Riverside Drive. Existing development along the realigned portion of Riverside Drive includes, from the south to the north: the Bridge Point Shopping center with retail buildings and parking lot; commercial office buildings and associated parking; a former golf driving range with restaurant; and vacant lots with concrete parking lots.

3. REGIONAL GEOLOGY

Geologic references indicate that this site is located in a portion of Ohio which has been glaciated. The Columbus Lowland area is surrounded in all directions by relative uplands, having a broad regional slope toward the Scioto Valley with many larger streams. The overburden soils consist of predominantly loamy Wisconsinan-age till and extensive outwash in the Scioto Valley over deep Devonian to Mississippian-age carbonate rocks, shales, and siltstones. Shale bedrock is located at relatively shallow depths in this region at higher elevations and limestone bedrock is located at relatively shallow depths in the lower elevations near the Scioto River.

4. EXISTING INFORMATION

S&ME (formerly BBC&M) has significant experience in this area and has drilled borings for a number of projects in the vicinity of the site. These include investigations performed for FRA-270-22842, Emerald Parkway extension, Wendy's/Riverside Drive storm water improvements, Dale Center development, Old Dublin Stormwater Sewer project, A Touch of Class car wash, and Riverside Drive Area Improvements. The existing boring information indicates that limestone bedrock is present at depths ranging from 3.5 feet to greater than 15 feet below existing grade. Selected boring logs from previous investigations near the project site were used to supplement the current investigation. Copies of these boring logs are provided as Plates 51 through 61 in the Appendix.

S&ME also accessed the ODOT Office of Geotechnical Engineering's on-line Geotechnical Document Management System to search for any existing historical geotechnical explorations within the limits of this project; however, no existing additional information could be located.

5. EXPLORATION

5.1 Field Investigation

Between September 9 and September 22, 2013, S&ME was on-site and performed a total of twenty (20) borings and four (4) pavement cores. The approximate locations of the

borings are shown on the Plan of Borings submitted as Plate 2 in the Appendix of this report. The boring program consisted of the following:

Base Investigation

- Eight (8) borings (B-202, B-203, B-204, B-205, B-206, B-209, B-217, and B-218) along the existing SR 161 or Riverside Drive alignments;
- Seven (7) borings (B-208, B-210, B-211, B-213, B-214, B-215, and B-216) along the new, realigned portion of Riverside; and,
- Four (4) pavement cores (X-201, X-207, B-212, and X-219) within SR 161 and Riverside Drive obtained using a hand operated, generator-driven core machine.

Preliminary Park Investigation

- Two (2) borings (B-220 and B-221) for the North Riverview Street cul-de-sac extensions;
- Two (2) borings (B-222 and B-223) for the proposed pedestrian bridge crossing the Scioto River; and,
- One (1) boring (B-212) near the proposed overlook structure.

EMH&T staked locations for Borings B-212, B-214, B-216, and B-222, along with centerline stakes for the proposed Riverside Drive realignment. The remaining borings were located in the field by S&ME. The final boring locations were staked in the field by S&ME and adjusted based on existing utilities and drill rig accessibility; therefore the locations should be considered approximate. Following submission of our report, EMH&T performed additional surveying at the site and provided S&ME with surveyed ground surface elevations for 11 of the 20 borings, specifically Borings B-205, B-208, B-210, B-211, B-213, B-214, B-215, B-216, B-217, B-218, and B-223. The remaining boring elevations were estimated from available topographic information.

With the exception of Boring B-222, a truck-mounted drill rig using a 4½-inch outside diameter (O.D.) continuous-flight auger was used to advance the borings between sampling attempts. Due to accessibility challenges, a drill rig mounted on an All-Terrain Vehicle (ATV) chassis using a 3¼-inch inside diameter (I.D.) hollow-stem auger was used to perform Boring B-222. At regular intervals, disturbed but representative soil samples were obtained by lowering a 2-inch O.D. split-barrel sampler to the bottom of the boring and then driving the sampler into the soil with blows from a 140-pound hammer freely falling 30 inches (Standard Penetration Test, ASTM D1586).

Once auger refusal was encountered on the apparent bedrock surface in selected borings, a changeover to rotary drilling techniques was made in Borings B-210, B-214, B-222 and B-223. Five (5) to ten (10) feet of bedrock core was obtained in these borings using an N-sized wire line (Q) rock core barrel and diamond core bit using water as a circulating/ cooling fluid.

In the field, experienced personnel performed the following: 1) examined all samples recovered from the borings; 2) preserved representative portions of all samples in airtight glass jars or compartmented boxes; 3) prepared a log of each boring; 4) made seepage

and groundwater observations; 5) made hand-penetrometer measurements in specimens exhibiting cohesion; and, 6) provided liaison between the field work and the undersigned Project Engineer so that the exploration program could be modified in the event unusual or unexpected subsurface conditions were encountered.

At the completion of drilling, the borings the borings were backfilled with soil cuttings, and where borings were performed within pavement, the existing pavement surface was repaired with an equivalent thickness of cold-patch asphalt. All recovered samples were transported to S&ME's soils laboratory for further examination and testing.

5.2 Laboratory Testing

In the laboratory, the samples were visually identified and on a few representative samples, moisture contents, liquid and plastic limit determinations, and grain size analyses were performed. Results of these tests permit an evaluation of strength and subgrade support characteristics of the soil by comparison with similar soils for which these characteristics have been previously determined.

Based upon the results of the laboratory testing program, soil descriptions contained on the field logs were modified, if necessary, and laboratory-corrected logs are submitted as Plates 5 through 24 of the Appendix. Results of the laboratory tests are shown graphically on the individual boring logs and a summary of test results is presented on Plates 27 through 29 of the Appendix. Results of grain size analyses are presented on Plates 30 through 47.

In addition to the above index tests, three (3) unconfined compressive strength (UCS) tests were also performed on portions of the recovered limestone rock cores, with photographs of the recovered cores included as Plate 26 of the Appendix, and the results of the UCS tests included as Plates 48 through 50.

Soils described in this report have been classified generally in accordance with the Unified Soil Classification System. However, the system has been augmented by the use of special adjectives to designate the approximate percentages of minor soil components. An explanation of the symbols and terms used on the boring logs and definitions of the special adjectives used to denote the minor soil and rock components are presented on Plates 3 and 4 of the Appendix.

5.2.1 Results of Soil Classification Testing

Atterberg limit testing was performed to provide engineering classifications of the on-site soils exhibiting cohesion. A total of seventeen (17) Atterberg limits were performed with liquid limits ranging from 21 to 67 percent, and plasticity indices ranging from 4 to 45 percent for the soils tested. One additional sample was determined to be non-plastic. In addition, grain size distribution analyses were performed on the same eighteen (18) samples, with percentage of material finer than the No. 200 sieve ranging from 24.9 to 89.5 percent.

5.2.2 Results of Moisture Testing

Natural moisture content testing was performed on a total of eighteen (18) soil samples. The moisture contents of the on-site soils tested ranged from 5 to 28 percent. These values varied from 10 percent below to 5 percent above their corresponding plastic limit.

6. FINDINGS

Please refer to the boring logs submitted in the Appendix for information on the soil and groundwater/seepage conditions encountered at the boring locations. Inferences should not be made to the subsurface conditions in the areas between or away from the borings without performance of additional borings as well as field verification.

6.1 Existing Pavement

The existing pavement sections encountered in the borings and pavement cores are summarized in Table 1 below. Photographs of the asphalt cores are included in the Appendix on Plate 25.

Table 1: Existing Pavement Thicknesses

Boring No.	Existing Asphalt Thickness (in)	Existing Granular Base Thickness (in)
X-201	11½	--
B-202	11	6
B-205	5	6
B-206	13	5
X-207	13	--
B-209	7	5
B-210	3	8
B-211	6	6
B-212*	8½	2
B-217	12	6
B-218	12	4
X-219	15½	--
B-220	4	5
B-221	3	7
B-223	7	5

* Pavement Core X-212 was performed in combination with Boring B-212.

6.2 General Subsurface Stratigraphy

6.2.1 Base Investigation

<u>SR 161 / Riverside Drive Intersection</u>

Borings performed near the intersection of SR 161 and Riverside encountered either existing pavement consisting of 5 to 13 inches of asphalt and 5 to 6 inches of granular

base, or topsoil ranging in thickness from 2 to 4 inches. Beneath the surficial materials, natural soils generally consisted of medium-dense to very-dense gravel with Borings B-202, B-205, and B-209 containing layers of medium-stiff to very-stiff cohesive soil (silty clay). With the exception of Boring B-205, the borings terminated at auger refusal on limestone bedrock at depths ranging from 2.2 to 8.6 feet below existing grades. Boring B-205 was terminated at the planned depth of 10.0 feet after penetrating 2.0 feet into medium-stiff to stiff silty clay.

Riverside Drive Realignment

Beneath existing pavement of 3 to 12 inches of asphalt and 4 to 8 inches of granular base, or beneath 2 to 3 inches of topsoil, the borings along the Riverside Drive realignment encountered natural soils consisting of discontinuous layers of granular and cohesive material. The granular material was generally described as medium-dense to very-dense sand and/or gravel, with very-loose to loose zones encountered in Borings B-208, and B-218. The cohesive (silty clay) soils were very-stiff to hard, with medium-stiff zones encountered near the surface in Borings B-215 and B-217. Bedrock was encountered at depths ranging from 2.2 to 9.8 feet below grade, and samples of recovered bedrock core in Borings B-210 and B-214 were described as medium-hard, highly fractured gray-brown limestone.

Pedestrian Underpass

Historic boring B-28 was performed near the proposed pedestrian underpass and encountered 6 inches of topsoil overlying 7 feet of existing fill, which was described as stiff to hard silty clay. Beneath the surficial materials, the boring penetrated 2 feet of natural very-stiff silty clay before encountering hard limestone bedrock at an elevation of El. 796.4.

6.2.2 Preliminary Park Investigation

Park Overlook

Boring B-212 was located in the vicinity of the proposed park overlook. This boring was performed in combination with pavement core X-212. Beneath 8.5 inches of asphalt and 2 inches of granular base, 1.2 feet of very-stiff silty clay was underlain by 3.2 feet of very-dense fine to coarse gravel. The boring terminated at auger refusal on limestone bedrock at a depth of 5.5 feet (El. 793.0).

North Riverview Cul-de-sac

Borings B-220 and B-221 were performed near the proposed cul-de-sacs at the south and north ends of North Riverview Street, respectively. Existing asphalt consisted of 3 and 4 inches of asphalt with 7 and 5 inches of granular base, respectively. Each boring encountered approximately 7 feet of existing fill, which was described as either stiff to very-stiff cohesive (silty clay) or very-loose to medium-dense granular (sand and gravel) materials. Beneath the existing fill, Boring B-220 penetrated 0.7 feet of weathered limestone prior to encountering auger refusal on limestone bedrock at a depth of 8.7 feet (El. 794.3). Boring B-221 terminated at the planned depth of 10.0 feet after penetrating 2.0 feet into medium-dense gravel.

Pedestrian Bridge

One boring, B-222, was located near the proposed bridge pier near the Scioto River main channel. This boring encountered 6 inches of topsoil, then 3.2 feet of medium-stiff organic clayey silt, then 5.2 feet of medium-dense to very-dense gravel. Hard limestone bedrock was encountered at a depth of 8.9 feet (El. 753.1). Boring B-223 was located within Riverside Drive near the proposed pedestrian bridge's west abutment and encountered existing pavement consisting of 7 inches of asphalt and 5 inches of granular base. Five (5) feet of very-dense gravel was penetrated before encountering auger refusal at a depth of 6.0 feet on hard limestone containing many horizontal and vertical fractures.

6.3 Groundwater Observations

Groundwater observations were made as each boring was being advanced and measurements were made at the completion of drilling. Groundwater and/or seepage was encountered during drilling in Boring B-222 at the approximate Scioto River elevation. The remaining borings were noted as being "dry," that is to say no measurable amount of water had collected in the borehole prior to backfilling.

7. ANALYSIS AND RECOMMENDATIONS

The following recommendations pertain to the design and construction of the proposed roundabout at SR 161 and Riverside Drive, as well as the proposed realignment of Riverside Drive between SR 161 and Tuller Road. The boring performed as part of the Preliminary Park Investigation were for informational purposes only, and no recommendations were requested for the planned park facilities.

7.1 Roadway Embankment Construction

Preliminary profile information provided by EMH&T indicates that as much as 10 feet of new fill will be necessary to attain the desired profile for the realigned portion of Riverside Drive. Stability analyses were not performed for the proposed embankments.

7.1.1 Embankment Foundation/Subgrade Preparation

Prior to commencing earthwork operations, it is recommended that all existing pavement, structures, sod and topsoil, existing trees including their entire root mass, vegetation, and other miscellaneous materials be completely removed from the entire footprint of the proposed roadway/embankment. Prior to the placement of any new fill for embankment widening, it is recommended that the entire footprint of the widened embankment be exposed and proofrolled in accordance with 2010 ODOT Construction and Material Specifications (CMS) Item 204.06, and Item 204 of the 2009 ODOT Construction Inspection Manual of Procedures, to detect any soft, wet or weak zones that might be present. This is of particular importance in the vicinity of Borings B-215 and B-217 where medium-stiff to stiff soils were encountered at the approximate subgrade level.

If any such zones are present, the materials contained in these zones should be either scarified, dried, and thoroughly recompacted in place in accordance with ODOT Item 203.07, or be removed and the overexcavation filled in a controlled manner with compacted, suitable embankment material (Item 203.02) and the recommendations

presented in this report. S&ME recommends that the Geotechnical Engineer of Record or his/her designated representative be present at the time of proofrolling, as visual observation of these procedures may result in a partial reduction of undercutting of unsuitable soils.

7.1.2 "Fill" Areas

After all unsuitable materials have been removed during the site preparation process, and prior to commencing fill placement, it is recommended that horizontal benches be cut into all existing sloping surfaces to permit placement and compaction of new fill in horizontal lifts. In areas where new fill is to be placed on the side of an existing embankment which is steeper than 4H:1V, S&ME recommends that "Special Benching" procedures as outlined in the ODOT Geotechnical Bulletin GB2, *Special Benching and Sidehill Embankment Fills* (ODOT GB2), dated November 4, 2008, and the 2009 ODOT Construction Inspection Manual of Procedures be utilized.

Sketches illustrating several "typical" Special Benching configurations for sidehill fills on various slopes are included in Figures 1, 2 and 3 on pages 3 and 6 of the ODOT GB2 document. These configurations require a minimum distance of 8 feet between the crest of the bench back-slopes and the face of the new slope to permit compaction and grading equipment to work on a horizontal surface.

During Special Benching procedures, S&ME also recommends the following: 1) only one bench be exposed at any given time and that excavation of the next bench should not be permitted until embankment fill placement and compaction has been completed to the top of the backslope of the previous bench; and, 2) the length of any given bench that is exposed should not exceed the quantity of embankment fill which may be properly placed and compacted in one day. Additionally, S&ME recommends that the final, completed side slopes of embankments be constructed no steeper than 2H:1V.

As stated in the ODOT GB2, wherever "Special Benching" is used, Plan Note G110 from the ODOT L&D Manual, Vol. 3, should be included in the General Notes.

7.1.3 "At-Grade" and "Cut" Areas

- Soil Subgrade

Once the desired subgrade elevation has been attained in "cut" and "at-grade" areas, and after any unsuitable subgrade materials have been overexcavated and properly backfilled, the subgrade soil beneath the entire roadway and shoulder pavement area should be scarified and recompacted to a depth of 12 inches below the subgrade level in accordance with ODOT Item 204.03. During recompaction, the moisture content of the subgrade soil should be maintained or adjusted in accordance with ODOT Item 203.07.A.

Final subgrade proofrolling should be performed in accordance with Item 204.06 of the ODOT Construction and Material Specifications, and Section 204 of the 2006 ODOT Construction Inspection Manual of Procedures. If weak, wet, or soft zones are present, it

is recommended that the materials contained in these zones should be removed and replaced in accordance with Item 204.04. It is recommended, however, that the maximum depth of any necessary overexcavation be limited to 5 feet, even where the bottom remains unstable. In these cases, it is recommended that a geotextile (ODOT Item 712.09, Type D) be placed at the bottom of the overexcavation and then the undercut area backfilled with compacted granular material (ODOT Item 703.16.C Type C or D Granular Material). To assist the paving process, it may be desirable to top this granular backfill with a few inches of Item 703.16.C.2 (Type B).

Following the completion of the scarification, recompaction, and proofrolling of the subgrade in these cut and at-grade areas, it is strongly recommended that construction traffic be restricted from traveling on the compacted subgrade. Cohesive subgrade soils subjected to repetitious construction load and moisture fluctuations, which may occur as a result of exposure to rainfall and/or surface water runoff, may exhibit subgrade instability.

- Bedrock Subgrade

Although none of the boring performed for this investigation encountered bedrock within 2 feet of the proposed Riverside Drive subgrade level, Borings B-206 and B-211 encountered limestone bedrock a depth of 2.2 feet. Preliminary profile information for the proposed roundabout was not available at the time of this report. Because of the wide spacing of the borings, consideration should be given to the possibility that bedrock may be encountered at, or within 2 feet of, the proposed subgrade level.

In accordance with Item 204.05 of the ODOT Construction and Materials Specifications (CMS) the proposed pavement subgrade should be undercut to a depth of two feet below the bottom of the asphalt or concrete pavement. The overexcavation should also extend laterally to at least one foot outside the proposed pavement shoulder. This overexcavated material must be replaced with compacted, suitable embankment material (ODOT CMS Item 204.02) which possesses subgrade support characteristics consistent with the design CBR for the pavement section. S&ME recommends that consideration be given to using ODOT Item 703.16.C.2 Granular Material B (Item 304).

S&ME also recommends that consideration be given to placing a geotextile fabric (ODOT Item 712.09, Type D) at the bottom of subgrade overexcavations in rock prior to backfilling to reduce the potential for loss of backfill material and granular base course into any large fractures or voids that may be present in the limestone bedrock.

Additionally, it must be emphasized that **a direct correlation should not be made between the performance of the drilling rigs and the ability of conventional construction equipment to excavate bedrock at this site.**

7.1.4 Borrow Soil and Backfill Compaction Recommendations

Soil used to backfill any overexcavated subgrade materials or used as fill to attain the design subgrade level should consist of clean inorganic soils free of debris and cobbles,

and should be thoroughly compacted in accordance with ODOT specifications (Item 203, and when within 12 inches of subgrade level, Item 204). Additionally, S&ME recommends that the moisture content of all soil used as fill be maintained within -2% to +2% of the optimum moisture content during all compaction operations. Borrow materials should not be placed in a frozen condition or upon a frozen surface, and any sloping surfaces on which new fill is to be placed should first be benched in accordance with either Item 203.05 or ODOT GB2, depending on the slope of the existing ground surface at each location.

Compaction requirements for the construction of earthen embankments are based on ODOT CMS Item 203.07.B (or Item 204.03 when within 12 inches of subgrade level), which specifies a minimum percent compaction based on the dry unit weight of the type of soil fill being placed as borrow. S&ME recommends that sampling and testing of all proposed borrow material be performed prior to construction to verify that the borrow soils are suitable for the planned construction. Additionally, **all soil used as new fill or backfill within 3 feet of the proposed subgrade level must be capable of providing subgrade support characteristics in a final compacted state that are no less than the value used for the design of new pavement (see "Pavement Subgrade Evaluation" section of this report).**

It should be noted that the cohesive soils encountered in the borings, if exposed to inclement weather or rainfall, may rapidly absorb additional moisture and weaken. It is imperative that these soil types not be exposed to rainfall while in a loosened state (such as during disking and drying for moisture conditioning). Should these materials become sufficiently saturated that additional moisture conditioning is impractical, the material should be removed and wasted. Therefore, it is recommended that moisture conditioning only be performed when extended periods of suitable weather are anticipated, and that only the amount of borrow soil be exposed that may be moisture conditioned and properly compacted during suitable weather periods.

7.1.5 Yielding Subgrade

Laboratory tests performed on the near-surface soils at this site indicate that the anticipated subgrade soils may be considered moderately to highly plastic and sensitive to the effects of moisture and repetitive construction loads. Soil of this type may "fail" (i.e., rut or pump unacceptably) during proofrolling, especially if the subgrade soils become wet and the moisture contents increase. If such yielding does occur, it is imperative that the subgrade be stabilized before a full-depth pavement is constructed, even if an aggregate base is to be used.

Restricting construction activity and permitting the subgrade to dry will frequently eliminate yielding if weather conditions are favorable. If exceptionally good drying weather is not expected or does not occur, however, it will likely be necessary to scarify the subgrade to a depth of eight to twelve inches and to recompact the loosened soil subsequent to a period of drying and aerating. The process of drying and aerating is dependent entirely upon weather conditions, and it would be advisable to limit the work area to a size which can be scarified and compacted the same day to avoid exposure to

precipitation. If scarification and aeration do not result in significant drying so that compaction can be accomplished the same day, it must be concluded that the weather is not favorable for the procedure.

Another procedure that can be used to improve a yielding subgrade would be to remove or "undercut" severely disturbed areas to a depth of twelve inches or greater and to fill these areas with a more suitable, compacted soil. This procedure is usually performed during the original site preparation but, if yielding does not become evident until after the subgrade has been exposed to repetitive preliminary paving operations, this procedure would have to be repeated prior to performing the paving work.

Other procedures for improving an unusually weak, wet or severely yielding subgrade include the use of chemical stabilization (lime, lime/fly-ash, cement, etc.). At times, it is possible to use a geogrid or geotextile in conjunction with the aggregate to provide the added support necessary to place the pavement without improving the subgrade. It is not necessarily predicted that the natural soils at this site will yield and become unstable. It is believed, however, that you should be made aware of this phenomenon which can occur even in soils which appear to be exceptionally strong when initially exposed in cuts, and of the advisability of improving a yielding subgrade before constructing pavements.

7.2 Pavement Subgrade Evaluation

It is anticipated that the subgrade for the pavements within the site will consist of natural medium-stiff to hard silty clay deemed suitable for pavement support following favorable proofrolling, or newly placed controlled fill. Given the variable nature of the subgrade soil and based on laboratory tests performed on the near surface soils, along with ODOT Group Index correlations, it is recommended that the following values be used for to design the new pavement sections:

California Bearing Ratio (CBR):	3%
Resilient Modulus (MR):	3,600 psi
Modulus of Subgrade Reaction (k):	100 pci

These subgrade support values may be used during the pavement design for this project provided that the entire proposed pavement subgrade is prepared in strict accordance with Item 204 of the 2010 ODOT ”Construction and Materials Specifications” (CMS), and the recommendations presented in this report. **Based on the conditions encountered in the borings, it should be anticipated that portions of the existing subgrade may not provide a CBR value equal to or greater than 3% and will need to be removed and wasted.**

This subgrade evaluation also assumes that the subgrade for the new roadways is composed of the materials encountered in the borings. If, at the time of construction, it is determined that the subgrade may consist of materials significantly different than those encountered, the pavement design subgrade criteria should be reviewed and, if necessary, modified.

Implementing these subgrade support parameters will also require that all borrow soil placed within 3 feet of the final subgrade level is capable of providing subgrade support parameters no lower than the above values. For this reason, S&ME suggests inclusion of the following notes in the General Notes of the project plans under the subheading associated with embankment construction:

> *All borrow soil placed within 3 feet of the final subgrade level must be capable of providing subgrade support parameters no lower than the values used to design the new pavement. Prior to commencing the construction of new fill embankments, representative bulk samples of each type of proposed earthen borrow soil shall be obtained and tested in the laboratory (ASTM D 1883/AASHTO T 193) to verify that the potential borrow soil is capable of providing a California Bearing Ratio (CBR) value equal to or greater than 3% in a properly compacted state.*

In addition to proper subgrade preparation, we recommend that the pavement design and construction include surface and subsurface drainage measures. Water which infiltrates the pavement and remains trapped within the pavement components during traffic loading is one of the leading causes of premature pavement failure. Effective design measures include the use of perimeter swales, perimeter edge drains, curbs, or a combination of these features to collect surface water runoff from areas adjacent to the pavement. Cohesive subgrade soils should be crowned or sloped to promote drainage of infiltrating water towards subsurface drainage collection systems.

7.3 Pedestrian Underpass Recommendations

At the time of this report the specific type of culvert for the proposed pedestrian underpass was not finalized; therefore, structural loading, foundation sizes and bearing elevations were not provided to S&ME. It is anticipated that foundations for the three- or four-sided culvert and wingwalls will bear at approximately Elevation 794.

7.3.1 Shallow Foundation Bearing Resistance

Based on historic Boring B-28, excavations for the culvert and wingwall foundations will extend into medium-hard to hard limestone. To distribute the loading over uneven rock surfaces and to minimize differential or point loading of the precast structural elements, such as the bottom of a four-sided box culvert, S&ME recommends that a 12-inch layer of crushed aggregate, such as ODOT CMS Item 304 and No. 57 stone, be placed between the box culvert bottom and the bedrock surface.

Table 2 on the following page summarizes the recommended nominal and factored unit bearing resistances (q_n and q_R) at the service and strength limit states for spread foundations bearing in medium-hard to hard limestone. In order to achieve the recommended factored bearing resistance provided in Table 2, the bearing surface should be carefully cleaned, with any weathered or fractured rock being removed, prior to placement of concrete. In addition, the bedrock exposed at the foundation bearing

elevation should be evaluated by a qualified Geotechnical Engineer to confirm that the footings bear on suitable material.

Table 2: Recommended Bearing Capacities (Nominal and Factored) for Spread Footings at the Pedestrian Underpass – Service and Strength Limit States

Limit State	Anticipated Bearing Elevation (ft)	Recommended Nominal Bearing Resistance, q_n (ksf)*	Resistance Factor, φ_b	Recommended Factored Bearing Resistance, q_R (ksf)*
Service	~ 794	30.0	1.0**	30.0
Strength		35.0	0.45***	15.8

*** For vertical loading only. Foundations may need to extend deeper to generate passive pressure to resist lateral loads.**
**** Article 10.5.5.1 of the 2010 AASHTO LRFD.**
***** Table 10.5.5.2.2-1 of 2010 AASHTO LRFD, footings on rock.**

Foundation sizes were not available at the time of this report; however, considering similar culvert projects, settlements are expected to be less than ½-inch provided the site preparation and foundation construction are performed in accordance with the recommendations provided in this report.

The portion of the sidewalls of the foundation excavations in the soil above the bedrock should be either sloped back or braced in accordance with the most recent OSHA excavation guidelines. Any surface water will need to be diverted away from the foundation excavation area during excavation and construction of the culvert foundations. The foundation bearing surfaces should be kept dry and free from standing water during all construction activities, and loose rock should be removed prior to placing concrete.

As these recommendations have been based on the currently available preliminary information, S&ME requests the opportunity to review the final proposed foundation design to verify that the intent of our recommendations has been followed.

7.3.2 Eccentricity (Overturning)

Proposed spread foundations for the structure which are subjected to eccentric loadings should be designed in accordance with Articles 10.6.1.3, 10.6.3.3 and 11.6.3 of the latest AASHTO LRFD specifications. Once the footing design has been finalized, the structural design should confirm that the eccentricity of the foundation is less than three-eighths (3/8) of the appropriate footing dimension (width and/or length) (AASHTO Article 10.6.3.3 – Footing on Rock).

7.3.3 Sliding Resistance

Sliding resistance to lateral loads is provided by the weight of the structure in combination with the friction developed along the bottom of the foundations at the footing/aggregate interface as well as from passive resistance from the bedrock. The factored resistance against failure by sliding (R_R) should be determined using Eq.

10.6.3.4-1 of the AASHTO LRFD Bridge Design Specifications, 2010 Interim Revisions. Because the proposed foundations will likely bear on either a prepared aggregate base or on highly weathered limestone bedrock, S&ME recommends that the nominal sliding resistance (R_R) be calculated by multiplying the total vertical force (V) acting on the foundation by 0.80 (tan φ_f) as shown in Eq. 10.6.3.4-2 of the AASHTO LRFD specifications. The factored resistance to sliding may then be computed using a resistance factor for shear resistance (φ_τ) of 0.80.

Additional resistance to sliding of spread footings could be derived from increasing the width of the footing or from passive pressure developed along the inside toe of the footing or a shear key. A nominal passive resistance of 600 psf per foot of effective embedment depth into the limestone bedrock should be used for the footings provided that the footings will bear at or below the anticipated bearing elevation shown in Table 2 of this report, and provided the footing concrete is placed flush ("neat") against the rock face of the excavation. Passive resistance should be neglected above the anticipated depth of scour and/or frost. S&ME recommends a resistance factor for passive resistance (φ_{ep}) of 0.50 be used to compute the factored passive resistance. It is important that all loosened rock be removed from the face of the foundation excavation that will provide the passive resistance.

7.3.4 Construction and Groundwater Considerations

During this investigation, significant groundwater was not encountered. However, S&ME recommends that the sides and bottoms of all excavations be monitored during the construction of the structure. In addition, it is recommended that all excavations for the proposed structure foundations be protected from surface runoff and storm water flow. Groundwater seepage may also emanate from fractures within the bedrock or from granular seams or zones in the soil encountered above the bedrock; however, the quantity of water is anticipated to be limited and may likely be controlled by bailing or with portable pumps.

Additionally, all excavations should be either sloped back or braced in accordance with the most recent OSHA excavation guidelines.

7.3.5 Lateral Earth Pressures

The proposed culvert and wingwalls must be designed to withstand lateral earth pressures, as well as hydrostatic pressures, that may develop behind the structure. The magnitude of the lateral earth pressures varies on the basis of soil type, permissible wall movement, and the configuration of the backfill.

To minimize lateral earth pressures, the zone behind the headwalls and culvert should be backfilled with granular soil, and the backfill should be effectively drained. For effective drainage, a zone of free-draining gravel (ODOT CMS Item 518.03) should be used directly behind the structures for a minimum thickness of 18 inches in accordance with ODOT CMS Item 518.05. This granular zone should drain to either weepholes or a pipe, so that hydrostatic pressures do not develop against the walls.

The type of backfill beyond the free-draining granular zone will govern the magnitude of the pressure to be used for structural design. Pressures of a relatively low magnitude will be developed by the use of granular backfill, whereas a cohesive (clay) backfill will result in the development of much higher pressures.

It is recommended that granular backfill be used behind the culvert. The backfill should be placed in a wedge formed by the back of the structure and a line rising from the base of the structure base at an angle no greater than 60 degrees from the horizontal. Granular backfill behind the structure should be compacted in accordance with ODOT Item 203, "Roadway Excavation and Embankment," of the most recent CMS. Overcompaction in areas directly behind the walls should be avoided as this might cause damage to the structure.

If proper drainage (ODOT CMS Item 518.05) is used and the granular backfill is placed and compacted in the wedge described previously, an equivalent fluid unit weight of 55 pounds per cubic foot (pcf) may be used considering an “at rest” earth pressure condition, meaning wall movements less than 0.25 percent of the wall height is permitted. If proper drainage is not provided, an “at rest” equivalent fluid unit weight of 90 pcf is recommended for use during design.

If proper drainage is incorporated and granular backfill is provided and compacted as specified, an equivalent fluid unit weight of 35 pcf may be used if a wall movement equivalent to 0.25 percent the height of the wall (H) is allowed to occur. Such movement is considered sufficient to mobilize an active earth pressure condition. Without proper drainage, but with granular backfill and permissible wall movement, an equivalent fluid unit weight of 80 pcf should be used.

Compacted cohesive materials tend alternatively to shrink, expand and creep over periods of time and create significant lateral pressures on any adjacent structures. Cohesive materials also require a greater amount of movement to mobilize an active earth pressure condition. Because of the long-term adverse effects, it is recommended that, if proper drainage (ODOT Item 518.03) is provided, an equivalent fluid unit weight of 90 pcf (at-rest) and 65 pcf (active) be used for design of the structure resisting the lateral loads imparted by drained, cohesive backfill. Without proper drainage, S&ME recommends that the structural design be performed using equivalent fluid unit weights of 110 pcf (at-rest) and 95 pcf (active).

The structure must also be designed to withstand the vertical load resulting from the weight of any fill and pavement that may be placed over the structure in addition to traffic surcharge loads. To estimate vertical loading, a total unit weight of 130 pcf may be used for soil and granular fill materials.

7.4 Groundwater Considerations

Based on observations made during the field work, it is not anticipated that significant quantities of groundwater will be encountered during construction activities. Shallow excavations, such as subgrade over-excavations, extending through only cohesive soil

may encounter small amounts of seepage. Deeper excavations, such as excavations for any utilities, extending through granular seams, pockets/lenses, or layers may encounter larger groundwater flows. The quantities of groundwater encountered are anticipated to be controllable by bailing or pumping from temporary sumps. If pumping from sump pits is not effectively keeping the groundwater below excavation levels, then S&ME should be retained to provide additional recommendations.

During construction, surface runoff and precipitation should not be permitted to collect and stand in excavations as the soil will absorb water. Soils softened by standing water or disturbed by construction activities should be removed from excavations before pavement is placed. Additionally, all excavations should be either sloped back or braced in accordance with the most recent OSHA excavation guidelines.

8. FINAL CONSIDERATIONS

The analyses, conclusions and recommendations presented in this report are based on project information provided by EMH&T. S&ME should be retained to review the final design plans and specifications to verify that the intent of our engineering recommendations have been properly incorporated into the design documents. It is also recommended that S&ME be retained to observe the subgrade proofrolling, perform fill/backfill testing, and observe construction to confirm that our recommendations are valid or to modify them accordingly. S&ME cannot assume responsibility or liability for the adequacy of recommendations if we are not retained to observe construction.

The contents of this report are also based on the subsurface conditions as they existed at the time of our field investigation, and further on the assumption that the exploratory borings are representative of actual subsurface conditions throughout the area investigated. It should be noted that actual subsurface conditions between and beyond the borings might differ from those encountered at the boring locations. If subsurface conditions are encountered during construction that vary from those discussed in this report, S&ME should be notified immediately so that we may evaluate the effects, if any, on design and construction.

APPENDIX

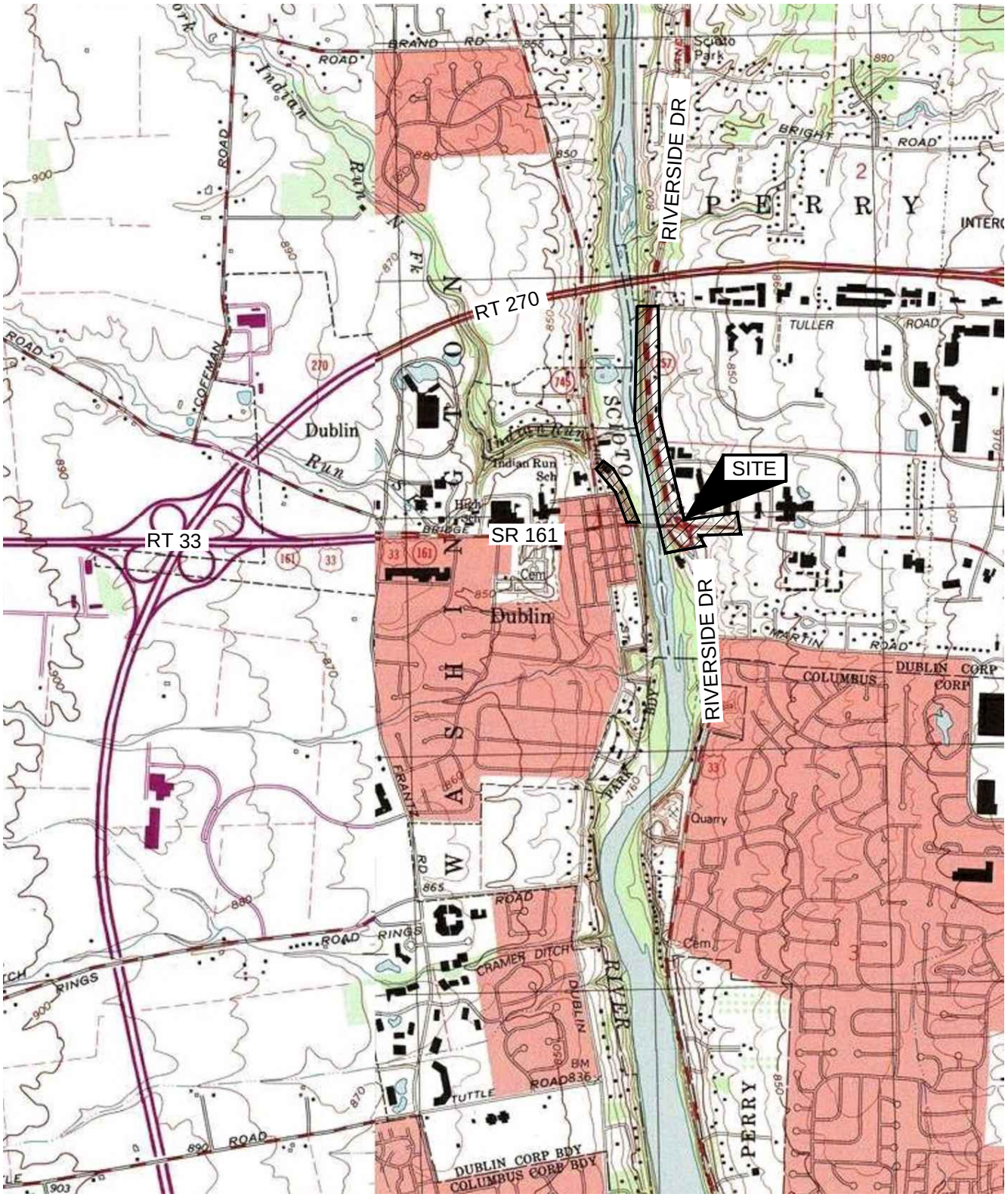

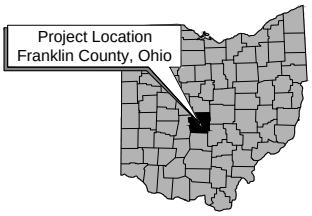

USGS Mapping:
Franklin Quad

0 2000 4000

SCALE IN FEET

VICINITY MAP

SR 161/RIVERSIDE DR. IMPROVEMENTS
FRANKLIN COUNTY, DUBLIN, OHIO

Project: 1171-13-042A	
Drawing Date: 10-3-2013	
Last Updated: 10-10-2013	
Drawn By: PRR	
Approved By: WML	
Scale: GRAPHIC	1:1

S&ME
WWW.SMEINC.COM
ENGINEERING FIRM. 03530

PLATE 1

Images: ~AERIAL FOR REF..tif ~COFFMAN PARK.jp2 ~TOPO\map.JPG
Xrefs:
File Last Updated: Oct 10, 2013
Plot Info: 10-10-2013 @ 1:26pm By: prock
S&ME Filename: I:\DEPTS\cadd\Drawings\BST Projects\1171-Geotechnical\1171-13-042\1171-13-042A\PLANS\SR 161RIVERSIDE DR IMPROVEMENTS_VICINITY MAP.dwg Layout: V-Map

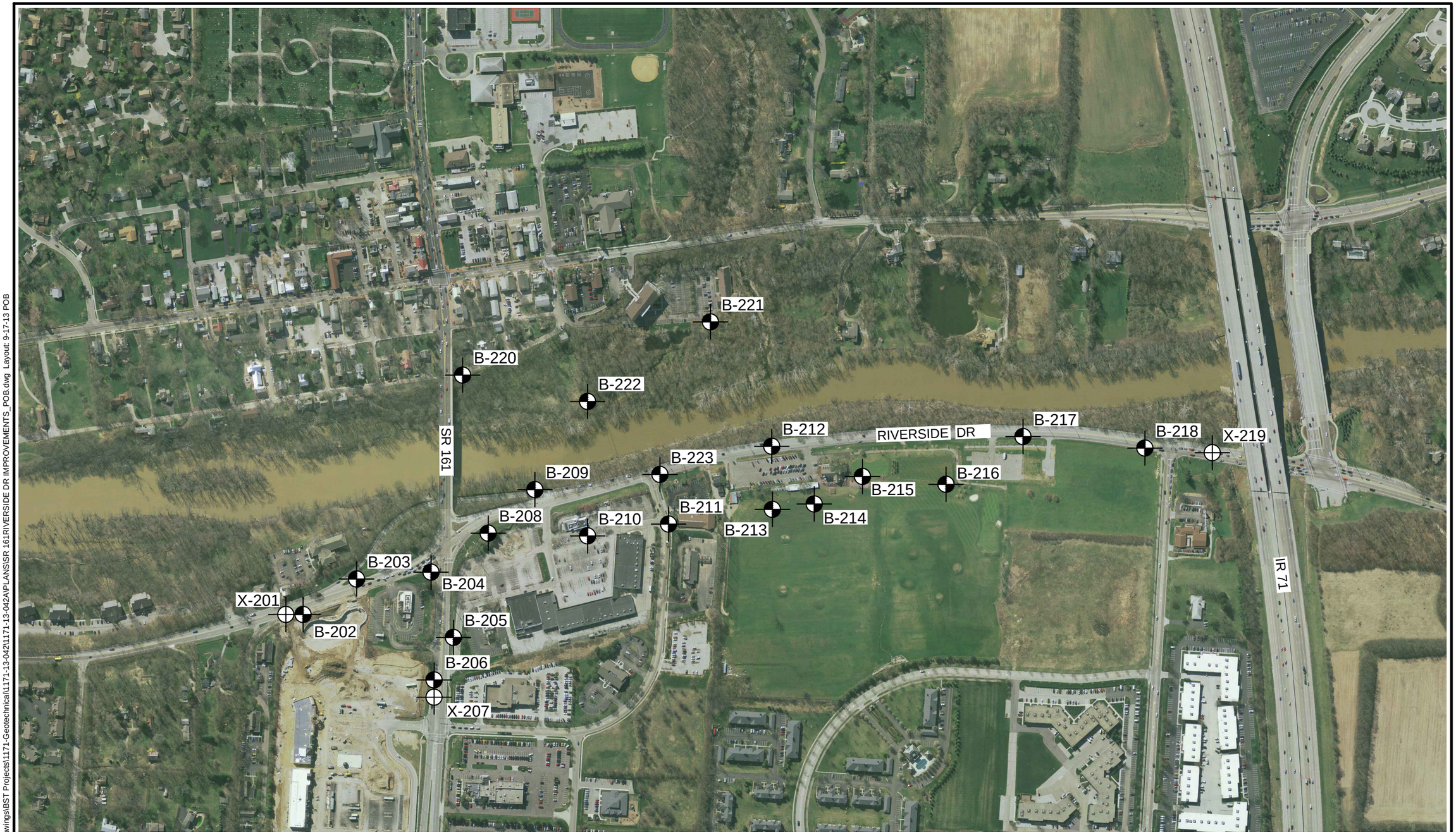

0 400 800

SCALE INFEET

PAVEMENT CORE X-212 PERFORMED IN COMBINATION WITH BORING B-212

LEGEND

B-1 BORING NUMBER AND LOCATION

X-1 PAVEMENT CORE NUMBER AND LOCATION

PLAN OF BORINGS

SR 161/RIVERSIDE DR. IMPROVEMENTS
DUBLIN, OHIO

Project: 1171-13-042A	Drawn By: PRR	
Drawing Date: 9-17-2013	Approved By: WML	
Last Updated: 11-11-2013	Scale: GRAPHIC	1:1

S&ME
WWW.SMEINC.COM
ENGINEERING FIRM. 03530

PLATE 2

Images: ~Riverside Drive Aerial.jp2 ~TOPOImap.JPG
Xrefs:
File Last Updated: Nov 11, 2013
Plot Info: 11-11-2013 @ 11:03am By: prock
S&ME Filename: I:\DEPTS\cadd\Drawings\BST Projects\1171-Geotechnical\1171-13-042\1171-13-042A\PLANS\SR 161RIVERSIDE DR IMPROVEMENTS_POB.dwg Layout: 9-17-13 POB

EXPLANATION OF SYMBOLS AND TERMS USED ON BORING LOGS FOR SAMPLING AND DESCRIPTION OF SOIL

SAMPLING DATA

- Blocked-in "SAMPLES" column indicates sample was attempted and recovered within this depth interval.

- Sample was attempted within this interval but not recovered.

2/5/9 - The number of blows required for each 6-inch increment of penetration of a "Standard" 2-inch O.D. split-barrel sampler, driven a distance of 18 inches by a 140-pound hammer freely falling 30 inches. The raw "blowcount" or "N" is equal to the sum of the second and third 6-inch increments of penetration. Addition of one of the following symbols indicates the use of a split-barrel other than the 2" O.D. sampler:

- 2S - 2½"O.D. split-barrel sampler
- 3S - 3" O.D. split-barrel sampler

N_{60} - Corrected Blowcount = [(S&ME Drill Rod Energy Ratio) / (0.60 Standard)] X N_{raw}

P - Shelby tube sampler, 3" O.D., hydraulically pushed.

R - Refusal of sampler in very-hard or dense soil, or on a resistant surface.

50-2" - Number of blows (50) to drive a split-barrel sampler a certain number of inches (2), other than the normal 6-inch increment.

SD - Split-barrel sampler (S) advanced by weight of drill rods (D).

SH - Split-barrel sampler (S) advanced by combined weight of rods and drive Hammer (H).

SOIL DESCRIPTIONS

All soils have been classified basically in accordance with the Unified Soil Classification System, but this system has been augmented by the use of special adjectives to designate the approximate percentages of minor components, as follows:

Adjective	Percent by Weight
trace	1 to 10
little	11 to 20
some	21 to 35
"and"	36 to 50

The following terms are used to describe density and consistency of soils:

Term (Granular Soils)	Blows per foot (N_{60})
Very-loose	Less than 5
Loose	5 to 10
Medium-dense	11 to 30
Dense	31 to 50
Very-dense	Over 50

Term (Cohesive Soils)	Qu (tsf)
Very-soft	Less than 0.25
Soft	0.25 to 0.5
Medium-stiff	0.5 to 1.0
Stiff	1.0 to 2.0
Very-stiff	2.0 to 4.0
Hard	Over 4.0

EXPLANATION OF SYMBOLS AND TERMS USED ON BORING LOGS FOR SAMPLING AND DESCRIPTION OF ROCK

SAMPLING DATA

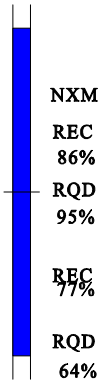

When bedrock is encountered and rock core samples are attempted, the "SAMPLING EFFORT" column is used to record the type of core barrel used (NXM), the percentage of core recovered (REC) for each run of the sampler, and the Rock Quality Designation (RQD) value. Rock-core barrels can be of either single- or double-tube construction, and a special series of double-tube barrels, designated by the suffix M, is commonly used to obtain maximum core recovery in very-soft or fractured rock. Three basic groups of barrels are used most often in subsurface investigations for engineering purposes, and these groups and the diameters of the cores obtained are as follows:

AX, AW, AXM, AWM	-	1-1/8 inches
BX, BW, BXM, BWM	-	1-5/8 inches
NX, NW, NXM, NWM	-	2-1/8 inches

Rock Quality Designation (RQD) is expressed as a percentage and is obtained by summing the total length of all core pieces which are at least 4 inches long and then dividing this sum by the total length of core run. It has been found that there is a reasonably good relationship between the RQD value and the general quality of rock for engineering purposes. This relationship is shown as follows:

RQD - %	General Quality
0 - 25	Very-poor
25 - 50	Poor
50 - 75	Fair
75 - 90	Good
90 - 100	Excellent

ROCK HARDNESS

THE FOLLOWING TERMS ARE USED TO DESCRIBE ROCK HARDNESS:

Term	Meaning	Mohs' Hardness
Very-soft	Rock such as shale can be easily picked apart by the fingers. Sandstone is poorly cemented and very friable. The rock resembles hard clay or dense sand, but has rock structure.	Less than 1
Soft	Rock such as shale, siltstone or limestone can be scratched or powdered by fingernail pressure. Sandstone is mostly poorly cemented, and individual sand grains can be separated from the main rock mass by a fingernail.	1 to 1½
Medium-hard	Rock cannot be scratched by a fingernail, but can be powdered by a knife. Sandstone is mostly well cemented, but individual grains can be removed by scratching with a knife.	2½ to 5½
Hard	Rock is well cemented and cannot be powdered by a knife. Rock can be powdered by a steel file.	5½ to 6½
Very-hard	Rock cannot be scratched by a steel file and the core sample rings when struck with a hammer.	Greater than 6½

LOG OF BORING NO. B-202
SR161/RIVERSIDE DRIVE IMPROVEMENTS
DUBLIN, OHIO

S&ME

LOCATION: **See Plate 2 of Appendix.** ELEVATION: **793 ±** DATE: **9/9/13**

DRILLING METHOD: **4-1/2" O.D. Continuous-flight Auger** COMPLETION DEPTH: **6.9'**

SAMPLER(S): **2" O.D. Split-barrel Sampler**

ELEV.	DEPTH, FEET	SAMPLE NUMBER	SAMPLE	SAMPLE EFFORT	N_{60}	SAMPLE REC-%	DESCRIPTION	NATURAL CONSISTENCY INDEX / NATURAL MOISTURE CONTENT (PLASTIC LIMIT — LIQUID LIMIT; 10 20 30 40)	TEST RESULTS
	0						ASPHALT - 11 INCHES		
792.1									
791.5							GRANULAR BASE - 6 INCHES		
790.5		1		7 / 4 / 4	10	40	Stiff gray mottled with brown silty clay, some fine to coarse sand, some fine to coarse gravel.		H=1.0-2.0 G
789.6				4			Very-stiff gray silty clay, trace fine to coarse sand.		
		2		5 / 7	15	67	Very-stiff brown silty clay, trace to little fine to coarse sand, trace fine to coarse gravel.		H=2.0-2.5
	5	3		3 / 5 / 6	14	60			H=2.0
786.5		4		10 / 50-5"R					
786.1							Very-dense gray fine to coarse gravel, some fine to coarse sand, trace silt (weathered limestone).		
	10						- No seepage encountered. - Encountered auger refusal on limestone bedrock at 6.9'. - Boring located using field pacing and taping methods and should be considered approximate. - Elevations estimated from Google Earth® and should be considered approximate.		
	15								
	20								
	25								

2010 NEW DEFAULT BORING LOG-W/ N60

WATER LEVEL: "Dry"
WATER NOTE: At Completion
DATE: 9/9/13

SYMBOLS USED TO INDICATE TEST RESULTS

G - Gradation
Q - Uncon Comp
T - Triax Comp
C - Consol.
(See Separate Curves)

H - Penetrometer (tsf)
W - Unit Dry Wt (pcf)
D - Relative Dens (%)

Drill Rod Energy Ratio : .76
Last Calibration Date : 02/19/13
Drill Rig Number : Truck 55(AW)

JOB: 1171-13-042A

LOG OF BORING NO. B-203
SR161/RIVERSIDE DRIVE IMPROVEMENTS
DUBLIN, OHIO

S&ME

LOCATION: **See Plate 2 of Appendix.** ELEVATION: **793 ±** DATE: **9/11/13**

DRILLING METHOD: **4-1/2" O.D. Continuous-flight Auger** COMPLETION DEPTH: **4.0'**

SAMPLER(S): **2" O.D. Split-barrel Sampler**

ELEV.	DEPTH, FEET	SAMPLE NUMBER	SAMPLE	SAMPLE EFFORT	N_{60}	SAMPLE REC-%	DESCRIPTION	NATURAL CONSISTENCY INDEX / NATURAL MOISTURE CONTENT (PLASTIC LIMIT – LIQUID LIMIT; 10 20 30 40)	TEST RESULTS
792.8	0						TOPSOIL - 2 INCHES		
		1		11/4/6	13	100	Medium-dense gray and brown fine to coarse gravel, some fine to coarse sand, some to "and" silty clay.		
		2		6/9/11	25	33			G
789.0		3		50-0"R					
	5						- No seepage encountered. - Encountered auger refusal on limestone bedrock at 4.0'. - Boring located using field pacing and taping methods and should be considered approximate. - Elevations estimated from Google Earth® and should be considered approximate.		
	10								
	15								
	20								
	25								

2010 NEW DEFAULT BORING LOG-W/ N60

WATER LEVEL: "Dry"
WATER NOTE: At Completion
DATE: 9/11/13

SYMBOLS USED TO INDICATE TEST RESULTS

G - Gradation
Q - Uncon Comp
T - Triax Comp
C - Consol.
(See Separate Curves)

H - Penetrometer (tsf)
W - Unit Dry Wt (pcf)
D - Relative Dens (%)

Drill Rod Energy Ratio : .75
Last Calibration Date : 02/20/13
Drill Rig Number : S&ME 550(AW)

JOB: 1171-13-042A

LOG OF BORING NO. B-204
SR161/RIVERSIDE DRIVE IMPROVEMENTS
DUBLIN, OHIO

S&ME

LOCATION: **See Plate 2 of Appendix.** ELEVATION: **798 ±** DATE: **9/11/13**

DRILLING METHOD: **4-1/2" O.D. Continuous-flight Auger** COMPLETION DEPTH: **7.2'**

SAMPLER(S): **2" O.D. Split-barrel Sampler**

ELEV.	DEPTH, FEET	SAMPLE NUMBER	SAMPLE	SAMPLE EFFORT	N_{60}	SAMPLE REC-%	DESCRIPTION	NATURAL CONSISTENCY INDEX / NATURAL MOISTURE CONTENT / PLASTIC LIMIT / LIQUID LIMIT (10 20 30 40)	TEST RESULTS
797.6	0						TOPSOIL - 4 INCHES		
		1		10 / 9 / 7	20	67	Medium-dense gray and brown fine to coarse gravel, some fine to coarse sand, little to some clayey silt.		
		2		2 / 4 / 5	11	67			G
	5	3		5 / 4 / 5	11	100			
		4		5 / 7 / 50-4"R		100			
790.8							- No seepage encountered. - Encountered auger refusal on limestone bedrock at 7.2'. - Boring located using field pacing and taping methods and should be considered approximate. - Elevations estimated from available topographic mapping and should be considered approximate.		
	10								
	15								
	20								
	25								

2010 NEW DEFAULT BORING LOG-W/ N60

WATER LEVEL: "Dry"
WATER NOTE: At Completion
DATE: 9/11/13

SYMBOLS USED TO INDICATE TEST RESULTS

G - Gradation
Q - Uncon Comp
T - Triax Comp
C - Consol.
(See Separate Curves)

H - Penetrometer (tsf)
W - Unit Dry Wt (pcf)
D - Relative Dens (%)

Drill Rod Energy Ratio : .75
Last Calibration Date : 02/20/13
Drill Rig Number : S&ME 550(AW)

JOB: 1171-13-042A

LOG OF BORING NO. B-205
SR161/RIVERSIDE DRIVE IMPROVEMENTS
DUBLIN, OHIO

S&ME

LOCATION: See Plate 2 of Appendix. ELEVATION: 809.6 DATE: 9/11/13

DRILLING METHOD: 4-1/2" O.D. Continuous-flight Auger COMPLETION DEPTH: 7.5'

SAMPLER(S): 2" O.D. Split-barrel Sampler

ELEV.	DEPTH, FEET	SAMPLE NUMBER	SAMPLE	SAMPLE EFFORT	N_{60}	SAMPLE REC-%	DESCRIPTION	NATURAL CONSISTENCY INDEX / NATURAL MOISTURE CONTENT / PLASTIC LIMIT / LIQUID LIMIT (10 20 30 40)	TEST RESULTS
809.2	0						ASPHALT - 5 INCHES		
808.7							GRANULAR BASE - 6 INCHES		
		1		6 / 7 / 9	20	100	Medium-dense gray and brown fine to coarse gravel, some fine to coarse sand, some silty clay.		G
805.6		2		8 / 7 / 6	16	67			
804.1	5	3		4 / 3 / 5	10	100	Loose gray fine to coarse gravel, some fine to coarse sand, "and" silty clay.		
802.1		4		3 / 4 / 5	11	67	Medium-stiff to stiff brown silty clay, little fine to coarse sand, trace fine gravel.		H=0.5-1.5
	10						- No seepage encountered. - Boring located using field pacing and taping methods and should be considered approximate. - Boring elevation provided by EMH&T.		
	15								
	20								
	25								

2010 NEW DEFAULT BORING LOG-W/ N60

WATER LEVEL: "Dry"
WATER NOTE: At Completion
DATE: 9/11/13

SYMBOLS USED TO INDICATE TEST RESULTS

G - Gradation, Q - Uncon Comp, T - Triax Comp, C - Consol. — See Separate Curves

H - Penetrometer (tsf)
W - Unit Dry Wt (pcf)
D - Relative Dens (%)

Drill Rod Energy Ratio : .75
Last Calibration Date : 02/20/13
Drill Rig Number : S&ME 550(AW)

JOB: 1171-13-042A

LOG OF BORING NO. B-206
SR161/RIVERSIDE DRIVE IMPROVEMENTS
DUBLIN, OHIO

S&ME

LOCATION: **See Plate 2 of Appendix.** ELEVATION: **819 ±** DATE: **9/9/13**

DRILLING METHOD: **4-1/2" O.D. Continuous-flight Auger** COMPLETION DEPTH: **2.2'**

SAMPLER(S): **2" O.D. Split-barrel Sampler**

ELEV.	DEPTH, FEET	SAMPLE NUMBER	SAMPLE	SAMPLE EFFORT	N_{60}	SAMPLE REC-%	DESCRIPTION	NATURAL CONSISTENCY INDEX / NATURAL MOISTURE CONTENT (PLASTIC LIMIT — LIQUID LIMIT; 10 20 30 40)	TEST RESULTS
	0						ASPHALT - 13 INCHES		
817.9									
817.5							GRANULAR BASE - 5 INCHES		
817.0		1	■	4 / 50-2"R		47	Very-stiff brown mottled with gray silty clay, some fine to coarse sand, trace fine gravel.		H=2.5 G
816.8							Weathered limestone.		
	5						- No seepage encountered. - Encountered auger refusal on limestone bedrock at 2.2'. - Boring located using field pacing and taping methods and should be considered approximate. - Elevations estimated from available topographic mapping and should be considered approximate.		
	10								
	15								
	20								
	25								

2010 NEW DEFAULT BORING LOG-W/ N60

WATER LEVEL: ▽ "Dry" ▼
WATER NOTE: At Completion
DATE: 9/9/13

SYMBOLS USED TO INDICATE TEST RESULTS

G - Gradation, Q - Uncon Comp, T - Triax Comp, C - Consol. — See Separate Curves

H - Penetrometer (tsf)
W - Unit Dry Wt (pcf)
D - Relative Dens (%)

Drill Rod Energy Ratio : .76
Last Calibration Date : 02/19/13
Drill Rig Number : Truck 55(AW)

JOB: 1171-13-042A

LOG OF BORING NO. B-208
SR161/RIVERSIDE DRIVE IMPROVEMENTS
DUBLIN, OHIO

S&ME

LOCATION: See Plate 2 of Appendix. ELEVATION: 798.1 DATE: 9/9/13

DRILLING METHOD: 4-1/2" O.D. Continuous-flight Auger COMPLETION DEPTH: 8.6'

SAMPLER(S): 2" and 2-1/2" O.D. Split-barrel Samplers

ELEV.	DEPTH, FEET	SAMPLE NUMBER	SAMPLE	SAMPLE EFFORT	N_{60}	SAMPLE REC-%	DESCRIPTION	NATURAL CONSISTENCY INDEX / NATURAL MOISTURE CONTENT (PLASTIC LIMIT — LIQUID LIMIT)	TEST RESULTS
797.9	0						TOPSOIL - 2 INCHES		
		1		19/20/22	53	67	Very-dense gray and brown fine to coarse gravel, some fine to coarse sand, some silty clay, contains few cobbles.		
795.1									
		2		4/4/4	10	67	Loose gray and brown fine to coarse gravel, little to some fine to coarse sand, some to "and" silty clay.		G
	5								
		3		3/3/3	8				
		2S		7		27			
789.6									
789.5		4		50-1"R		100	Weathered limestone.		
	10								
	15								
	20								
	25								

- No seepage encountered.
- Encountered cobbles at 1.5'.
- Encountered auger refusal on limestone bedrock at 8.6'.
- Boring located using field pacing and taping methods and should be considered approximate.
- Boring elevation provided by EMH&T.

2010 NEW DEFAULT BORING LOG-W/ N60

WATER LEVEL: "Dry"
WATER NOTE: At Completion
DATE: 9/9/13

SYMBOLS USED TO INDICATE TEST RESULTS

G - Gradation, Q - Uncon Comp, T - Triax Comp, C - Consol. — See Separate Curves

H - Penetrometer (tsf)
W - Unit Dry Wt (pcf)
D - Relative Dens (%)

Drill Rod Energy Ratio : .76
Last Calibration Date : 02/19/13
Drill Rig Number : Truck 55(AW)

JOB: 1171-13-042A

LOG OF BORING NO. B-209
SR161/RIVERSIDE DRIVE IMPROVEMENTS
DUBLIN, OHIO

S&ME

LOCATION: **See Plate 2 of Appendix.** ELEVATION: **796 ±** DATE: **9/11/13**

DRILLING METHOD: **4-1/2" O.D. Continuous-flight Auger** COMPLETION DEPTH: **5.5'**

SAMPLER(S): **2" O.D. Split-barrel Sampler**

ELEV.	DEPTH, FEET	SAMPLE NUMBER	SAMPLE	SAMPLE EFFORT	N_{60}	SAMPLE REC-%	DESCRIPTION	NATURAL CONSISTENCY INDEX / NATURAL MOISTURE CONTENT / PLASTIC LIMIT / LIQUID LIMIT (10 20 30 40)	TEST RESULTS
795.3	0						ASPHALT - 7 INCHES		
795.0							GRANULAR BASE - 5 INCHES		
793.5		1		14/16/10	33	100	Dense gray fine to coarse gravel, some fine to coarse sand, some silty clay.		G
792.0		2		8/9/5	18	100	Very-stiff gray mottled with brown silty clay, some fine to coarse sand, some fine to coarse gravel.		H=2.5-3.0
790.5	5	3		7/8/15	29	33	Medium-dense gray and brown fine to coarse gravel, some fine to coarse sand, some silty clay.		
	10						- No seepage encountered. - Encountered auger refusal on limestone bedrock at 5.3'. - Boring located using field pacing and taping methods and should be considered approximate. - Elevations estimated from available topographic mapping and should be considered approximate.		
	15								
	20								
	25								

2010 NEW DEFAULT BORING LOG-W/ N60

WATER LEVEL: "Dry"
WATER NOTE: At Completion
DATE: 9/11/13

SYMBOLS USED TO INDICATE TEST RESULTS

G - Gradation
Q - Uncon Comp
T - Triax Comp
C - Consol.
(See Separate Curves)

H - Penetrometer (tsf)
W - Unit Dry Wt (pcf)
D - Relative Dens (%)

Drill Rod Energy Ratio : .75
Last Calibration Date : 02/20/13
Drill Rig Number : S&ME 550(AW)

JOB: 1171-13-042A

LOG OF BORING NO. B-210
SR161/RIVERSIDE DRIVE IMPROVEMENTS
DUBLIN, OHIO

S&ME

LOCATION: See Plate 2 of Appendix. ELEVATION: 797.8 DATE: 9/10/13

DRILLING METHOD: 4-1/2" O.D. Continuous-flight Auger COMPLETION DEPTH: 11.1'

SAMPLER(S): 2" O.D. Split-barrel Sampler, NQ Rock Core Barrel

ELEV.	DEPTH, FEET	SAMPLE NUMBER	SAMPLE	SAMPLE EFFORT	N_{60}	SAMPLE REC-%	DESCRIPTION	NATURAL CONSISTENCY INDEX / NATURAL MOISTURE CONTENT (PLASTIC LIMIT – LIQUID LIMIT; 10 20 30 40)	TEST RESULTS
797.5	0						ASPHALT - 3 INCHES		
796.9							GRANULAR BASE - 8 INCHES		
		1		3 / 4 / 8	15	100	Hard brown mottled with gray silty clay, some fine to coarse sand, little fine to coarse gravel.		H=4.0-4.5 G
794.8							Medium-dense brown fine to coarse sand, "and" fine to coarse gravel, some clayey silt.		
		2		11 / 6 / 14	25	100			
793.3		2A				100	Very-stiff gray silty clay, little fine to coarse sand, some fine to coarse gravel.		H=2.5
	5								
792.0									
791.7		3		50-1"R		100	Weathered limestone.		
		4		REC 72% RQD 0%			Medium-hard gray-brown limestone, thickly bedded, ferriferous, crystalline, fossiliferous, vuggy, fractured to highly fractured.		
	10								
786.7									
							- No seepage or groundwater encountered prior to adding water for rock core. - Boring located using field pacing and taping methods and should be considered approximate. - Boring elevation provided by EMH&T.		
	15								
	20								
	25								

2010 NEW DEFAULT BORING LOG-W/ N60

WATER LEVEL: ▽ ▼
WATER NOTE:
DATE:

SYMBOLS USED TO INDICATE TEST RESULTS

G - Gradation
Q - Uncon Comp
T - Triax Comp
C - Consol.
(See Separate Curves)

H - Penetrometer (tsf)
W - Unit Dry Wt (pcf)
D - Relative Dens (%)

Drill Rod Energy Ratio : .76
Last Calibration Date : 02/19/13
Drill Rig Number : Truck 55(AW)

JOB: 1171-13-042A

LOG OF BORING NO. B-211
SR161/RIVERSIDE DRIVE IMPROVEMENTS
DUBLIN, OHIO

S&ME

LOCATION: See Plate 2 of Appendix. ELEVATION: 797.0 DATE: 9/10/13

DRILLING METHOD: 4-1/2" O.D. Continuous-flight Auger COMPLETION DEPTH: 2.2'

SAMPLER(S): 2" O.D. Split-barrel Sampler

ELEV.	DEPTH, FEET	SAMPLE NUMBER	SAMPLE	SAMPLE EFFORT	N_{60}	SAMPLE REC-%	DESCRIPTION	NATURAL CONSISTENCY INDEX / NATURAL MOISTURE CONTENT (PLASTIC LIMIT — LIQUID LIMIT) 10 20 30 40	TEST RESULTS
796.4	0						ASPHALT - 6 INCHES		
796.0							GRANULAR BASE - 6 INCHES		
		1	■	50-4"R		20	Very-dense gray and brown fine to coarse gravel, some fine to coarse sand, little silty clay.		
794.8									
	5								
	10								
	15								
	20								
	25								

- No seepage encountered.
- Encountered auger refusal on limestone bedrock at 2.2'.
- Boring located using field pacing and taping methods and should be considered approximate.
- Boring elevation provided by EMH&T.

2010 NEW DEFAULT BORING LOG-W/ N60

WATER LEVEL: "Dry"
WATER NOTE: At Completion
DATE: 9/10/13

SYMBOLS USED TO INDICATE TEST RESULTS

G - Gradation, Q - Uncon Comp, T - Triax Comp, C - Consol. — See Separate Curves

H - Penetrometer (tsf)
W - Unit Dry Wt (pcf)
D - Relative Dens (%)

Drill Rod Energy Ratio : .76
Last Calibration Date : 02/19/13
Drill Rig Number : Truck 55(AW)

JOB: 1171-13-042A

LOG OF BORING NO. B-212
SR161/RIVERSIDE DRIVE IMPROVEMENTS
DUBLIN, OHIO

S&ME

LOCATION: **See Plate 2 of Appendix.** ELEVATION: **798.5** DATE: **9/10/13**

DRILLING METHOD: **4-1/2" O.D. Continuous-flight Auger** COMPLETION DEPTH: **5.5'**

SAMPLER(S): **2" O.D. Split-barrel Sampler**

ELEV.	DEPTH, FEET	SAMPLE NUMBER	SAMPLE	SAMPLE EFFORT	N_{60}	SAMPLE REC-%	DESCRIPTION	NATURAL CONSISTENCY INDEX / NATURAL MOISTURE CONTENT (PLASTIC LIMIT — LIQUID LIMIT; 10 20 30 40)	TEST RESULTS
797.8	0						ASPHALT - 8.5 INCHES		
797.6							GRANULAR BASE - 2 INCHES		
		1		3/4/18	28	100	Very-stiff brown silty clay, little fine to coarse sand, trace fine gravel.		H=2.5-3.0 G LL=67%
796.2							Very-dense gray fine to coarse gravel, some fine to coarse sand, trace silt.		
		2		25/27/50	98	100			
793.0	5								
	10						- No seepage encountered. - Encountered auger refusal on limestone bedrock at 5.5'. - Boring located by EMH&T and relocated by S&ME using field pacing and taping methods and should be considered approximate. - Elevations estimated from available topographic mapping and should be considered approximate.		
	15								
	20								
	25								

2010 NEW DEFAULT BORING LOG-W/ N60

WATER LEVEL: "Dry"
WATER NOTE: At Completion
DATE: 9/10/13

SYMBOLS USED TO INDICATE TEST RESULTS

G - Gradation, Q - Uncon Comp, T - Triax Comp, C - Consol. — See Separate Curves

H - Penetrometer (tsf)
W - Unit Dry Wt (pcf)
D - Relative Dens (%)

Drill Rod Energy Ratio : .76
Last Calibration Date : 02/19/13
Drill Rig Number : Truck 55(AW)

JOB: 1171-13-042A

LOG OF BORING NO. B-213
SR161/RIVERSIDE DRIVE IMPROVEMENTS
DUBLIN, OHIO

S&ME

LOCATION: **See Plate 2 of Appendix.** ELEVATION: **798.7** DATE: **9/11/13**

DRILLING METHOD: **4-1/2" O.D. Continuous-flight Auger** COMPLETION DEPTH: **5.0'**

SAMPLER(S): **2" O.D. Split-barrel Sampler**

ELEV.	DEPTH, FEET	SAMPLE NUMBER	SAMPLE	SAMPLE EFFORT	N_{60}	SAMPLE REC-%	DESCRIPTION	NATURAL CONSISTENCY INDEX / NATURAL MOISTURE CONTENT (PLASTIC LIMIT — LIQUID LIMIT; 10 20 30 40)	TEST RESULTS
798.5	0						TOPSOIL - 2 INCHES		
		1	■	4 / 4 / 7	14	100	Hard gray mottled with brown silty clay, trace fine to coarse sand, trace fine to coarse gravel.		H=4.0-4.5 G LL=56%
795.7									
		2	■	12 / 23 / 32	69	100	Very-dense gray fine to coarse gravel, some fine to coarse sand, trace silty clay and silt.		
793.7	5								
	10								
	15								
	20								
	25								

- No seepage encountered.
- Encountered auger refusal on limestone bedrock at 5.0'.
- Boring located using field pacing and taping methods and should be considered approximate.
- Boring elevation provided by EMH&T.

2010 NEW DEFAULT BORING LOG-W/ N60

WATER LEVEL: "Dry"
WATER NOTE: At Completion
DATE: 9/11/13

SYMBOLS USED TO INDICATE TEST RESULTS

G - Gradation
Q - Uncon Comp
T - Triax Comp
C - Consol.
(See Separate Curves)

H - Penetrometer (tsf)
W - Unit Dry Wt (pcf)
D - Relative Dens (%)

Drill Rod Energy Ratio : .75
Last Calibration Date : 02/20/13
Drill Rig Number : S&ME 550(AW)

JOB: 1171-13-042A

LOG OF BORING NO. B-214
SR161/RIVERSIDE DRIVE IMPROVEMENTS
DUBLIN, OHIO

S&ME

LOCATION: **See Plate 2 of Appendix.** ELEVATION: **799.8** DATE: **9/11/13**

DRILLING METHOD: **4-1/2" O.D. Continuous-flight Auger** COMPLETION DEPTH: **14.2'**

SAMPLER(S): **2" O.D. Split-barrel Sampler, NQ Rock Core Barrel**

ELEV.	DEPTH, FEET	SAMPLE NUMBER	SAMPLE	SAMPLE EFFORT	N_{60}	SAMPLE REC-%	DESCRIPTION	NATURAL CONSISTENCY INDEX / NATURAL MOISTURE CONTENT (PLASTIC LIMIT – LIQUID LIMIT)	TEST RESULTS
799.5	0						TOPSOIL - 3 INCHES		
		1		4 / 11 / 50-4"R		93	Hard brown mottled with gray silty clay, trace fine to coarse sand, trace fine gravel.		H=4.0-4.5 G LL=56%
797.3							Medium-hard gray-brown limestone, highly weathered, thickly bedded, ferriferous, slightly crystalline, fossiliferous, vuggy, fractured to highly fractured.		
	5	2		REC 98% RQD 0%					
	10	3		REC 99% RQD 0%					
785.6									
	15						- No seepage or groundwater encountered prior to adding water for rock core. - Boring located by EMH&T. - Boring elevation provided by EMH&T.		
	20								
	25								

NATURAL CONSISTENCY INDEX / NATURAL MOISTURE CONTENT: PLASTIC LIMIT – LIQUID LIMIT; 10 20 30 40

WATER LEVEL: ▽ ▼
WATER NOTE:
DATE:

SYMBOLS USED TO INDICATE TEST RESULTS

G - Gradation, Q - Uncon Comp, T - Triax Comp, C - Consol. — See Separate Curves

H - Penetrometer (tsf)
W - Unit Dry Wt (pcf)
D - Relative Dens (%)

Drill Rod Energy Ratio : .75
Last Calibration Date : 02/20/13
Drill Rig Number : S&ME 550(AW)

JOB: 1171-13-042A

2010 NEW DEFAULT BORING LOG-W/ N60

LOG OF BORING NO. B-215
SR161/RIVERSIDE DRIVE IMPROVEMENTS
DUBLIN, OHIO

S&ME

LOCATION: **See Plate 2 of Appendix.** ELEVATION: **802.9** DATE: **9/11/13**

DRILLING METHOD: **4-1/2" O.D. Continuous-flight Auger** COMPLETION DEPTH: **6.8'**

SAMPLER(S): **2" O.D. Split-barrel Sampler**

ELEV.	DEPTH, FEET	SAMPLE NUMBER	SAMPLE	SAMPLE EFFORT	N_{60}	SAMPLE REC-%	DESCRIPTION	TEST RESULTS
802.7	0						TOPSOIL - 2 INCHES	
		1	■	SH / SH / 1	0	67	Medium-stiff to stiff brown mottled with gray silty clay, some fine to coarse sand, trace fine gravel.	H=0.5-1.5 G
799.9								
		2	■	2 / 2 / 3	6	100	Very-stiff brown silty clay, some fine to coarse sand, trace fine to coarse gravel.	H=3.0
797.4	5							
796.1		3	■	3 / 50-3"R		100	Very-stiff dark-gray and brown silty clay, little fine to coarse sand, little fine to coarse gravel.	H=2.5-3.0
	10						- No seepage encountered. - Encountered auger refusal on limestone bedrock at 6.8'. - Boring located using field pacing and taping methods and should be considered approximate. - Boring elevation provided by EMH&T.	
	15							
	20							
	25							

NATURAL CONSISTENCY INDEX — NATURAL MOISTURE CONTENT — PLASTIC LIMIT — LIQUID LIMIT — 10 20 30 40

WATER LEVEL: "Dry"
WATER NOTE: At Completion
DATE: 9/11/13

SYMBOLS USED TO INDICATE TEST RESULTS

G - Gradation, Q - Uncon Comp, T - Triax Comp, C - Consol. — See Separate Curves

H - Penetrometer (tsf)
W - Unit Dry Wt (pcf)
D - Relative Dens (%)

Drill Rod Energy Ratio : .75
Last Calibration Date : 02/20/13
Drill Rig Number : S&ME 550(AW)

JOB: 1171-13-042A

PLATE 17

2010 NEW DEFAULT BORING LOG-W/ N60

LOG OF BORING NO. B-216
SR161/RIVERSIDE DRIVE IMPROVEMENTS
DUBLIN, OHIO

S&ME

LOCATION: **See Plate 2 of Appendix.** ELEVATION: **806.8** DATE: **9/10/13**

DRILLING METHOD: **4-1/2" O.D. Continuous-flight Auger** COMPLETION DEPTH: **9.8'**

SAMPLER(S): **2" O.D. Split-barrel Sampler**

ELEV.	DEPTH, FEET	SAMPLE NUMBER	SAMPLE	SAMPLE EFFORT	N_{60}	SAMPLE REC-%	DESCRIPTION	TEST RESULTS
806.6	0						TOPSOIL - 2 INCHES	
		1	■	2 / 2 / 2	5	67	Very-stiff to hard gray silty clay, little fine to coarse sand, trace fine gravel, slightly organic.	H=2.5-4.0 G LL=50%
802.3		2	■	3 / 4 / 3	9	67		H=1.5-3.0
	5						Stiff to very-stiff gray mottled with brown silty clay, little fine to coarse sand, little fine to coarse gravel.	
800.3		3	■	1 / 1 / 4	6	67	Very-stiff brown silty clay, trace fine to coarse sand, trace fine gravel.	H=2.3-3.5
797.8		4	■	9 / 13 / 50-4"R		87	Very-dense gray and brown fine to coarse gravel, some fine to coarse sand, some silty clay.	
797.0	10							
							- No seepage encountered. - Boring located by EMH&T. - Boring elevation provided by EMH&T.	
	15							
	20							
	25							

NATURAL CONSISTENCY INDEX — NATURAL MOISTURE CONTENT — PLASTIC LIMIT — LIQUID LIMIT — 10 20 30 40

2010 NEW DEFAULT BORING LOG-W/ N60

WATER LEVEL: "Dry"
WATER NOTE: At Completion
DATE: 9/10/13

SYMBOLS USED TO INDICATE TEST RESULTS

G - Gradation, Q - Uncon Comp, T - Triax Comp, C - Consol. — See Separate Curves

H - Penetrometer (tsf)
W - Unit Dry Wt (pcf)
D - Relative Dens (%)

Drill Rod Energy Ratio : .76
Last Calibration Date : 02/19/13
Drill Rig Number : Truck 55(AW)

JOB: 1171-13-042A

LOG OF BORING NO. B-217
SR161/RIVERSIDE DRIVE IMPROVEMENTS
DUBLIN, OHIO

S&ME

LOCATION: **See Plate 2 of Appendix.** ELEVATION: **798.5** DATE: **9/10/13**

DRILLING METHOD: **4-1/2" O.D. Continuous-flight Auger** COMPLETION DEPTH: **7.3'**

SAMPLER(S): **2" O.D. Split-barrel Sampler**

ELEV.	DEPTH, FEET	SAMPLE NUMBER	SAMPLE	SAMPLE EFFORT	N_{60}	SAMPLE REC-%	DESCRIPTION	NATURAL CONSISTENCY INDEX / NATURAL MOISTURE CONTENT (PLASTIC LIMIT — LIQUID LIMIT; 10 20 30 40)	TEST RESULTS
	0						ASPHALT - 12 INCHES		
797.5									
797.0							GRANULAR BASE - 6 INCHES		
796.0		1		4 / 3 / 3	8	100	Medium-stiff to stiff dark-gray silty clay, trace fine to coarse sand, little fine to coarse gravel.		H=0.5-1.5
		1A				100	Medium-stiff to stiff brown silty clay, little fine to coarse sand, trace fine gravel.		H=0.5-1.5 G LL=54%
794.0		2		4 / 2 / 4	8	100			
793.0	5						Stiff to very-stiff brown silty clay, little fine to coarse sand, some fine to coarse gravel.		H=1.0-2.5
791.2		3		2 / 23 / 50-3"R		67	Very-stiff brown silty clay, little fine to coarse sand, little fine to coarse gravel, contains few silt lenses.		H=2.5-3.0
	10						- No seepage encountered. - Encountered auger refusal on limestone bedrock at 7.3'. - Boring located using field pacing and taping methods and should be considered approximate. - Boring elevation provided by EMH&T.		
	15								
	20								
	25								

2010 NEW DEFAULT BORING LOG-W/ N60

WATER LEVEL: "Dry"
WATER NOTE: At Completion
DATE: 9/10/13

SYMBOLS USED TO INDICATE TEST RESULTS

G - Gradation, Q - Uncon Comp, T - Triax Comp, C - Consol. — See Separate Curves

H - Penetrometer (tsf)
W - Unit Dry Wt (pcf)
D - Relative Dens (%)

Drill Rod Energy Ratio : .76
Last Calibration Date : 02/19/13
Drill Rig Number : Truck 55(AW)

JOB: 1171-13-042A

LOG OF BORING NO. B-218
SR161/RIVERSIDE DRIVE IMPROVEMENTS
DUBLIN, OHIO

S&ME

LOCATION: See Plate 2 of Appendix. ELEVATION: 798.9 DATE: 9/11/13

DRILLING METHOD: 4-1/2" O.D. Continuous-flight Auger COMPLETION DEPTH: 10.0'

SAMPLER(S): 2" O.D. Split-barrel Sampler

ELEV.	DEPTH, FEET	SAMPLE NUMBER	SAMPLE	SAMPLE EFFORT	N_{60}	SAMPLE REC-%	DESCRIPTION	NATURAL CONSISTENCY INDEX / NATURAL MOISTURE CONTENT (PLASTIC LIMIT – LIQUID LIMIT; 10 20 30 40)	TEST RESULTS
	0						ASPHALT - 12 INCHES		
797.9									
797.5							GRANULAR BASE - 4 INCHES		
		1	■	9 / 10 / 10	25	100	Medium-dense gray and brown fine to coarse sand, "and" fine to coarse gravel, little silt, trace clay.	●	G
795.6									
		2	■	6 / 2 / 2	5	67	Very-loose gray fine to coarse gravel, some fine to coarse sand, little silty clay.		
793.4	5								
		3	■	1 / 2 / 7	11	100	Loose to medium-dense brown and gray fine to coarse gravel, some to "and" fine to coarse sand, little to some silty clay.		
		4	■	2 / 2 / 4	8	100			
788.9	10						- No seepage encountered. - Caved at 6.0'. - Boring located using field pacing and taping methods and should be considered approximate. - Boring elevation provided by EMH&T.		
	15								
	20								
	25								

2010 NEW DEFAULT BORING LOG-W/ N60

WATER LEVEL: "Dry" | Caved at 6.0'
WATER NOTE: At Completion | Caved at 6.0'
DATE: 9/11/13 | 9/11/13

SYMBOLS USED TO INDICATE TEST RESULTS
G - Gradation, Q - Uncon Comp, T - Triax Comp, C - Consol. — See Separate Curves
H - Penetrometer (tsf), W - Unit Dry Wt (pcf), D - Relative Dens (%)

Drill Rod Energy Ratio : .75
Last Calibration Date : 02/20/13
Drill Rig Number : S&ME 550(AW)

JOB: 1171-13-042A

LOG OF BORING NO. B-220
SR161/RIVERSIDE DRIVE IMPROVEMENTS
DUBLIN, OHIO

S&ME

LOCATION: See Plate 2 of Appendix. ELEVATION: 803 ± DATE: 9/9/13

DRILLING METHOD: 4-1/2" O.D. Continuous-flight Auger COMPLETION DEPTH: 8.7'

SAMPLER(S): 2" O.D. Split-barrel Sampler

ELEV.	DEPTH, FEET	SAMPLE NUMBER	SAMPLE	SAMPLE EFFORT	N_{60}	SAMPLE REC-%	DESCRIPTION	NATURAL CONSISTENCY INDEX / NATURAL MOISTURE CONTENT (PLASTIC LIMIT — LIQUID LIMIT; 10 20 30 40)	TEST RESULTS
802.6	0						ASPHALT - 4 INCHES		
802.1							GRANULAR BASE - 5 INCHES		
		1	■	7 / 7 / 6	16	100	FILL: Medium-dense gray fine gravel, some fine to coarse sand, trace silt.		
800.0									
		2	■	2 / 2 / 3	6	100	FILL: Loose gray fine to coarse sand, "and" fine to coarse gravel, trace silt, trace clay.	●	G
797.5	5								
		3	■	1 / 2 / 1	4	67	FILL: Very-loose gray and brown fine gravel, some fine to coarse sand, trace silt.		
795.0									
794.3		4	■	50-2"R		100	Weathered limestone		
	10						- No seepage encountered. - Encountered auger refusal on limestone bedrock at 8.7'. - Boring located using field pacing and taping methods and should be considered approximate. - Elevations estimated from Google Earth® and should be considered approximate.		
	15								
	20								
	25								

2010 NEW DEFAULT BORING LOG-W/ N60

WATER LEVEL: ▽ "Dry" ▼
WATER NOTE: At Completion
DATE: 9/9/13

SYMBOLS USED TO INDICATE TEST RESULTS

G - Gradation, Q - Uncon Comp, T - Triax Comp, C - Consol. — See Separate Curves

H - Penetrometer (tsf)
W - Unit Dry Wt (pcf)
D - Relative Dens (%)

Drill Rod Energy Ratio : .76
Last Calibration Date : 02/19/13
Drill Rig Number : Truck 55(AW)

JOB: 1171-13-042A

LOG OF BORING NO. B-221
SR161/RIVERSIDE DRIVE IMPROVEMENTS
DUBLIN, OHIO

S&ME

LOCATION: **See Plate 2 of Appendix.** ELEVATION: **774 ±** DATE: **9/9/13**

DRILLING METHOD: **4-1/2" O.D. Continuous-flight Auger** COMPLETION DEPTH: **10.0'**

SAMPLER(S): **2" O.D. Split-barrel Sampler**

ELEV.	DEPTH, FEET	SAMPLE NUMBER	SAMPLE	SAMPLE EFFORT	N_{60}	SAMPLE REC-%	DESCRIPTION	NATURAL CONSISTENCY INDEX / NATURAL MOISTURE CONTENT (PLASTIC LIMIT – LIQUID LIMIT; 10 20 30 40)	TEST RESULTS
773.7	0						ASPHALT - 3 INCHES		
773.1							GRANULAR BASE - 7 INCHES		
		1	■	4 / 4 / 4	10	67	FILL: Stiff to very-stiff brown and gray silty clay, little fine to coarse sand, little fine to coarse gravel.		H=1.5-2.5 G
771.2							FILL: Stiff to very-stiff gray silty clay, little fine to coarse sand, trace fine gravel.		
		2	■	3 / 3 / 4	9	100			H=1.0-2.5
	5								
768.5							FILL: Medium-dense gray fine to coarse gravel, some fine to coarse sand, "and" organic clayey silt, contains few cobbles.		
		3	■	4 / 7 / 5	15	100			
766.0							Medium-dense gray and brown fine to coarse gravel, some fine to coarse sand, some silty clay.		
		4	■	5 / 6 / 9	19	100			
764.0	10								
							- No seepage encountered. - Encountered cobbles at 6.5'. - Boring located using field pacing and taping methods and should be considered approximate. - Elevations estimated from available topographic mapping and should be considered approximate.		
	15								
	20								
	25								

2010 NEW DEFAULT BORING LOG-W/ N60

WATER LEVEL: "Dry"
WATER NOTE: At Completion
DATE: 9/9/13

SYMBOLS USED TO INDICATE TEST RESULTS

G - Gradation, Q - Uncon Comp, T - Triax Comp, C - Consol. — See Separate Curves

H - Penetrometer (tsf)
W - Unit Dry Wt (pcf)
D - Relative Dens (%)

Drill Rod Energy Ratio : .76
Last Calibration Date : 02/19/13
Drill Rig Number : Truck 55(AW)

JOB: 1171-13-042A

LOG OF BORING NO. B-222
SR161/RIVERSIDE DRIVE IMPROVEMENTS
DUBLIN, OHIO

S&ME

LOCATION: See Plate 2 of Appendix. ELEVATION: 762 ± DATE: 9/16/13

DRILLING METHOD: 3-1/4" I.D. Hollow-stem Auger COMPLETION DEPTH: 18.9'

SAMPLER(S): 2" O.D. Split-barrel Sampler, NQ Rock Core Barrel

ELEV.	DEPTH, FEET	SAMPLE NUMBER	SAMPLE	SAMPLE EFFORT	N_{60}	SAMPLE REC-%	DESCRIPTION	NATURAL CONSISTENCY INDEX / NATURAL MOISTURE CONTENT (PLASTIC LIMIT – LIQUID LIMIT; 10 20 30 40)	TEST RESULTS
761.5	0						TOPSOIL - 6 INCHES		
		1		1 / 2 / 4	8	100	Medium-stiff dark-gray organic clayey silt, little fine to coarse sand, trace fine gravel.		H=0.5-1.0
758.3		2		4 / 8 / 8	21	100	Medium-dense to very-dense brown fine to coarse gravel, some fine to coarse sand, some silt, little clay.		G
	5	3		3 / 50-5"R		60			
753.1		4		50-3"R		20			
		5		REC 100% RQD 100%			Hard gray-brown limestone, slightly weathered, very thickly bedded, ferriferous, slightly crystalline, stylolitic, cherty, fossiliferous. - Qu= 9,717 psi from 9.6' to 10.1'		
	10	6		REC 100% RQD 62%					
	15	7		REC 98% RQD 98%			- Qu= 11,365 psi from 15.6' to 16.1'		
743.1	20						- Groundwater measured at 1.5' prior to adding water for rock core. - Boring located by EMH&T. - Elevations estimated from available topographic mapping and should be considered approximate.		
	25								

2010 NEW DEFAULT BORING LOG-W/ N60

WATER LEVEL: ▽ ▼
WATER NOTE:
DATE:

SYMBOLS USED TO INDICATE TEST RESULTS

G - Gradation, Q - Uncon Comp, T - Triax Comp, C - Consol. — See Separate Curves

H - Penetrometer (tsf)
W - Unit Dry Wt (pcf)
D - Relative Dens (%)

Drill Rod Energy Ratio : .795
Last Calibration Date : 10/14/11
Drill Rig Number : D50

JOB: 1171-13-042A

LOG OF BORING NO. B-223
SR161/RIVERSIDE DRIVE IMPROVEMENTS
DUBLIN, OHIO

S&ME

LOCATION: **See Plate 2 of Appendix.** ELEVATION: **795.7** DATE: **9/10/13**

DRILLING METHOD: **4-1/2" O.D. Continuous-flight Auger** COMPLETION DEPTH: **16.0'**

SAMPLER(S): **2" O.D. Split-barrel Sampler, NQ Rock Core Barrel**

ELEV.	DEPTH, FEET	SAMPLE NUMBER	SAMPLE	SAMPLE EFFORT	N_{60}	SAMPLE REC-%	DESCRIPTION	NATURAL CONSISTENCY INDEX / NATURAL MOISTURE CONTENT (PLASTIC LIMIT — LIQUID LIMIT) 10 20 30 40	TEST RESULTS
795.0	0						ASPHALT - 7 INCHES		
794.7							GRANULAR BASE - 5 INCHES		
		1		50-1"R		100	Very-dense gray fine to coarse gravel, little fine to coarse sand, trace silt, contains many limestone fragments.		
		2		50-2"R		100			
	5								
789.7		3		50-0"R		100	Hard gray-brown limestone, highly weathered, very thickly bedded, stylolitic, fossiliferous, vuggy, many horizontal and vertical fractures.		
		4		REC 94% RQD 0%					
	10								
		5		REC 100% RQD 6%			- Qu=8,415 psi from 12.3' to 12.6'.		
	15								
779.7							- No seepage or groundwater encountered prior to adding water for rock core. - Boring located using field pacing and taping methods and should be considered approximate. - Boring elevation provided by EMH&T.		
	20								
	25								

2010 NEW DEFAULT BORING LOG-W/ N60

WATER LEVEL: ▽ ▼
WATER NOTE:
DATE:

SYMBOLS USED TO INDICATE TEST RESULTS

G - Gradation
Q - Uncon Comp
T - Triax Comp
C - Consol.
(See Separate Curves)

H - Penetrometer (tsf)
W - Unit Dry Wt (pcf)
D - Relative Dens (%)

Drill Rod Energy Ratio : .76
Last Calibration Date : 02/19/13
Drill Rig Number : Truck 55(AW)

JOB: 1171-13-042A

1 Pavement Core X-201

2 Pavement Core X-207

3 Pavement Core X-212

4 Pavement Core X-219

PLATE 25

S&ME	**SR 161 & Riverside Drive Intersection Improvements** **Dublin, Ohio**	1171-13-042A SR 161/Riverside Dr. Improvements	
		Taken by: PMJ	Date Taken: 9/15/13

1 Photograph of B-210 bedrock core from 6.1' to 11.1'

2 Photograph of B-214 bedrock core from 4.2' to 14.2'

3 Photograph of B-222 bedrock core from 8.9' to 18.9'

4 Photograph of B-223 bedrock core from 6.0' to 16.0'

PLATE 26

S&ME	SR 161 & Riverside Drive Intersection Improvements Dublin, Ohio	1171-13-042A SR 161/Riverside Dr. Improvements	
		Taken by: PMJ	Date Taken: 9/18/13

SUMMARY OF LABORATORY TEST RESULTS

BORING	G'int Id.	MC	LL	PL	PI	GRADATION			COMPACTION		TRIAXIAL					DIRECT SHEAR			UNCONFIN COMPRESS	CONSOLID.	SPECIFIC GRAVITY	UNIT WEIGHT DRY	REMOLDED	PERMEABILITY				RELATIVE DENSITY	LOI	ROCK CORE	SHELBY TUBE	pH
						sieve	Hydrometer short	Hydrometer long	standard	modified	unconsol. undrain	consolid undrain	w/pores	drained	drained	undrain	residual							cohesive	non/cohes	rigid wall	flexible wall					
		%	%	%	%	* SEE INDIVIDUAL TEST CURVES																PCF						%	%			
B-202	**2.25**	**17**	**39**	**19**	**20**	*	*																									
B-203	**3.25**	**14**	**42**	**21**	**21**	*	*																									
B-204	**3.25**	**8**	**28**	**18**	**10**	*	*																									
B-205	**2.25**	**10**	**35**	**17**	**18**	*	*																									
B-206	**2.25**	**16**	**28**	**14**	**14**	*	*																									
B-208	**4.25**	**12**	**35**	**19**	**16**	*	*																									
B-209	**1.75**	**8**	**30**	**17**	**13**	*	*																									
B-210	**1.75**	**13**	**31**	**18**	**13**	*	*																									
B-210	**6.10**																													*		
B-212	**1.75**	**25**	**67**	**22**	**45**	*	*																									
B-213	**1.75**	**22**	**56**	**24**	**32**	*	*																									
B-214	**1.75**	**21**	**56**	**24**	**32**	*	*																									
B-214	**4.20**																													*		
B-215	**1.75**	**20**	**31**	**18**	**13**	*	*																									
B-216	**1.75**	**19**	**50**	**24**	**26**	*	*																									
B-217	**2.75**	**28**	**54**	**23**	**31**	*	*																									
B-218	**2.25**	**9**	**21**	**17**	**4**	*	*																									
B-220	**4.25**	**5**	**NP**	**NP**	**NP**	*	*																									
B-221	**1.75**	**17**	**37**	**18**	**19**	*	*																									
B-222	**4.25**	**21**	**32**	**22**	**10**	*	*																									

S&ME

TESTING SUMMARY - STANDARD

PROJECT SR161/RIVERSIDE DRIVE IMPROVEMENTS
LOCATION DUBLIN, OHIO
JOB NO. 1171-13-042A DATE 10/14/13

SUM REG

SUMMARY OF LABORATORY TEST RESULTS

BORING	G'int Id.	MC	LL	PL	PI	GRADATION			COMPACTION		TRIAXIAL					DIRECT SHEAR			UNCONFIN COMPRESS	CONSOLID.	SPECIFIC GRAVITY	UNIT WEIGHT DRY	REMOLDED	PERMEABILITY				RELATIVE DENSITY	LOI	ROCK CORE	SHELBY TUBE	pH
						sieve	Hydrometer short	Hydrometer long	standard	modified	unconsol. undrain	consolid undrain	w/ pores	drained	drained	undrain	residual							cohesive	non/cohes	rigid wall	flexible wall					
		%	%	%	%	* SEE INDIVIDUAL TEST CURVES																PCF						%	%			
B-222	**9.60**																	*												*		
B-222	**15.60**																	*														
B-223	**12.30**																	*												*		

SUM REG

S&ME

TESTING SUMMARY - STANDARD

PROJECT SR161/RIVERSIDE DRIVE IMPROVEMENTS
LOCATION DUBLIN, OHIO
JOB NO. 1171-13-042A DATE 10/14/13

ATTERBERG LIMITS' RESULTS

AASHTO CLASSIFICATION

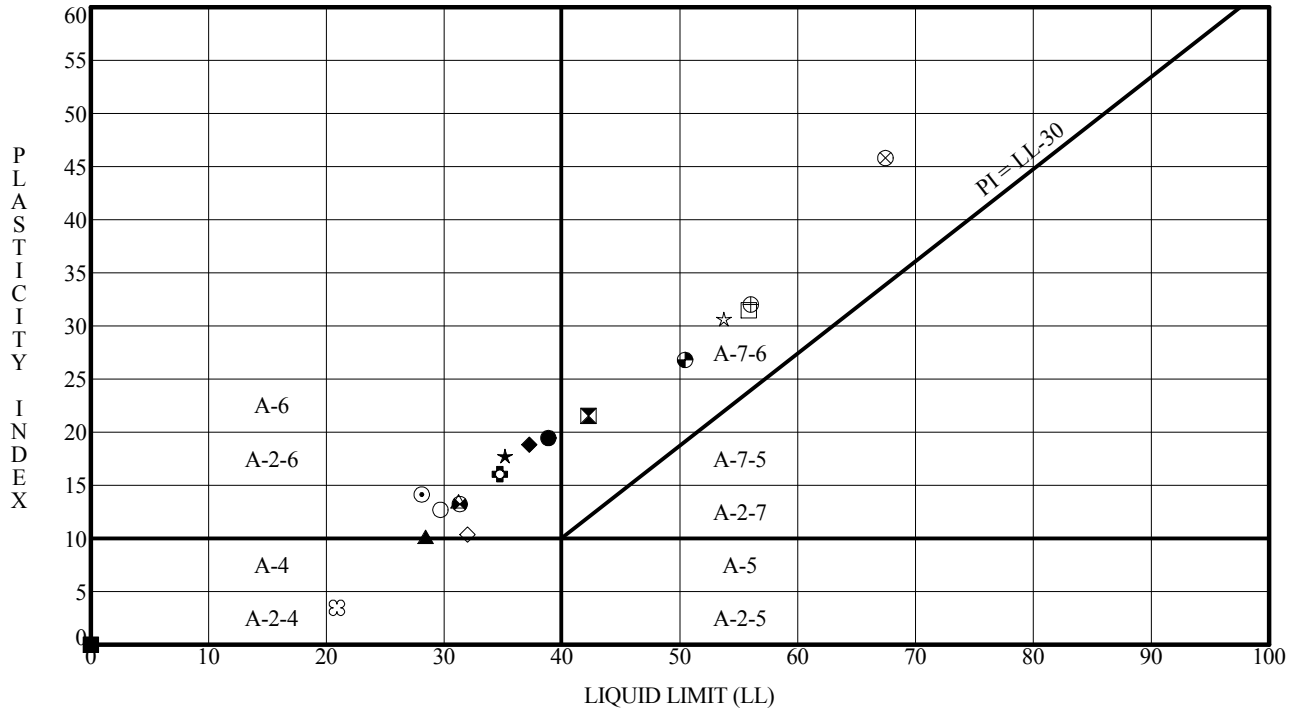

ALPI-HRB

	Specimen Id.	Depth	MC	LL	PL	PI	Fines	ODOT Classification
●	B-202	2.25	16.8	38.8	19.4	20.0	53.9	A-6b(8)
⊠	B-203	3.25	13.8	42.2	20.7	21.0	36.9	A-7-6(3)
▲	B-204	3.25	7.7	28.4	18.3	10.0	24.9	A-2-4(0)
★	B-205	2.25	10.2	35.2	17.4	18.0	26.6	A-2-6(1)
⊙	B-206	2.25	15.8	28.1	14.0	14.0	60.6	A-6a(7)
✿	B-208	4.25	12.4	34.7	18.7	16.0	45.8	A-6b(4)
○	B-209	1.75	8.4	29.7	17.0	13.0	27.6	A-2-6(0)
△	B-210	1.75	13.3	31.2	17.7	13.0	59.8	A-6a(6)
⊗	B-212	1.75	25.1	67.4	21.6	45.0	88.3	A-7-6(20)
⊕	B-213	1.75	22.5	56.0	24.0	32.0	87.4	A-7-6(19)
□	B-214	1.75	20.8	55.9	24.4	32.0	89.5	A-7-6(19)
⊛	B-215	1.75	19.8	31.3	18.1	13.0	65.3	A-6a(7)
◕	B-216	1.75	19.5	50.4	23.6	26.0	82.3	A-7-6(16)
☆	B-217	2.75	27.6	53.7	23.1	31.0	80.2	A-7-6(19)
✿	B-218	2.25	9.2	20.9	17.4	4.0	25.8	A-2-4(0)
■	B-220	4.25	4.9	NP	NP	NP	12.6	A-1-a(0)
◆	B-221	1.75	16.9	37.2	18.4	19.0	61.2	A-6b(9)
◇	B-222	4.25	20.5	32.0	21.6	10.0	48.9	A-4a(3)

PROJECT SR161/RIVERSIDE DRIVE IMPROVEMENTS
LOCATION DUBLIN, OHIO
JOB NO. 1171-13-042A **DATE** 10/14/13

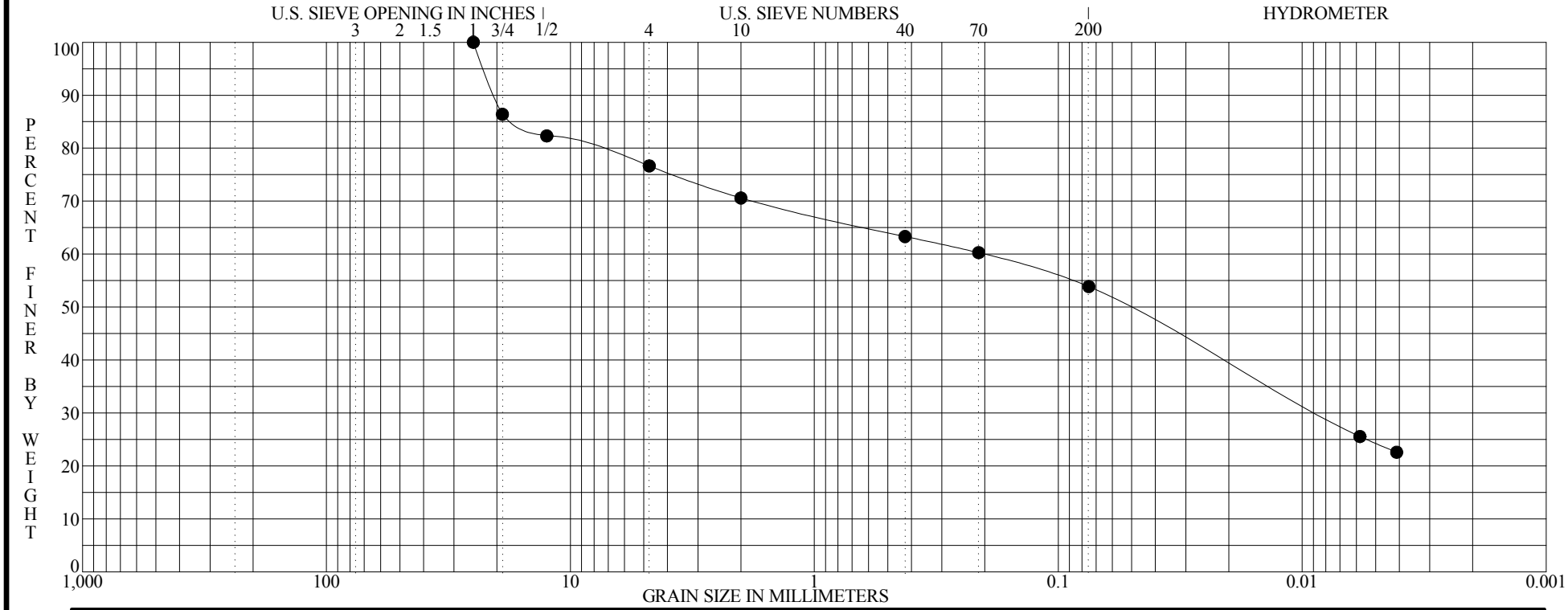

BOULDERS	COBBLES	GRAVEL		SAND			SILT OR CLAY
		coarse	fine	coarse	medium	fine	

	Specimen Identification - Depth	Classification	MC%	LL	PL	PI	Cc	Cu
●	**B-202 S-1 1.5' to 2.1'**	**Dark-gray mottled with dark-brown silty clay, some fine to coarse sand, some fine to coarse gravel.**	**17**	**39**	**19**	**20**		

	Specimen Identification - Depth	D100	D95	D60	D50	D10	%Gravel	%Sand	%Silt	%Clay
●	**B-202 S-1 1.5' to 2.1'**	**25.0000**	**22.6008**	**0.2026**	**0.0528**		**23.3**	**22.8**	**29.6**	**24.3**

ASTM D422

GRADATION CURVE

PROJECT: SR161/RIVERSIDE DRIVE IMPROVEMENTS
LOCATION: DUBLIN, OHIO
JOB NO.: 1171-13-042A
DATE: 10/14/13

GRN-REG

PLATE 30

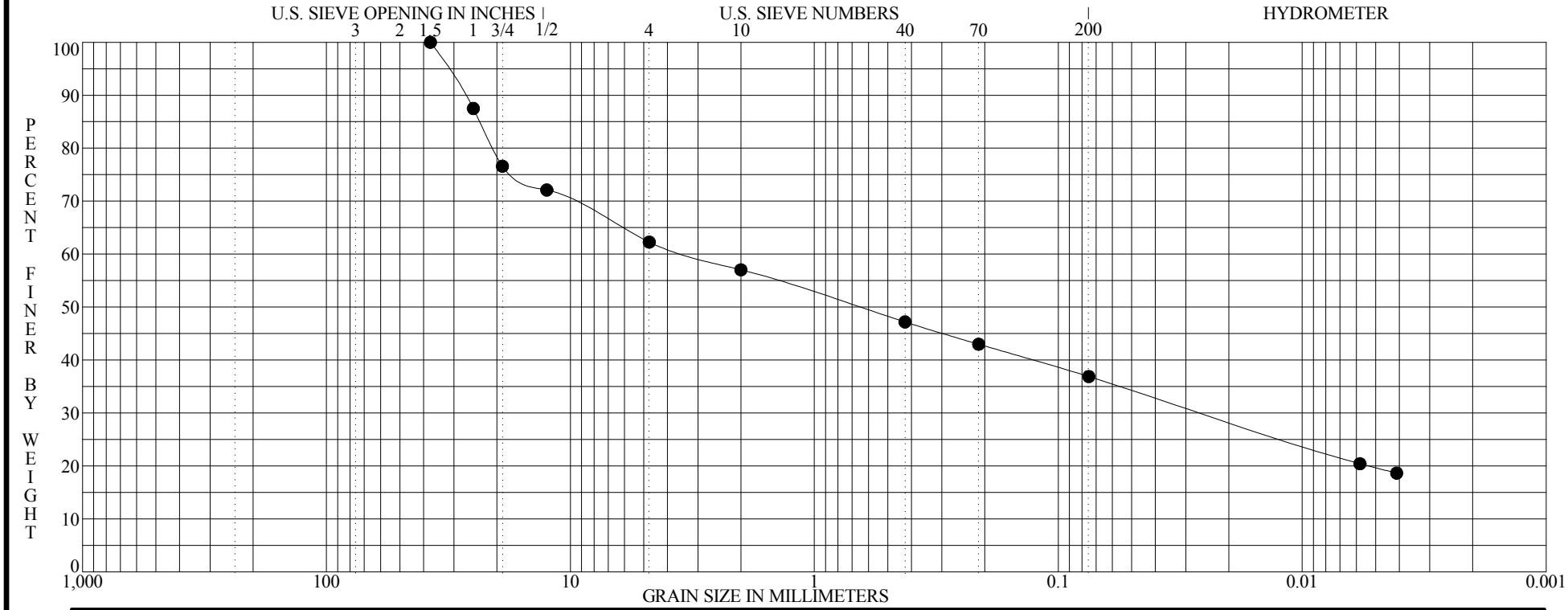

BOULDERS	COBBLES	GRAVEL		SAND			SILT OR CLAY
		coarse	fine	coarse	medium	fine	

	Specimen Identification - Depth	Classification	MC%	LL	PL	PI	Cc	Cu
●	**B-203 S-2 2.5' to 3.0'**	**Gray, brown and dark-brown fine to coarse gravel, some fine to coarse sand, "and" silty clay.**	**14**	**42**	**21**	**21**		

	Specimen Identification - Depth	D100	D95	D60	D50	D10	%Gravel	%Sand	%Silt	%Clay
●	**B-203 S-2 2.5' to 3.0'**	**37.5000**	**31.8850**	**3.2683**	**0.6614**		**37.7**	**25.4**	**17.2**	**19.7**

ASTM D422

GRADATION CURVE

PROJECT SR161/RIVERSIDE DRIVE IMPROVEMENTS
LOCATION DUBLIN, OHIO
JOB NO. 1171-13-042A **DATE** 10/14/13

GRN-REG

PLATE 31

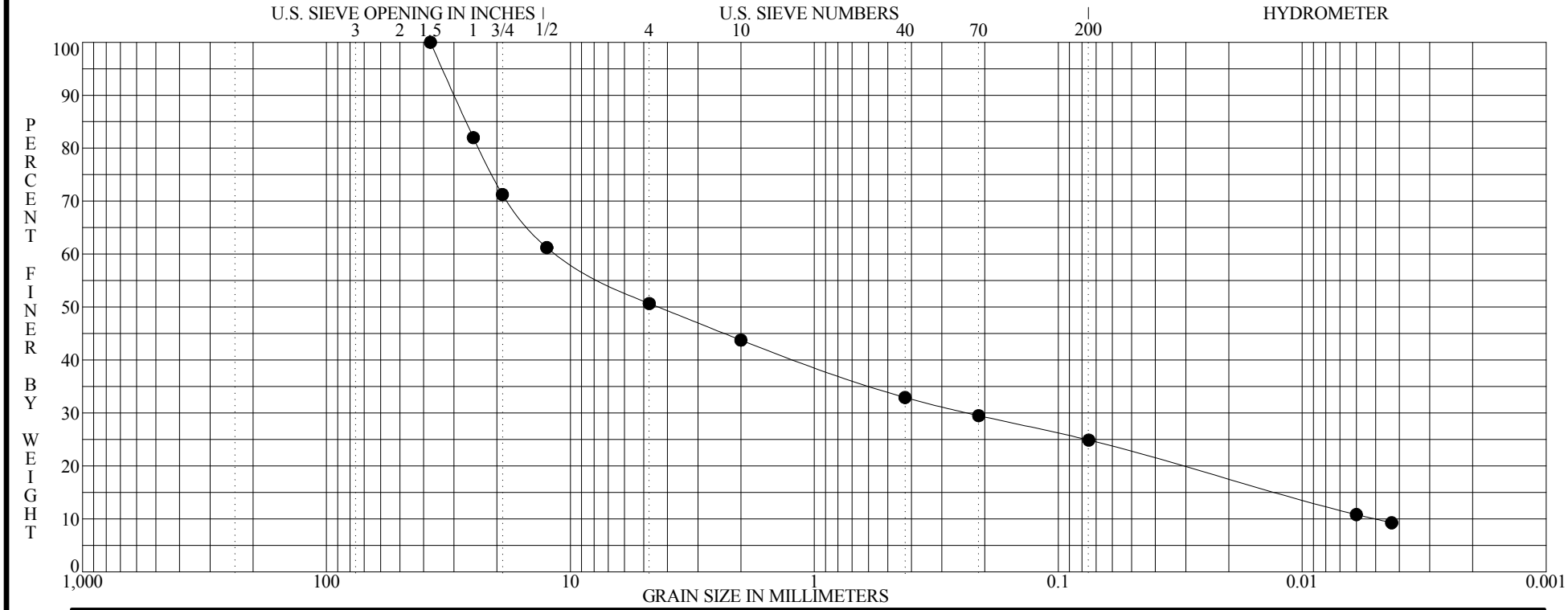

BOULDERS	COBBLES	GRAVEL		SAND			SILT OR CLAY
		coarse	fine	coarse	medium	fine	

	Specimen Identification - Depth	Classification	MC%	LL	PL	PI	Cc	Cu
●	**B-204 S-2 2.5' to 3.5'**	**Gray and brown fine to coarse gravel, some fine to coparse sand, some clayey silt.**	**8**	**28**	**18**	**10**	**0.983**	**2218.608**

	Specimen Identification - Depth	D100	D95	D60	D50	D10	%Gravel	%Sand	%Silt	%Clay
●	**B-204 S-2 2.5' to 3.5'**	**37.5000**	**33.5064**	**11.1667**	**4.3696**	**0.0050**	**49.3**	**25.8**	**14.9**	**10.0**

ASTM D422

GRADATION CURVE

PROJECT SR161/RIVERSIDE DRIVE IMPROVEMENTS
LOCATION DUBLIN, OHIO
JOB NO. 1171-13-042A **DATE** 10/14/13

GRN-REG

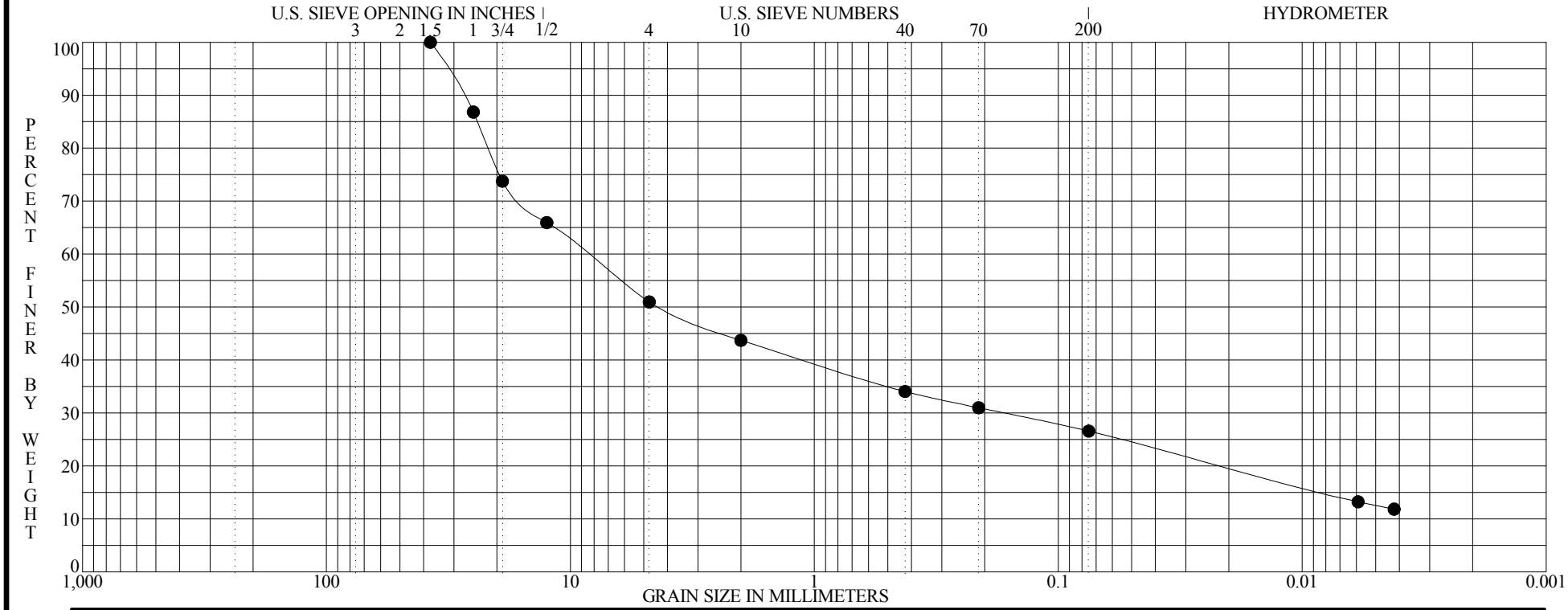

BOULDERS	COBBLES	GRAVEL		SAND			SILT OR CLAY
		coarse	fine	coarse	medium	fine	

	Specimen Identification - Depth	Classification	MC%	LL	PL	PI	Cc	Cu
●	**B-205 S-1 1.5' to 3.0'**	**Gray and dark-brown fine to coarse gravel, some fine to coarse sand, some silty clay.**	**10**	**35**	**17**	**18**		

	Specimen Identification - Depth	D100	D95	D60	D50	D10	%Gravel	%Sand	%Silt	%Clay
●	**B-205 S-1 1.5' to 3.0'**	**37.5000**	**32.1513**	**8.5129**	**4.2317**		**49.0**	**24.4**	**14.0**	**12.6**

ASTM D422

GRADATION CURVE

PROJECT SR161/RIVERSIDE DRIVE IMPROVEMENTS
LOCATION DUBLIN, OHIO
JOB NO. 1171-13-042A **DATE** 10/14/13

GRN-REG

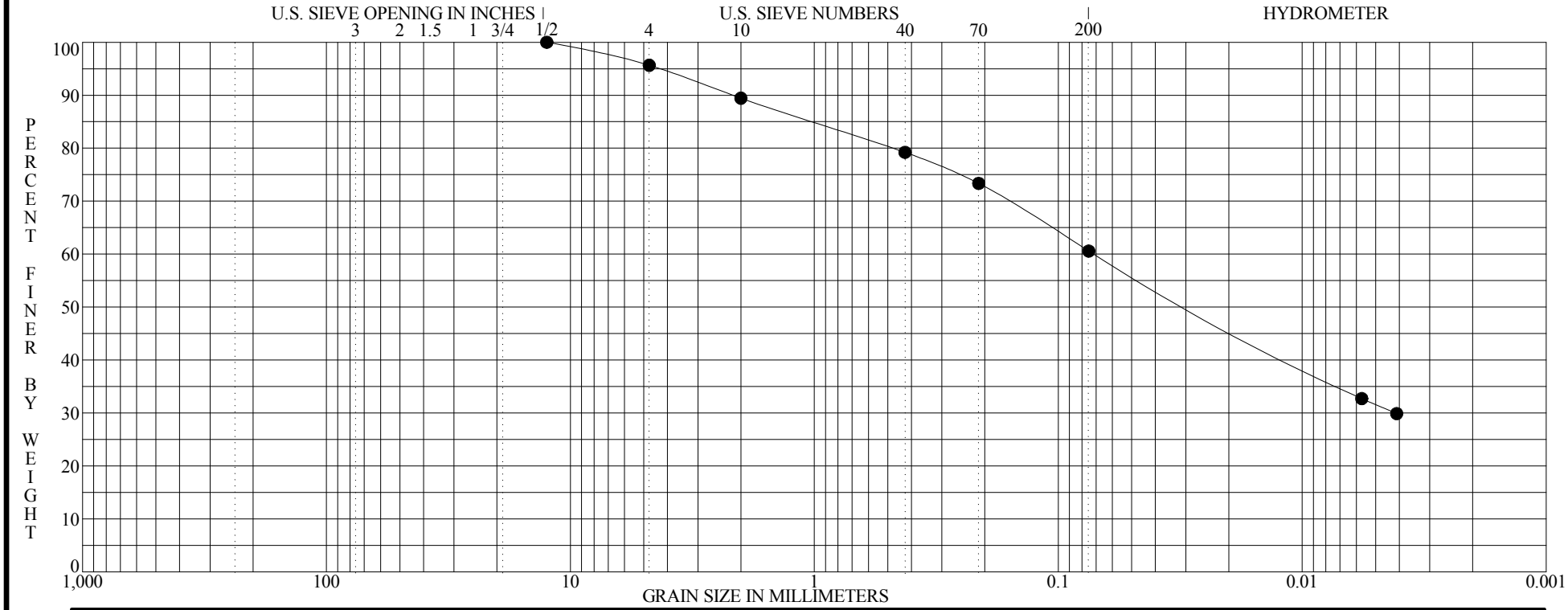

BOULDERS	COBBLES	GRAVEL		SAND			SILT OR CLAY
		coarse	fine	coarse	medium	fine	

	Specimen Identification - Depth	Classification	MC%	LL	PL	PI	Cc	Cu
●	**B-206 S-1 1.5' to 2.2'**	**Brown mottled with gray and dark-gray silty clay, some fine to coarse sand, trace fine gravel.**	**16**	**28**	**14**	**14**		

	Specimen Identification - Depth	D100	D95	D60	D50	D10	%Gravel	%Sand	%Silt	%Clay
●	**B-206 S-1 1.5' to 2.2'**	**12.5000**	**4.3347**	**0.0711**	**0.0282**		**4.3**	**35.1**	**29.0**	**31.6**

ASTM D422

GRADATION CURVE

PROJECT SR161/RIVERSIDE DRIVE IMPROVEMENTS
LOCATION DUBLIN, OHIO
JOB NO. 1171-13-042A **DATE** 10/14/13

GRN-REG

PLATE 34

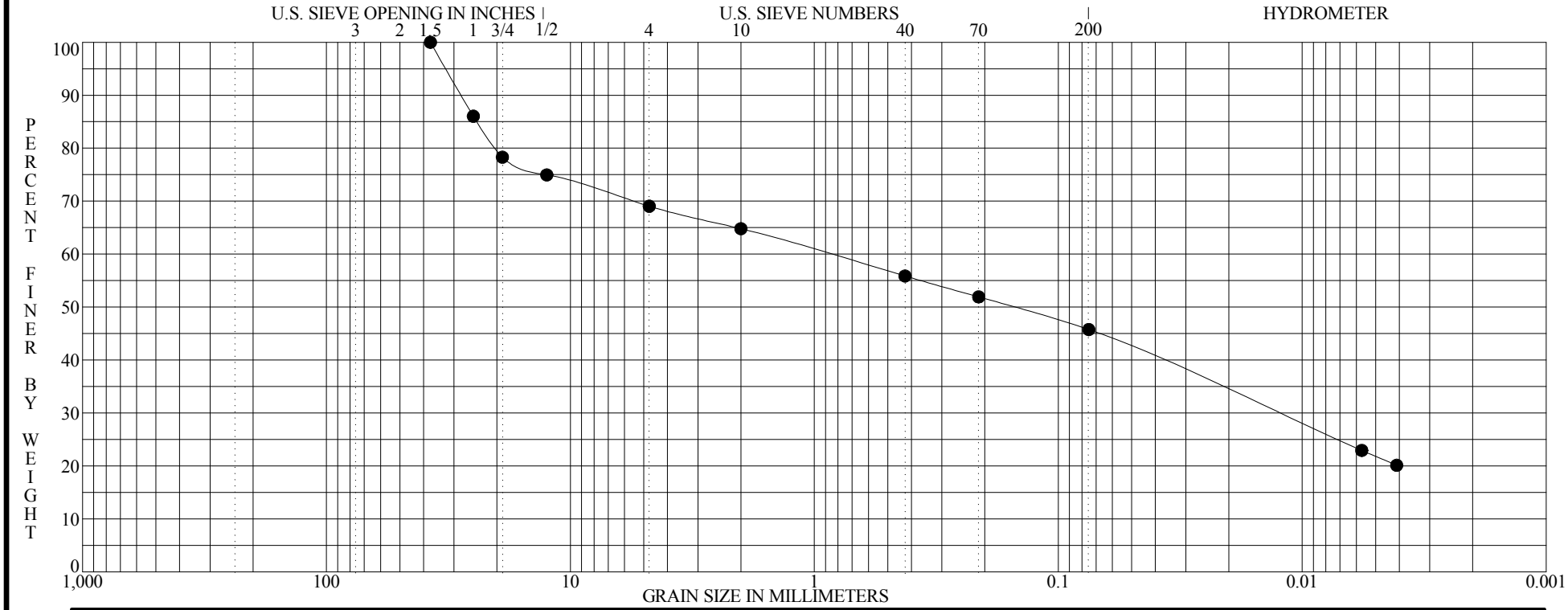

BOULDERS	COBBLES	GRAVEL		SAND			SILT OR CLAY
		coarse	fine	coarse	medium	fine	

	Specimen Identification - Depth	Classification	MC%	LL	PL	PI	Cc	Cu
●	**B-208 S-2 3.5' to 4.5'**	**Brown and gray fine to coarse gravel, some fine to coarse sand, "and" silty clay.**	**12**	**35**	**19**	**16**		

	Specimen Identification - Depth	D100	D95	D60	D50	D10	%Gravel	%Sand	%Silt	%Clay
●	**B-208 S-2 3.5' to 4.5'**	**37.5000**	**32.4315**	**0.8700**	**0.1534**		**31.0**	**23.3**	**23.9**	**21.8**

ASTM D422

GRADATION CURVE

PROJECT SR161/RIVERSIDE DRIVE IMPROVEMENTS
LOCATION DUBLIN, OHIO
JOB NO. 1171-13-042A **DATE** 10/14/13

GRN-REG

PLATE 35

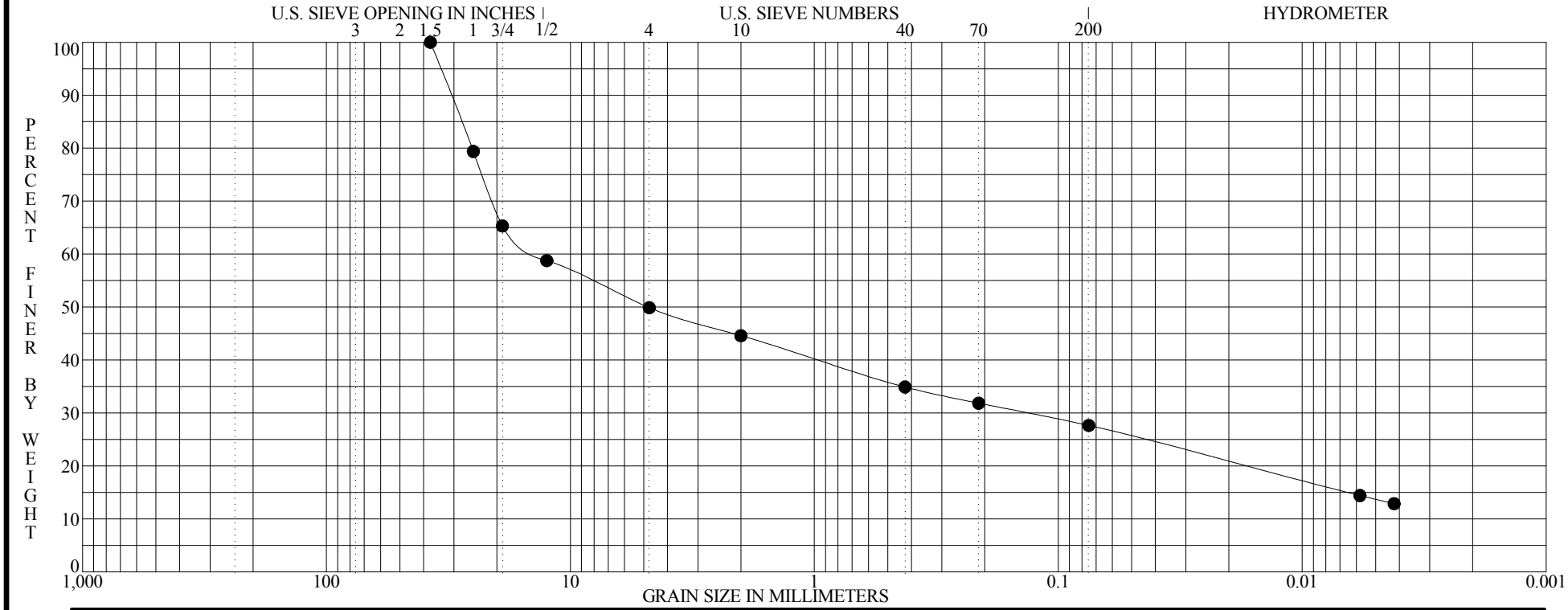

BOULDERS	COBBLES	GRAVEL		SAND			SILT OR CLAY
		coarse	fine	coarse	medium	fine	

	Specimen Identification - Depth	Classification	MC%	LL	PL	PI	Cc	Cu
●	**B-209 S-1 1.0' to 2.5'**	**Gray and dark-gray fine to coarse gravel, some fine to coarse sand, some silty clay.**	**8**	**30**	**17**	**13**		

	Specimen Identification - Depth	D100	D95	D60	D50	D10	%Gravel	%Sand	%Silt	%Clay
●	**B-209 S-1 1.0' to 2.5'**	**37.5000**	**33.9876**	**13.5219**	**4.8124**		**50.1**	**22.2**	**13.9**	**13.7**

ASTM D422

GRADATION CURVE

PROJECT SR161/RIVERSIDE DRIVE IMPROVEMENTS
LOCATION DUBLIN, OHIO
JOB NO. 1171-13-042A **DATE** 10/14/13

GRN-REG

PLATE 36

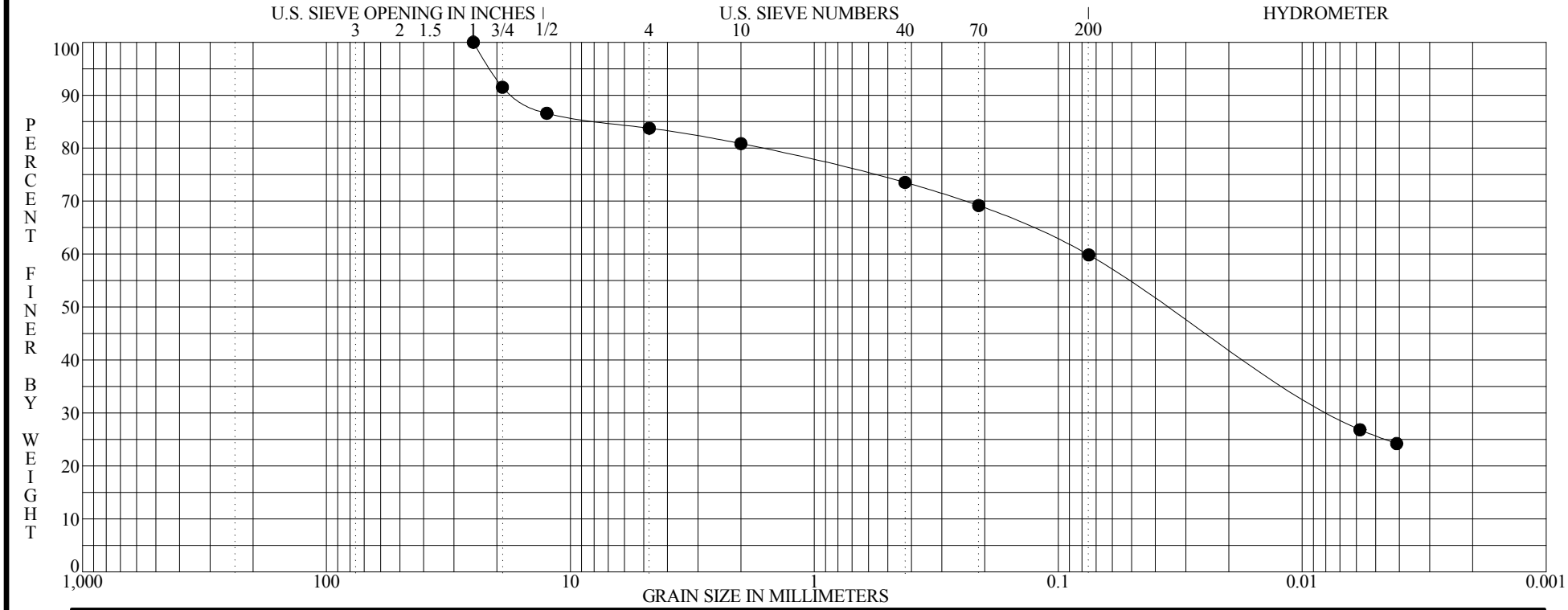

BOULDERS	COBBLES	GRAVEL		SAND			SILT OR CLAY
		coarse	fine	coarse	medium	fine	

	Specimen Identification - Depth	Classification	MC%	LL	PL	PI	Cc	Cu
●	**B-210 S-1 1.0' to 2.5'**	**Brown mottled with dark-gray silty clay, some fine to coarse sand, little fine to coarse gravel.**	**13**	**31**	**18**	**13**		

	Specimen Identification - Depth	D100	D95	D60	D50	D10	%Gravel	%Sand	%Silt	%Clay
●	**B-210 S-1 1.0' to 2.5'**	**25.0000**	**21.2689**	**0.0763**	**0.0350**		**16.2**	**23.9**	**34.1**	**25.7**

ASTM D422

GRADATION CURVE

PROJECT SR161/RIVERSIDE DRIVE IMPROVEMENTS
LOCATION DUBLIN, OHIO
JOB NO. 1171-13-042A **DATE** 10/14/13

GRN-REG

PLATE 37

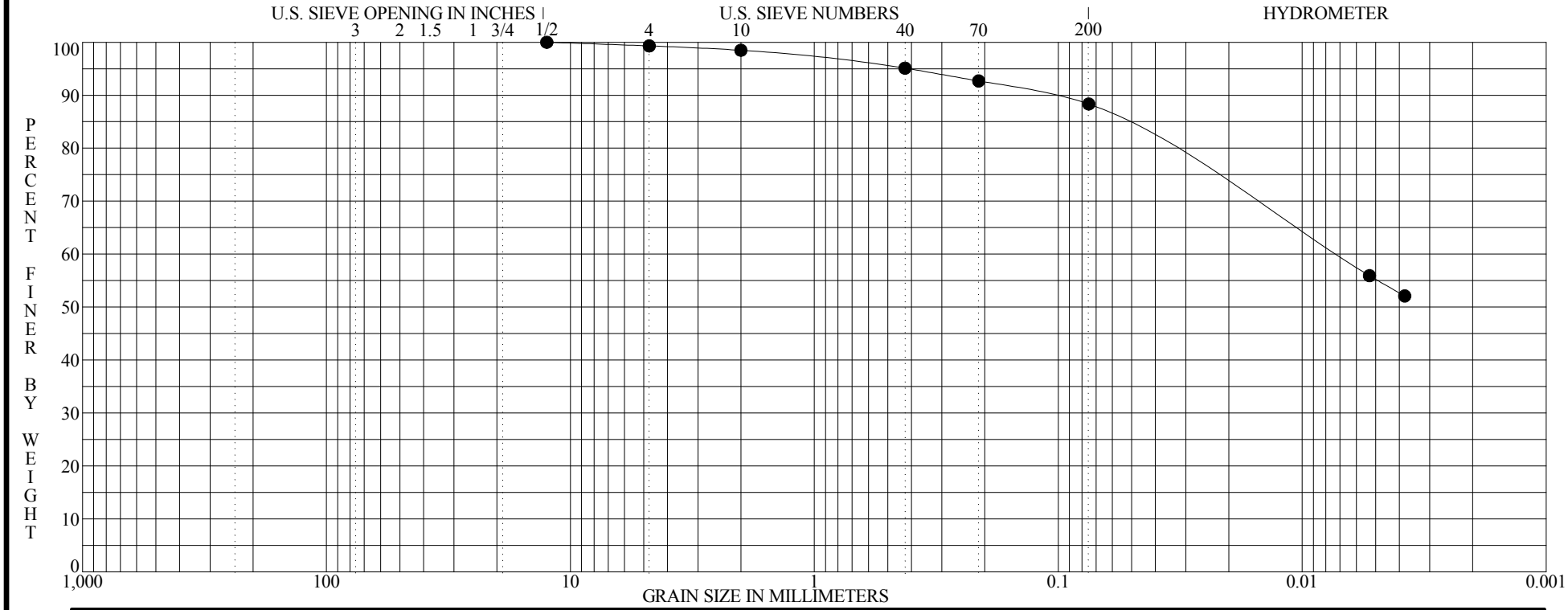

BOULDERS	COBBLES	GRAVEL		SAND			SILT OR CLAY
		coarse	fine	coarse	medium	fine	

	Specimen Identification - Depth	Classification	MC%	LL	PL	PI	Cc	Cu
●	**B-212 S-1 1.0' to 2.5'**	**Brown silty clay, little fine to coarse sand, trace fine gravel.**	**25**	**67**	**22**	**45**		

	Specimen Identification - Depth	D100	D95	D60	D50	D10	%Gravel	%Sand	%Silt	%Clay
●	**B-212 S-1 1.0' to 2.5'**	**12.5000**	**0.4116**	**0.0074**			**0.7**	**11.0**	**33.1**	**55.3**

ASTM D422

GRADATION CURVE

PROJECT SR161/RIVERSIDE DRIVE IMPROVEMENTS
LOCATION DUBLIN, OHIO
JOB NO. 1171-13-042A **DATE** 10/14/13

GRN-REG

PLATE 38

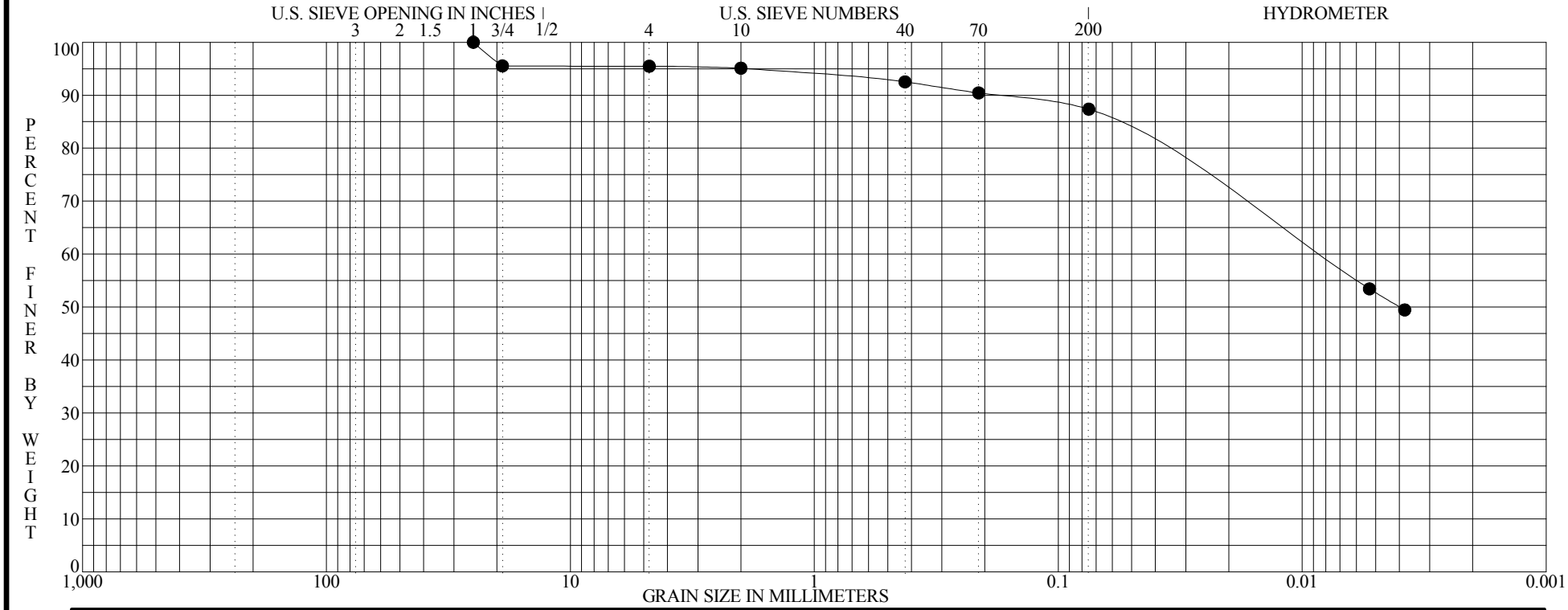

BOULDERS	COBBLES	GRAVEL		SAND			SILT OR CLAY
		coarse	fine	coarse	medium	fine	

	Specimen Identification - Depth	Classification	MC%	LL	PL	PI	Cc	Cu
●	**B-213 S-1 1.0' to 2.5'**	**Dark-gray mottled with brown silty clay, trace fine to coarse sand, trace fine gravel.**	**22**	**56**	**24**	**32**		

	Specimen Identification - Depth	D100	D95	D60	D50	D10	%Gravel	%Sand	%Silt	%Clay
●	**B-213 S-1 1.0' to 2.5'**	**25.0000**	**1.8669**	**0.0089**	**0.0040**		**4.5**	**8.1**	**34.6**	**52.7**

ASTM D422

GRADATION CURVE

PROJECT SR161/RIVERSIDE DRIVE IMPROVEMENTS
LOCATION DUBLIN, OHIO
JOB NO. 1171-13-042A **DATE** 10/14/13

GRN-REG

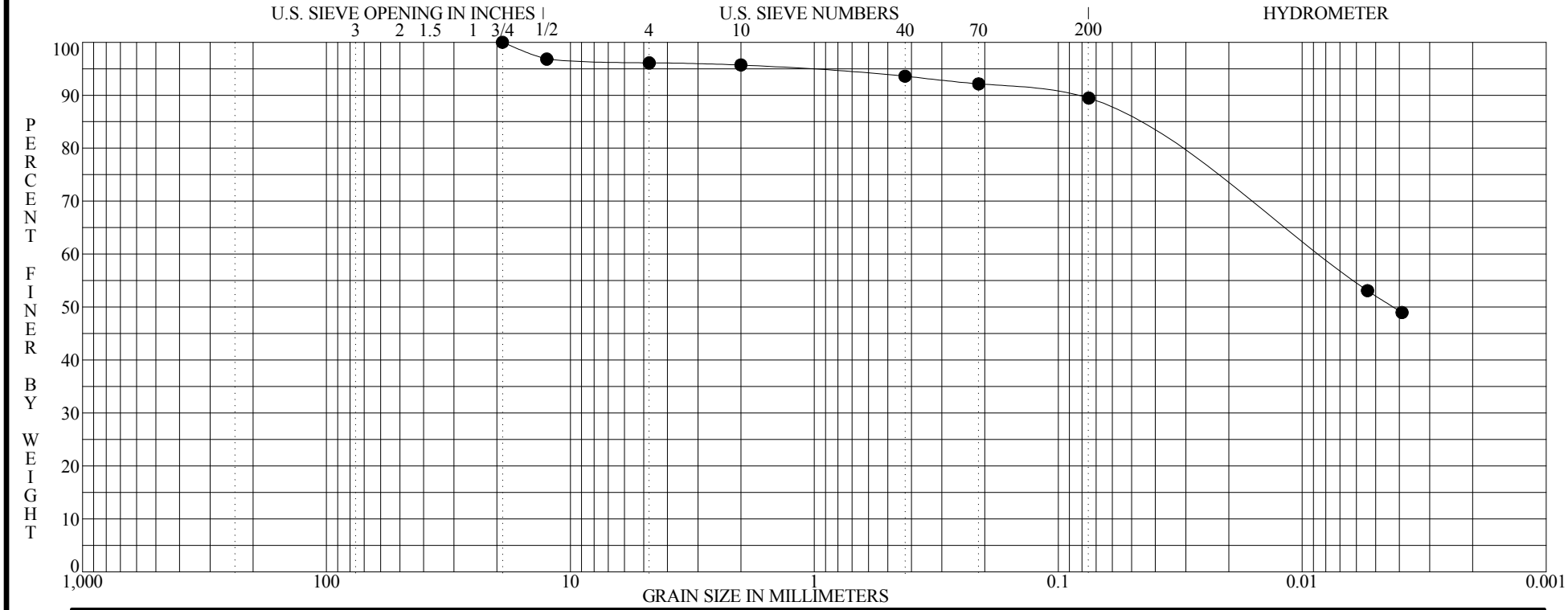

BOULDERS	COBBLES	GRAVEL		SAND			SILT OR CLAY
		coarse	fine	coarse	medium	fine	

	Specimen Identification - Depth	Classification	MC%	LL	PL	PI	Cc	Cu
●	**B-214 S-1 1.0' to 2.4'**	**Dark-brown mottled with dark-gray silty clay, trace fine to coarse sand, trace fine gravel.**	**21**	**56**	**24**	**32**		

	Specimen Identification - Depth	D100	D95	D60	D50	D10	%Gravel	%Sand	%Silt	%Clay
●	**B-214 S-1 1.0' to 2.4'**	**19.0000**	**1.1885**	**0.0089**	**0.0042**		**3.9**	**6.6**	**37.3**	**52.1**

ASTM D422

GRADATION CURVE

PROJECT: SR161/RIVERSIDE DRIVE IMPROVEMENTS
LOCATION: DUBLIN, OHIO
JOB NO.: 1171-13-042A
DATE: 10/14/13

GRN-REG

PLATE 40

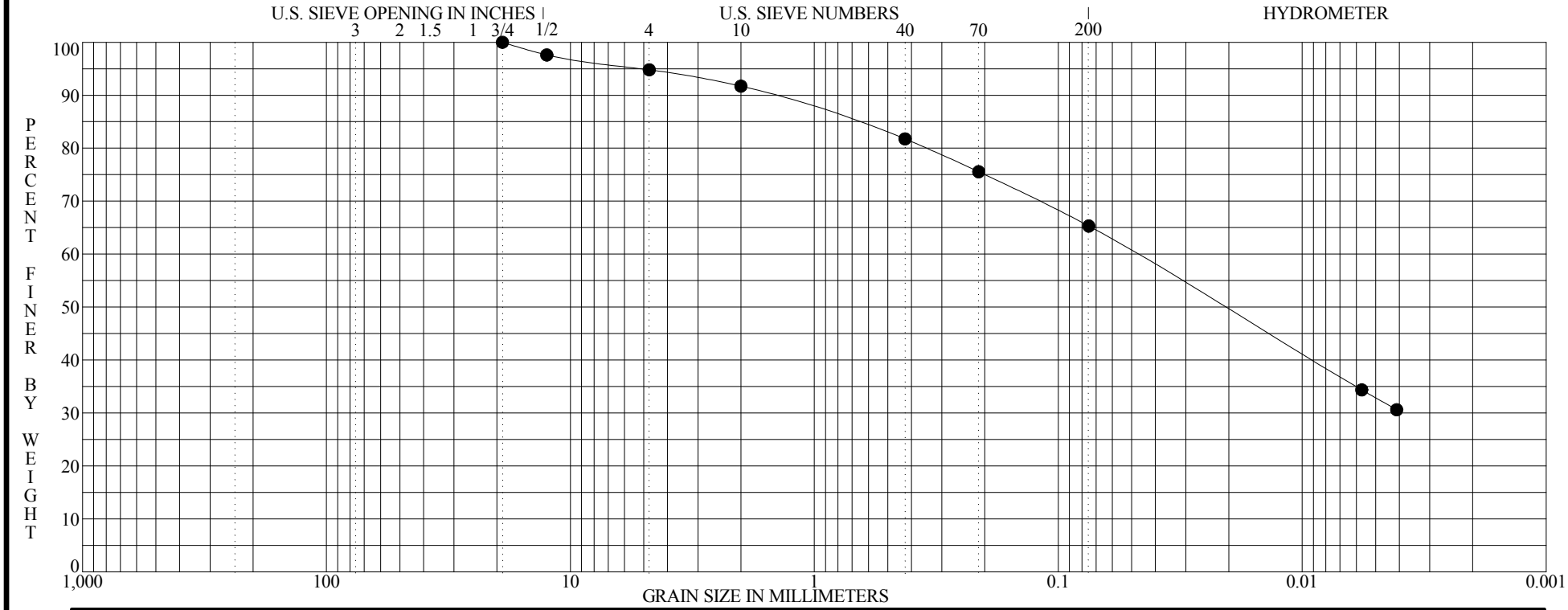

BOULDERS	COBBLES	GRAVEL		SAND			SILT OR CLAY
		coarse	fine	coarse	medium	fine	

	Specimen Identification - Depth	Classification	MC%	LL	PL	PI	Cc	Cu
●	**B-215 S-1 1.0' to 2.0'**	**Brown mottled with gray silty clay, some fine to coarse sand, trace fine gravel.**	**20**	**31**	**18**	**13**		

	Specimen Identification - Depth	D100	D95	D60	D50	D10	%Gravel	%Sand	%Silt	%Clay
●	**B-215 S-1 1.0' to 2.0'**	**19.0000**	**5.0911**	**0.0482**	**0.0210**		**5.2**	**29.5**	**32.4**	**32.9**

ASTM D422

GRADATION CURVE

PROJECT SR161/RIVERSIDE DRIVE IMPROVEMENTS
LOCATION DUBLIN, OHIO
JOB NO. 1171-13-042A **DATE** 10/14/13

GRN-REG

PLATE 41

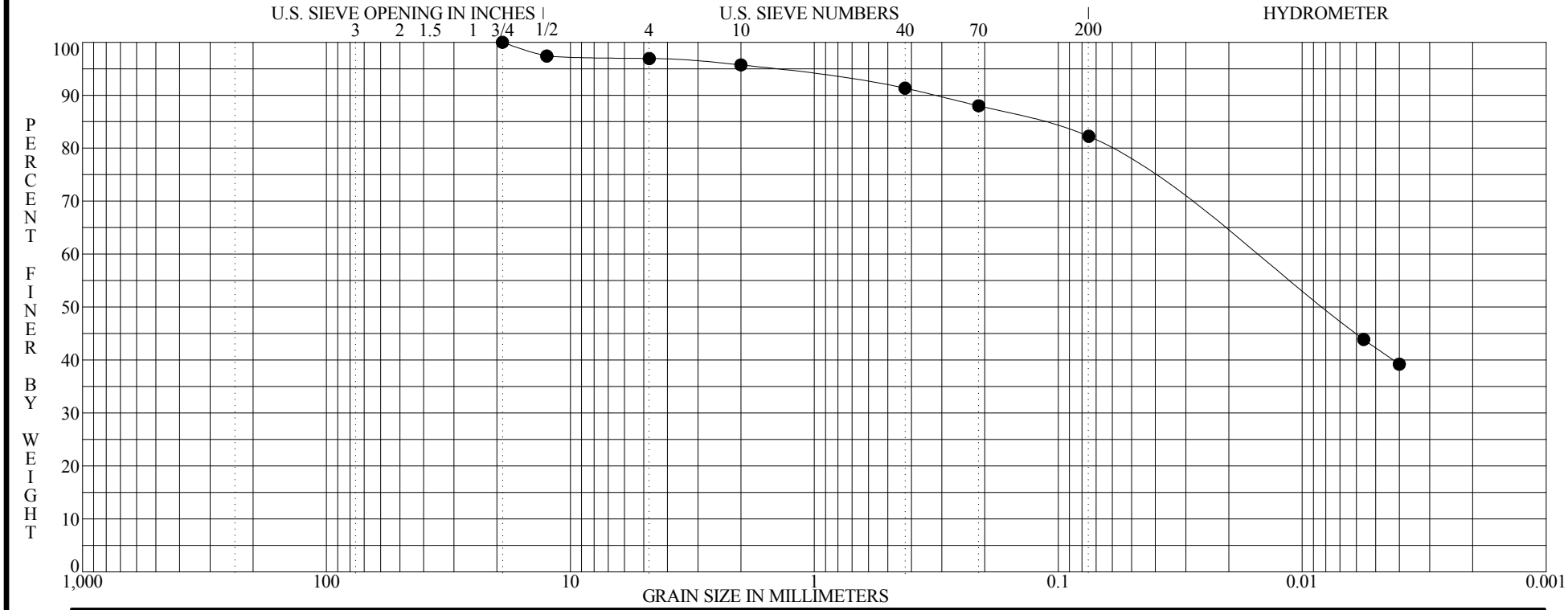

BOULDERS	COBBLES	GRAVEL		SAND			SILT OR CLAY
		coarse	fine	coarse	medium	fine	

	Specimen Identification - Depth	Classification	MC%	LL	PL	PI	Cc	Cu
●	**B-216 S-1 1.0' to 2.0'**	**Dark-gray silty clay, little fine to coarse sand, trace fine gravel.**	**19**	**50**	**24**	**26**		

	Specimen Identification - Depth	D100	D95	D60	D50	D10	%Gravel	%Sand	%Silt	%Clay
●	**B-216 S-1 1.0' to 2.0'**	**19.0000**	**1.5488**	**0.0166**	**0.0085**		**3.1**	**14.7**	**39.9**	**42.3**

ASTM D422

GRADATION CURVE

PROJECT SR161/RIVERSIDE DRIVE IMPROVEMENTS
LOCATION DUBLIN, OHIO
JOB NO. 1171-13-042A **DATE** 10/14/13

GRN-REG

PLATE 42

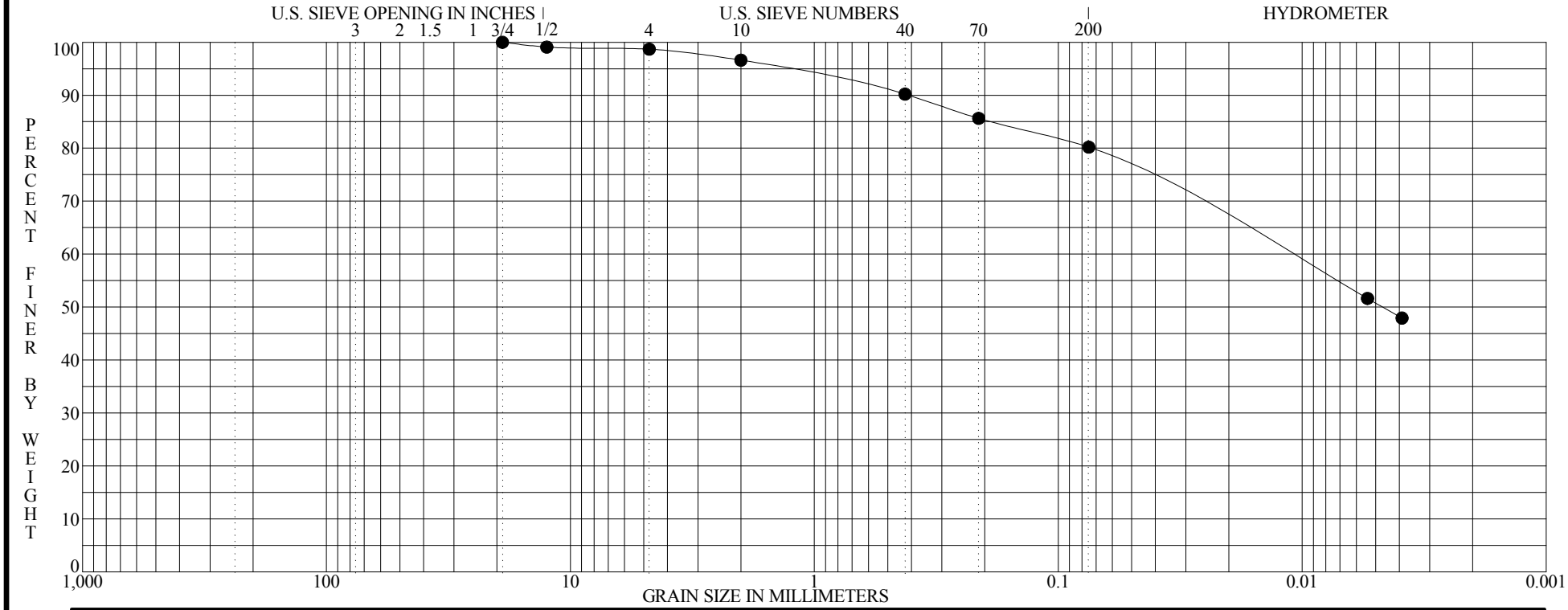

BOULDERS	COBBLES	GRAVEL		SAND			SILT OR CLAY
		coarse	fine	coarse	medium	fine	

	Specimen Identification - Depth	Classification	MC%	LL	PL	PI	Cc	Cu
●	**B-217 S-1A 2.5' to 3.0'**	**Brown silty clay, little fine to coarse sand, trace fine gravel.**	**28**	**54**	**23**	**31**		

	Specimen Identification - Depth	D100	D95	D60	D50	D10	%Gravel	%Sand	%Silt	%Clay
●	**B-217 S-1A 2.5' to 3.0'**	**19.0000**	**1.3527**	**0.0117**	**0.0047**		**1.3**	**18.5**	**29.4**	**50.8**

ASTM D422

GRADATION CURVE

PROJECT SR161/RIVERSIDE DRIVE IMPROVEMENTS
LOCATION DUBLIN, OHIO
JOB NO. 1171-13-042A **DATE** 10/14/13

GRN-REG

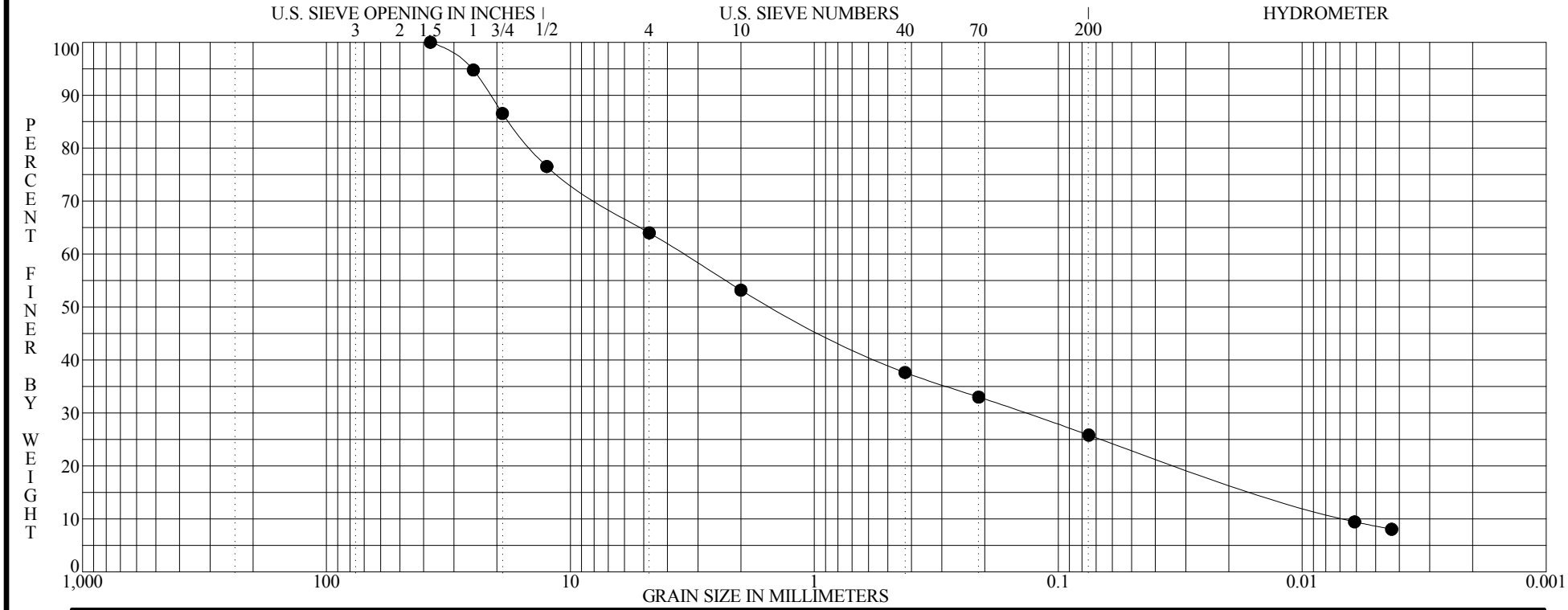

BOULDERS	COBBLES	GRAVEL		SAND			SILT OR CLAY
		coarse	fine	coarse	medium	fine	

	Specimen Identification - Depth	Classification	MC%	LL	PL	PI	Cc	Cu
●	**B-218 S-1 1.5' to 3.0'**	**Gray and dark-brown fine to coarse sand, "and" fine to coarse gravel, little silt, trace clay.**	**9**	**21**	**17**	**4**	**0.822**	**518.567**

	Specimen Identification - Depth	D100	D95	D60	D50	D10	%Gravel	%Sand	%Silt	%Clay
●	**B-218 S-1 1.5' to 3.0'**	**37.5000**	**25.4593**	**3.4475**	**1.4544**	**0.0066**	**36.0**	**38.2**	**17.2**	**8.6**

ASTM D422

GRADATION CURVE

PROJECT SR161/RIVERSIDE DRIVE IMPROVEMENTS
LOCATION DUBLIN, OHIO
JOB NO. 1171-13-042A **DATE** 10/14/13

GRN-REG

PLATE 44

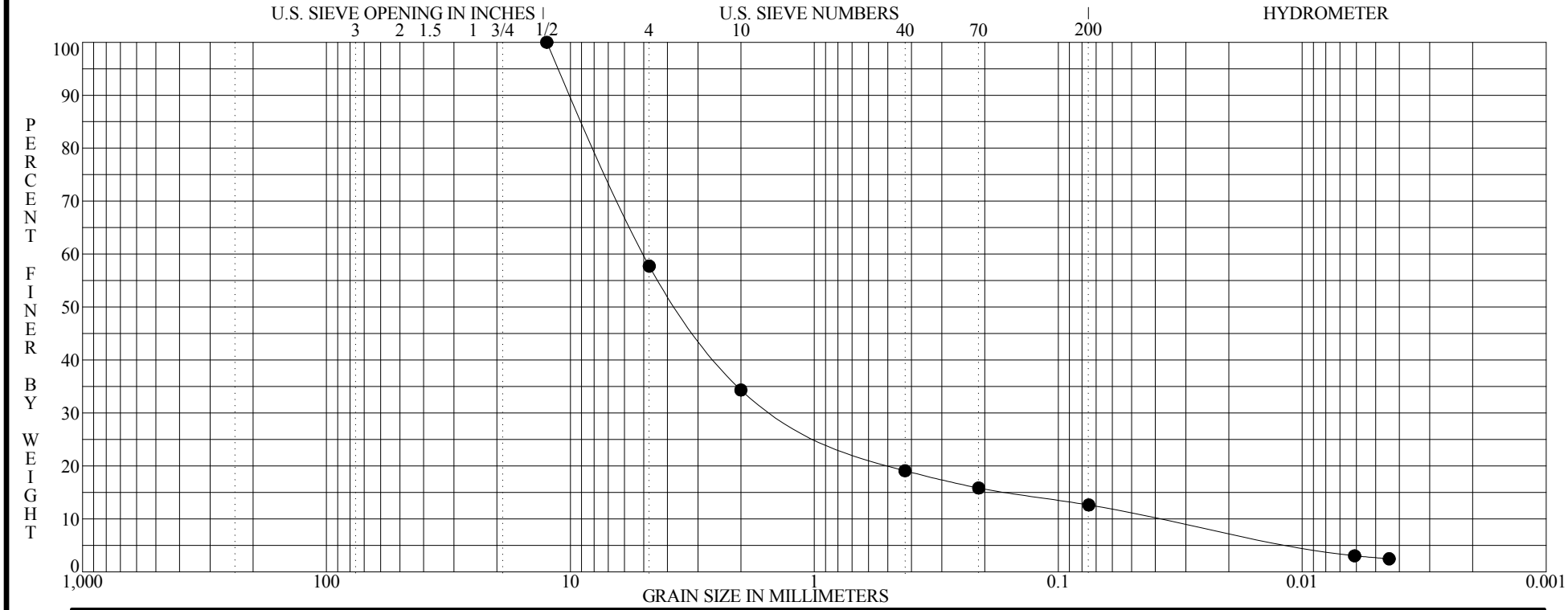

BOULDERS	COBBLES	GRAVEL		SAND			SILT OR CLAY
		coarse	fine	coarse	medium	fine	

	Specimen Identification - Depth	Classification	MC%	LL	PL	PI	Cc	Cu
●	**B-220 S-2 3.5' to 5.0'**	**FILL: Gray fine to coarse sand, "and" fine to coarse gravel, trace silt, trace clay.**	**5**	**NP**	**NP**	**NP**	**8.786**	**132.560**

	Specimen Identification - Depth	D100	D95	D60	D50	D10	%Gravel	%Sand	%Silt	%Clay
●	**B-220 S-2 3.5' to 5.0'**	**12.5000**	**11.1480**	**5.0027**	**3.5688**	**0.0377**	**42.3**	**45.1**	**9.9**	**2.7**

ASTM D422

GRADATION CURVE

PROJECT SR161/RIVERSIDE DRIVE IMPROVEMENTS
LOCATION DUBLIN, OHIO
JOB NO. 1171-13-042A **DATE** 10/14/13

GRN-REG

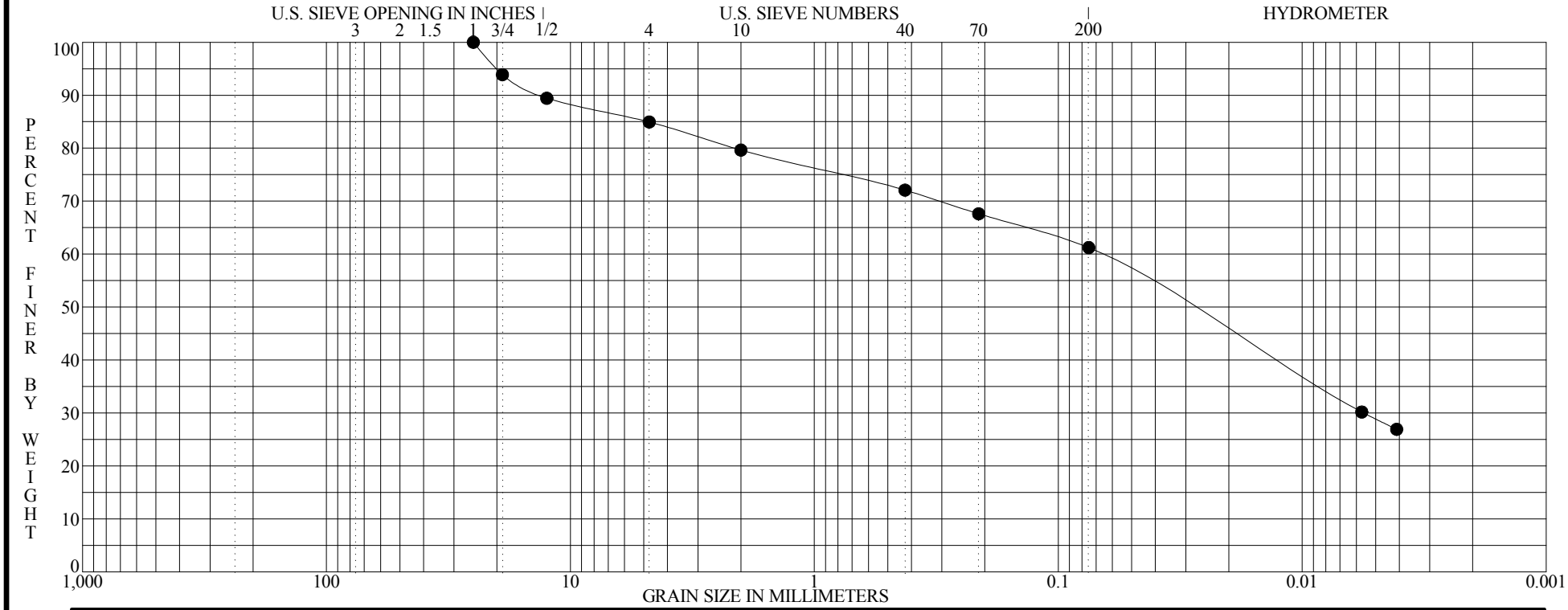

BOULDERS	COBBLES	GRAVEL		SAND			SILT OR CLAY
		coarse	fine	coarse	medium	fine	

	Specimen Identification - Depth	Classification	MC%	LL	PL	PI	Cc	Cu
●	**B-221 S-1 1.0' to 2.0'**	**FILL: Dark-brown and gray silty clay, little fine to coarse sand, little fine to coarse gravel.**	**17**	**37**	**18**	**19**		

	Specimen Identification - Depth	D100	D95	D60	D50	D10	%Gravel	%Sand	%Silt	%Clay
●	**B-221 S-1 1.0' to 2.0'**	**25.0000**	**19.9809**	**0.0677**	**0.0295**		**15.1**	**23.7**	**32.3**	**28.9**

ASTM D422

GRADATION CURVE

PROJECT: SR161/RIVERSIDE DRIVE IMPROVEMENTS
LOCATION: DUBLIN, OHIO
JOB NO.: 1171-13-042A
DATE: 10/14/13

GRN-REG

PLATE 46

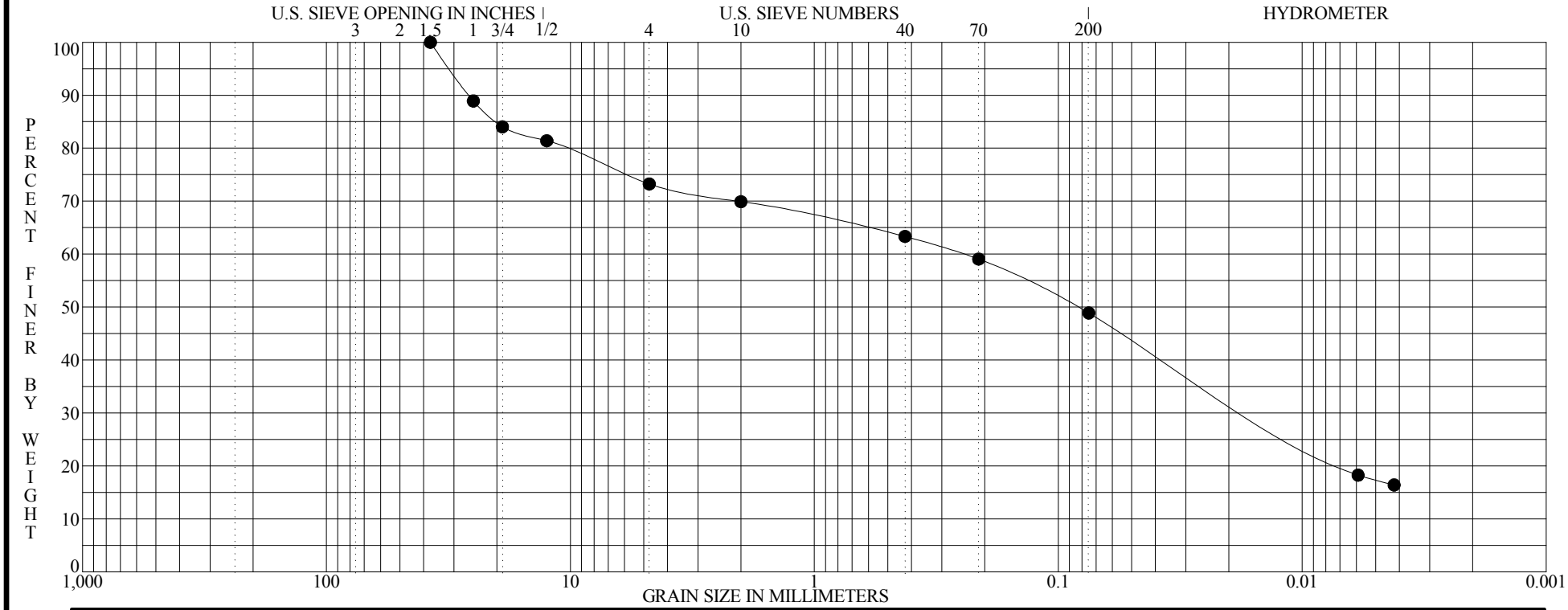

BOULDERS	COBBLES	GRAVEL		SAND			SILT OR CLAY
		coarse	fine	coarse	medium	fine	

	Specimen Identification - Depth	Classification	MC%	LL	PL	PI	Cc	Cu
●	**B-222 S-2 3.5' to 5.0'**	**Brown fine to coarse gravel, some fine to coasre sand, "and" clayey silt.**	**21**	**32**	**22**	**10**		

	Specimen Identification - Depth	D100	D95	D60	D50	D10	%Gravel	%Sand	%Silt	%Clay
●	**B-222 S-2 3.5' to 5.0'**	**37.5000**	**31.2332**	**0.2469**	**0.0840**		**26.8**	**24.4**	**31.5**	**17.4**

ASTM D422

GRADATION CURVE

PROJECT SR161/RIVERSIDE DRIVE IMPROVEMENTS
LOCATION DUBLIN, OHIO
JOB NO. 1171-13-042A **DATE** 10/14/13

GRN-REG

UNCONFINED COMPRESSION TEST

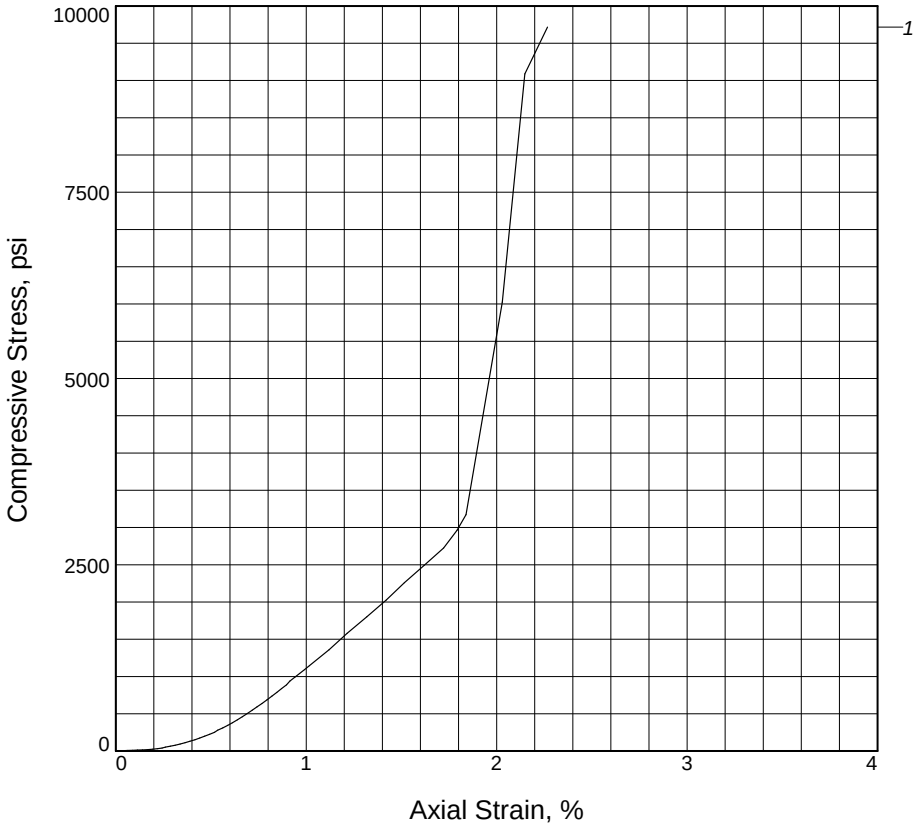

Sample No.	1			
Unconfined strength, psi	9717.12			
Undrained shear strength, psi	4858.56			
Failure strain, %	2.3			
Strain rate, in./min.	1.32			
Water content, %	1.0			
Wet density, pcf	156.0			
Dry density, pcf	154.4			
Saturation, %	29.9			
Void ratio	0.0917			
Specimen diameter, in.	1.99			
Specimen height, in.	4.20			
Height/diameter ratio	2.12			

Description: LIMESTONE, gray, hard

LL =	**PL =**	**PI =**	**GS=** 2.7	**Type:** Rock Core

Project No.: 1171-13-042A

Date Sampled: 9/19/2013

Remarks:

Client:

Project: SR 161 / Riverside Drive Improvements Dublin, Ohio

Location: B-222

Sample Number: S-6 **Depth:** 9.6' to 10.0'

UNCONFINED COMPRESSION TEST
S&ME, Inc.
Dublin, Ohio

Tested By: PJM/CBP **Checked By:** JJ

UNCONFINED COMPRESSION TEST

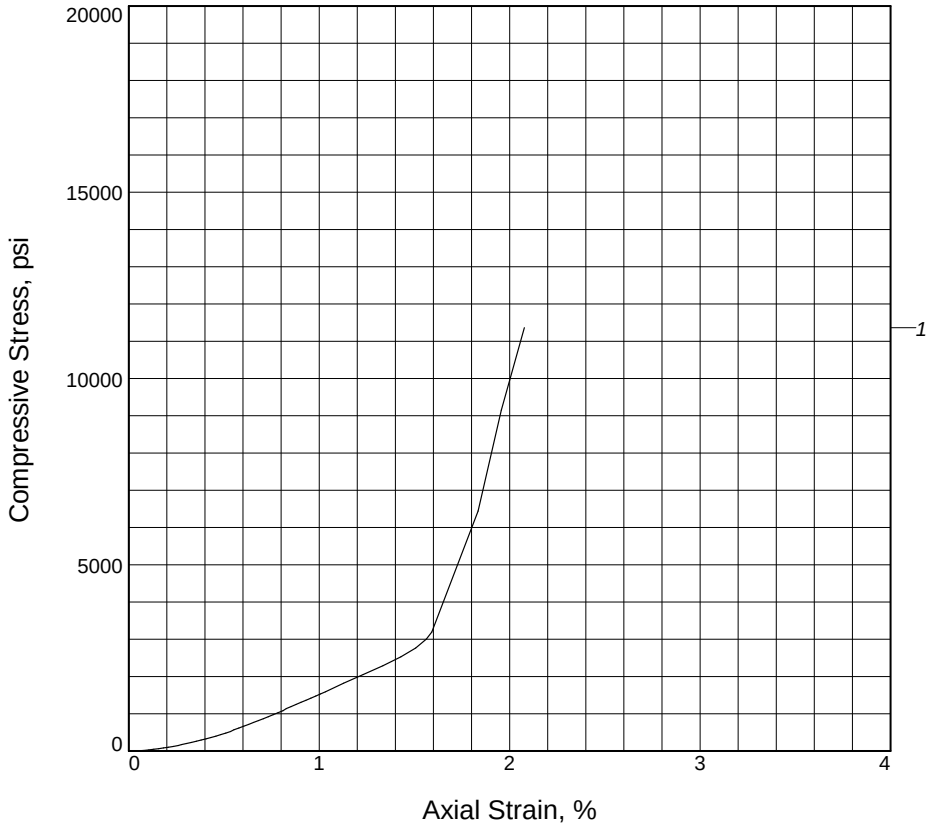

Sample No.	1			
Unconfined strength, psi	11364.81			
Undrained shear strength, psi	5682.41			
Failure strain, %	2.1			
Strain rate, in./min.	2.76			
Water content, %	0.5			
Wet density, pcf	164.2			
Dry density, pcf	163.4			
Saturation, %	42.5			
Void ratio	0.0316			
Specimen diameter, in.	1.98			
Specimen height, in.	4.12			
Height/diameter ratio	2.07			

Description: LIMESTONE, gray-brown, hard

LL =	**PL =**	**PI =**	**GS=** 2.7	**Type:** Rock Core

Project No.: 1171-13-042A

Date Sampled: 9/19/2013

Remarks:

Client:

Project: SR 161 / Riverside Drive Improvements Dublin, Ohio

Location: B-222

Sample Number: S-7 **Depth:** 15.6' to 16.1'

UNCONFINED COMPRESSION TEST
S&ME, Inc.
Dublin, Ohio

Tested By: PJM/CBP **Checked By:** JJ

UNCONFINED COMPRESSION TEST

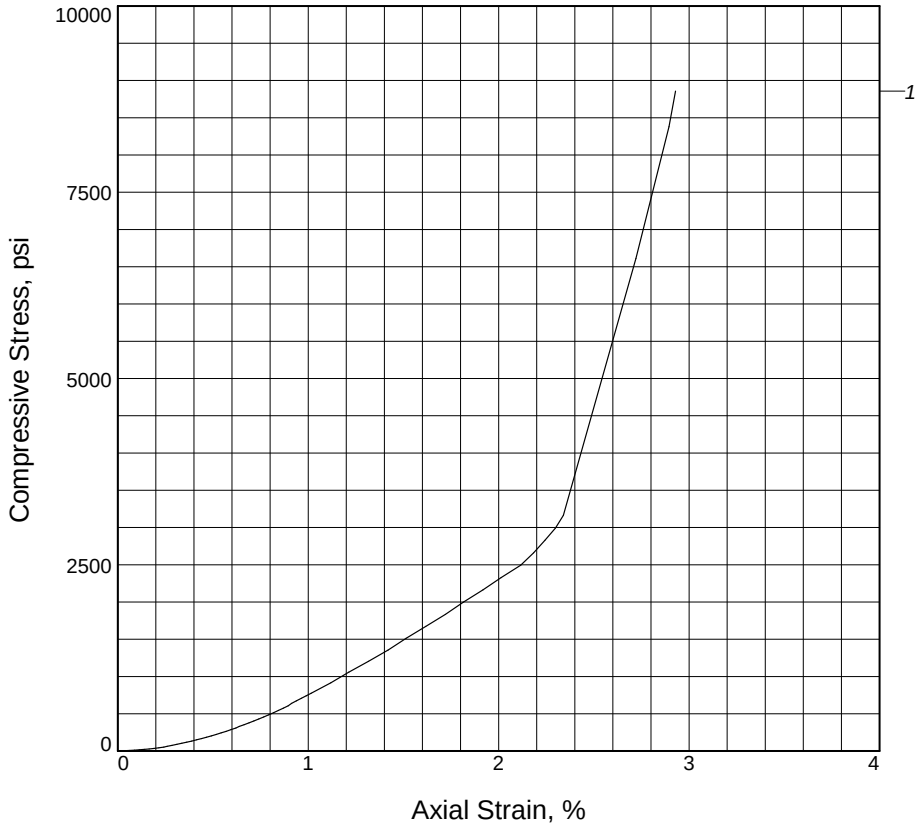

Sample No.	1			
Unconfined strength, psi	8858.41			
Undrained shear strength, psi	4429.20			
Failure strain, %	2.9			
Strain rate, in./min.	4.86			
Water content, %	0.4			
Wet density, pcf	161.8			
Dry density, pcf	161.2			
Saturation, %	24.1			
Void ratio	0.0459			
Specimen diameter, in.	1.97			
Specimen height, in.	2.88			
Height/diameter ratio	1.46			

Description: LIMESTONE, gray-brown, hard

LL =	**PL =**	**PI =**	**GS=** 2.7	**Type:** Rock Core

Project No.: 1171-13-042A

Date Sampled: 9/19/2013

Remarks:
The length-to-diameter ratio (L/D) was less than 2.0 as required by ASTM D7012. Therefore, a strength correction factor of 0.95 should be applied, which results in Qu = 8415.5 psi.

Client:

Project: SR 161 / Riverside Drive Improvements Dublin, Ohio

Location: B-223
Sample Number: S-5 **Depth:** 12.3' to 12.6'

UNCONFINED COMPRESSION TEST
S&ME, Inc.
Dublin, Ohio

Tested By: PJM/CBP **Checked By:** JJ

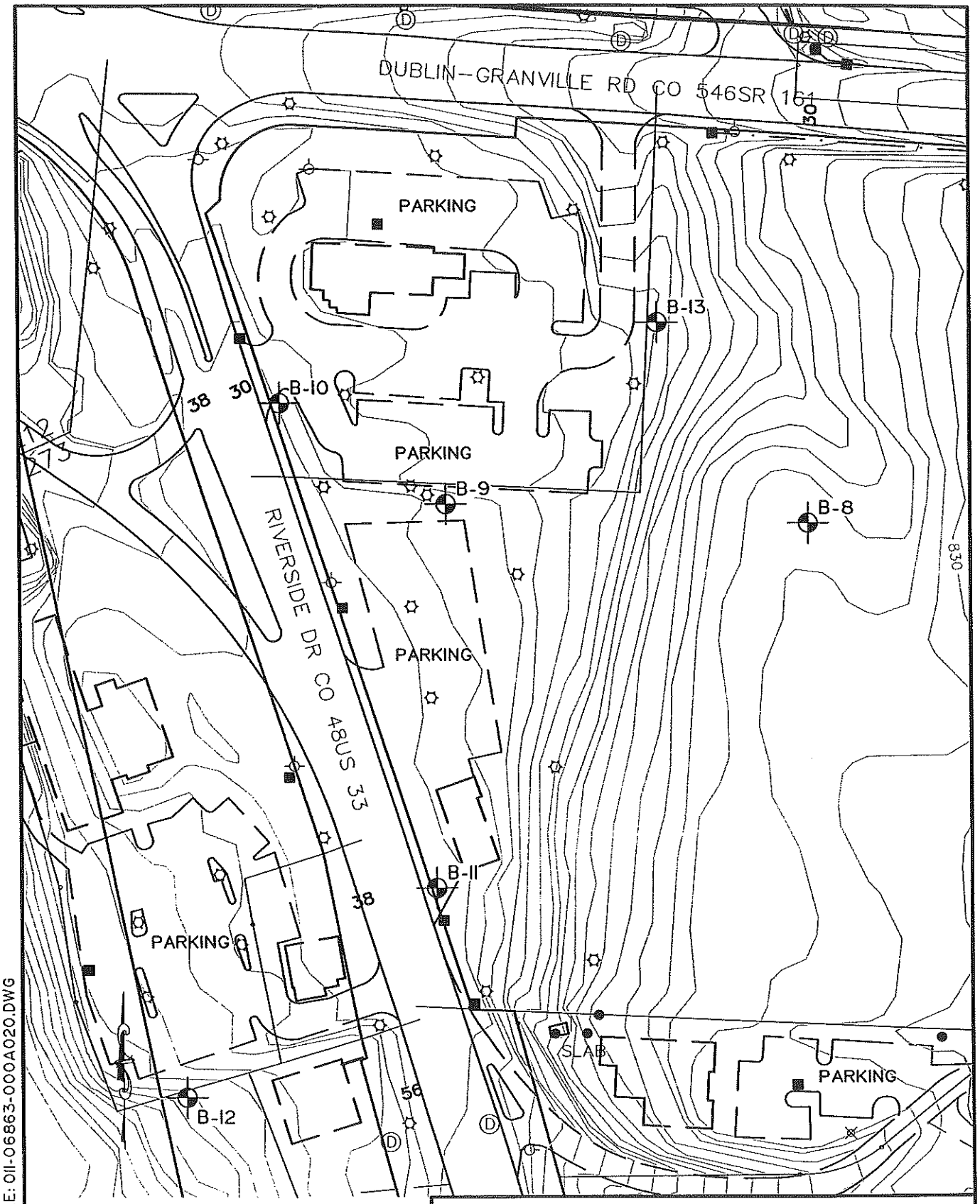

BBC&M DRAWING FILE: 01I-06863-000A020.DWG

LEGEND

B-1 BORING NUMBER AND LOCATION

PLAN OF BORINGS

WENDYS/RIVERSIDE DRIVE IMPROVEMENTS
STORMWATER IMPROVEMENT PROJECTS
DUBLIN, OHIO

Project: 01-06863-000	Drawn By: B.L.R.
Drawing Date: 3/30/00	Approved By: M.G.R.
Revision Date:	Scale: 1" = 100'

BBC&M

Columbus (614) 793-2226
Cleveland (440) 585-9995
Cincinnati (513) 771-8471

BBC&M ENGINEERING, INC.

LOG OF BORING NO. B-10
DUBLIN STORM WATER IMPROVEMENTS
WENDY'S / RIVERSIDE DRIVE IMPROVEMENTS

LOCATION: See Plate 2D
ELEVATION: 794.2
DATE: 2/23/00
DRILLING METHOD: 4-1/2" O.D. Continuous-flight Auger
COMPLETION DEPTH: 10.0'
SAMPLER(S): 2" O.D. Split-barrel Sampler; NX Rock Core Barrel

DEPTH, FEET	SAMPLE NUMBER	SAMPLE	SAMPLE EFFORT	DESCRIPTION	NATURAL CONSISTENCY INDEX / NATURAL MOISTURE CONTENT / PLASTIC LIMIT / LIQUID LIMIT (10 20 30 40)	TEST RESULTS
0				TOPSOIL - 4 INCHES		
	1		3/11/6	POSSIBLE FILL: Very-stiff to hard brown becoming dark-brown silty clay, little fine to coarse sand, trace fine to coarse gravel, slightly organic.		H=3.0-4.0
	2		3/3/4			H=3.0-4.1
5	3		NX REC 93% RQD 0%	Medium-hard light-gray and light-brown limestone, nearly horizontally bedded, many diagonal fractures, few solution cavities, contains fossils.		
10						
15				- Encountered auger refusal at 5.0'.		
20						
25						

WATER LEVEL: "Dry"
WATER NOTE: Before Coring
DATE: 2/23/00

SYMBOLS USED TO INDICATE TEST RESULTS
G - GRADATION
Q - UNCONFINED COMPR
T - TRIAXIAL COMPR
C - CONSOLIDATION
SEE SEPARATE CURVES
H - PENETROMETER (tsf)
W - UNIT DRY WEIGHT (pcf)
D - RELATIVE DENSITY (%)

BORLJ 16863000.GPJ BBC&M.GDT 4/5/00

JOB: 01106863.000

BBC&M ENGINEERING, INC.

LOG OF BORING NO. B-11
DUBLIN STORM WATER IMPROVEMENTS
WENDY'S / RIVERSIDE DRIVE IMPROVEMENTS

LOCATION: See Plate 2D
ELEVATION: 793.0
DATE: 2/23/00
DRILLING METHOD: 4-1/2" O.D. Continuous-flight Auger
COMPLETION DEPTH: 10.0'
SAMPLER(S): 2" O.D. Split-barrel Sampler; NX Rock Core Barrel

DEPTH, FEET	SAMPLE NUMBER	SAMPLE	SAMPLE EFFORT	DESCRIPTION	NATURAL CONSISTENCY INDEX (NATURAL MOISTURE CONTENT; PLASTIC LIMIT – LIQUID LIMIT; 10 20 30 40)	TEST RESULTS
0				ASPHALT - 3 INCHES		
				FILL: Loose light-gray and light-brown fine to coarse gravel, "and" fine to coarse sand, trace silt.		
	1	■	3/3/5			
	2	■	6/4/3			
5						
	3	■	3/50-4"R			
				Medium-hard light-gray and light-brown limestone, nearly horizontally bedded, many diagonal and vertical fractures, few solution cavities.		
	4	■	NX REC 100% RQD 0%			
10						
15				- Spoon refusal at 6.3'.		
				- Auger refusal at 8.5'.		
20						
25						

WATER LEVEL: ▽ "Dry" ▼ ▼
WATER NOTE: Before Coring
DATE: 2/23/00

SYMBOLS USED TO INDICATE TEST RESULTS
G - GRADATION
Q - UNCONFINED COMPR
T - TRIAXIAL COMPR
C - CONSOLIDATION
SEE SEPARATE CURVES
H - PENETROMETER (tsf)
W - UNIT DRY WEIGHT (pcf)
D - RELATIVE DENSITY (%)

BORLJ 16863000.GPJ CM.GDT 4/5/00

JOB: 01106863.000

METRIC

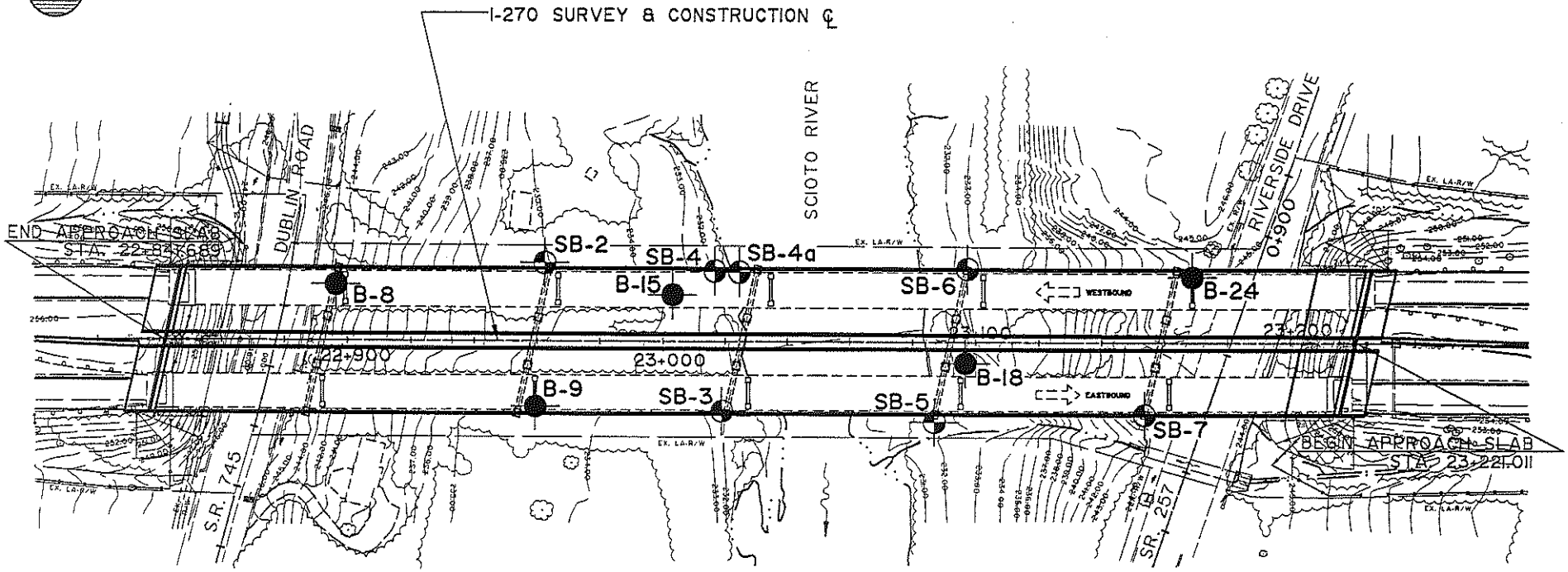

LEGEND

SB-2 — BORING LOCATION AND NUMBER

B-8 — BORING PREVIOUSLY PREFORMED BY OTHERS

PLAN OF BORINGS

REPLACEMENT STRUCTURE
No. FRA-270-22842
FRANKLIN COUNTY, OHIO

BBC&M
6190 Enterprise Court
Dublin, Ohio 43016-7297
Phone (614) 793-2226

Drawing No: 5889A020.DWG		
Drawn By: S.P.S.	Approved By: R.S.W.	
Date: 08/13/97	Revision:	Scale: 1 : 2000

PLATE 54

BBC&M ENGINEERING, INC.

LOG OF BORING NO. SB-7
REPLACEMENT STRUCTURE NO. FRA-270-22842
FRANKLIN COUNTY, OHIO

TYPE: 83mm I.D. Hollow-stem Auger; NX Rock Core Barrel

LOCATION: STA 23+153.58, 23.63m Rt. of Centerline

COMPLETION DEPTH: 7.38m ELEVATION: 243.91 DATE: 7/8/97

DEPTH, METERS	SAMPLE NO.	SAMPLES	SAMPLING EFFORT	HAND PENE-TROMETER (kPa)	MOISTURE CONTENT (%)	LIQUID LIMIT (%)	PLASTIC LIMIT (%)	AGG.	C.S.	F.S.	SILT	CLAY	DESCRIPTION
0													FILL: Brown silty clay, little fine to coarse sand, trace fine gravel. Visual
1													POSSIBLE FILL: Brown fine to coarse gravel, some fine to coarse sand, trace silt. Visual
	1		REC 97%	RQD 0%									Medium-hard to hard brown and gray limestone, nearly horizontally bedded, numerous diagonal and vertical fractures, few calcite streaks, few very small solution cavities, few clay-filled fractures, slightly fossiliferous.
2	2		REC 100%	RQD 0%									
3			REC 100%	RQD 4%									
4	3												
5													
6	4		REC 100%	RQD 78%									Medium-hard to hard brown and gray limestone, nearly horizontally bedded, few diagonal and vertical fractures, occasional clay-filled fracture.
7													
8													- No seepage noted prior to coring. - Lost ~75% water return from 5.79m to 7.01m. - Lost 100% water return at 7.01m.
9													
10													

WATER LEVEL:
WATER NOTE:
DATE:

JOB: 5889

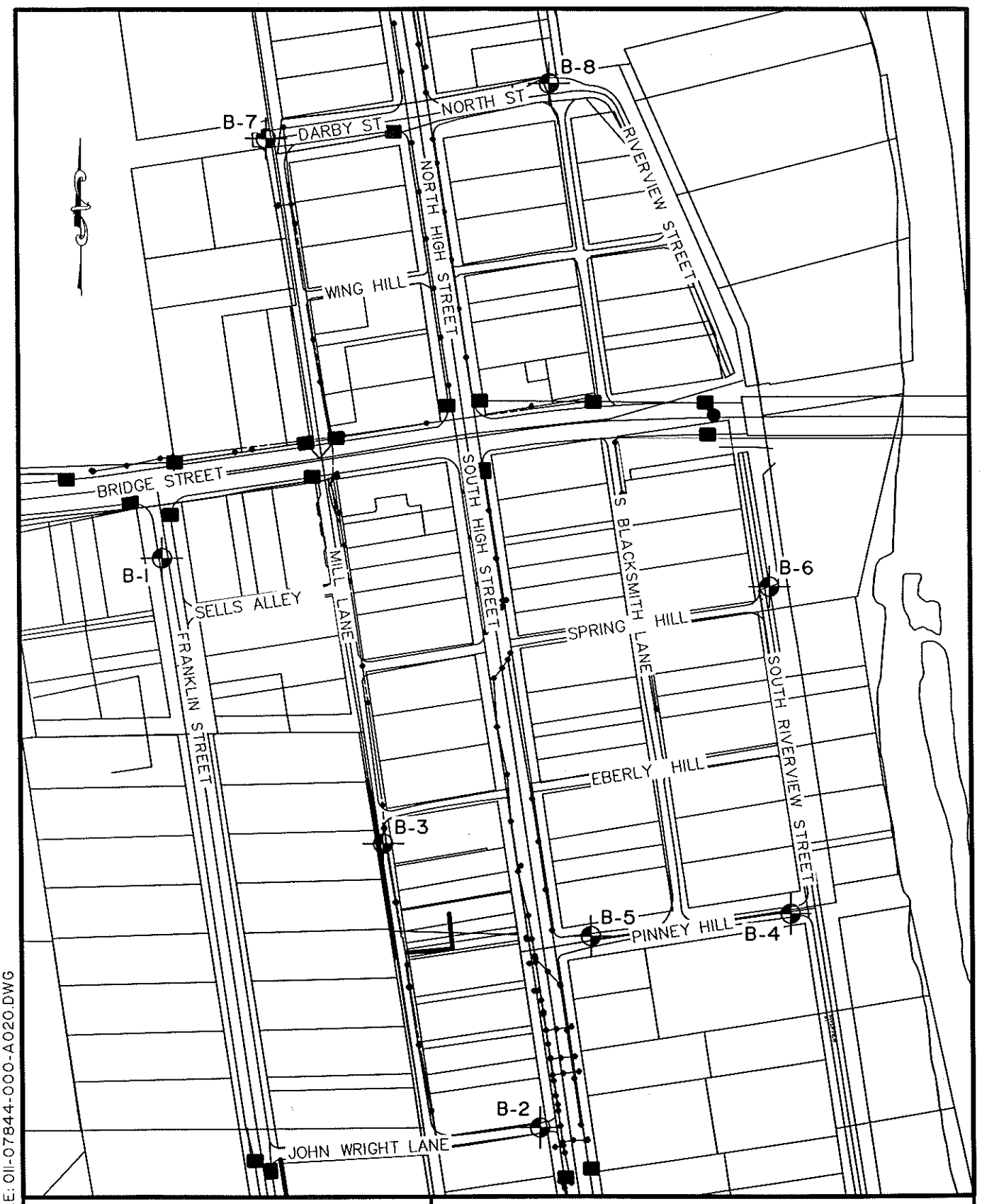

LEGEND

B-1 — BORING NUMBER AND LOCATION

VICINITY MAP

OLD DUBLIN STORMWATER SEWER STUDY
DUBLIN, OHIO

Project: 011-07844-000	Drawn By: J.L.P.
Drawing Date: 11/12/01	Approved By: S.A.H.
Revision Date:	Scale: 1" = 200'

BBC&M
Columbus (614) 793-2226
Cleveland (440) 585-9995
Cincinnati (513) 771-8471

BBC&M DRAWING FILE: 011-07844-000-A020.DWG

BBC&M ENGINEERING, INC.

LOG OF BORING NO. B-8
OLD DUBLIN STORMWATER SEWER STUDY
DUBLIN, OH

LOCATION: See Plate 2 ELEVATION: 808.5+/- DATE: 11/1/01

DRILLING METHOD: 3-1/4" I.D. Hollow-stem Auger COMPLETION DEPTH: 7.5'

SAMPLER(S): NX Rock Core Barrel

DEPTH, FEET	SAMPLE NUMBER	SAMPLE	SAMPLE EFFORT	DESCRIPTION	NATURAL CONSISTENCY INDEX / NATURAL MOISTURE CONTENT / PLASTIC LIMIT / LIQUID LIMIT (10 20 30 40)	TEST RESULTS
0				ASPHALT - 6 INCHES		
				GRANULAR BASE - 12 INCHES		
				Stiff to very-stiff (est.) brown silty clay, little fine to coarse sand, trace fine to coarse gravel (based on cuttings).		
				Apparent weathered limestone (highly fractured).		
5	1		REC 64% RQD 15%	Medium-hard light-gray limestone, nearly horizontally bedded, many horizontal and vertical fractures, contains calcite crystals (core pieces broke along solution filled fractures).		
10						
15				- Encountered auger refusal at 4.5'. - No seepage or groundwater encountered prior to coring.		
20						
25						

WATER LEVEL: ▽ ▼ ▼
WATER NOTE:
DATE:

SYMBOLS USED TO INDICATE TEST RESULTS

G - GRADATION
Q - UNCONFINED COMPR
T - TRIAXIAL COMPR
C - CONSOLIDATION
} SEE SEPARATE CURVES

H - PENETROMETER (tsf)
W - UNIT DRY WEIGHT (pcf)
D - RELATIVE DENSITY (%)

BORLJ 17844000.GP. 4.GDT 11/12/01

JOB: 01107844.000

Images: ~ Riverside Dr. Site Aerial 2009 Auditor.jp2 ~ TOPO!map.JPG
Xrefs:
File Last Updated: Jun 25, 2013
Plot Info: 6-25-2013 @ 4:40pm By: dverhulst
S&ME Filename: I:\DEPTS\cadd\Drawings\BST Projects\1171-Geotechnical\1171-13-042\1171-13-042C\PLANS\Site Topo from OSIP.dwg Layout: 8.5x11L

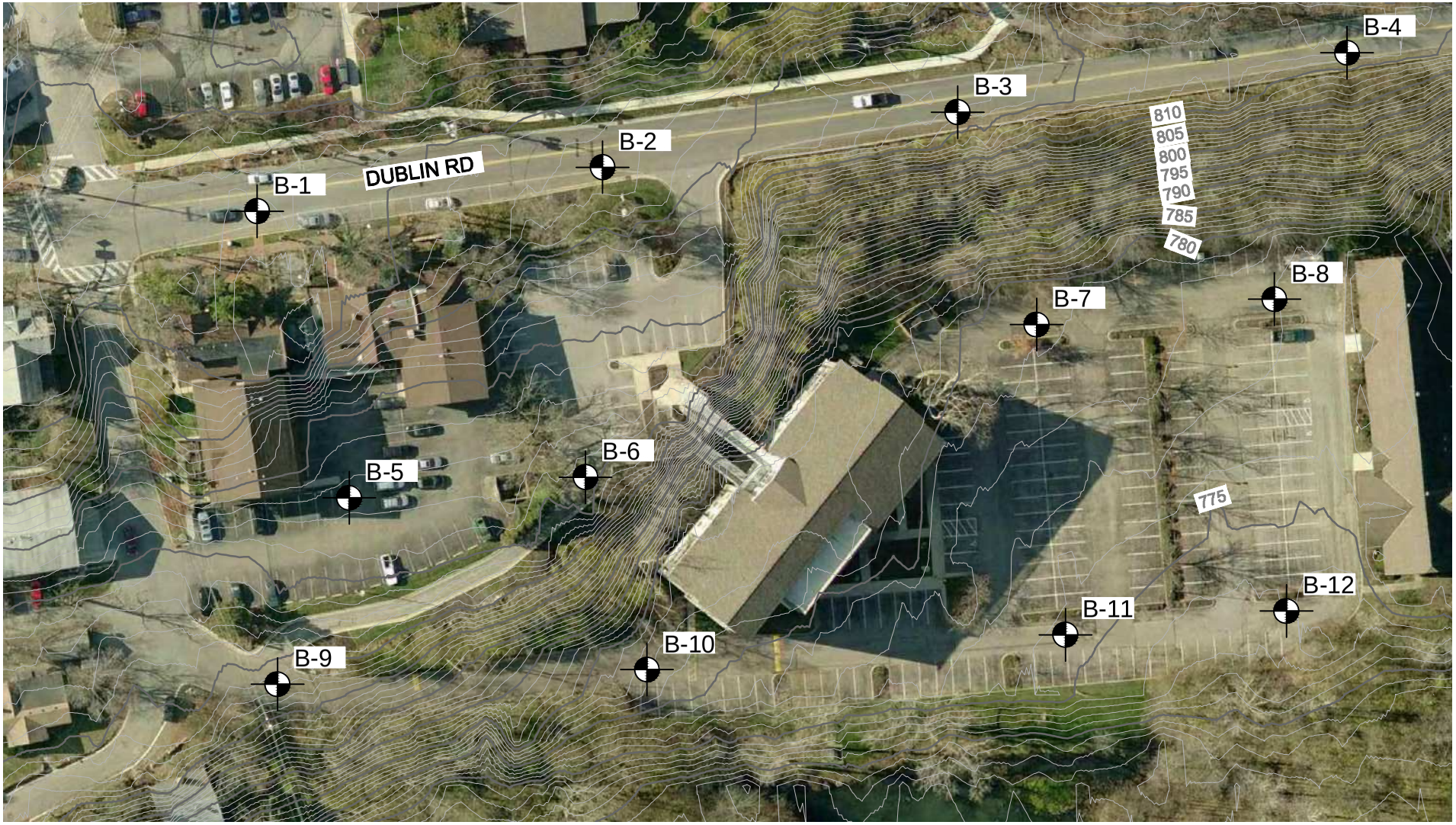

0 80 160
SCALE INFEET

LEGEND

B-1 BORING NUMBER AND LOCATION

PLAN OF BORINGS

ROUTE 161-RIVERSIDE DRIVE
AREA IMPROVEMENTS
DUBLIN, OHIO

Project: 1171-13-042C	Drawn By: DCV	
Drawing Date: 6-25-2013	Approved By: RTE	
Last Updated: 6-25-2013	Scale: GRAPHIC	1:1

S&ME
WWW.SMEINC.COM
ENGINEERING FIRM. 03530

PLATE 58

LOG OF BORING NO. B-9
ROUTE 161 - RIVERSIDE DR. AREA IMPROVEMENTS
DUBLIN, OHIO

S&ME

LOCATION: See Plate 2A of Appendix A. ELEVATION: 802 ± DATE: 6/11/13

DRILLING METHOD: 4-1/2" O.D. Continuous-flight Auger COMPLETION DEPTH: 6.5'

SAMPLER(S): 2" O.D. Split-barrel Sampler

ELEV.	DEPTH, FEET	SAMPLE NUMBER	SAMPLE	SAMPLE EFFORT	N_{60}	SAMPLE REC-%	DESCRIPTION	NATURAL CONSISTENCY INDEX / NATURAL MOISTURE CONTENT (PLASTIC LIMIT – LIQUID LIMIT; 10 20 30 40)	TEST RESULTS
801.7	0						ASPHALT - 3 INCHES		
		1	■	6/10/20	40	47	POSSIBLE FILL: Hard brown and gray clayey silt, some fine to coarse sand, "and" fine to coarse gravel (limestone fragments).		H=4.5+
	5	2	■	4/3/2	7	80			
796.5							Hard gray highly fractured limestone.		
795.5									
	10						- No seepage encountered. - Encountered auger refusal at 6.5'. - Borings located using field pacing and taping methods and should be considered approximate. - Elevations estimated from available topomapping and should be considered approximate.		
	15								
	20								
	25								

2010 NEW DEFAULT BORING LOG-W/ N60

WATER LEVEL: "Dry"
WATER NOTE: Caved at 6.1
DATE: 6/11/2013

SYMBOLS USED TO INDICATE TEST RESULTS
G - Gradation, Q - Uncon Comp, T - Triax Comp, C - Consol. — See Separate Curves
H - Penetrometer (tsf)
W - Unit Dry Wt (pcf)
D - Relative Dens (%)

Drill Rod Energy Ratio : .808
Last Calibration Date : 08/25/11
Drill Rig Number : Truck 45B

JOB: 1171-13-042C

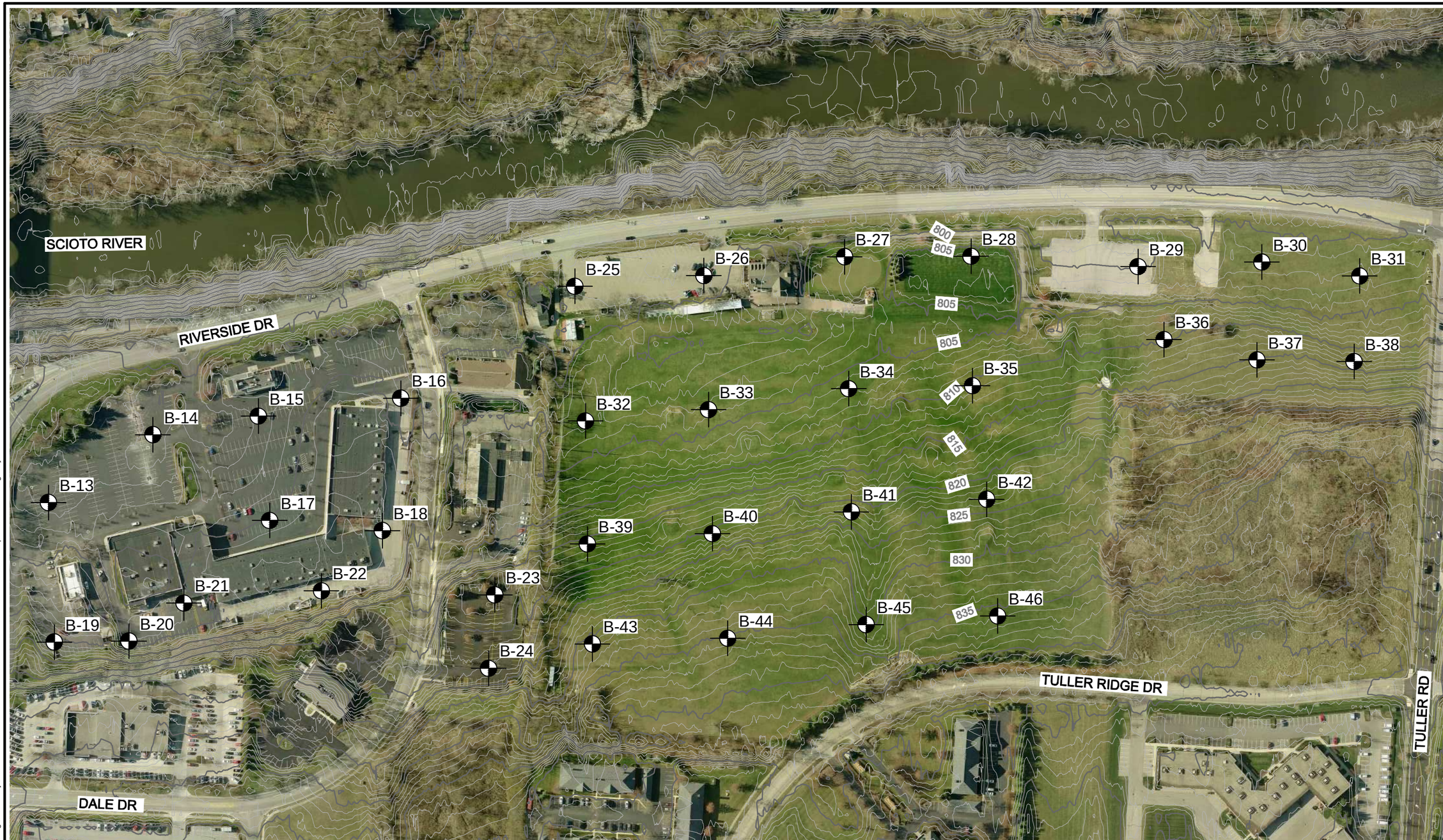

0 200 400

SCALE INFEET

LEGEND

B-13 BORING NUMBER AND LOCATION

PLAN OF BORINGS

ROUTE 161-RIVERSIDE DRIVE
AREA IMPROVEMENTS
DUBLIN, OHIO

Project: 1171-13-042C	Drawn By: DCV	
Drawing Date: 6-25-2013	Approved By: RTE	
Last Updated: 6-25-2013	Scale: GRAPHIC	1:1

S&ME
WWW.SMEINC.COM
ENGINEERING FIRM. 03530

Images: ~ Riverside Dr. Site Aerial 2009 Auditor.jp2 ~ TOPO\map.JPG
Xrefs:
File Last Updated: Jun 25, 2013
Plot Info: 6-25-2013 @ 4:44pm By: dverhulst
S&ME Filename: I:\DEPTS\cadd\Drawings\BST Projects\1171-Geotechnical\1171-13-042\1171-13-042C\PLANS\Site Topo from OSIP.dwg Layout: 11x17

LOG OF BORING NO. B-28
ROUTE 161 - RIVERSIDE DR. AREA IMPROVEMENTS
DUBLIN, OHIO

S&ME

LOCATION: See Plate 2B of Appendix A. ELEVATION: 805.9 DATE: 6/11/13

DRILLING METHOD: 4-1/2" O.D. Continuous-flight Auger COMPLETION DEPTH: 11.2'

SAMPLER(S): 2" O.D. Split-barrel Sampler

ELEV.	DEPTH, FEET	SAMPLE NUMBER	SAMPLE	SAMPLE EFFORT	N_{60}	SAMPLE REC-%	DESCRIPTION	NATURAL CONSISTENCY INDEX / NATURAL MOISTURE CONTENT (PLASTIC LIMIT – LIQUID LIMIT; 10 20 30 40)	TEST RESULTS
805.4	0						TOPSOIL - 6 INCHES		
		1		2 / 3 / 3	8	100	FILL: Stiff to hard dark-brown and gray silty clay, some fine to coarse sand, trace fine gravel and roots.		H=4.5+
	5	2		4 / 2 / 9	15	27			H=1.5
798.4							Very-stiff gray silty clay, little fine to coarse sand, trace fine gravel.		
796.4		3		4 / 5 / 50-3"R		46			H=3.0
	10						Hard gray highly fractured limestone.		
794.7							- No seepage encountered. - Encountered auger refusal at 11.2'. - Borings located using field pacing and taping methods and should be considered approximate. - Elevations estimated from available topomapping and should be considered approximate.		
	15								
	20								
	25								

WATER LEVEL: "Dry"
WATER NOTE: Caved at 9.2
DATE: 6/11/2013

SYMBOLS USED TO INDICATE TEST RESULTS

G - Gradation, Q - Uncon Comp, T - Triax Comp, C - Consol. — See Separate Curves

H - Penetrometer (tsf)
W - Unit Dry Wt (pcf)
D - Relative Dens (%)

Drill Rod Energy Ratio : .808
Last Calibration Date : 08/25/11
Drill Rig Number : Truck 45B

2010 NEW DEFAULT BORING LOG-W/ N60

JOB: 1171-13-042C

F. ASBESTOS REPORT

ASBESTOS REPORT WILL BE MADE AVAILABLE AS PART OF ADDENDUM 1 TO THE CITY OF DUBLIN, SR 161 / RIVERSIDE DRIVE ROUNDABOUT (PART 1) AND RIVERSIDE DRIVE REALIGNMENT AND OTHER PUBLIC IMPROVEMENTS (PART 2) PROJECT BID DOCUMENT.

G. STANDARD DRAWINGS

City of Dublin
ENGINEERING

May 1, 2014

STANDARD CONSTRUCTION DRAWINGS

Paul A. Hammersmith, P.E.

Director of Engineering / City Engineer

City of Dublin
ENGINEERING

STANDARD CONSTRUCTION DRAWINGS

NUMBER	TITLE	PGS	DATE
	MD - MISCELLANEOUS DETAILS		
MD-01	PLAN SIGNATURES EXAMPLE	1	5/1/2014
MD-02	RESIDENTIAL DRIVEWAY SLOPE	1	5/1/2014
MD-03	MONUMENT BOX DETAIL	1	5/1/2014
MD-04	PLAT SIGNATURE EXAMPLE	2	5/1/2014
MD-05	RESIDENTIAL ROOF DRAIN CONNECTION	1	5/1/2014
	PD - PEDESTRIAN DETAILS		
PD-01	TYPICAL LOCATION PLAN FOR SIDEWALK CURB RAMPS	1	5/1/2014
PD-02	CURB RAMP GENERAL NOTES	2	5/1/2014
PD-03	DETECTABLE WARNINGS	1	5/1/2014
PD-04	CURB RAMP TYPE A DIAGONAL IN TREE LAWN	1	5/1/2014
PD-05	CURB RAMP TYPE B DIAGONAL WITH FLARES	1	5/1/2014
PD-06	CURB RAMP TYPE C IN TREE LAWN	1	5/1/2014
PD-07	CURB RAMP TYPE D OBSTRUCTED ONE SIDE	1	5/1/2014
PD-08	CURB RAMP TYPE E ALLEYS AND DRIVEWAYS	1	5/1/2014
PD-09	CURB RAMP TYPE F ALLEYS AND DRIVEWAYS	1	5/1/2014
PD-10	CURB RAMP TYPE G PARALLEL LANDING, 2 RAMPS	1	5/1/2014
PD-11	CURB RAMP TYPE H MEDIAN RAMP WITH LANDING	1	5/1/2014
PD-12	CURB RAMP TYPE I PERPENDICULAR AND PARALLEL	1	5/1/2014
	RD - ROADWAY		
RD-01	TYPICAL STREET SECTION	1	5/1/2014
RD-02	COMBINATION CONCRETE CURB AND GUTTER	1	5/1/2014
RD-03	TYPICAL GUTTER SECTION TRANSITIONS	1	5/1/2014
RD-04	TYPICAL PAVEMENT SECTION FOR PRIVATE STREETS	1	5/1/2014
RD-05	CONCRETE SIDEWALK AND SHARED USE PATH	1	5/1/2014
RD-06	SHARED USE PATH: STANDARD AND HEAVY DUTY	1	5/1/2014
RD-07	RESIDENTIAL AND COMMERCIAL DRIVEWAYS	9	5/1/2014
RD-08	CUL-DE-SAC: 300' - 1000'	1	5/1/2014
RD-09	CUL-DE-SAC LESS THAN 300'	1	5/1/2014
RD-10	TYPICAL STREET NAME SIGN	1	5/1/2014
RD-11	STRAIGHT 18" CONCRETE CURB	1	5/1/2014

City of Dublin
ENGINEERING

STANDARD CONSTRUCTION DRAWINGS

NUMBER	TITLE	PGS	DATE
RD-12	BRICK PAVER SIDEWALK	1	5/1/2014
RD-13	ROUNDABOUT TRUCK APRON DETAIL	1	5/1/2014
RD-14	BRICK PAVER MEDIAN DETAIL	1	5/1/2014
SA - SANITARY SEWER			
SA-01	SANITARY MANHOLE DETAILS	1	5/1/2014
SA-02	SANITARY MANHOLE LID	1	5/1/2014
SA-03	TYPICAL SANITARY RISER DETAIL	1	5/1/2014
SA-04	CONCRETE COLLAR FOR MANHOLES IN PAVEMENT	1	
SL - STREET LIGHTING			
SL-01	LUMINAIRE	2	5/1/2014
SL-02	TRANSFORMER BASE	2	5/1/2014
SL-03	LIGHT POLE	1	5/1/2014
SL-04	POLE FOUNDATION	2	5/1/2014
SL-05	TRENCHES	3	5/1/2014
SL-06	QUICK DISCONNECT	1	5/1/2014
SL-07	SAMPLE LIGHTING QUANTITIES SCHEDULE	1	5/1/2014
SL-08	STREET LIGHT LOCATION	1	5/1/2014
SL-09	DECORATIVE LUMINAIRE	3	5/1/2014
SL-10	DECORATIVE LIGHT POLE - SINGLE HEAD	1	5/1/2014
SL-11	DECORATIVE LIGHT POLE - 12' DOUBLE HEAD	1	5/1/2014
SL-12	DECORATIVE LIGHT POLE FOUNDATION	1	5/1/2014
SL-13	LIGHTING CONTROLLER	4	5/1/2014
ST - STORM SEWER			
ST-01	STONE VENEER FOR CONCRETE STRUCTURES	1	5/1/2014
ST-02	SAFETY GRATE	1	5/1/2014
ST-03	STORM SEWER MANHOLE	1	5/1/2014
ST-04	DRAINS TO RIVER CURB INLET	1	5/1/2014
ST-05	ROCK CHANNEL PROTECTION DETAIL	1	5/1/2014
ST-06	STORM SEWER WITH "O" RINGS RUBBER GASKET JOINTS	1	5/1/2014
WA - WATER			
WA-01	FIRE HYDRANT	1	5/1/2014

SIGNATURES BELOW SIGNIFY ONLY CONCURRENCE WITH THE GENERAL PURPOSES AND GENERAL LOCATION OF THE PROJECT AND DOES NOT CONSTITUTE ASSURANCE TO OPERATE AS INTENDED. ALL TECHNICAL DETAILS REMAIN THE RESPONSIBILITY OF THE PROFESSIONAL CIVIL ENGINEER PREPARING THE PLANS.

APPROVED:

CITY ENGINEER, CITY OF DUBLIN, OHIO — DATE
PAUL A. HAMMERSMITH, P.E.

* DIRECTOR OF LAND USE & LONG RANGE PLANNING, CITY OF DUBLIN, OHIO — DATE

NOTE: APPROVAL ON THE PART OF THE CITY OF COLUMBUS IS GIVEN PURSUANT TO THE PROVISIONS OF THE SEWER (AND/OR WATER) SERVICE AGREEMENT WITH THE CITY OF DUBLIN, OHIO DATED APRIL 13, 1993.

DIRECTOR, DEPARTMENT OF PUBLIC UTILITIES — DATE
CITY OF COLUMBUS, OHIO

ADMINISTRATOR, DIVISION OF SEWERS AND DRAINS (AND/OR WATER) — DATE
CITY OF COLUMBUS, OHIO

* FOR COMMERCIAL PERMITS ONLY

Date: 05/01/2014

City of Dublin
ENGINEERING

STANDARD DRAWING

PLAN SIGNATURES EXAMPLE

SHEET 1 OF 1

DRAWING NO. ***MD-01***

TYPICAL FRONT LOAD GARAGE

A = ELEVATION OF THE GARAGE FLOOR

C = ELEVATION AT THE BACK EDGE OF THE PEDESTRIAN PATH

$$\text{SLOPE} = \frac{A - C}{\text{DISTANCE BETWEEN A \& C}} \times 100\% \leq 8.00\%$$

TYPICAL SIDE LOAD GARAGE

B = ELEVATION OF THE DRIVEWAY

C = ELEVATION AT THE BACK EDGE OF THE PEDESTRIAN PATH

$$\text{SLOPE} = \frac{B - C}{\text{DISTANCE BETWEEN B \& C}} \times 100\% \leq 8.00\%$$

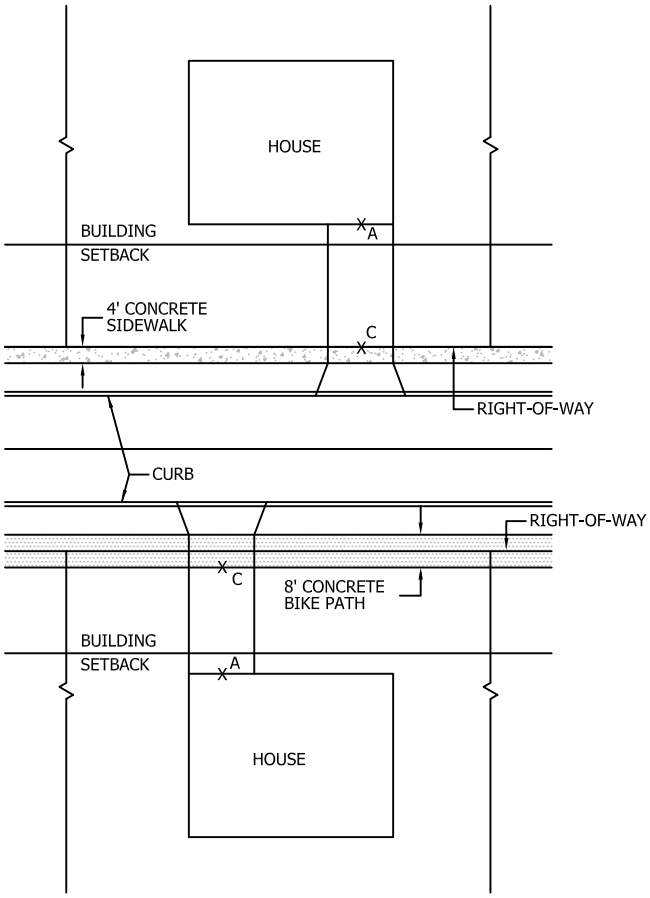

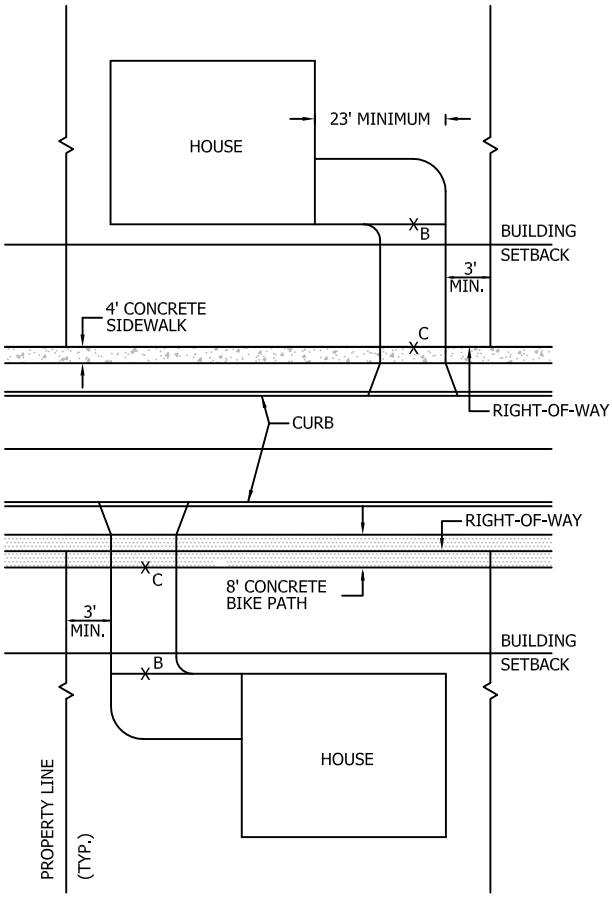

NOTES:

1. ELEVATION 'B' SHALL TYPICALLY REFLECT A 2% SLOPE FROM THE GARAGE FLOOR.

2. THESE ARE TYPICAL DRIVEWAY ARRANGEMENTS. OTHER CONFIGURATIONS CAN OCCUR AND WILL BE REVIEWED ON A CASE BY CASE BASIS.

Date: 05/01/2014

City of Dublin
ENGINEERING

STANDARD DRAWING

RESIDENTIAL DRIVEWAY SLOPE

SHEET 1 OF 1

DRAWING NO. ***MD-02***

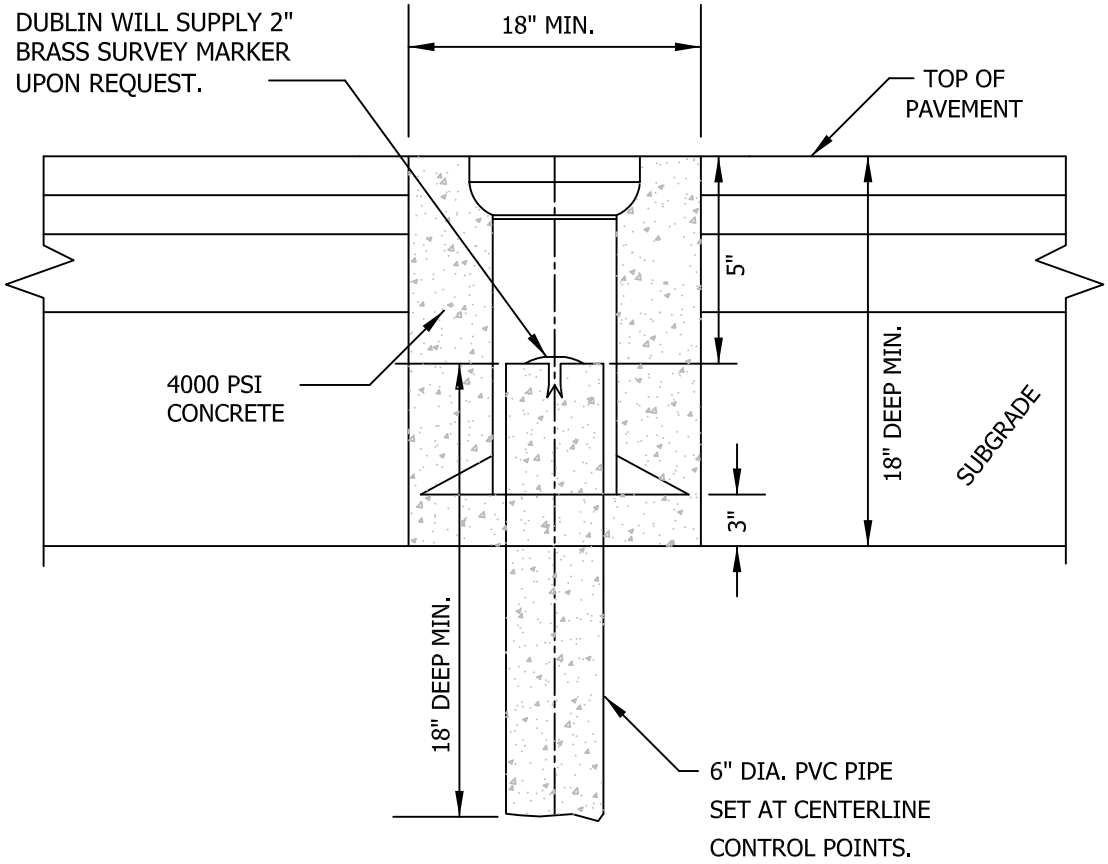

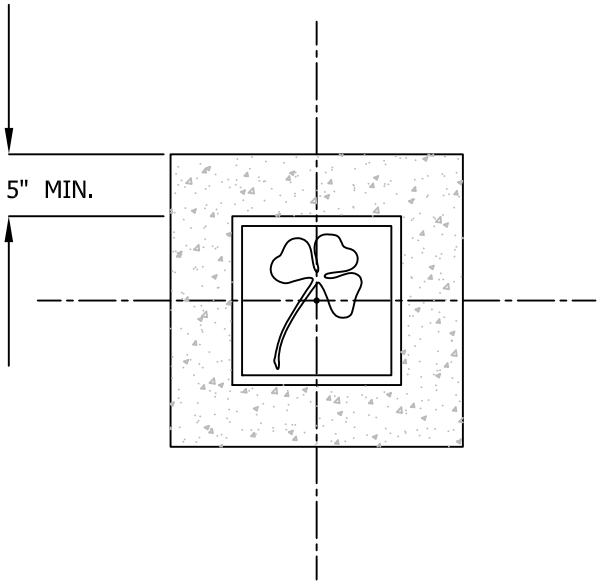

NOTES:

APPROVED MONUMENT BOX TYPES

1. NEENAH R-1968 TYPE 36-B (ADJUSTABLE)
2. EAST JORDAN IRON WORKS, INC. 8371 (ADJUSTABLE)

Date: 05/01/2014

City of Dublin ENGINEERING

STANDARD DRAWING

MONUMENT BOX DETAIL

SHEET 1 OF 1

DRAWING NO. **MD-03**

SITUATED IN THE STATE OF OHIO, COUNTY OF FRANKLIN, CITY OF DUBLIN, IN VIRGINIA MILITARY SURVEY NO. 2542 AND BEING ALL OF A _____ ACRES OF LAND, MORE OR LESS, CONVEYED TO _____, BY DEED OF RECORD IN INSTRUMENT OR DEED _____, RECORDER'S OFFICE, FRANKLIN COUNTY, OHIO.

EASEMENTS ARE RESERVED WHERE INDICATED ON THE PLAT FOR THE CONSTRUCTION, OPERATION AND MAINTENANCE OF ALL PUBLIC AND PRIVATE UTILITIES AND THE CABLE TELEVISION INDUSTRY BOTH ABOVE AND BENEATH THE SURFACE OF THE GROUND AND WHERE NECESSARY ARE FOR THE CONSTRUCTION OPERATION AND MAINTENANCE OF SERVICE CONNECTIONS TO ALL ADJACENT LOTS AND LANDS AND FOR STORM WATER DRAINAGE.

THE UNDERSIGNED, _____ (COMPANY NAME), BY _____ (PERSONS NAME), _____(TITLE), OWNER OF THE LANDS PLATTED HEREIN, DULY AUTHORIZED IN THE PREMISES, DOES HEREBY CERTIFY THAT THIS PLAT CORRECTLY REPRESENTS ITS "STREET & EASEMENTS DEDICATION PLAT", A PLAT DEDICATING _____ ACRES OF LAND TO THE CITY OF DUBLIN, OHIO, DOES HEREBY ACCEPT THIS PLAT OF SAME AND DOES HEREBY DEDICATE TO PUBLIC USE AS SUCH ALL OR PARTS OF THE STREET SHOWN HEREON AND NOT DEDICATED HERETOFORE.

IN WITNESS THEREOF, _____ (NAME), _____ (TITLE), _____ (COMPANY NAME) HAS HEREUNTO SET HER HAND THIS_____DAY OF _____ , 20_ _.

SIGNED AND ACKNOWLEDGED
IN THE PRESENCE OF: _____ (COMPANY NAME)

SIGN: _____ BY: _____
PRINT: _____ (PERSONS NAME)
_____ (TITLE)

SIGN: _____
PRINT:

STATE OF OHIO S.S.

BEFORE ME, A NOTARY PUBLIC IN AND FOR SAID STATE, PERSONALLY APPEARED _____ (PERSONS NAME & TITLE) FOREGOING INSTRUMENT TO BE HER FREE AND VOLUNTARY ACT AND DEED AND THE FREE AND VOLUNTARY ACT AND OF DEVELOPMENT, _____ (COMPANY NAME) WHO ACKNOWLEDGED THE SIGNING OF THE DEED OF _____ (COMPANY NAME) FOR THE USE AND PURPOSES THEREIN EXPRESSED.

IN WITNESS WHEREOF, I HAVE HEREUNTO SET MY HAND AND AFFIXED MY OFFICIAL

SEAL THIS _____DAY OF_____ , 20_ _.

MY COMMISSION EXPIRES: _____ _____
NOTARY PUBLIC, STATE OF OHIO

Date: 05/01/2014

City of Dublin
ENGINEERING

STANDARD DRAWING

PLAT SIGNATURE EXAMPLE

SHEET 1 OF 2

DRAWING NO. ***MD-04***

APPROVED THIS ____DAY OF _____,
20_ _.

_____
SECRETARY OF PLANNING COMMISSION
CITY OF DUBLIN, OHIO

APPROVED THIS ____DAY OF _____,
20_ _.

_____
CITY ENGINEER
CITY OF DUBLIN, OHIO

APPROVED THIS ____ DAY OF _____, 20_ _, BY VOTE OF COUNCIL, WHEREIN ALL OF THE BOULEVARD, DRIVES, GREEN, LOOP AND ROADS DEDICATED HEREON ARE ACCEPTED AS SUCH BY THE COUNCIL OF THE CITY OF DUBLIN, OHIO.

IN WITNESS THEREOF I HAVE HEREUNTO
SET MY HAND AND AFFIXED MY SEAL THIS
____DAY OF _____ , 20_ _.

_____
CLERK OF COUNCIL, DUBLIN, OHIO

TRANSFERRED THIS ____DAY OF _____ , 20_ _.

_____
AUDITOR, _____ COUNTY, OHIO

FILED FOR RECORD THIS ____DAY OF _____,
20_ _ AT _____ M. FEE $ _____
FILE NO. _____

_____
DEPUTY AUDITOR, _____ COUNTY, OHIO

_____
RECORDER, _____ COUNTY, OHIO

RECORDED THIS _____ DAY OF _____ ,
20_ _.

PLAT BOOK _____ PAGES _____

_____
DEPUTY RECORDER, _____ COUNTY, OHIO

MORE THAN ONE COUNTY

TRANSFERRED THIS ____DAY OF _____ , 20_ _.

_____
AUDITOR, _____ COUNTY, OHIO

FILED FOR RECORD THIS ____DAY OF _____,
20_ _ AT _____ M. FEE $ _____
FILE NO. _____

_____
RECORDER, _____ COUNTY, OHIO

RECORDED THIS _____ DAY OF _____ ,
20_ _.

PLAT BOOK _____ PAGES _____

Date: 05/01/2014

City of Dublin
ENGINEERING

STANDARD DRAWING

PLAT SIGNATURE EXAMPLE

SHEET 2 OF 2

DRAWING NO. ***MD-04***

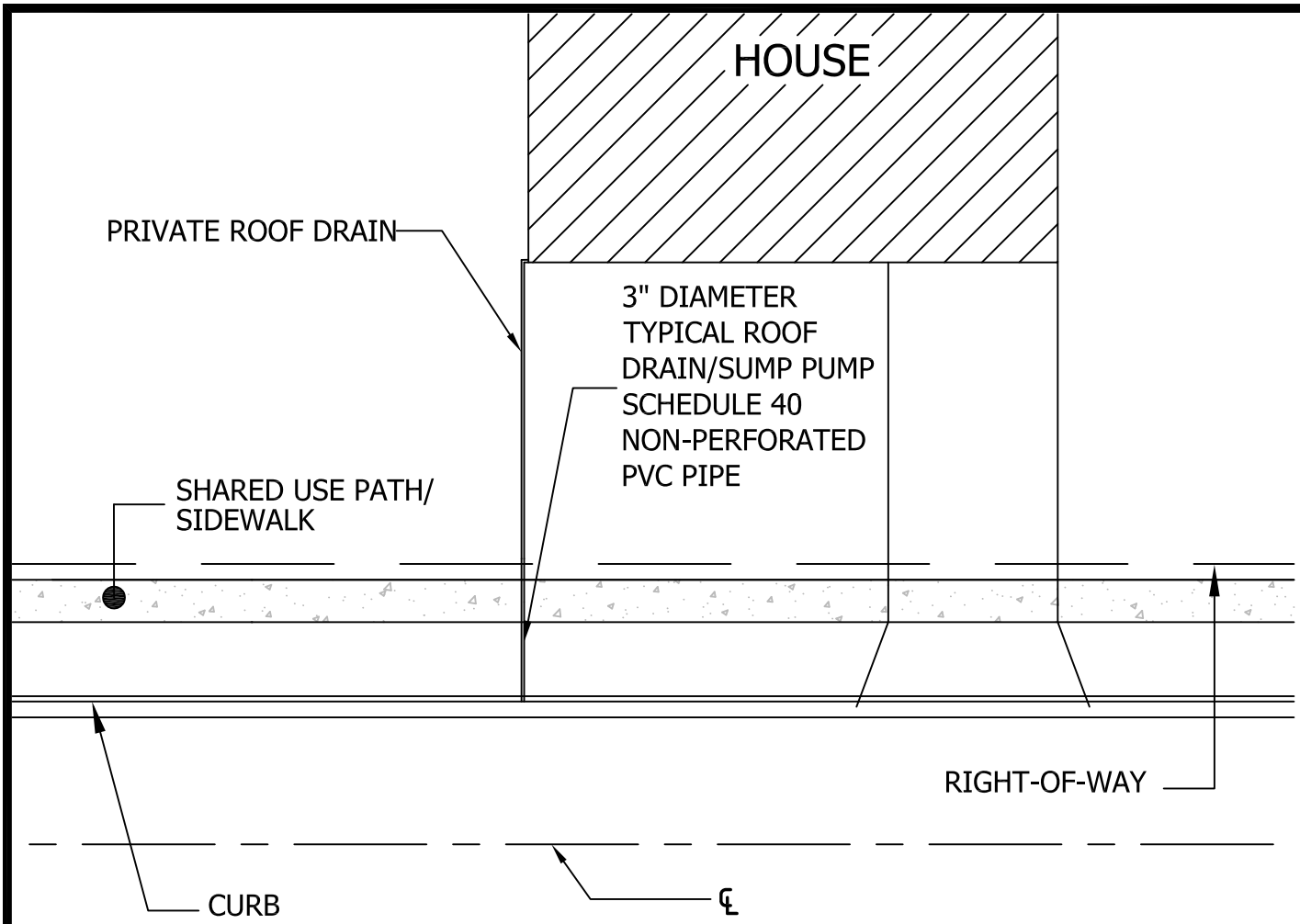

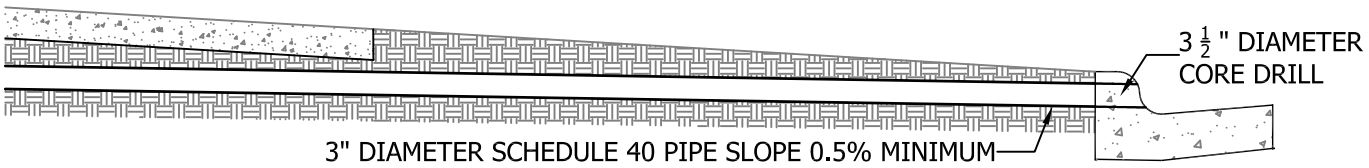

CURB CONNECTION DETAIL

NOTES:

1. ALL SUMP PUMP/DOWNSPOUT DRAIN TILE SHALL BE SCHEDULE 40 SOLID WALL (NON-PERFORATED) PIPE WITHIN THE PUBLIC RIGHT-OF-WAY (R/W).
2. TYPICAL RESIDENTIAL TYPE CONNECTIONS WILL BE 3" IN DIAMETER.
3. THE CONNECTION AT THE CURB SHALL BE CORE DRILLED.
4. THE PIPE SHALL EXTEND AT LEAST TWO FEET BEYOND THE SIDEWALK OR SHARED USE PATH LOCATION.
5. PIPE SLOPE TO BE 0.5% MINIMUM TOWARDS STREET.
6. ROOF DRAIN/SUMP PUMP PIPE SHALL BE PRIVATELY OWNED AND MAINTAINED, INCLUDING IN THE R/W.

Date: 09/16/2014

City of Dublin
ENGINEERING

STANDARD DRAWING

RESIDENTIAL ROOF DRAIN CONNECTION

SHEET 1 OF 1

DRAWING NO. ***MD-05***

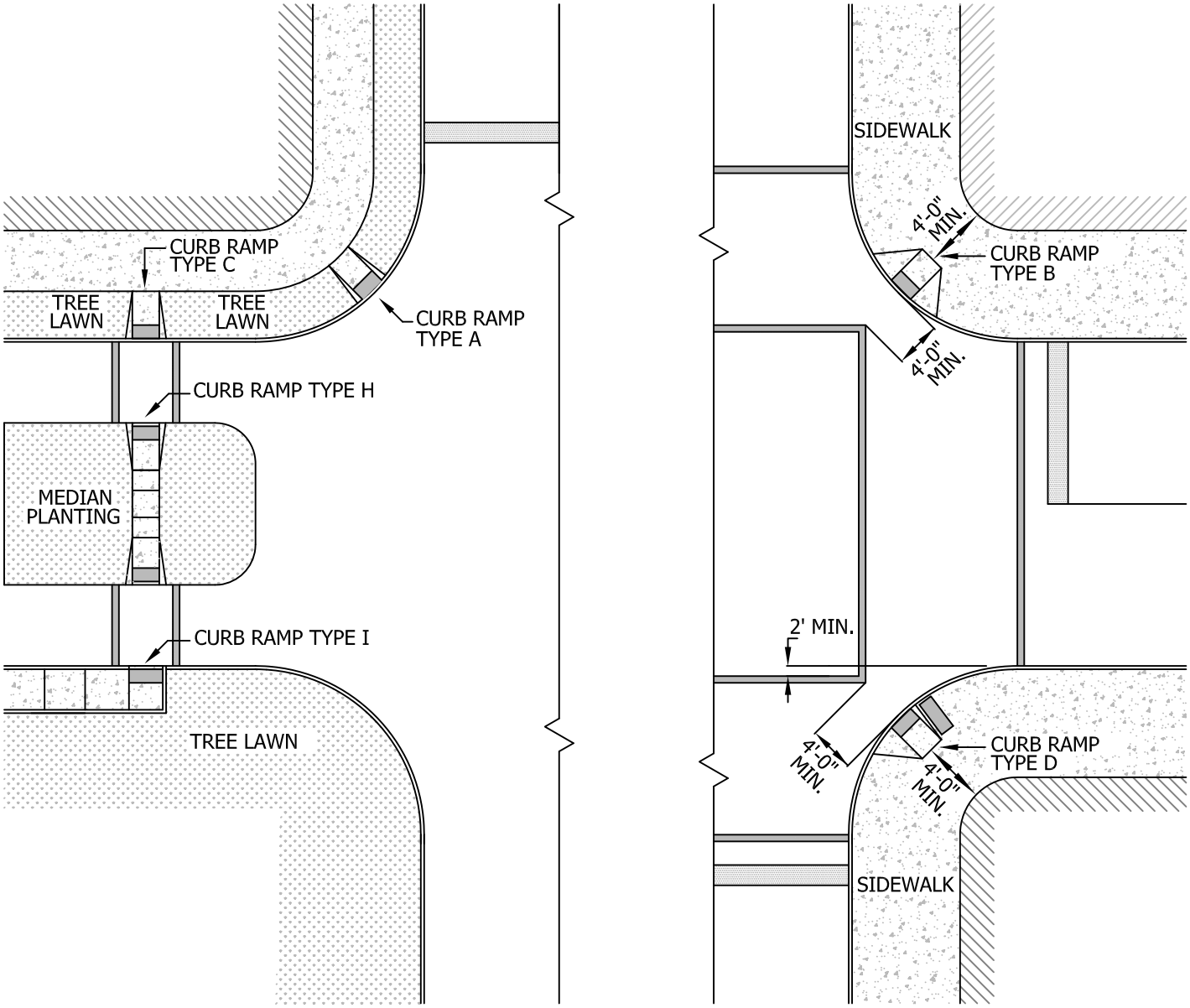

Date: 05/01/2014

City of Dublin
ENGINEERING

STANDARD DRAWING

TYPICAL LOCATION PLAN FOR SIDEWALK CURB RAMPS

SHEET 1 OF 1

DRAWING NO. **PD-01**

GENERAL NOTES, SIDEWALK CURB RAMPS

1. CURB RAMP COMPONENTS ASSEMBLY - THE CURB RAMP INCLUDES THE RAMPS, FLARED SIDES, LANDINGS AND ROLLED EDGES.

2. CURB RAMP TYPE - CURB RAMPS SHALL BE SPECIFIED BY THE APPROPRIATE TYPE AND SHALL BE PERPENDICULAR TO THE CURB EXCEPT TYPES E & F.

   TYPE A - DIAGONAL RAMP WITH FLARES IN TREE LAWN.
   TYPE B - DIAGONAL RAMP WITH FLARES.
   TYPE C - PERPENDICULAR RAMP IN TREE LAWN.
   TYPE D - PERPENDICULAR RAMP OBSTRUCTED ON ONE SIDE (WITH PRIOR WRITTEN CITY APPROVAL ONLY)
   TYPE E - RAMP WITH RECESSED LOWER LANDING FOR ALLEYS AND DRIVEWAYS (WITH TREE LAWN).
   TYPE F - RAMP WITH RECESSED LOWER LANDING FOR ALLEYS AND DRIVEWAYS (NO TREE LAWN).
   TYPE G - PARALLEL (OFF-STREET LANDING) WITH 2 TRANSITION RAMPS (WITH PRIOR WRITTEN CITY APPROVAL ONLY).
   TYPE H - MEDIAN RAMP WITH CENTER LANDING.
   TYPE I - COMBINED PERPENDICULAR AND PARALLEL RAMP ONE DIRECTION.

3. RAMP RUNNING SLOPE - THE RAMP RUNNING SLOPE SHALL BE 5% (1:20) TO 7.7% (1:13).

4. RAMP CROSS SLOPE - THE MAXIMUM CROSS SLOPE SHALL BE 1.56% (1:64, 3/16 INCH PER FOOT).

5. PERPENDICULAR RAMP WIDTH - THE MINIMUM WIDTH OF A SIDEWALK RAMP SHALL BE 4-FEET AND OF A BIKE PATH RAMP SHALL BE 8-FEET. THE WIDTH MAY BE REDUCED TO A MINIMUM OF 3-FEET WITH PRIOR WRITTEN CITY APPROVAL IF CLEARANCE RESTRICTIONS EXIST.

6. PARALLEL RAMP WIDTH - TYPE H RAMP SHALL BE A MINIMUM OF 4-FEET BY 5-FEET & 5-FEET BY 5-FEET RESPECTIVELY, PER STANDARD DRAWINGS.

7. ALL JOINTS BETWEEN NEW AND EXISTING MATERIALS SHALL BE FLUSH.

8. FLARES - THE LENGTH OF THE FLARE AT THE FACE OF CURB SHALL BE A MAXIMUM OF 10% OR 10 TIMES THE CURB HEIGHT, WHICHEVER IS LESS.

9. LANDINGS - LANDINGS SHALL BE A MINIMUM OF 4-FEET BY 4-FEET WITH A 1.56% (1:64) CROSS SLOPE FOR ALL CURB RAMP TYPES EXCEPT PARALLEL CURB RAMPS. OFF STREET LANDINGS FOR PARALLEL CURB RAMPS SHALL BE A MINIMUM OF 4-FEET BY 5-FEET AS INDICATED IN THE STANDARD DRAWINGS. LANDINGS ARE REQUIRED AS FOLLOWS:

   A. TOP LANDING - CURB RAMP TYPES A, B, C AND G SHALL HAVE LANDINGS AT THE TOP OF THE RAMP.

   B. LOWER RECESSED LANDING - CURB RAMP TYPE E AND F SHALL HAVE A RECESSED LANDING AT THE BOTTOM OF THE RAMP WHERE IT INTERSECTS THE CURB LINE.

   C. LANDING AT INTERSECTING SIDEWALKS - WHEREVER SIDEWALKS INTERSECT THERE SHALL BE A LANDING MEETING THE ABOVE REQUIREMENTS.

(GENERAL NOTES CONTINUED ON SHEET 2)

GENERAL NOTES, SIDEWALK CURB RAMPS (CONTINUED)

10. STREET COUNTER SLOPE - THE COUNTER SLOPE AT THE BASE OF THE RAMP SHALL BE A MAXIMUM OF 1:20 OR 5% FOR A MINIMUM OF 2-FEET.

11. MAXIMUM DIFFERENTIAL BETWEEN RAMP RUNNING SLOPE AND GUTTER PAN SHALL BE 13 %, THE PREFERRED DIFFERENTIAL IS 11%..

12. SURFACES - RAMP AND FLARE SURFACES MUST BE STABLE AND SLIP RESISTANT. RAMPS SHALL BE MEDIUM BROOMED TRANSVERSE TO THE DIRECTION OF TRAVEL. GRATINGS, VALVE BOXES, AND UTILITY BOXES SHALL NOT BE LOCATED IN THE RAMP, LANDING, OR TRANSITION AREAS.

13. DETECTABLE WARNINGS SHALL BE INSTALLED IN ACCORDANCE WITH CITY OF DUBLIN STANDARD DRAWING PD-03. DETCTABLE WARNINGS SHALL BE PROVIDED WHEREVER A CURB RAMP CROSSES A PUBLIC VEHICULAR WAY.

14. THE PEDESTRIAN WALKWAY WITHIN THE STREET PAVEMENT, AT LEAST 7-FEET WIDE, BETWEEN OPPOSING RAMPS SHALL HAVE A CROSS-SLOPE (THE LONGITUDINAL STREET SLOPE) OF NO GREATER THAN 2%. VERTICAL STREET CURVES SHALL BE INSTALLED AS NEEDED.

15. GRAVEL BEDDING SHALL HAVE A MINIMUM DEPTH OF 4 INCHES AND SHOULD NOT EXCEED A DEPTH OF 6 INCHES.

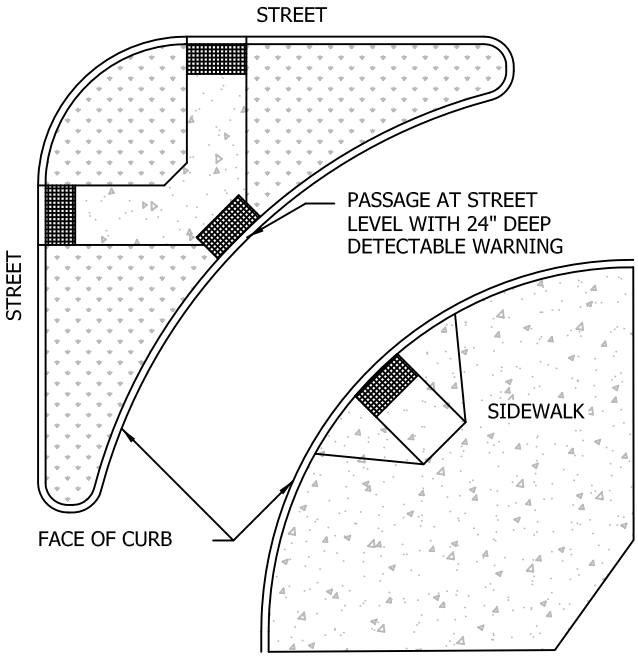

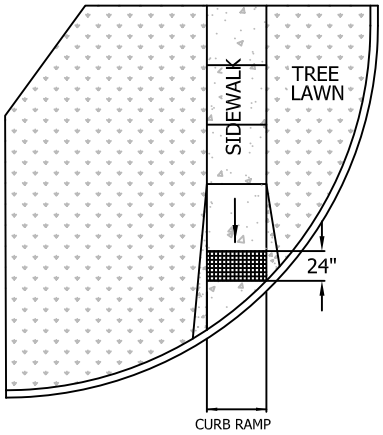

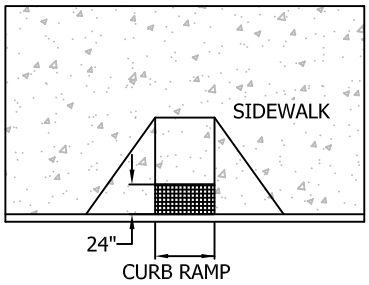

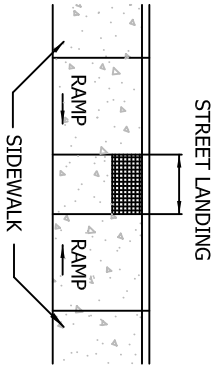

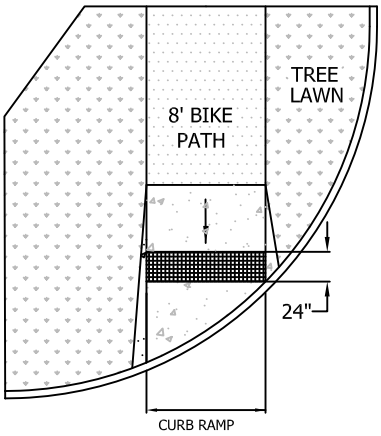

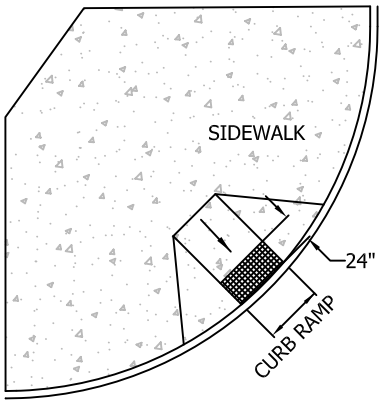

NOTES:

1. DETECTABLE WARNINGS SHALL BE PROVIDED WHEREVER A CURB RAMP CROSSES A VEHICULAR WAY EXCLUDING UNSIGNALIZED DRIVEWAY CROSSINGS.

2. DETECTABLE WARNINGS SHALL BE PROVIDED 24 INCHES IN THE DIRECTION OF TRAVEL AND EXTEND THE FULL WIDTH OF THE CURB RAMP OR FLUSH SURFACE. THE DETECTABLE WARNING SHALL BE LOCATED ADJACENT TO THE CURB LINE.

3. DETECTABLE WARNINGS SHALL BE PLACED 2" BEHIND THE BACK OF CURB.

4. DETECTABLE WARNINGS SHALL BE ADA SOLUTIONS, CAST IN PLACE REPLACEABLE TILE OR APPROVED EQUAL. BRICK RED IN COLOR FOR USE ON CONCRETE RAMPS AND BLACK IN COLOR FOR USE ON BRICK PAVER RAMPS.

Date: 05/01/2014

City of Dublin
ENGINEERING

STANDARD DRAWING

DETECTABLE WARNINGS

SHEET 1 OF 1

DRAWING NO. **PD-03**

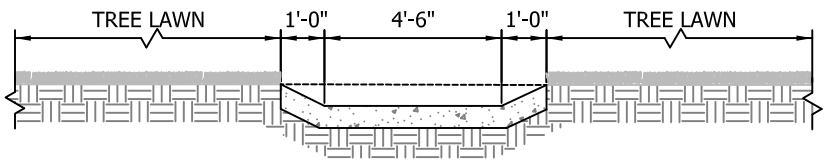

SECTION B-B

NOTE:
SEE STANDARD DRAWING PD-03 FOR DETECTABLE WARNINGS DETAILS

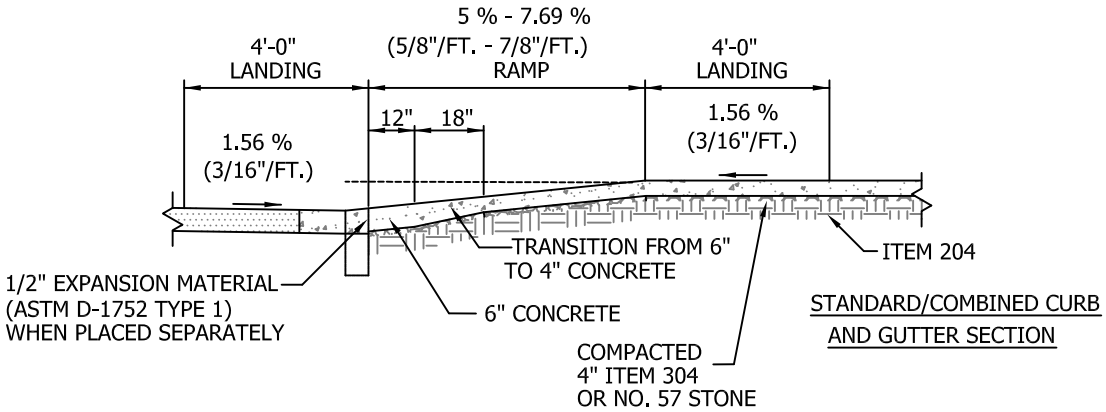

STANDARD/COMBINED CURB AND GUTTER SECTION

SECTION A-A

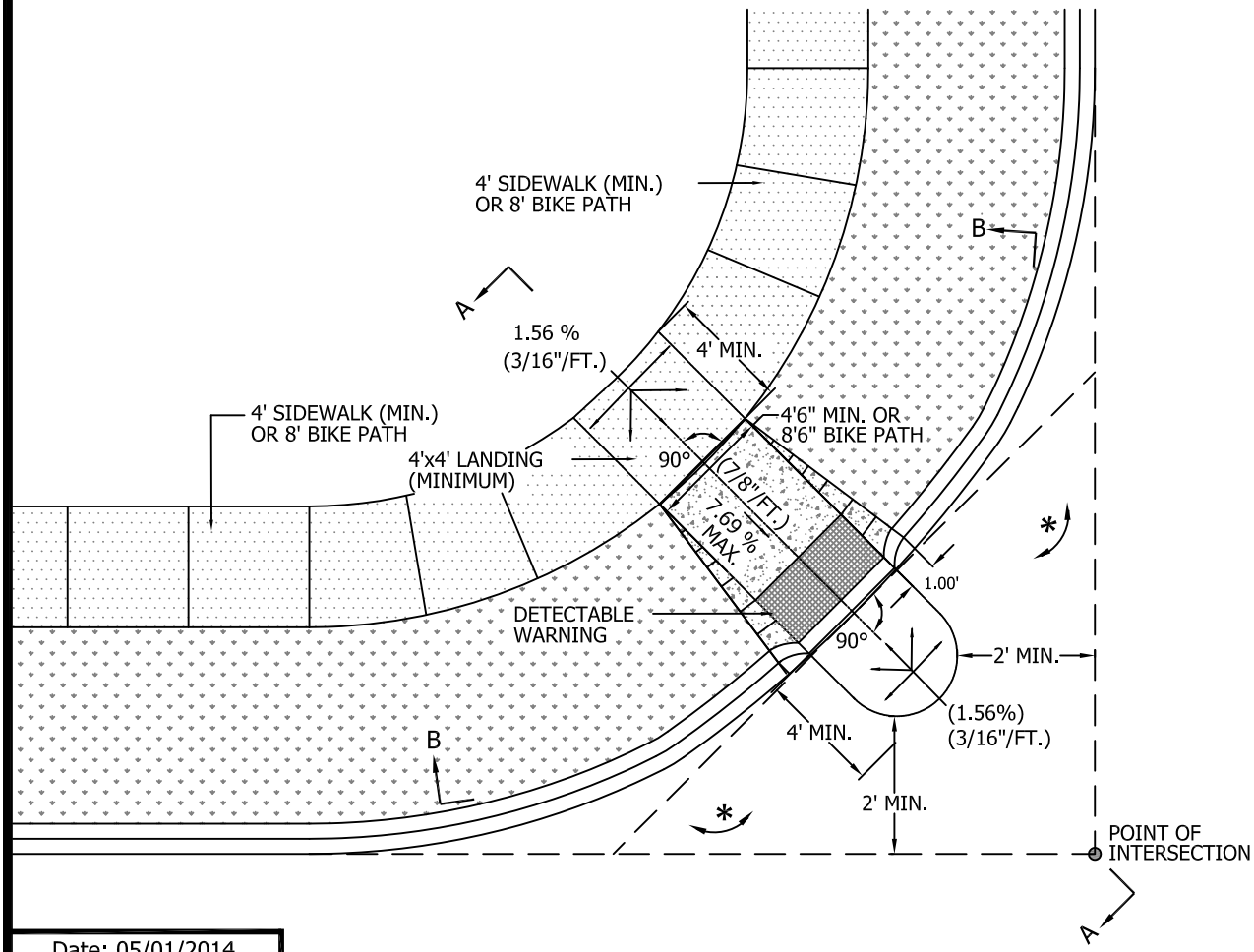

Date: 05/01/2014

City of Dublin
ENGINEERING

STANDARD DRAWING

CURB RAMP TYPE A DIAGONAL IN TREE LAWN

SHEET 1 OF 1

DRAWING NO. **PD-04**

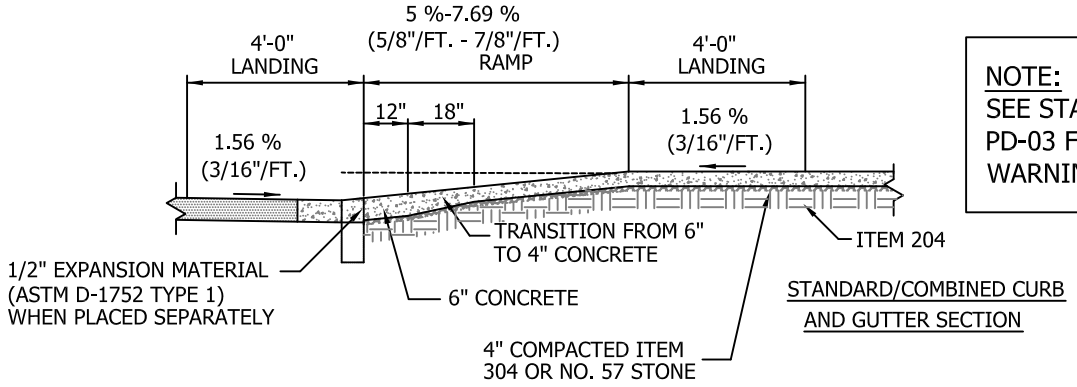

STANDARD/COMBINED CURB AND GUTTER SECTION

SECTION A-A

NOTE:
SEE STANDARD DRAWING PD-03 FOR DETECTABLE WARNINGS DETAILS

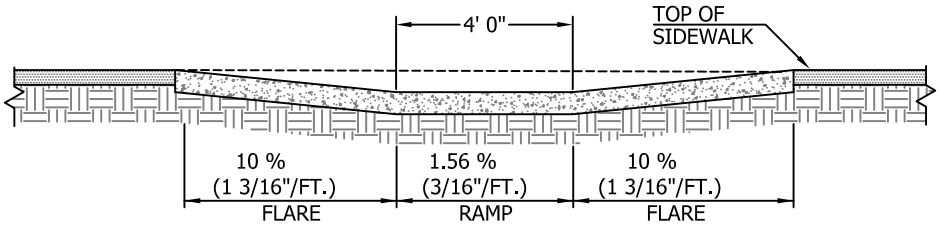

SECTION B-B

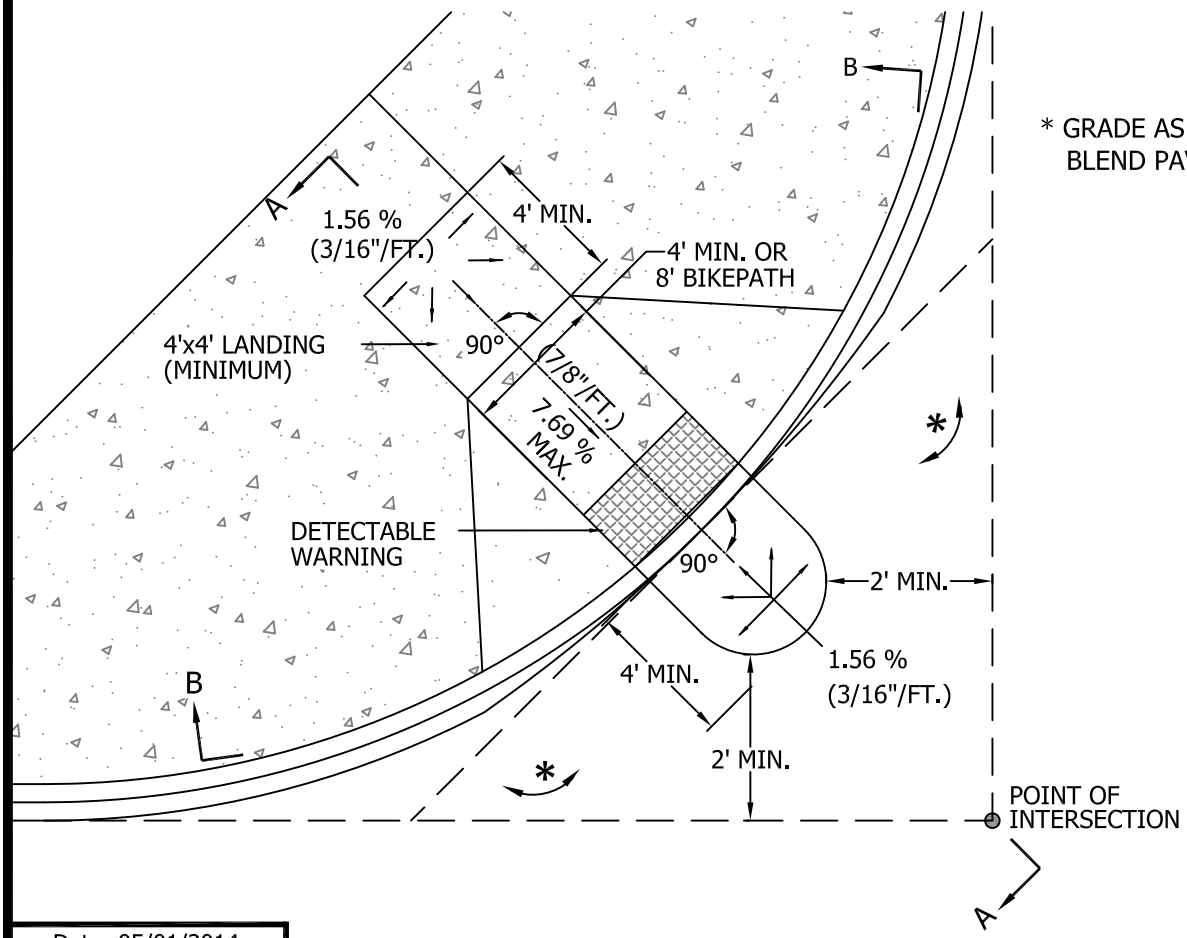

* GRADE AS REQUIRED TO BLEND PAVEMENT GRADES

Date: 05/01/2014

City of Dublin
ENGINEERING

STANDARD DRAWING

CURB RAMP TYPE B DIAGONAL WITH FLARES

SHEET 1 OF 1

DRAWING NO. **PD-05**

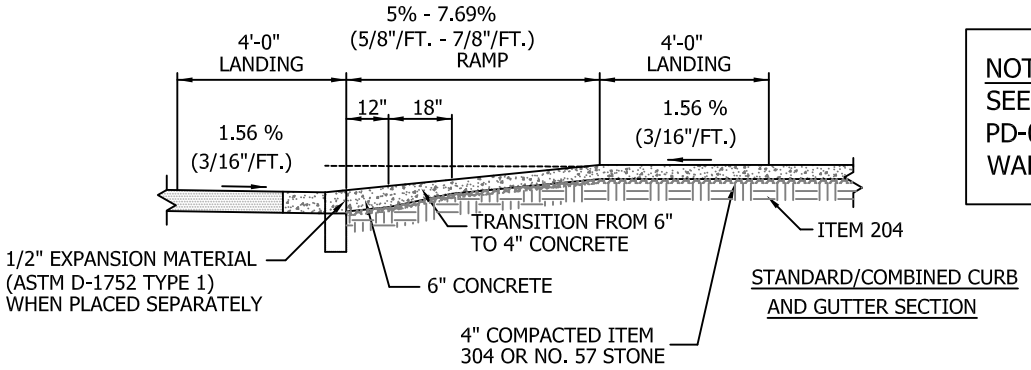

SECTION A-A

NOTE:
SEE STANDARD DRAWING PD-03 FOR DETECTABLE WARNINGS DETAILS

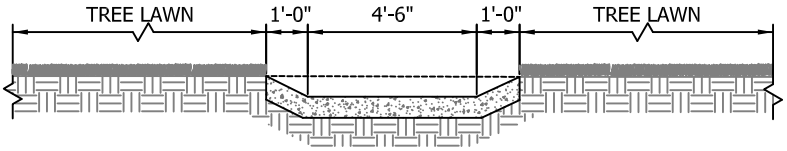

SECTION B-B

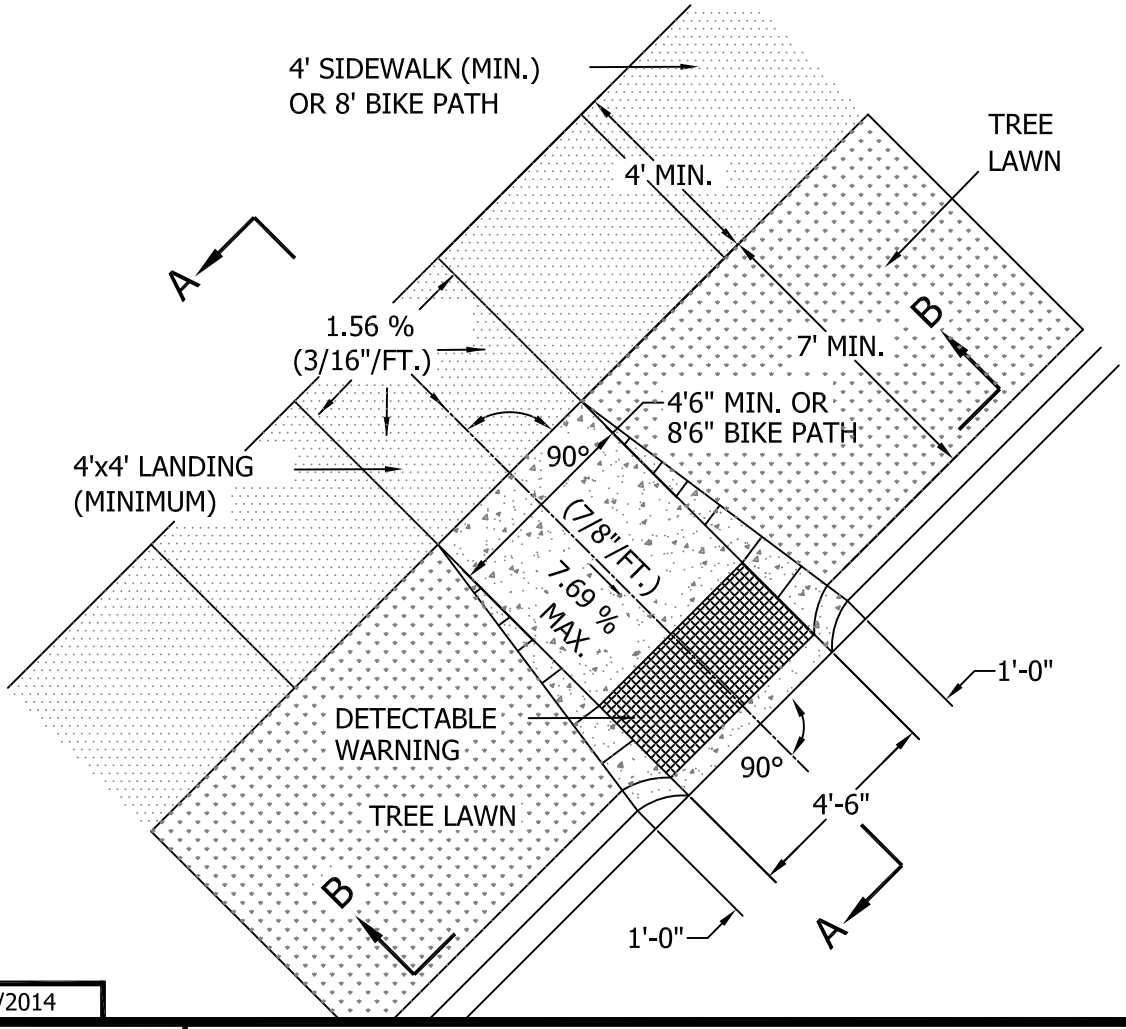

Date: 05/01/2014

City of Dublin
ENGINEERING

STANDARD DRAWING

CURB RAMP TYPE C IN TREE LAWN

SHEET 1 OF 1

DRAWING NO. **PD-06**

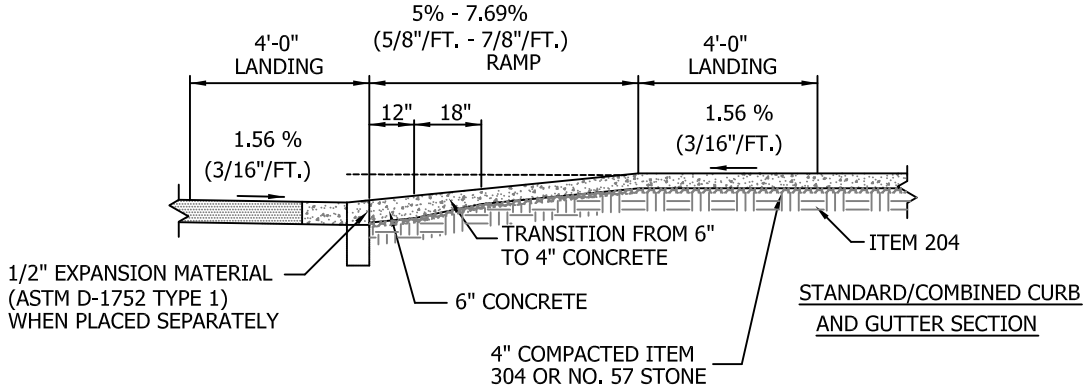

SECTION A-A

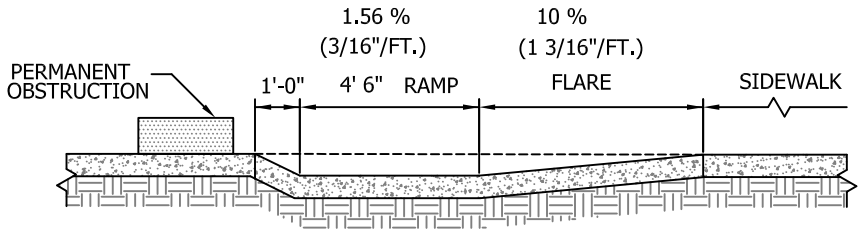

SECTION B-B

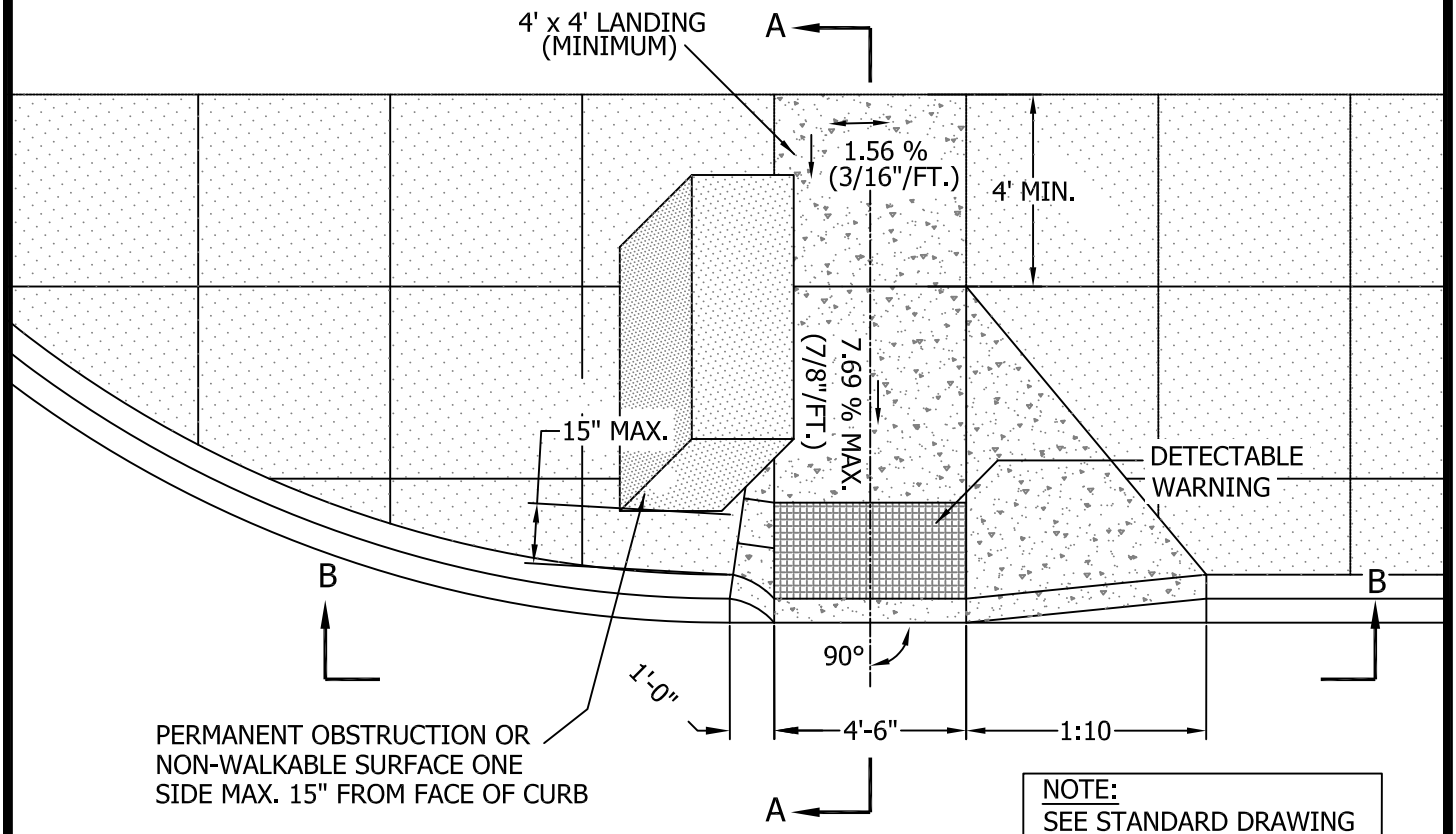

NOTE:
SEE STANDARD DRAWING PD-03 FOR DETECTABLE WARNINGS DETAILS

Date: 05/01/2014

City of Dublin
ENGINEERING

STANDARD DRAWING

CURB RAMP TYPE D OBSTRUCTED ONE SIDE

SHEET 1 OF 1

DRAWING NO. **PD-07**

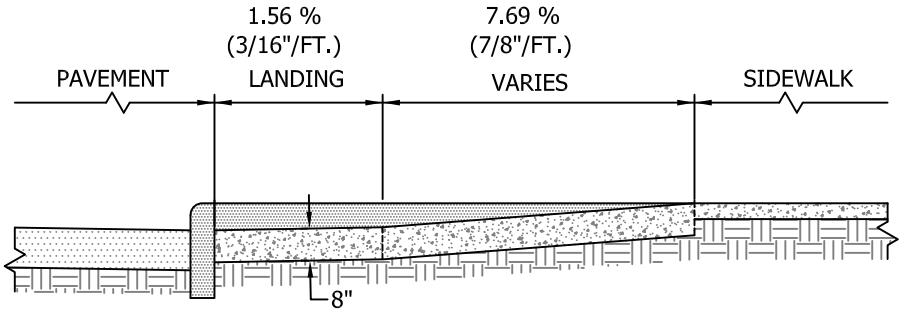

SECTION A-A

NOTE:
SEE STANDARD DRAWING PD-03 FOR DETECTABLE WARNINGS DETAILS

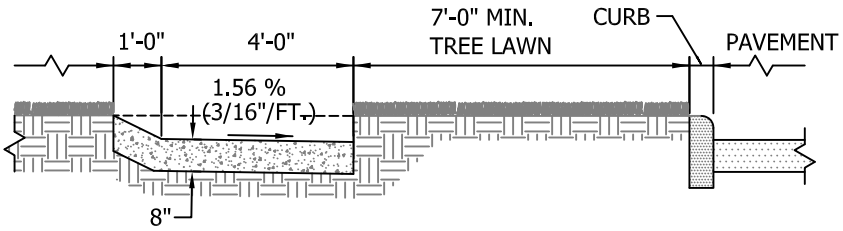

SECTION B-B

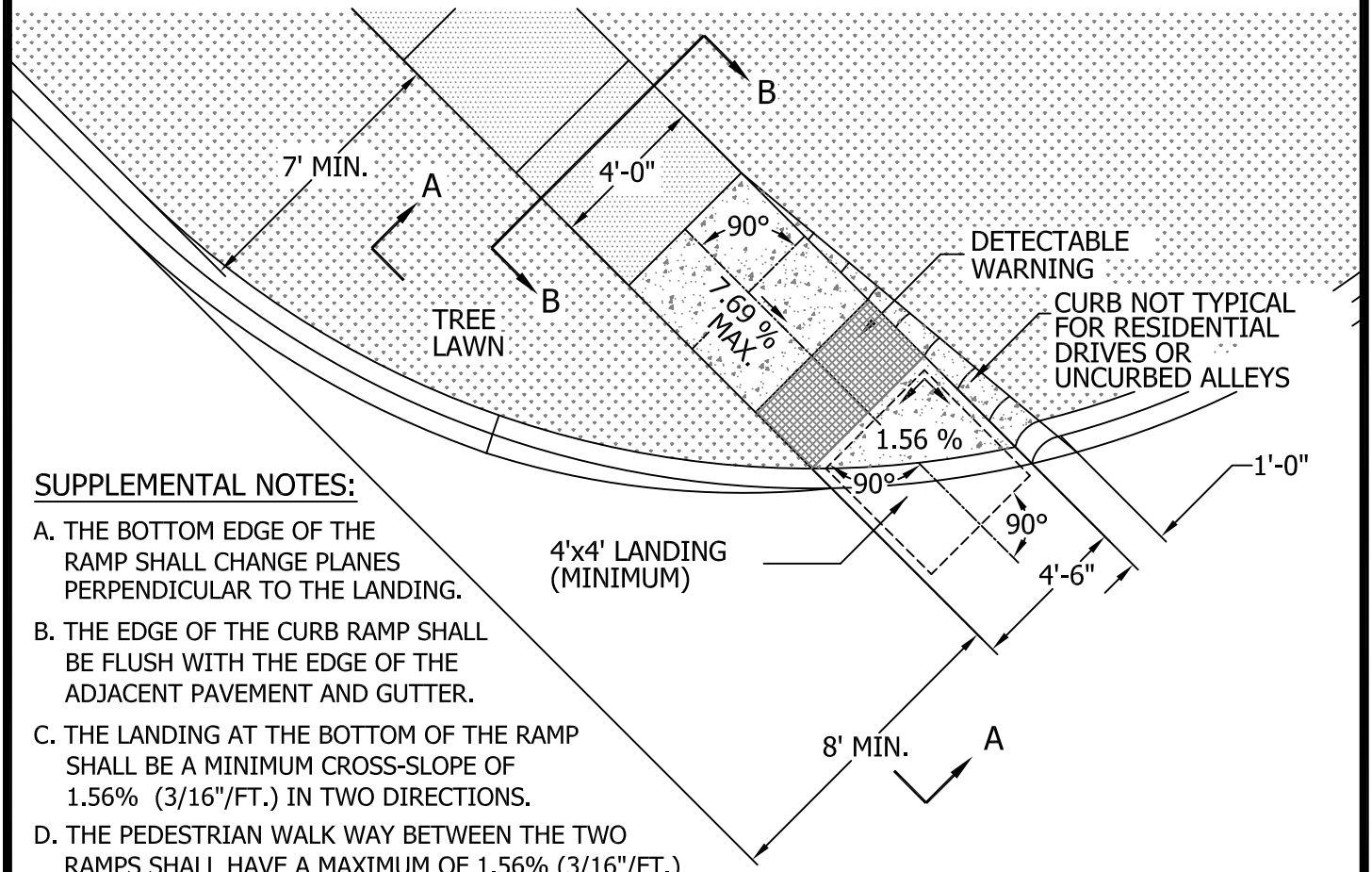

SUPPLEMENTAL NOTES:

A. THE BOTTOM EDGE OF THE RAMP SHALL CHANGE PLANES PERPENDICULAR TO THE LANDING.

B. THE EDGE OF THE CURB RAMP SHALL BE FLUSH WITH THE EDGE OF THE ADJACENT PAVEMENT AND GUTTER.

C. THE LANDING AT THE BOTTOM OF THE RAMP SHALL BE A MINIMUM CROSS-SLOPE OF 1.56% (3/16"/FT.) IN TWO DIRECTIONS.

D. THE PEDESTRIAN WALK WAY BETWEEN THE TWO RAMPS SHALL HAVE A MAXIMUM OF 1.56% (3/16"/FT.) CROSS-SLOPE WITH A 5% MAXIMUM RUNNING SLOPE (5/8"/FT.).

Date: 05/01/2014

City of Dublin
ENGINEERING

STANDARD DRAWING

CURB RAMP TYPE E ALLEYS AND DRIVEWAYS

SHEET 1 OF 1

DRAWING NO. ***PD-08***

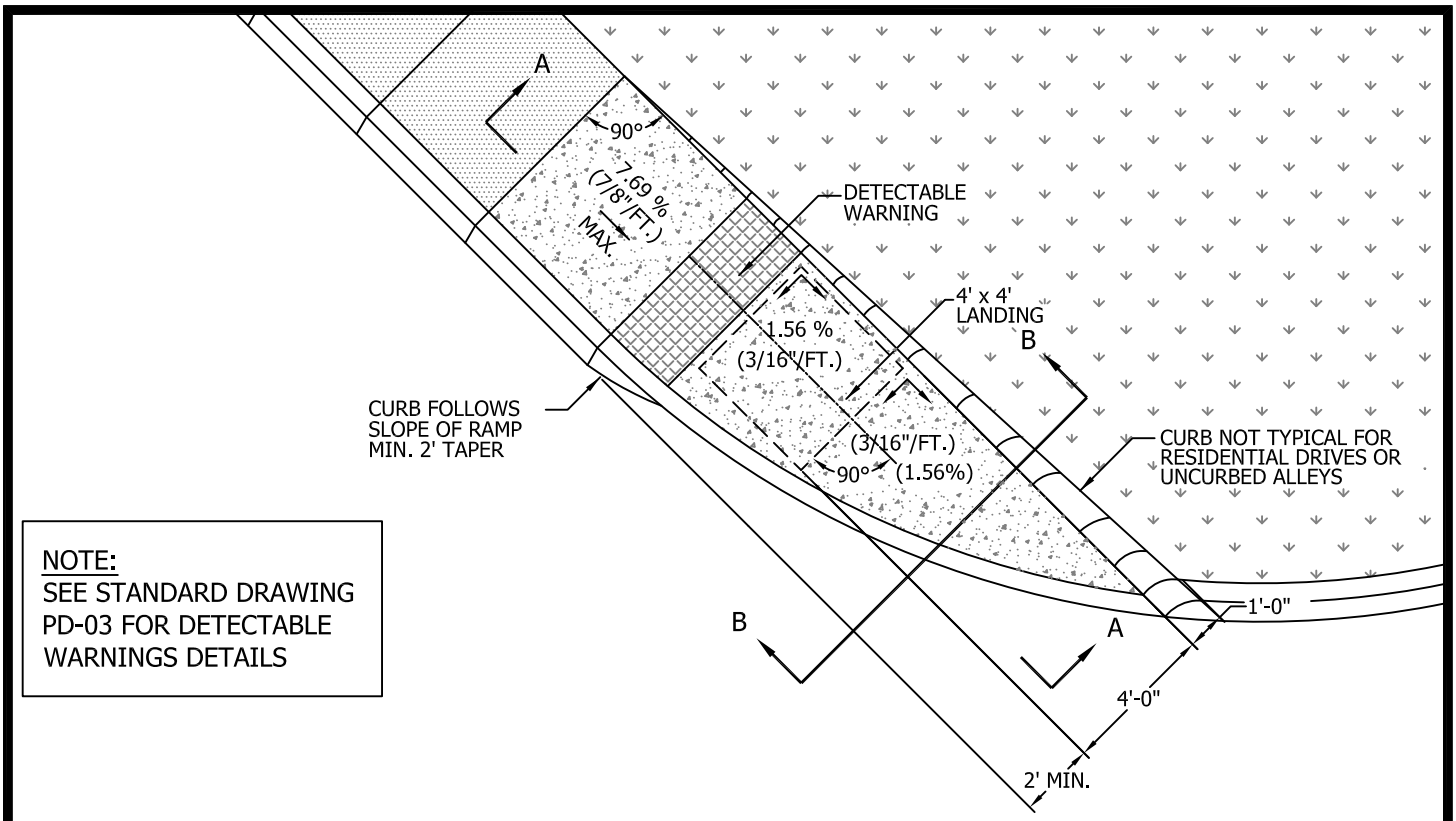

NOTE:
SEE STANDARD DRAWING PD-03 FOR DETECTABLE WARNINGS DETAILS

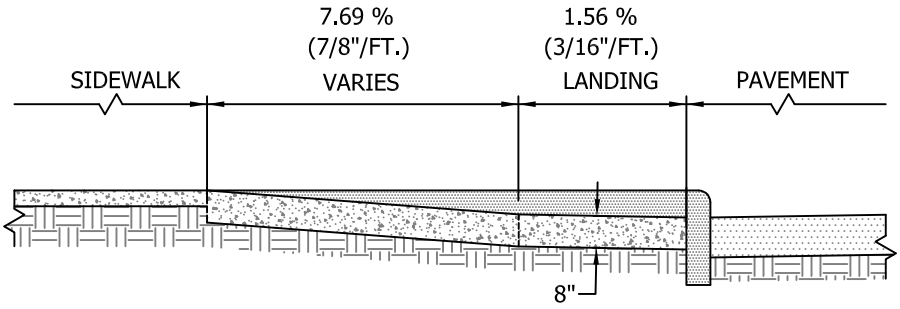

SECTION A-A

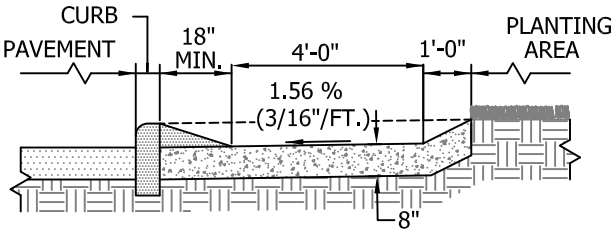

SECTION B-B

SUPPLEMENTAL NOTES:

A. THE BOTTOM EDGE OF THE RAMP SHALL CHANGE PLANES PERPENDICULAR TO THE LANDING.

B. THE EDGE OF THE CURB SHALL BE FLUSH WITH THE EDGE OF THE ADJACENT PAVEMENT AND GUTTER.

C. THE LANDING AT THE BOTTOM OF THE RAMP SHALL BE 4'X4' WITH A MAXIMUM CROSS SLOPE OF 1.56 % (3/16"/FT) IN TWO DIRECTIONS.

D. THE PEDESTRIAN WALK WAY BETWEEN THE TWO RAMPS SHALL HAVE A MAXIMUM OF 1.56 % (3/16"/FT.) CROSS - SLOPE WITH A 5 % (5/8"/FT.) MAXIMUM RUNNING SLOPE.

Date: 05/01/2014

City of Dublin
ENGINEERING

STANDARD DRAWING

CURB RAMP TYPE F ALLEY AND DRIVEWAYS

SHEET 1 OF 1

DRAWING NO. **PD-09**

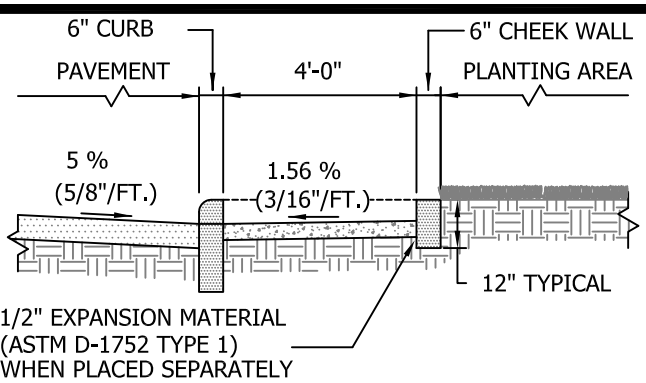

SECTION A-A

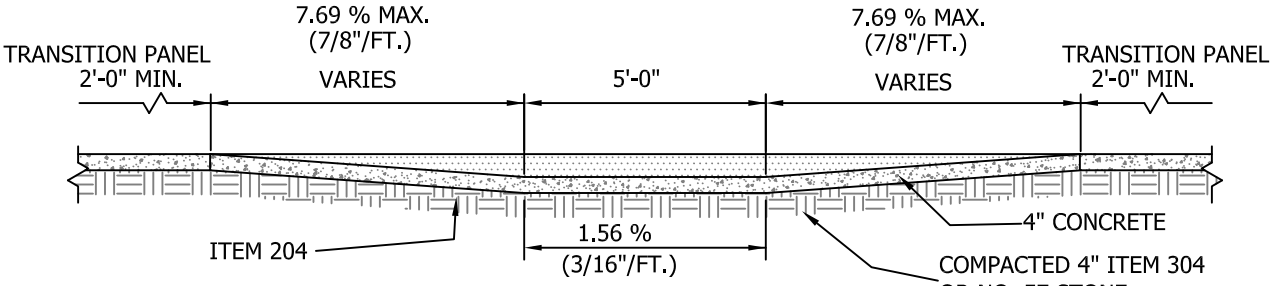

SECTION B-B

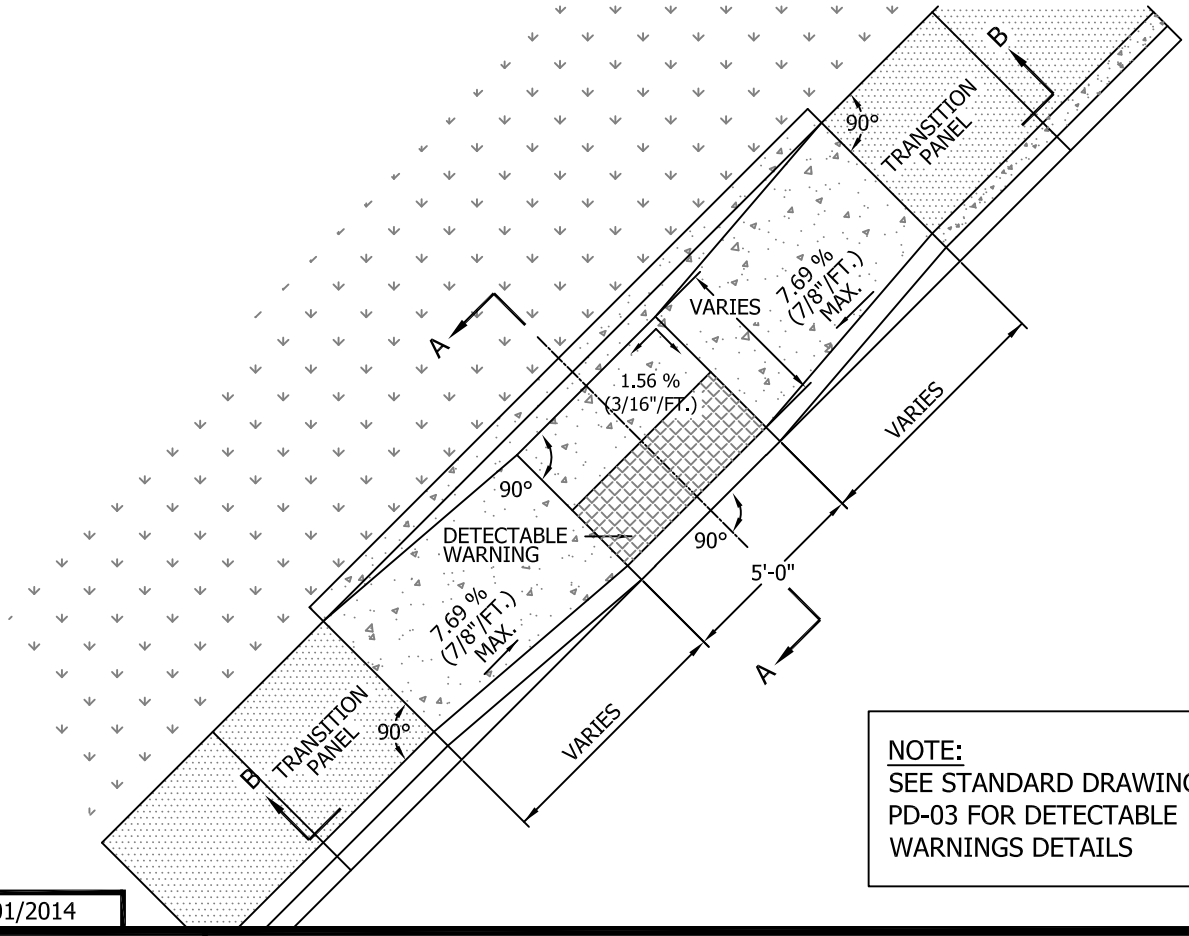

NOTE:
SEE STANDARD DRAWING PD-03 FOR DETECTABLE WARNINGS DETAILS

Date: 05/01/2014

City of Dublin
ENGINEERING

STANDARD DRAWING

CURB RAMP TYPE G PARALLEL LANDING, 2 RAMPS

SHEET 1 OF 1

DRAWING NO. **PD-10**

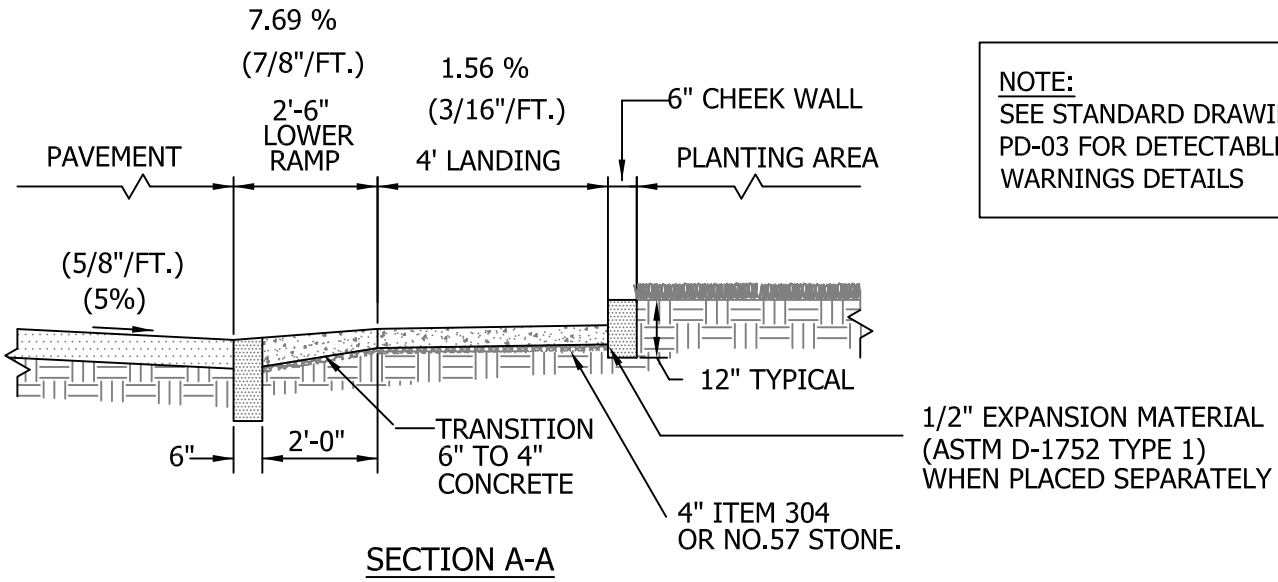

SECTION A-A

NOTE:
SEE STANDARD DRAWING PD-03 FOR DETECTABLE WARNINGS DETAILS

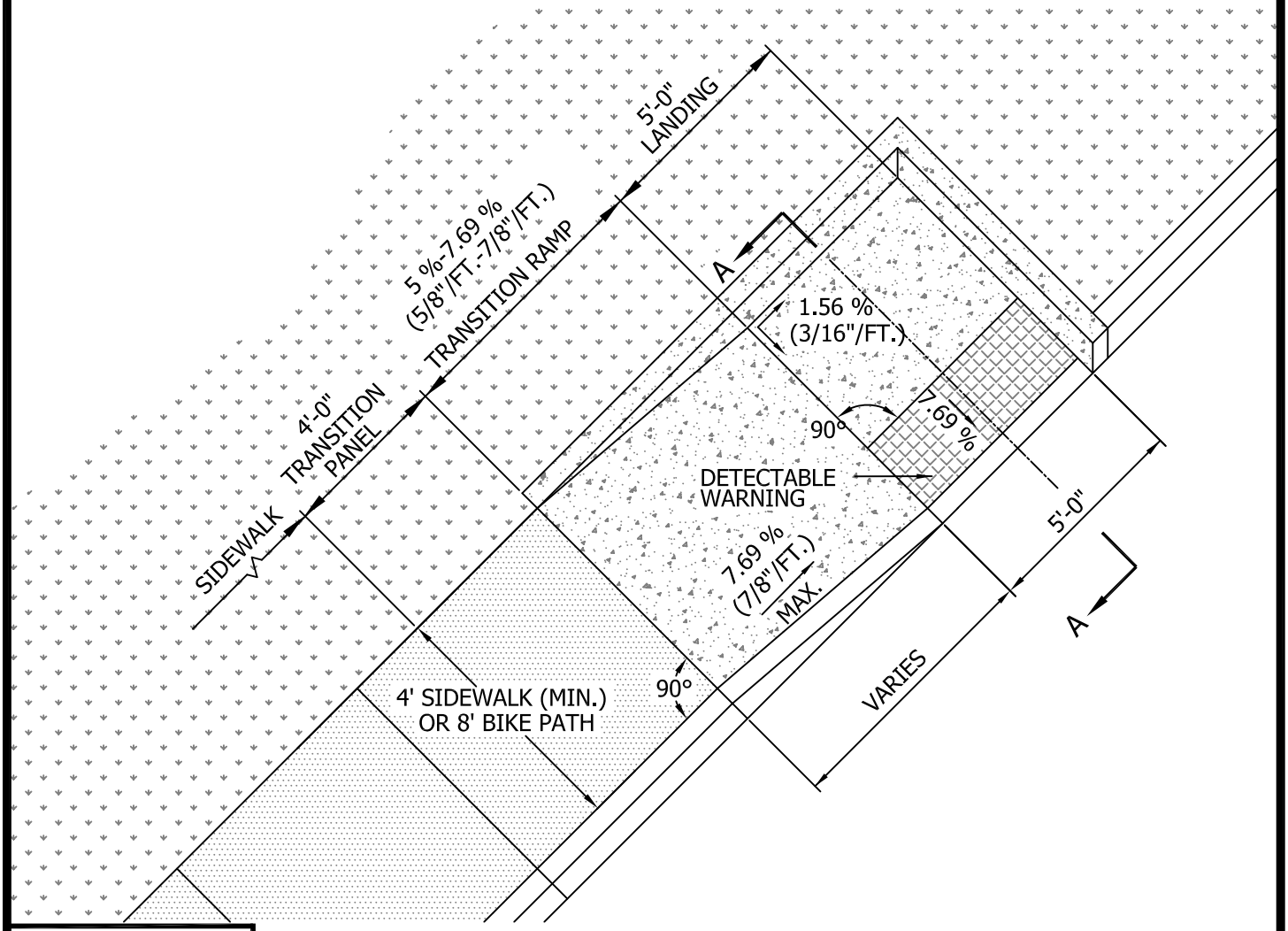

Date: 05/01/2014

City of Dublin
ENGINEERING

STANDARD DRAWING

CURB RAMP TYPE I PERPENDICULAR & PARALLEL

SHEET 1 OF 1

DRAWING NO. **PD-12**

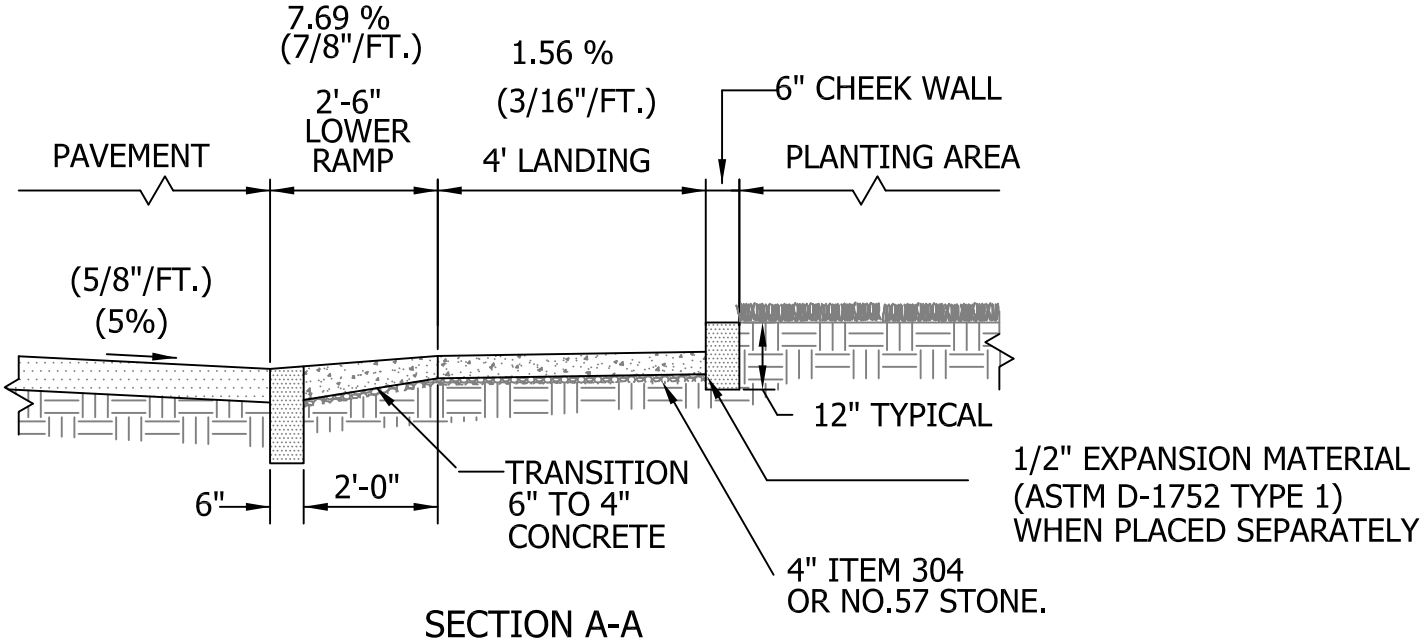

SECTION A-A

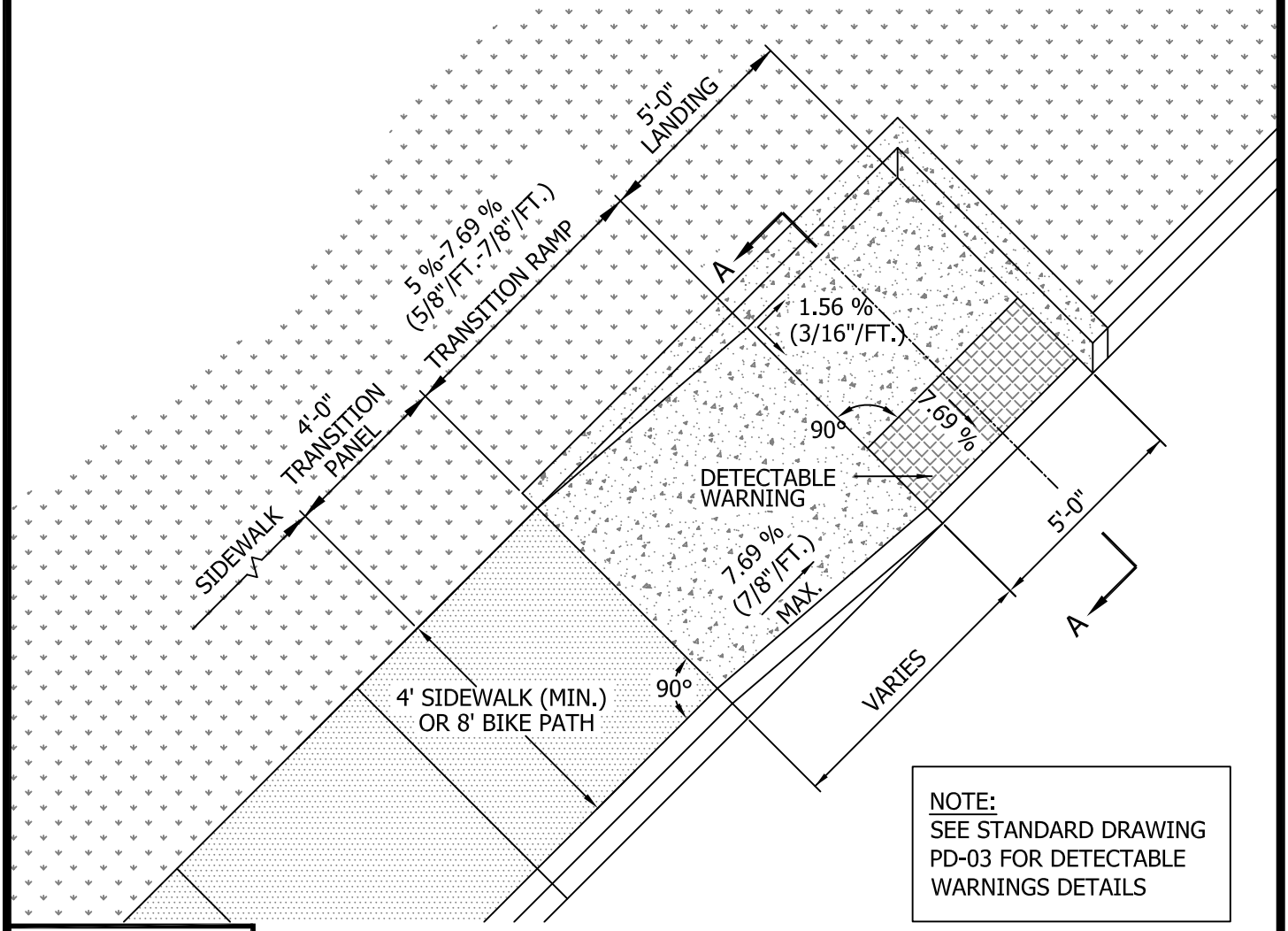

NOTE:
SEE STANDARD DRAWING PD-03 FOR DETECTABLE WARNINGS DETAILS

Date: 05/01/2014

City of Dublin
ENGINEERING

STANDARD DRAWING

CURB RAMP TYPE I PERPENDICULAR & PARALLEL

SHEET 1 OF 1

DRAWING NO. **PD-12**

NOTE: SEE RD-02 FOR CURB & GUTTER DETAIL

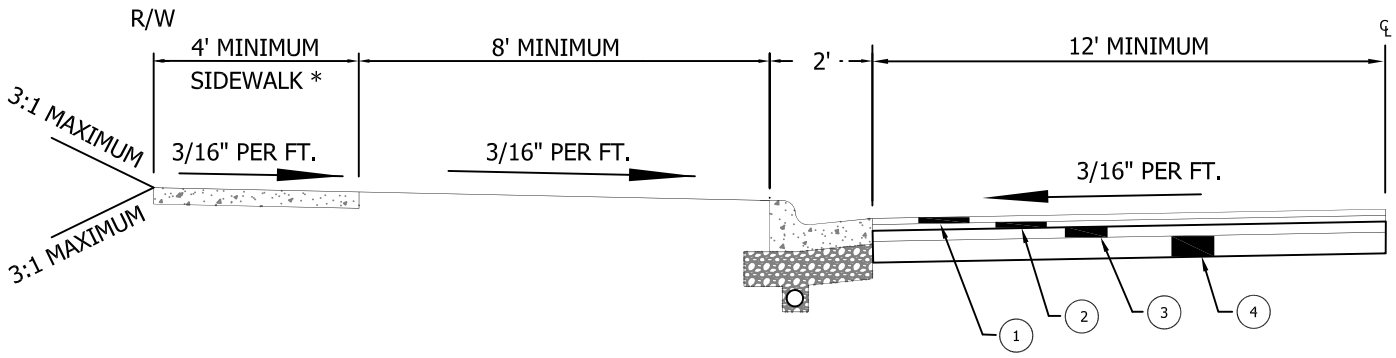

* 5'-0" SIDEWALK (WHERE REQUIRED)
8'-0" BIKE PATH (WHERE REQUIRED)

MINOR AND LOCAL STREETS	(MINIMUM PAVEMENT DEPTH*)	ALTERNATIVE ***
(1) ASPHALT CONCRETE SURFACE COURSE TYPE 1 PG. 64-22 MEDIUM TRAFFIC ITEM 448 ----	1 1/4"	1 1/4"
(2) ASPHALT CONCRETE INTERMEDIATE COURSE TYPE 2 PG. 64-22 MEDIUM TRAFFIC ITEM 448-----	1 3/4"	1 3/4"
(3) BITUMINOUS AGGREGATE BASE ITEM 301 ---- (TWO COURSES OF 3")	3"	6"
(4) AGGREGATE BASE ITEM 304 ----------	6"	N/A

* NOTE: MINIMUM PAVEMENT DEPTH ARE TYPICAL FOR RESIDENTIAL APPLICATIONS. ROADWAYS IN INDUSTRIAL AND COMMERCIAL AREAS MAY BE REQUIRED TO HAVE DEPTHS DESIGNED FOR ACTUAL TRAFFIC LOADINGS USING AASHTO METHODS AS DIRECTED BY THE CITY ENGINEER.

COLLECTOR AND ARTERIAL STREETS **	(MINIMUM PAVEMENT DEPTH*)	ALTERNATIVE ***
(1) ASPHALT CONCRETE SURFACE COURSE TYPE 1 PG. 64-22 MEDIUM TRAFFIC ITEM 448 ----	1 1/4"	1 1/4"
(2) ASPHALT CONCRETE INTERMEDIATE COURSE TYPE 2 PG. 64-22 MEDIUM TRAFFIC ITEM 448-----	1 3/4"	1 3/4"
(3) BITUMINOUS AGGREGATE BASE ITEM 301 ---- (TWO COURSES OF 3")	6"	9"
(4) AGGREGATE BASE ITEM 304 ----------	6"	N/A

** NOTE: COLLECTOR AND ARTERIAL STREET PAVEMENT DEPTHS SHALL BE DESIGNED TO ACTUAL TRAFFIC LOADINGS USING THE AASHTO GUIDE FOR DESIGN OF PAVEMENT STRUCTURES. SHOULD CALCULATED DEPTHS BE LESS THAN THE MINIMUM DEPTHS, THE MINIMUM DEPTHS SHALL BE USED.

*** NOTE: ALTERNATIVE PAVEMENT SECTION REQUIRES CITY ENGINEER'S APPROVAL PRIOR TO INSTALLATION.

Date: 05/01/2014

City of Dublin
ENGINEERING

STANDARD DRAWING

TYPICAL STREET SECTIONS

SHEET 1 OF 1

DRAWING NO. **RD-01**

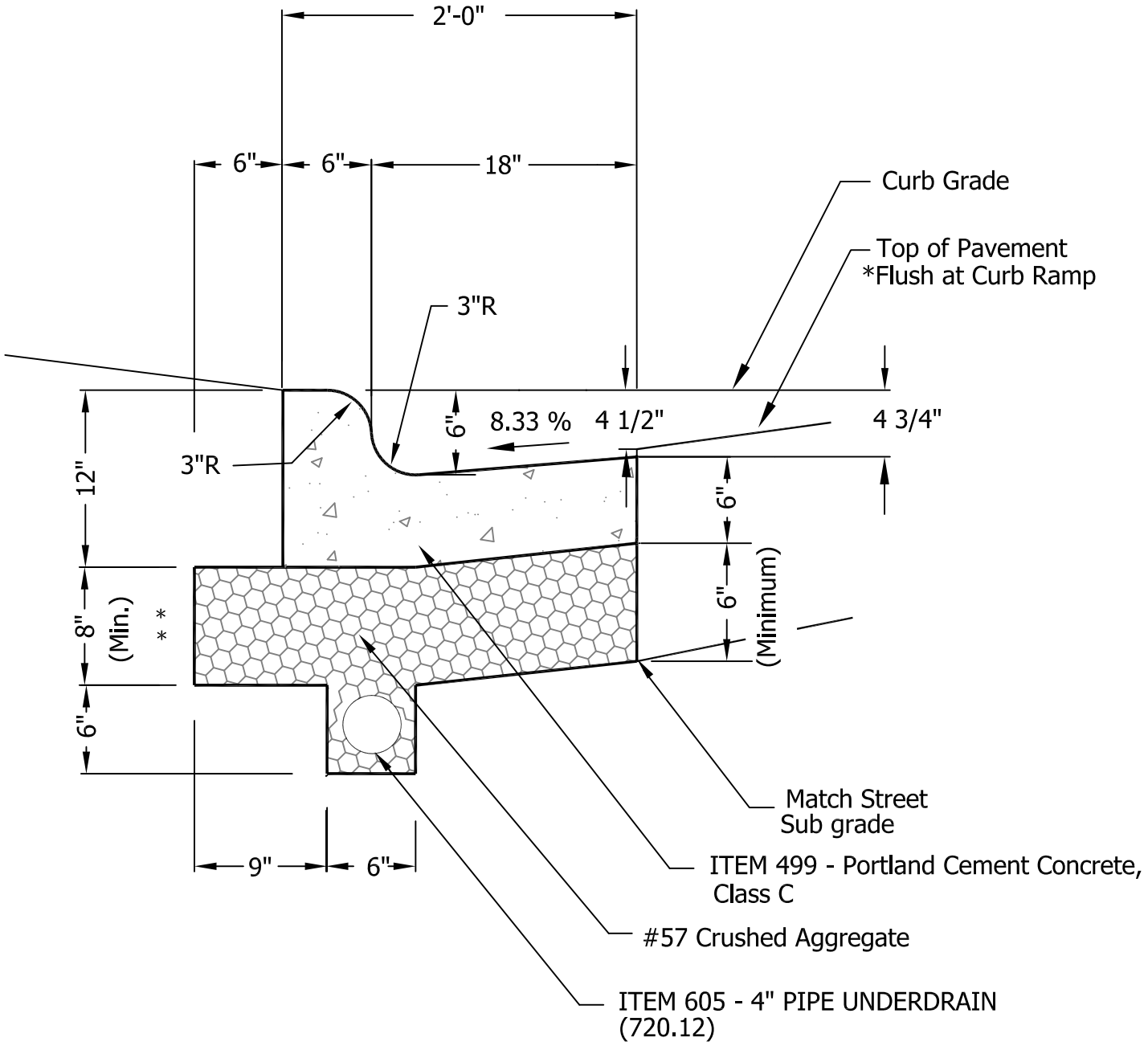

* SEE DRAWING RD-03 FOR GUTTER TRANSITION AT CURB RAMP.

** 10" AT COMMERCIAL DRIVE ENTRANCES.

Date: 05/01/2014

City of Dublin
ENGINEERING

STANDARD DRAWING

COMBINATION CONCRETE CURB AND GUTTER

SHEET 1 OF 1

DRAWING NO. ***RD-02***

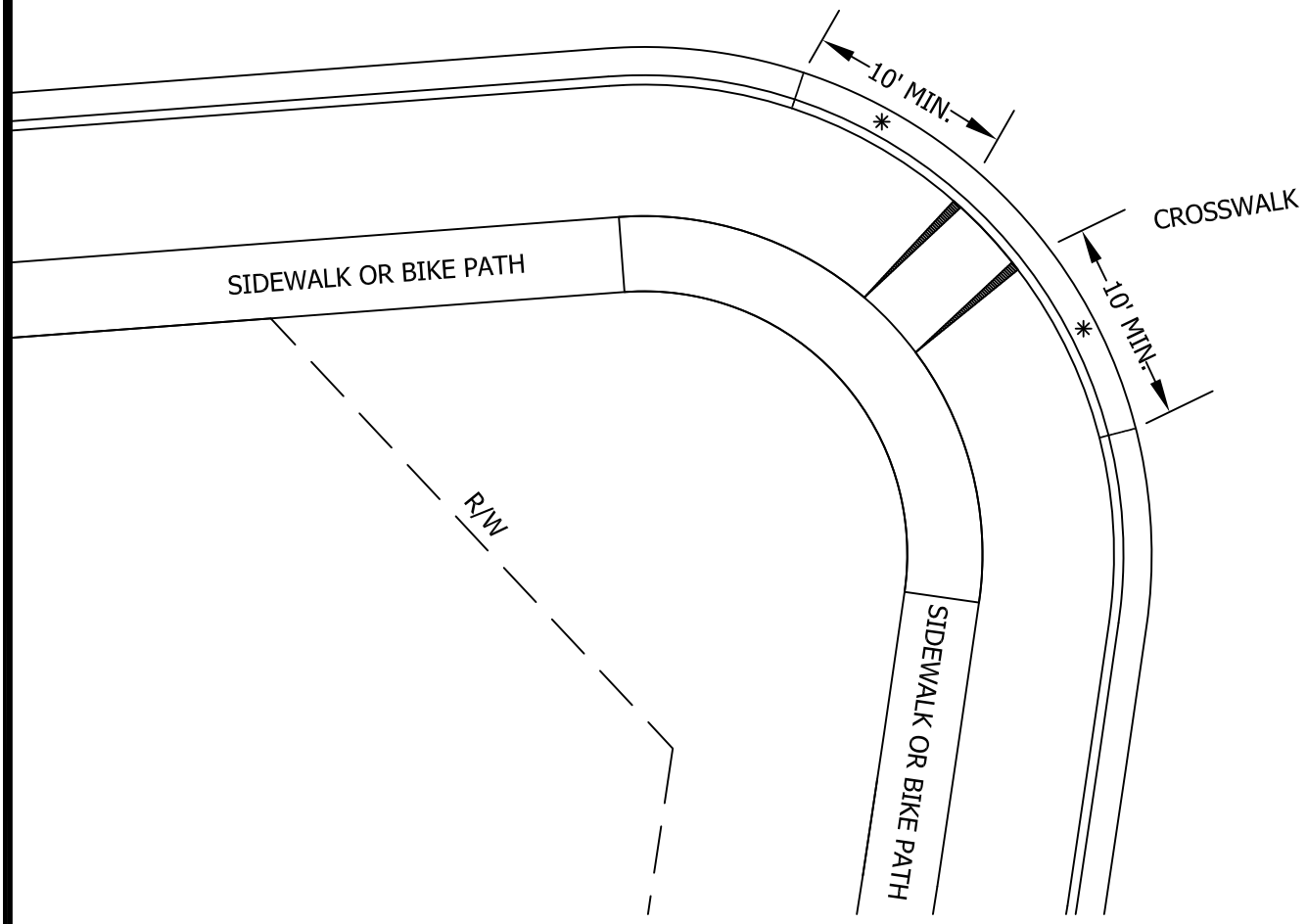

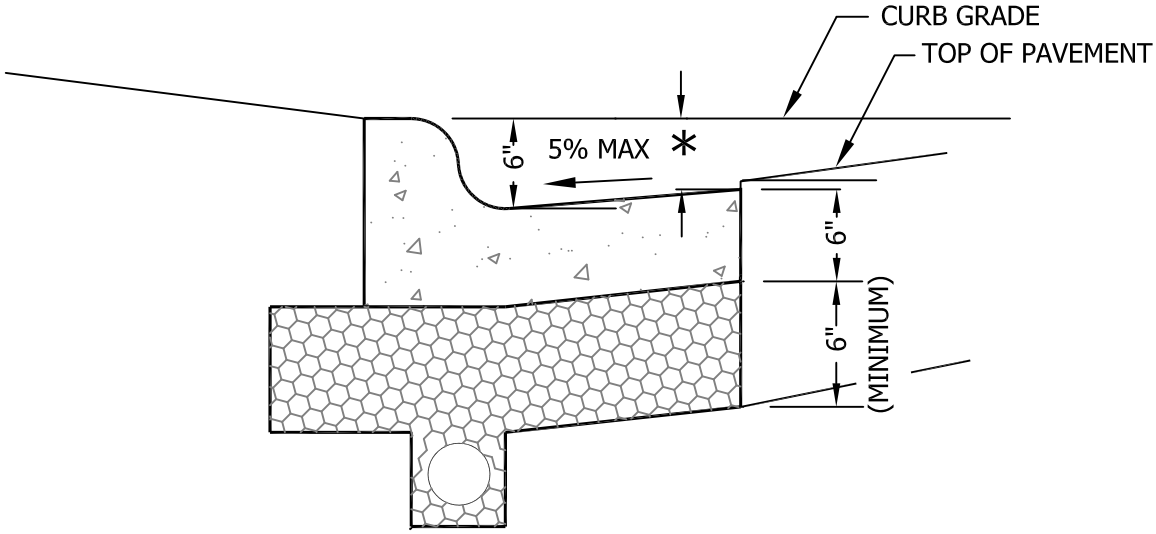

* TRANSITION GUTTER LIP FROM 4 1/2"-INCH TYPICAL DEPTH TO 5 5/8-INCH DEPTH WITHIN AT LEAST 10-FEET OF THE CURB RAMP. THE 5 5/8-INCH DEPTH IS TO BE MAINTAINED THROUGH THE CURB RAMP. THE TRANSITION LENGTH MAY BE ADJUSTED PER THE DIRECTION OF THE CITY ENGINEER.

Date: 05/01/2014

City of Dublin
ENGINEERING

STANDARD DRAWING

TYPICAL GUTTER SECTION TRANSITIONS

SHEET 1 OF 1

DRAWING NO. ***RD-03***

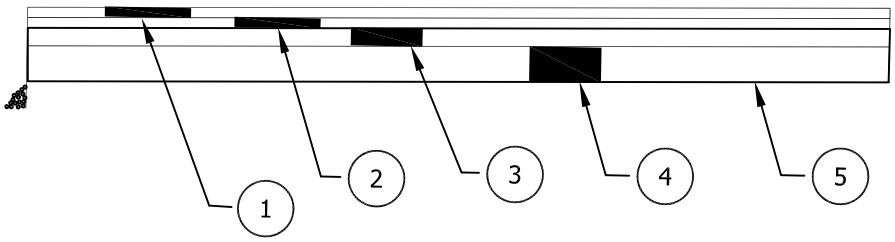

✱ PRIVATE STREET OR ALLEY (MINIMUM PAVEMENT DEPTH)

Option 1

1. ASPHALT CONCRETE SURFACE COURSE TYPE 1 PG. 64-22 MEDIUM TRAFFIC ITEM 448 --------1 1/4"
2. ASPHALT CONCRETE INTERMEDIATE COURSE TYPE 2 PG. 64-22 MEDIUM TRAFFIC ITEM 448 --------1 3/4"
3. BITUMINOUS AGGREGATE BASE ITEM 301 --- 3"
4. AGGREGATE BASE ITEM 304 ----------6"
5. SUBGRADE COMPACTION ITEM 204

PARKING LOT (MINIMUM PAVEMENT DEPTH)

Option 1

1. ASPHALT CONCRETE SURFACE COURSE TYPE 1 PG. 64-22 MEDIUM TRAFFIC ITEM 448 --------1 1/4"
2. ASPHALT CONCRETE INTERMEDIATE COURSE TYPE 2 PG. 64-22 MEDIUM TRAFFIC ITEM 448 --------1 3/4"
4. AGGREGATE BASE ITEM 304 ----------6"
5. SUBGRADE COMPACTION ITEM 204

ROADWAYS IN INDUSTRIAL AND COMMERCIAL AREAS MAY BE REQUIRED TO HAVE DEPTHS DESIGNED FOR PROJECTED TRAFFIC LOADINGS USING AASHTO METHODS AS DIRECTED BY THE CITY ENGINEER.

✱ NOTE: MINIMUM PAVEMENT WIDTH FOR PRIVATE STREETS SHALL BE 22'.

Date: 05/01/2014

City of Dublin
ENGINEERING

STANDARD DRAWING

TYPICAL PAVEMENT SECTION FOR PRIVATE STREETS

SHEET 1 OF 1

DRAWING NO. **RD-04**

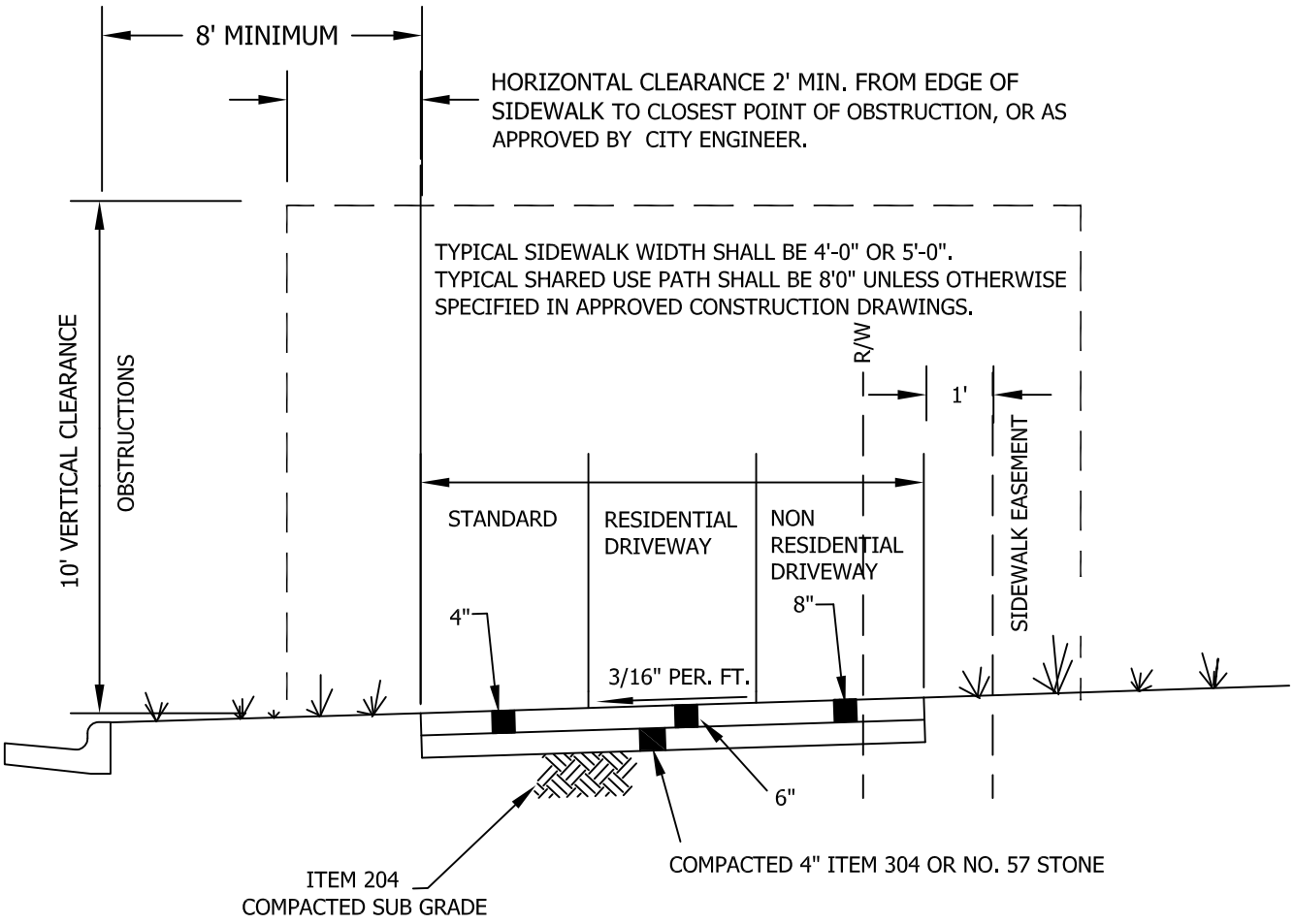

1. ALL WALKWAYS SHALL BE CONSTRUCTED PER CCMS ITEM 608 OR AS DIRECTED BY CITY ENGINEER.
2. ALL DISTURBED AREAS SHALL BE SEEDED AND MULCHED. SEED MIXTURE SHALL BE APPROVED BY THE CITY ENGINEER.
3. CITY OF COLUMBUS CONSTRUCTION AND MATERIAL SPECIFICATIONS, CURRENT EDITIONS, AND ANY OTHER SUPPLEMENTS THERETO, SHALL GOVERN ALL CONSTRUCTION ITEMS UNLESS OTHERWISE NOTED.
4. SIDEWALKS/BIKE PATHS CROSSING RESIDENTIAL DRIVEWAYS SHALL BE 6" CLASS C CONCRETE ITEM 499. SIDEWALKSSHARED USE PATHS CROSSING NON-RESIDENTIAL DRIVEWAY APPROACHES SHALL BE MINIMUM 8" CLASS C CONCRETE,ITEM 499 UNLESS OTHERWISE APPROVED BY THE CITY ENGINEER.
5. ALL COMMERCIAL DRIVES SHALL HAVE 6" OF ITEM 304.
6. INSPECTION SCHEDULING SHALL BE MADE WITH THE BUILDING DIVISION WHEN CONCRETE FORMS ARE READY FOR INSPECTION, AT LEAST 48 HOURS BEFORE CONCRETE IS TO BE PLACED AT (614) 410-4600.
7. ALL SHARED USE PATH JOINTS ARE TO BE SAWCUT.
8. SIDEWALKS/FLATWORK SHALL BE TOOL CUT & RETRACED.
9. FULL DEPTH EXPANSION MATERIAL (1/2" THICK) SHALL BE PLACED ADJOINING ALL EXISTING CONCRETE CONFORMING TO ASTM D-1752 TYPE 1.

Date: 05/01/2014

City of Dublin
ENGINEERING

STANDARD DRAWING

CONCRETE SIDEWALK AND SHARED USE PATH

SHEET 1 OF 1

DRAWING NO. **RD-05**

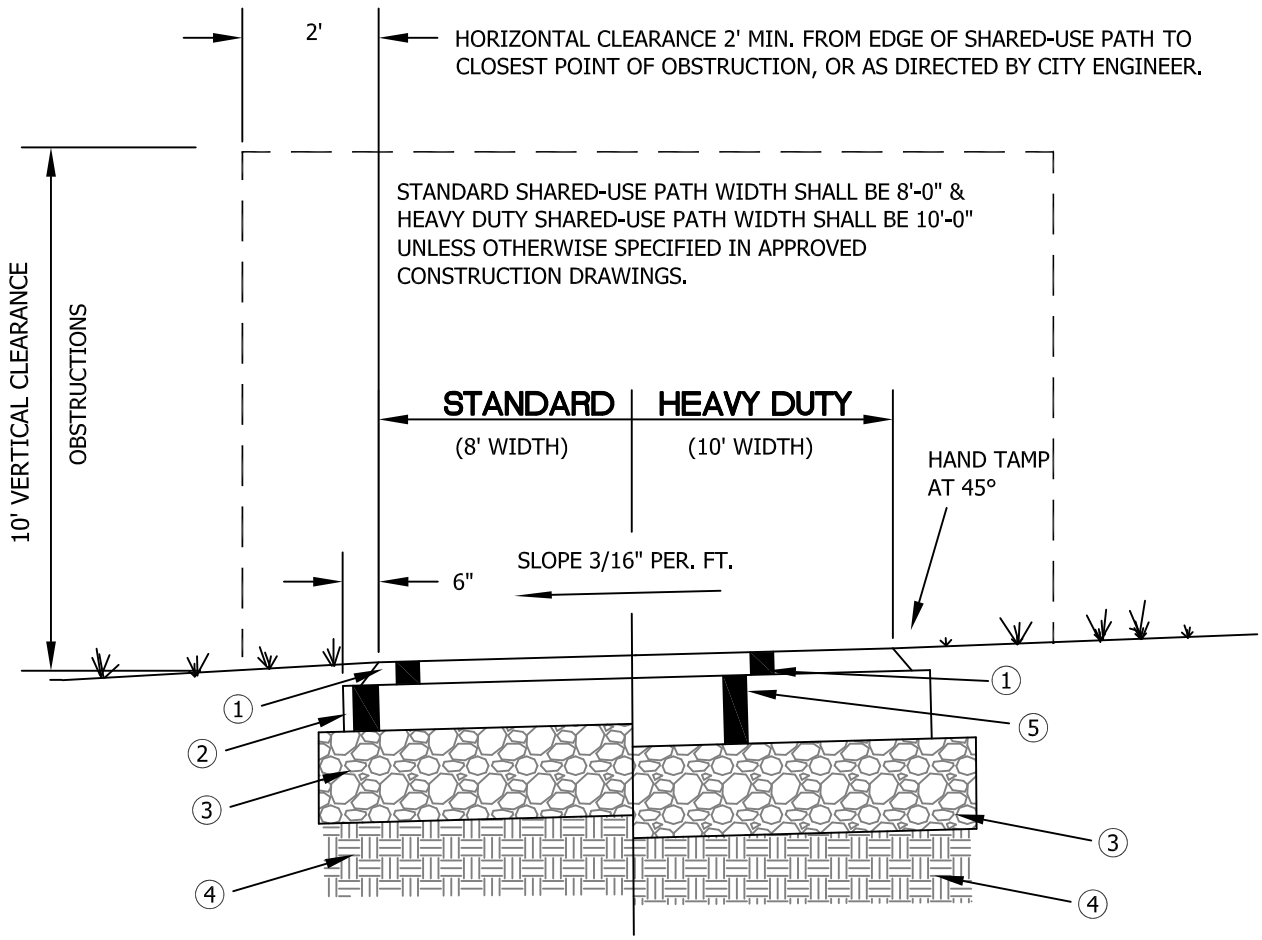

1. 1-1/2" ITEM 448, ASPHALT CONCRETE, SURFACE COURSE TYPE 1 (MEDIUM TRAFFIC), PG. 64-22
2. 3" ITEM 301, ASPHALT CONCRETE BASE
3. 6" ITEM 304, AGGREGATE BASE
4. ITEM 204, SUBGRADE COMPACTION
5. 4 1/2" ITEM 301, ASPHALT CONCRETE BASE

1. ALL TOPSOIL SHALL BE REMOVED FROM SUB GRADE AREAS. ITEM 204 SHALL BE COMPACTED TO NO LESS THAN 98% OF MAX. DRY DENSITY. EXCESS EXCAVATED MATERIAL SHALL BE REMOVED FROM THE SITE.
2. ALL DISTURBED AREAS SHALL BE SEEDED AND MULCHED. SEED MIXTURE REQUIRES THE APPROVAL OF THE CITY ENGINEER.
3. PAVEMENT MARKINGS AND SIGNAGE SHALL CONFORM TO OHIO MANUAL ON UNIFORM TRAFFIC CONTROL DEVICES.
4. SHARED-USE PATHS CROSSING CONCRETE RESIDENTIAL DRIVEWAY APPROACHES SHALL BE 6" PC CONCRETE ACROSS THE WIDTH OF THE DRIVEWAY APPROACH, UNLESS OTHERWISE APPROVED BY THE CITY ENGINEER. SHARED-USE PATHS CROSSING RESIDENTIAL DRIVEWAY APPROACHES SHALL MATCH THE THICKNESS AND CROSS-SECTION OF THE DRIVEWAY APPROACH OR 8" PC CONCRETE, WHICHEVER IS GREATER, AS APPROVED BY THE CITY ENGINEER.
5. FOR GEOMETRIC STANDARDS FOR CURB RAMP REFER TO DUBLIN STD. DWG. PD-01.

Date: 05/01/2014

City of Dublin
ENGINEERING

STANDARD DRAWING

SHARED-USE PATH: STANDARD AND HEAVY DUTY

SHEET 1 OF 1

DRAWING NO. ***RD-06***

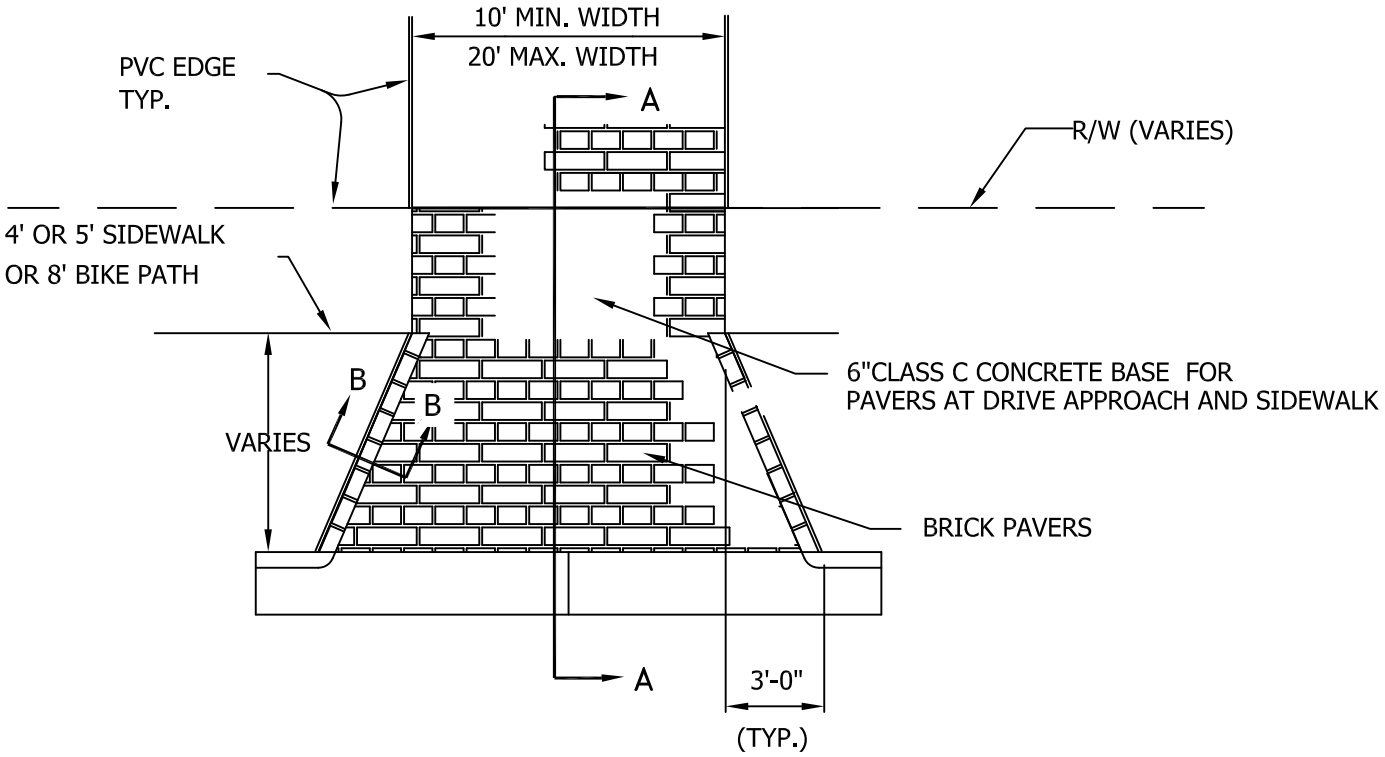

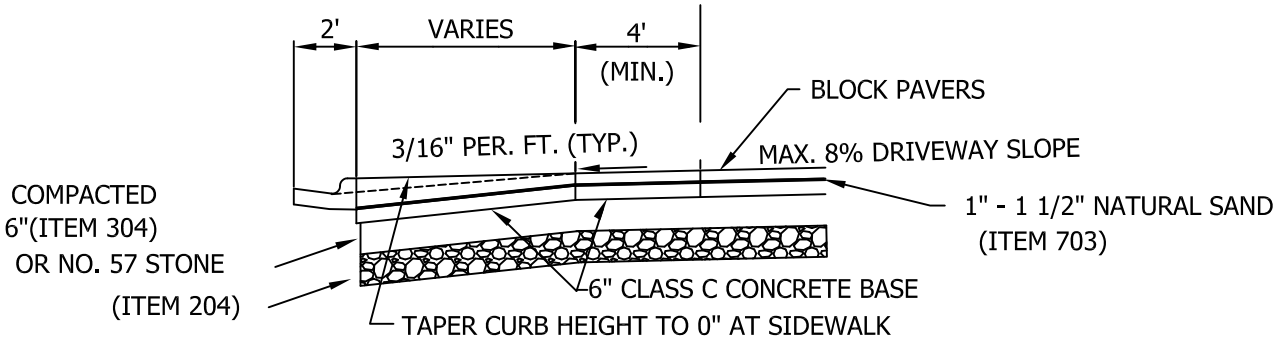

SECTION A-A

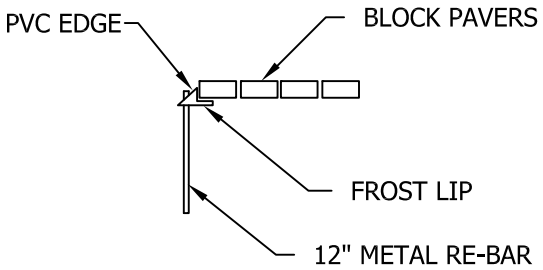

SECTION B-B

Date: 05/01/2014

City of Dublin
ENGINEERING

STANDARD DRAWING

RESIDENTIAL DRIVEWAY AND APPROACH WITH BRICK PAVERS

SHEET 3 OF 9

DRAWING NO. ***RD-07***

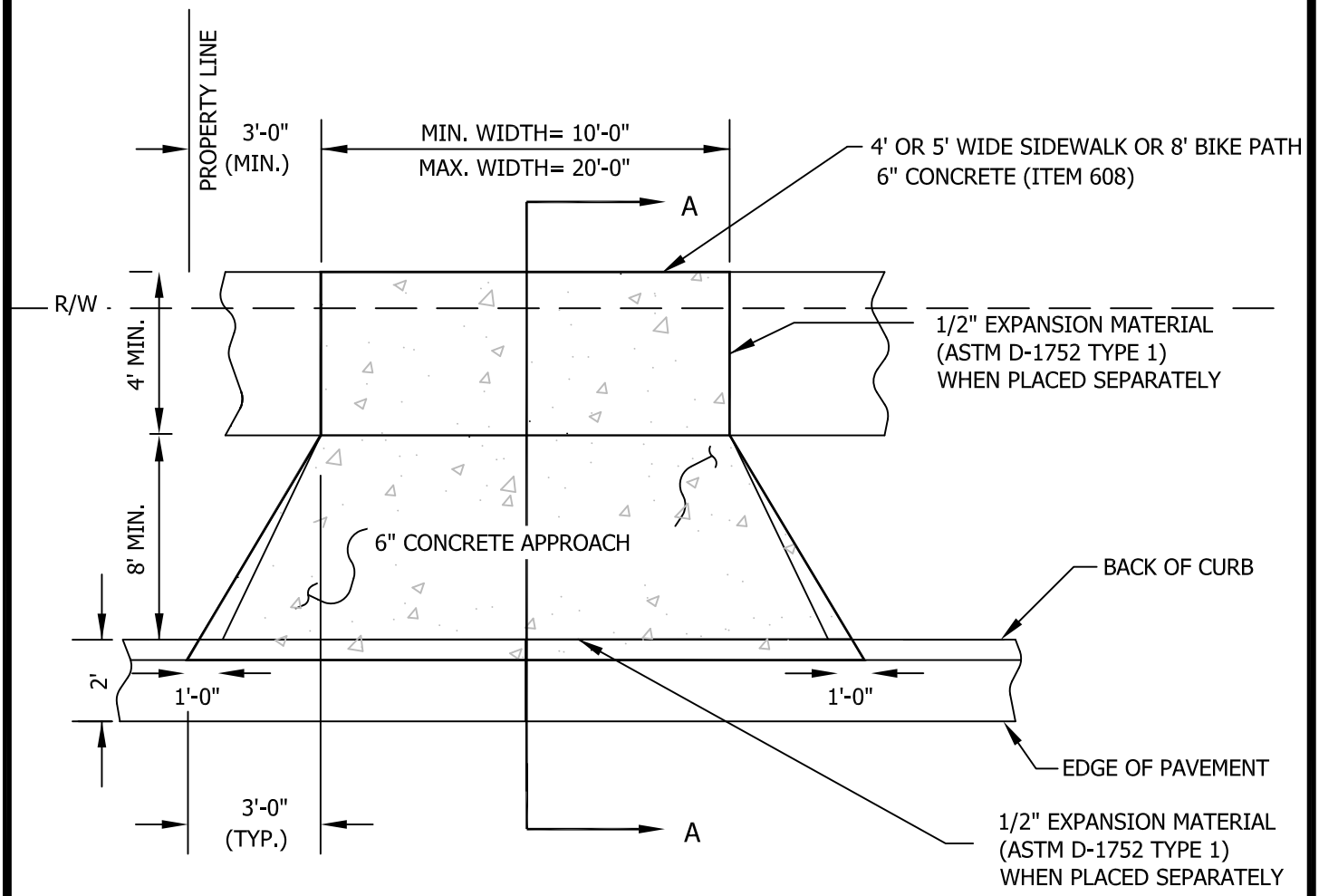

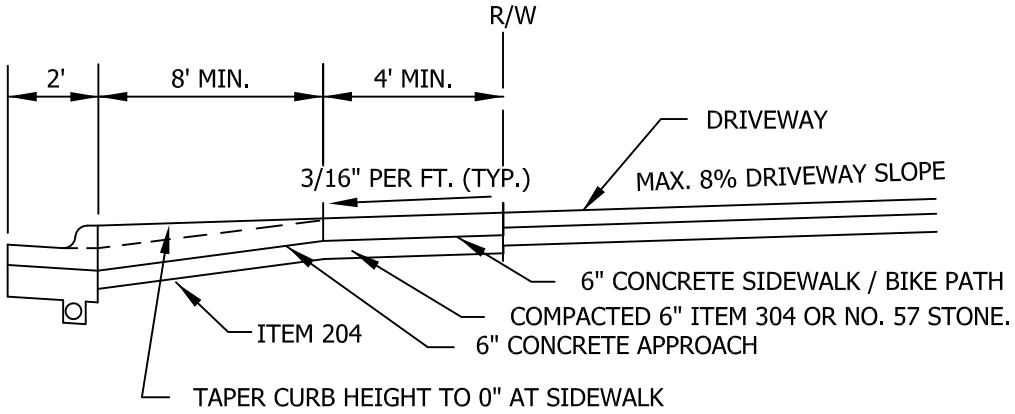

SECTION A-A

Date: 05/01/2014

City of Dublin
ENGINEERING

STANDARD DRAWING

RESIDENTIAL DRIVEWAY APPROACH FOR STREETS WITH CURB AND GUTTER

SHEET 1 OF 9

DRAWING NO. **RD-07**

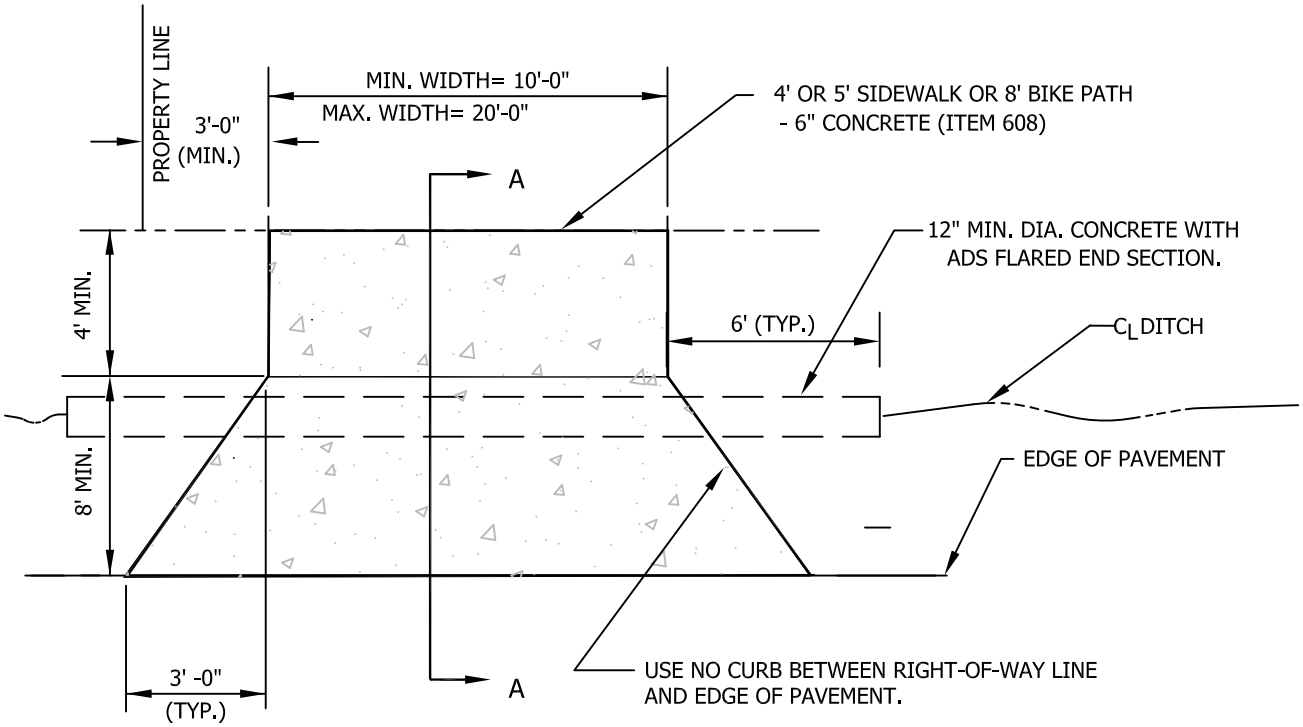

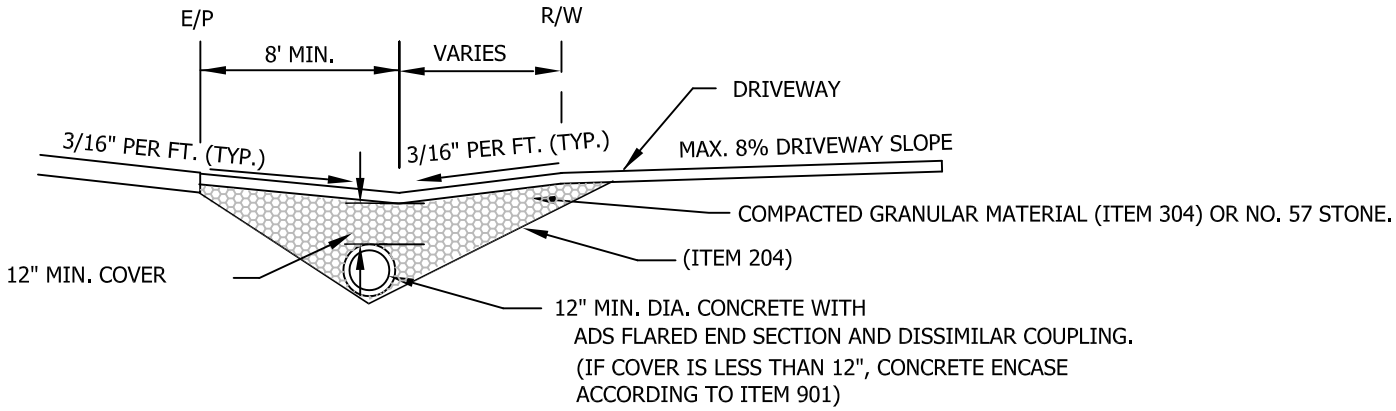

SECTION A-A

NOTE:

1. THE CITY ENGINEER MAY REQUIRE LARGER PIPE TO BE INSTALLED. MINIMUM SLOPE OF PIPE SHALL BE 1 % UNLESS OTHERWISE APPROVED.

2. DRIVE APPROACH SHALL BE 6" CONCRETE OR ALTERNATE ASPHALT AS REQUIRED.
   6" AGGREGATE BASE ITEM 304
   1 1/4" ASPHALT ITEM 402
   1 3/4" ASPHALT ITEM 404

Date: 05/01/2014

City of Dublin
ENGINEERING

STANDARD DRAWING

RESIDENTIAL DRIVEWAY APPROACH FOR STREETS WITHOUT CURB AND GUTTER

DRAWING NO. **RD-07**

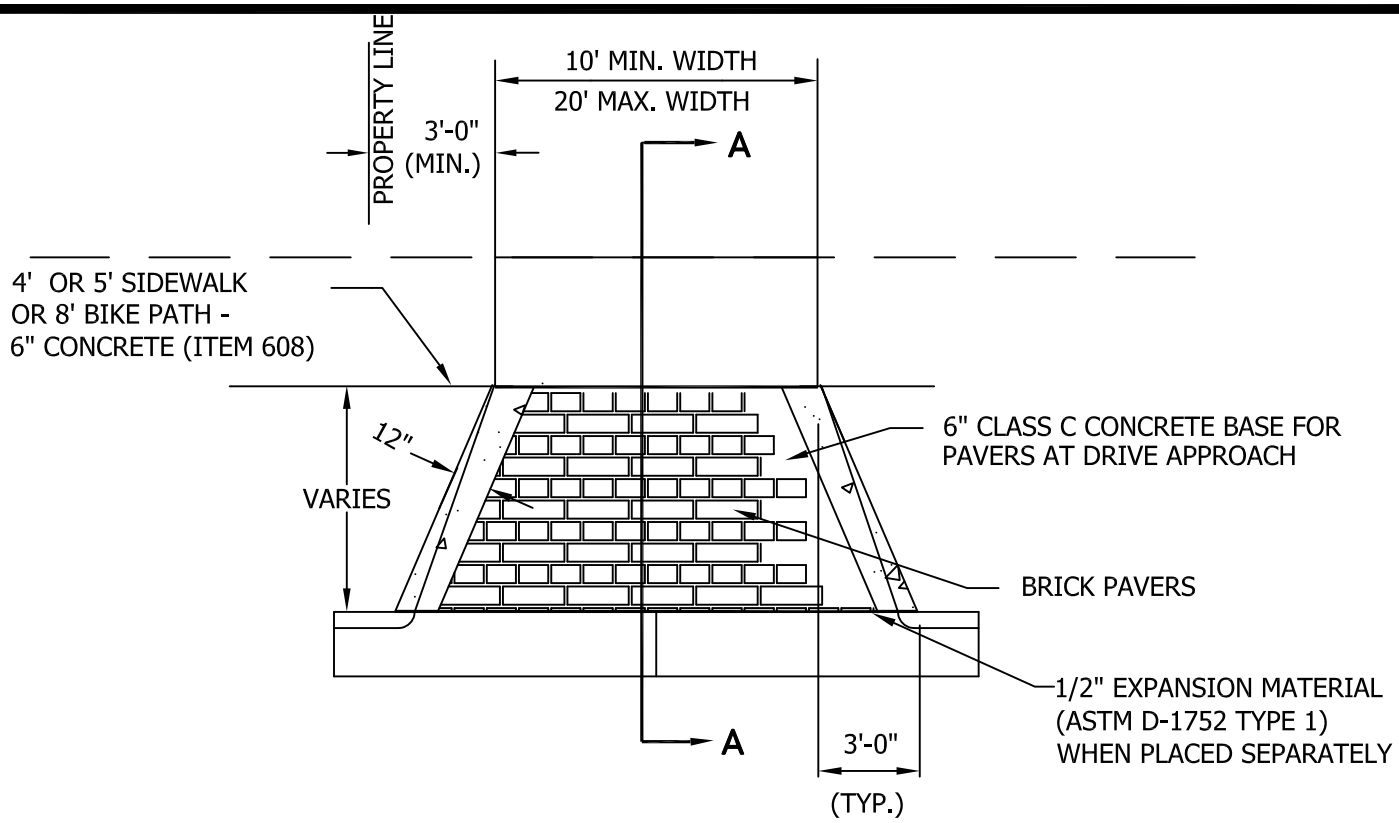

SEE SHEET 5 OF 9 OF CITY OF DUBLIN STANDARD DRAWING RD-07 FOR ADDITIONAL REQUIREMENTS FOR BRICK PAVERS.

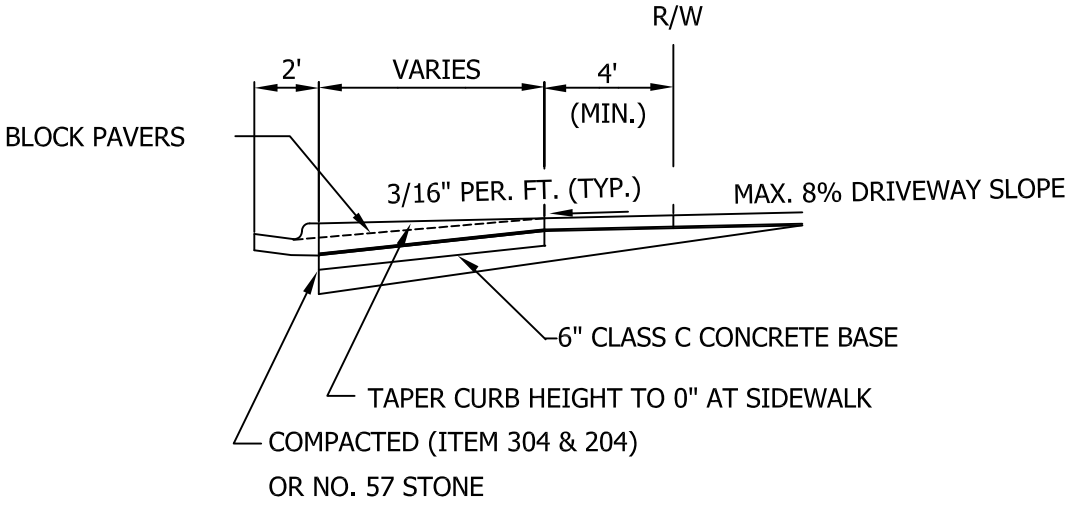

SECTION A–A

Date: 05/01/2014

City of Dublin
ENGINEERING

STANDARD DRAWING

RESIDENTIAL DRIVEWAY APPROACH FOR COMBINATION CONCRETE AND BRICK PAVERS

SHEET 4 OF 9

DRAWING NO. ***RD-07***

1. THE FOLLOWING ARE SPECIFICATIONS WHICH APPLY TO THE SUBSTITUTION OF APPROVED BRICK PAVERS FOR CONCRETE DRIVEWAYS AND DRIVEWAY APPROACHES.

2. PAGES 3 AND 4 OF 9 OF CITY OF DUBLIN STANDARD DRAWING RD-07 DETAIL THE APPROVED PLACEMENT OF BRICK PAVERS.

3. THE WORK SHALL BE INSPECTED PRIOR TO PLACEMENT BY CITY OF DUBLIN CITY ENGINEER OR DESIGNEE(S).

4. THE BRICK PAVERS ON THE GRANULAR BASE SHALL HAVE A PVC FROST LIP/EDGE OR APPROVED EQUIVALENT TO SERVE AS A FORM FOR THE PAVERS.

5. THE CLASS C CONCRETE BASE SHALL BE PROVIDED ACCORDING TO CITY OF COLUMBUS CONSTRUCTION AND MATERIAL SPECIFICATIONS (CCMS).

6. THE GRANULAR BASE SHALL BE PLACED ACCORDING TO CCMS. PAVING SHALL BE PROVIDED ONLY WITH ACCEPTABLE BASE CONDITIONS, AS DETERMINED BY THE CITY OF DUBLIN CITY ENGINEER OR DESIGNEE(S). THIS INCLUDES, BUT IS NOT LIMITED TO, SOFT, WATER SATURATED, FROZEN OR FROST-AFFECTED MATERIAL. UNACCEPTABLE MATERIAL SHALL BE STABILIZED OR REMOVED PRIOR TO PAVING.

7. THE FOLLOWING PAVING MATERIALS HAVE BEEN ACCEPTED FOR USE AS SUBSTITUTES FOR CONCRETE DRIVEWAYS AND DRIVEWAY APPROACHES. ACCEPTANCE IS SUBJECT TO A REVIEW OF MANUFACTURER'S SPECIFICATIONS AND FIELD PERFORMANCE BY THE CITY ENGINEER. ACCEPTANCE OF ALTERNATE MATERIALS IS SUBJECT TO CONTINUAL REVIEW AND MAY BE WITHDRAWN AT THE DISCRETION OF THE CITY ENGINEER.

ACCEPTED MATERIALS:

UNI-STONE PAVING STONES
INTER PAVE CORPORATION
8479 BROADWELL ROAD
CINCINNATI, OHIO 43224
(513) 474-3783

Date: 05/01/2014

City of Dublin
ENGINEERING

STANDARD DRAWING

RESIDENTIAL BRICK PAVER SIDEWALK, DRIVEWAY, AND DRIVEWAY APPROACH

DRAWING NO. ***RD-07***

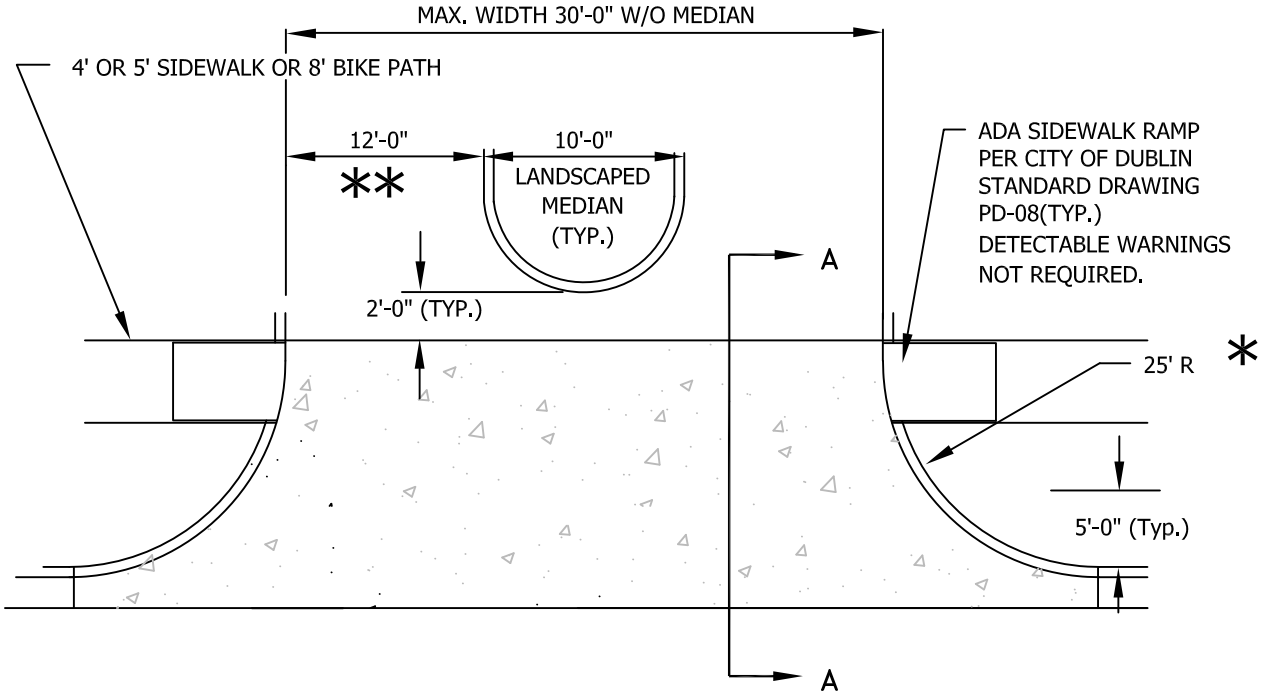

* MINIMUM RADIUS IS 25 FEET UNLESS OTHERWISE APPROVED BY THE CITY ENGINEER.

** MINIMUM LANE WIDTH SHALL BE 12'-0". NUMBER OF LANES REQUIRES APPROVAL BY THE CITY ENGINEER.

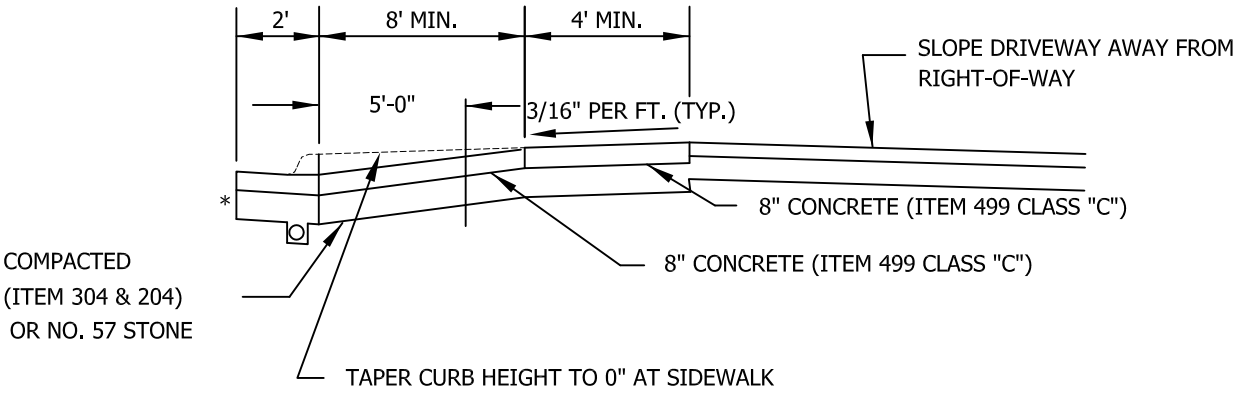

SECTION A-A

DRIVEWAY APPROACH SHALL BE 8" PORTLAND CEMENT CONCRETE OR STRUCTURAL EQUIVALENT AS APPROVED BY THE CITY ENGINEER.

EXISTING CURB AND GUTTER TO BE REMOVED WITHIN THE LIMITS OF DRIVEWAY. APPROACH AND GUTTER TO BE POURED INTEGRAL. MAINTAIN GUTTER SLOPE AND UNDER DRAIN THROUGH THE DRIVEWAY.

* SEE DRAWING RD-02 FOR COMBINATION CONCRETE CURB & GUTTER.

Date: 05/01/2014

City of Dublin
ENGINEERING

STANDARD DRAWING

DIVIDED COMMERCIAL DRIVEWAY APPROACH FOR STREETS WITH CURB & GUTTER

DRAWING NO. ***RD-07***

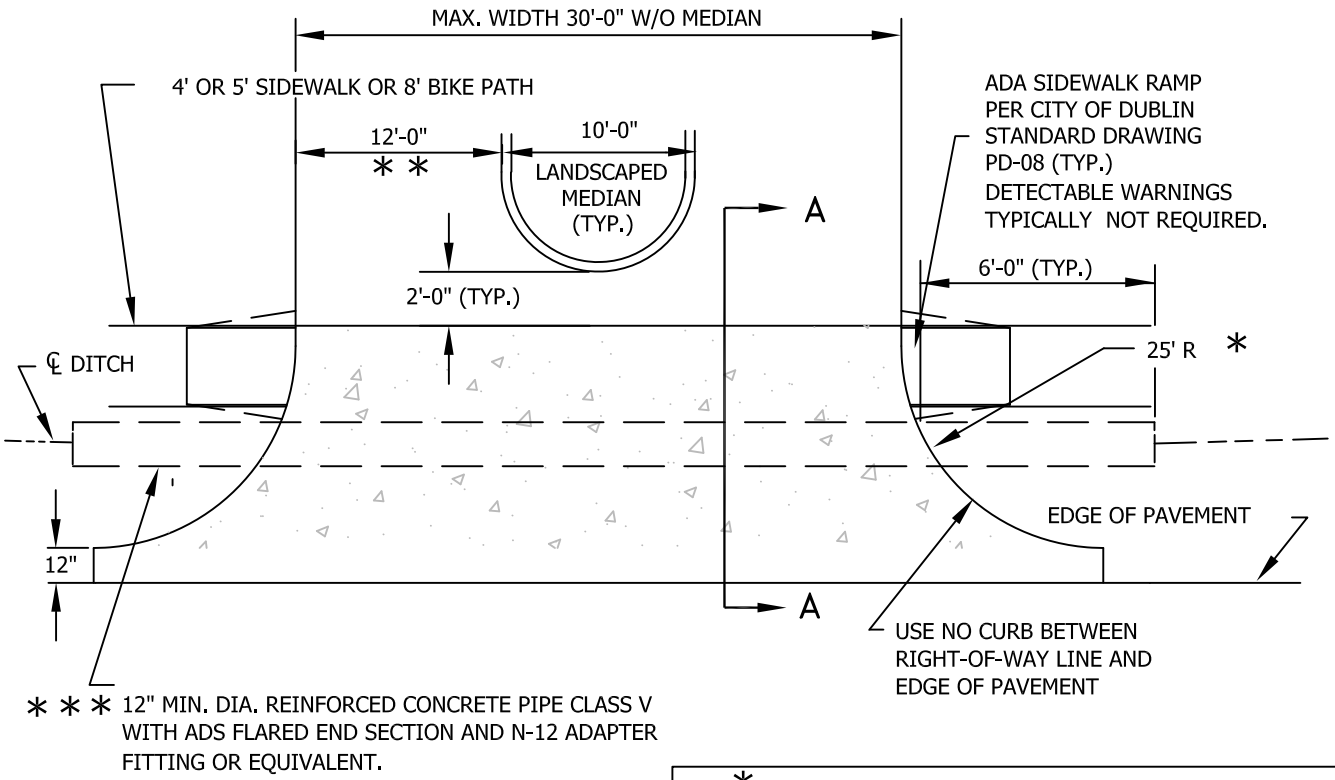

* * * NOTE: THE CITY ENGINEER MAY REQUIRE LARGER PIPE TO BE INSTALLED. MINIMUM SLOPE SHALL BE 1 % UNLESS OTHERWISE APPROVED.

* MINIMUM RADIUS IS 25 FEET UNLESS OTHERWISE APPROVED BY THE CITY ENGINEER.

* * MINIMUM LANE WIDTH SHALL BE 12'-0". NUMBER OF LANES REQUIRES APPROVAL BY THE CITY ENGINEER.

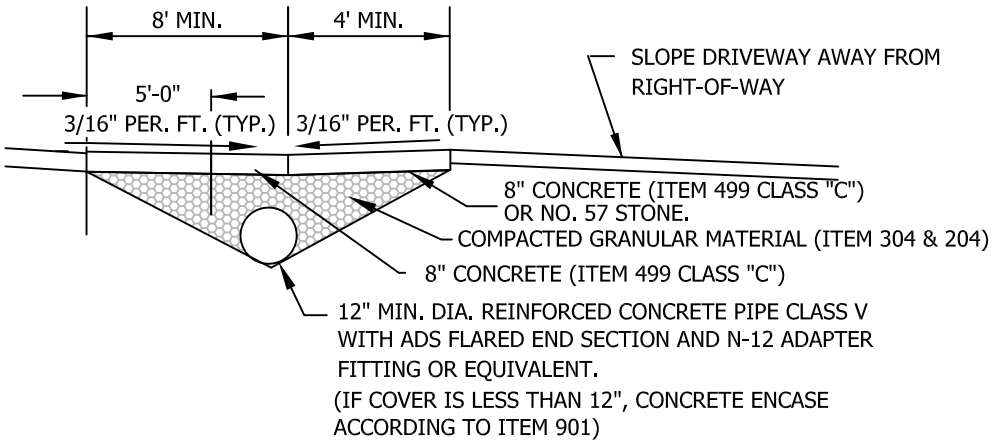

SECTION A-A

DRIVEWAY APPROACH SHALL BE 8" PORTLAND CEMENT CONCRETE OR STRUCTURAL EQUIVALENT AS APPROVED BY THE CITY ENGINEER.

Date: 05/01/2014

City of Dublin ENGINEERING

STANDARD DRAWING

DIVIDED COMMERCIAL DRIVEWAY APPROACH FOR STREETS WITHOUT CURB & GUTTER

DRAWING NO. **RD-07**

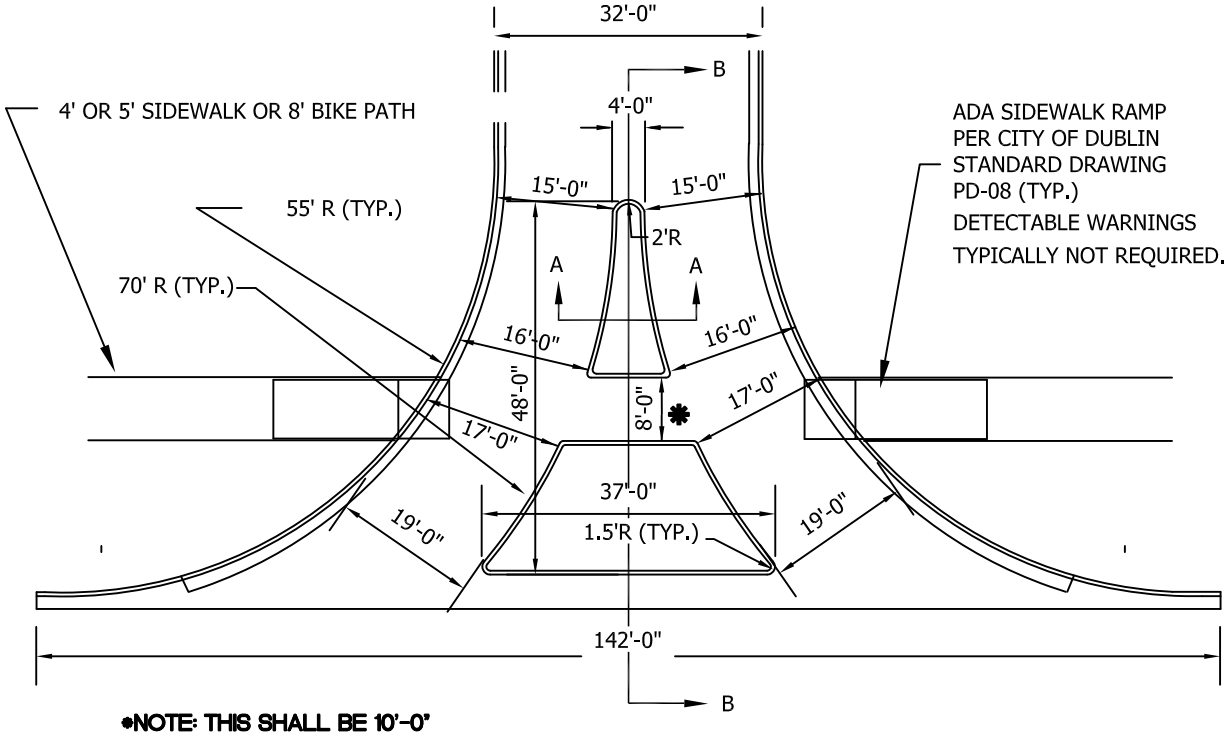

***NOTE: THIS SHALL BE 10'-0" FOR A BIKEPATH CROSSING CROSS SLOPE 1.56%.**

THIS DESIGN ACCOMMODATES WB-40 VEHICLES, AS PRESCRIBED BY AASHTO. IF A LARGER VEHICLE NEEDS ACCOMMODATED A SPECIFIC DESIGN WILL BE REQUIRED.

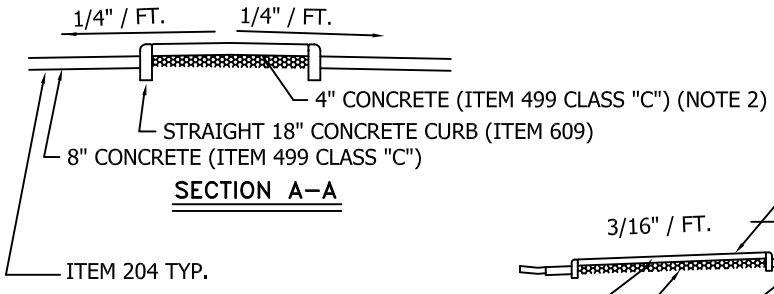

SECTION A–A

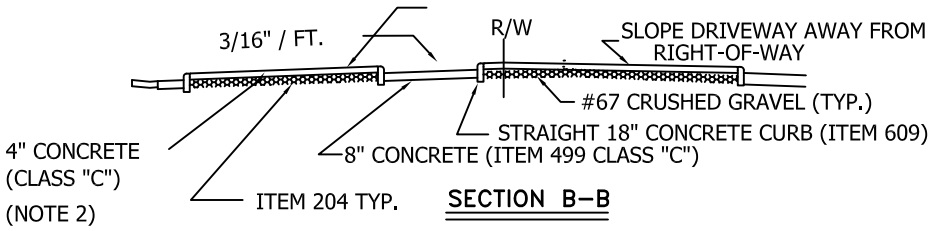

SECTION B–B

1. DRIVEWAY APPROACH SHALL BE 8" PC CONCRETE OR STRUCTURAL EQUIVALENT AS APPROVED BY THE CITY ENGINEER.
2. ISLAND SURFACE IN DRIVEWAY APPROACH MAY BE EITHER 4" PC CONCRETE OR LANDSCAPING VEGETATION WITH A HEIGHT NO GREATER THAN 3 FEET ABOVE THE TOP OF CURB. LANDSCAPING MATERIALS SHALL BE SUBJECT TO THE REVIEW AND APPROVAL OF THE CITY OF DUBLIN DIVISION OF PLANNING. MAINTENANCE OF LANDSCAPING SHALL BE THE RESPONSIBILITY OF THE PROPERTY OWNER.
3. EXISTING CURB AND GUTTER TO BE REMOVED WITHIN THE LIMITS OF DRIVEWAY. APPROACH AND GUTTER TO BE POURED INTEGRAL. MAINTAIN GUTTER SLOPE AND UNDER DRAIN THROUGH DRIVEWAY.

* SEE DRAWING RD-02 FOR COMBINATION CONCRETE CURB & GUTTER.

Date: 05/01/2014

City of Dublin
ENGINEERING

STANDARD DRAWING

RIGHT IN, RIGHT OUT COMMERCIAL APPROACH

DRAWING NO. ***RD-07***

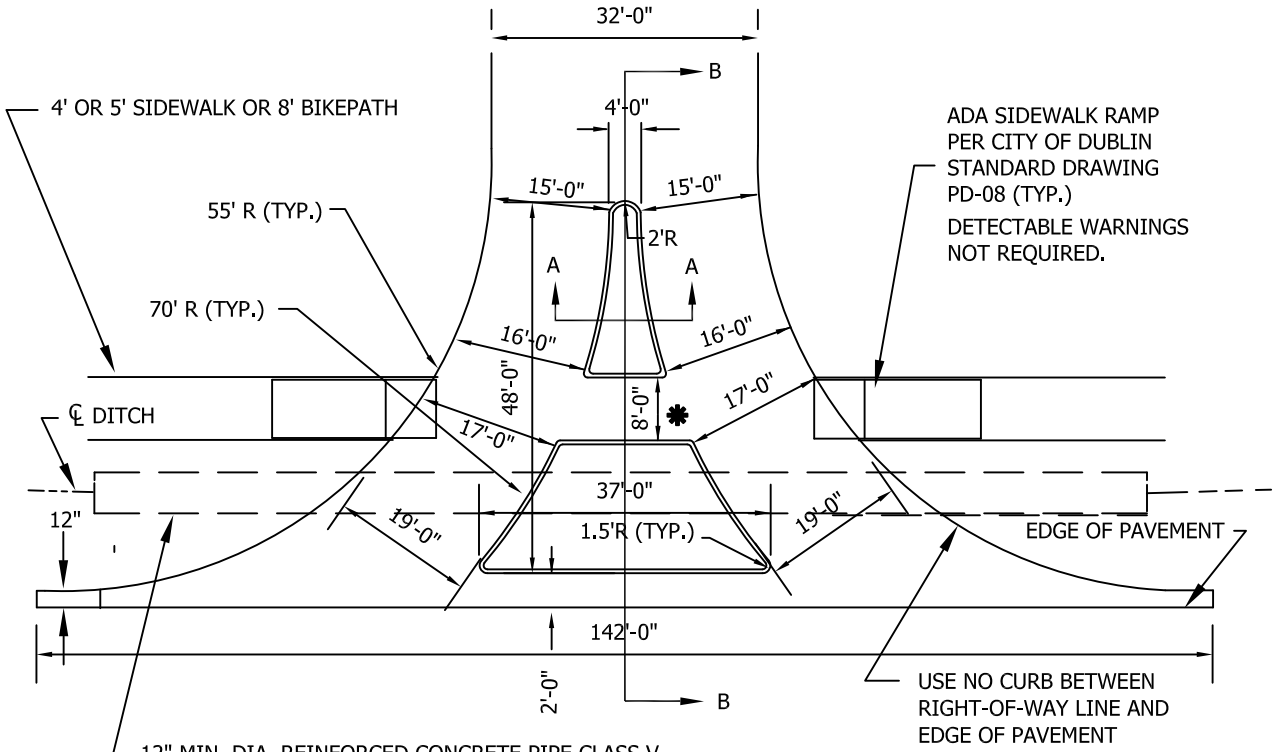

*NOTE: THIS SHALL BE 10'-0" FOR A BIKEPATH CROSSING CROSS SLOPE 1.56%.

THIS DESIGN ACCOMMODATES WB-40 VEHICLES, AS PRESCRIBED BY AASHTO. IF A LARGER VEHICLE NEEDS TO BE ACCOMMODATED A SPECIFIC DESIGN WILL BE REQUIRED.

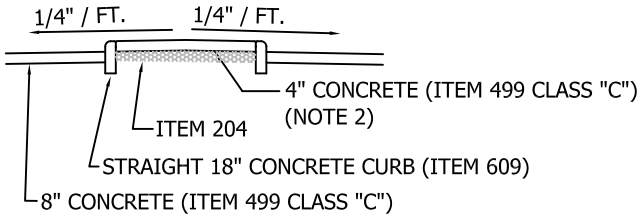

SECTION A-A

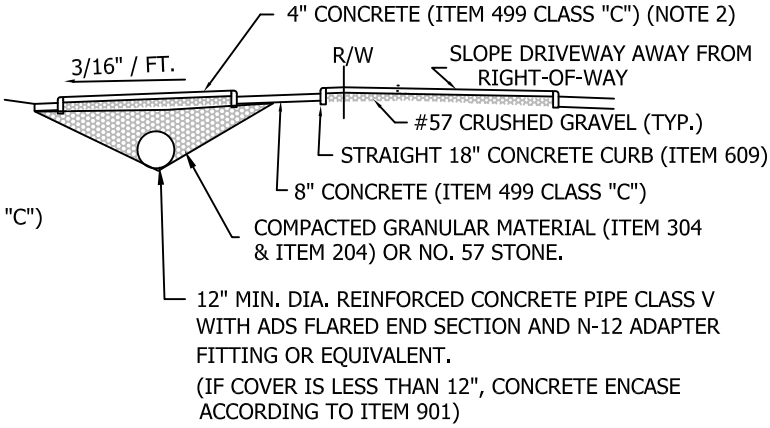

SECTION B-B

1. DRIVEWAY APPROACH SHALL BE 8" PC CONCRETE OR STRUCTURAL EQUIVALENT AS APPROVED BY THE CITY ENGINEER.
2. ISLAND SURFACE IN DRIVEWAY APPROACH MAY BE EITHER 4" PC CONCRETE OR LANDSCAPING VEGETATION WITH A HEIGHT NO GREATER THAN 3 FEET ABOVE THE TOP OF CURB. LANDSCAPING MATERIALS SHALL BE SUBJECT TO THE REVIEW AND APPROVAL OF THE CITY OF DUBLIN DIVISION OF PLANNING. MAINTENANCE OF LANDSCAPING SHALL BE THE RESPONSIBILITY OF THE PROPERTY OWNER.

Date: 05/01/2014

City of Dublin
ENGINEERING

STANDARD DRAWING

RIGHT IN, RIGHT OUT COMMERCIAL APPROACH WITHOUT CURB & GUTTER

DRAWING NO. **RD-07**

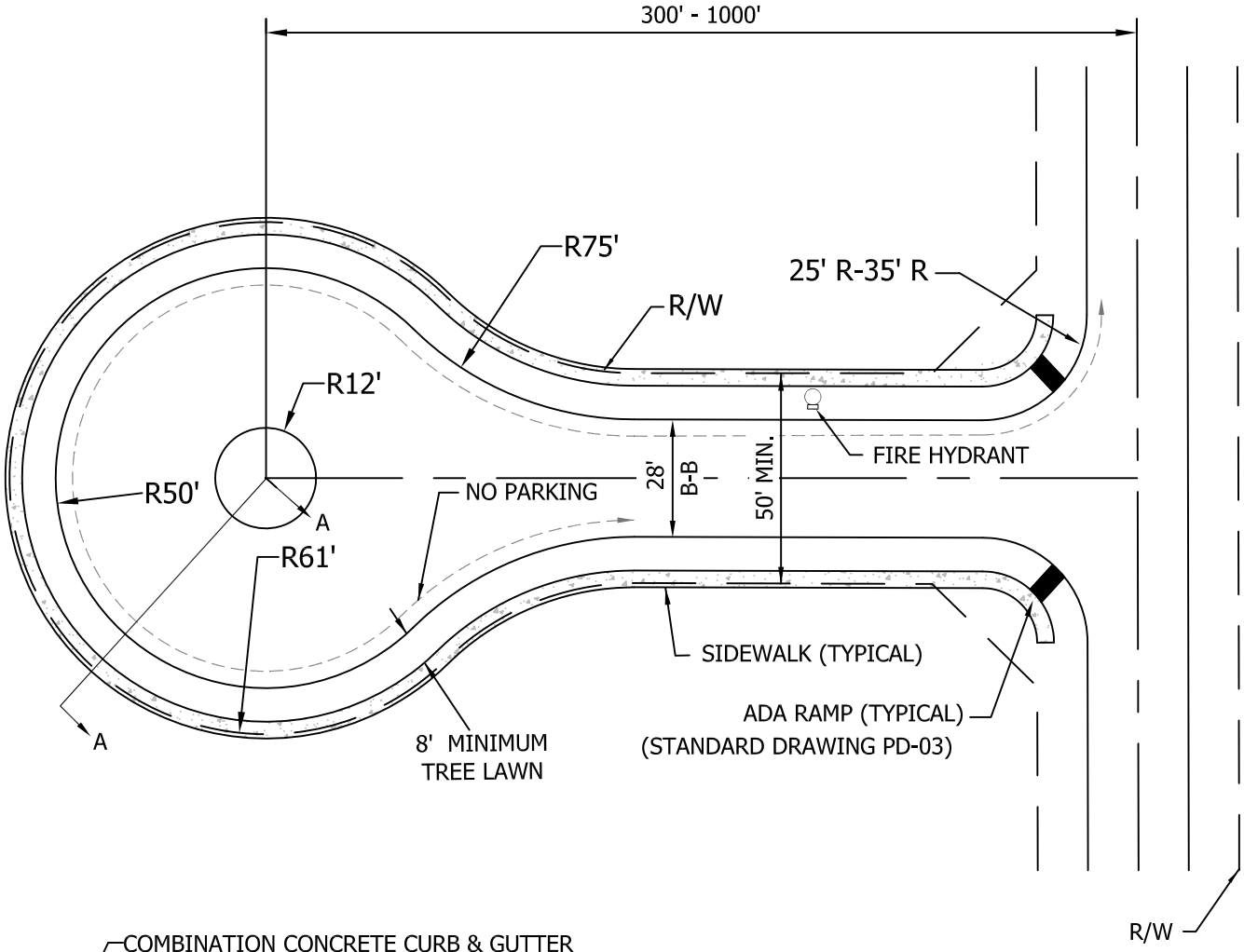

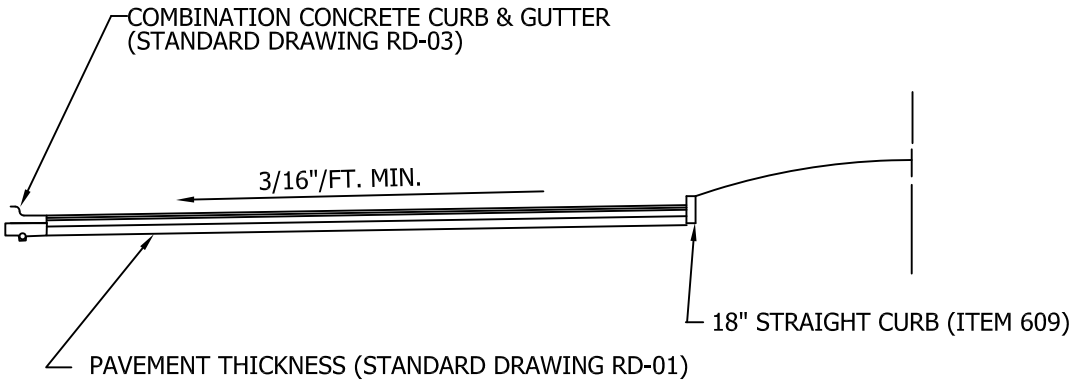

SECTION A-A

NOTES:

1. NO PARKING WILL BE PERMITTED WITHIN THE CIRCULAR TURNAROUND AND ALONG THE SIDE OF STREETS WITH FIRE HYDRANT.
2. **ALL PAVEMENT DIMENSIONS SHOWN ARE TO BACK OF CURB.**
3. A 3/4" WATER SERVICE TAP SHALL BE PROVIDED TO THE LANDSCAPE ISLAND.

Date: 05/01/2014

City of Dublin
ENGINEERING

STANDARD DRAWING

CUL-DE-SAC: 300' - 1000'

SHEET 1 OF 1

DRAWING NO. ***RD-08***

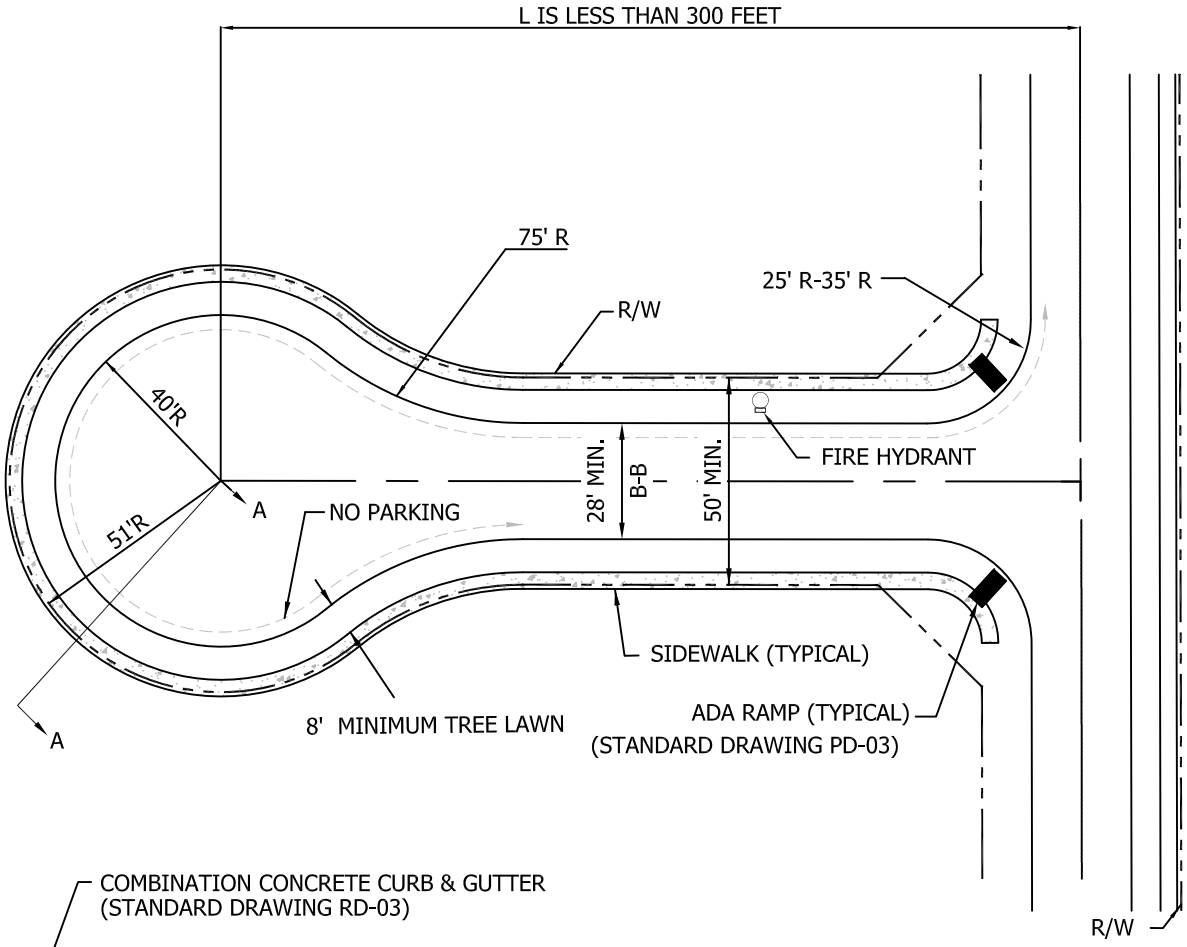

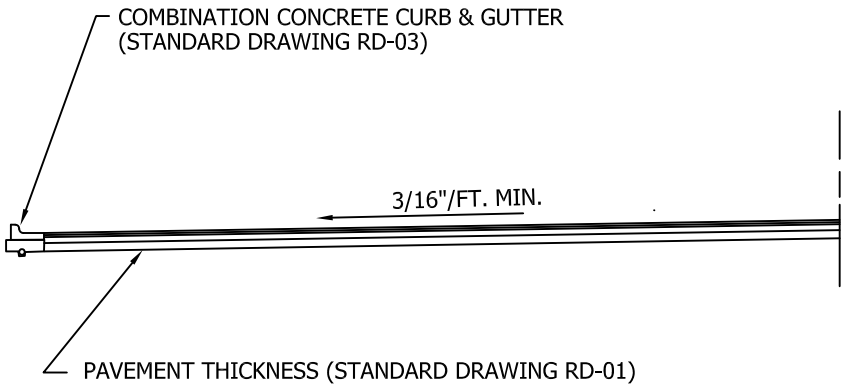

SECTION A-A

NOTES:

1. ALL PAVEMENT DIMENSIONS SHOWN ARE TO BACK OF CURB.

2. NO PARKING WILL BE PERMITTED WITHIN THE CIRCULAR TURNAROUND AND ALONG THE SIDE OF STREETS WITH FIRE HYDRANTS.

Date: 05/01/2014

City of Dublin
ENGINEERING

STANDARD DRAWING

CUL-DE-SAC LESS THAN 300'

SHEET 1 OF 1

DRAWING NO. **RD-09**

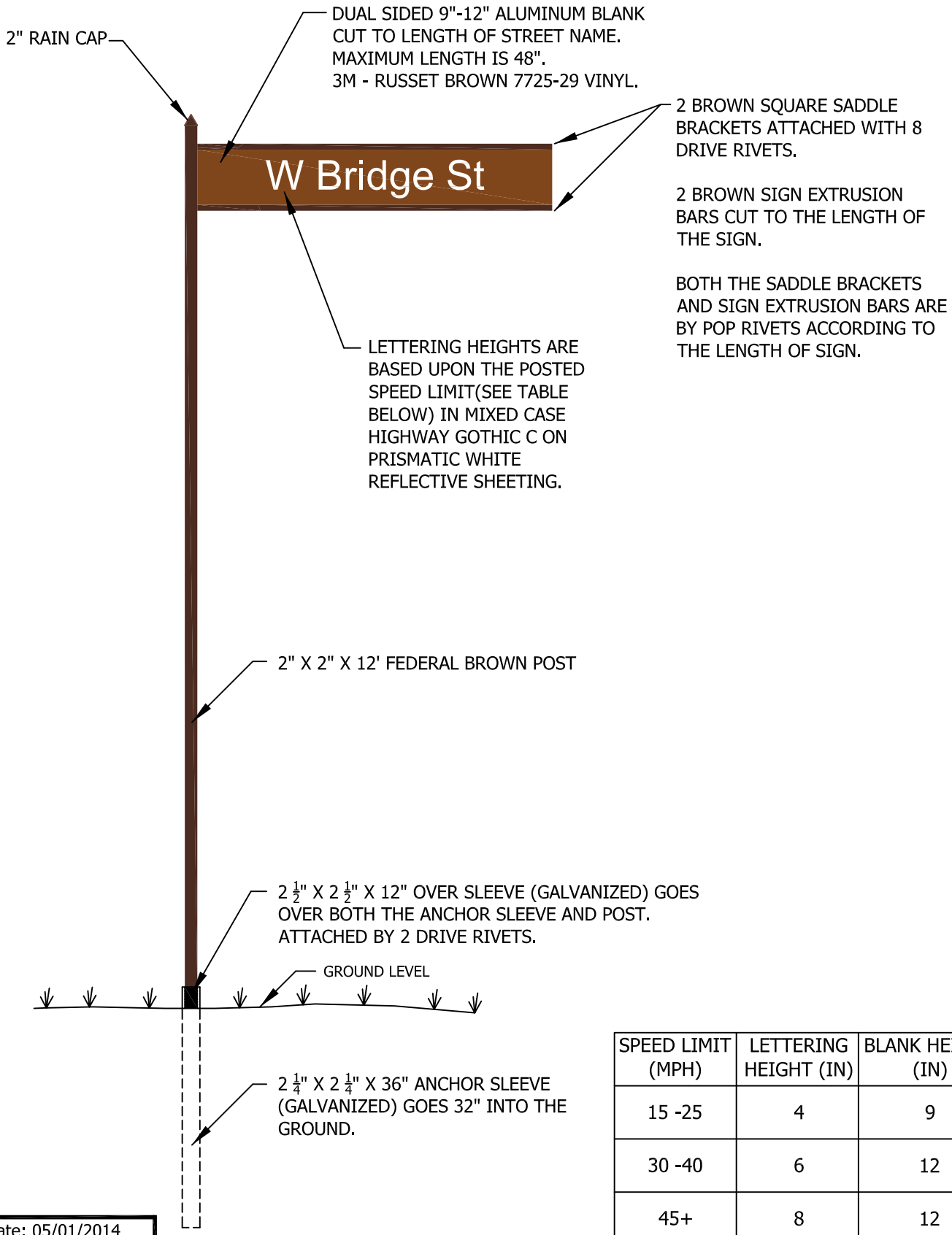

SPEED LIMIT (MPH)	LETTERING HEIGHT (IN)	BLANK HEIGHT (IN)
15 -25	4	9
30 -40	6	12
45+	8	12

Date: 05/01/2014

City of Dublin
ENGINEERING

STANDARD DRAWING

TYPICAL STREET NAME SIGN

SHEET 1 OF 1

DRAWING NO. ***RD-10***

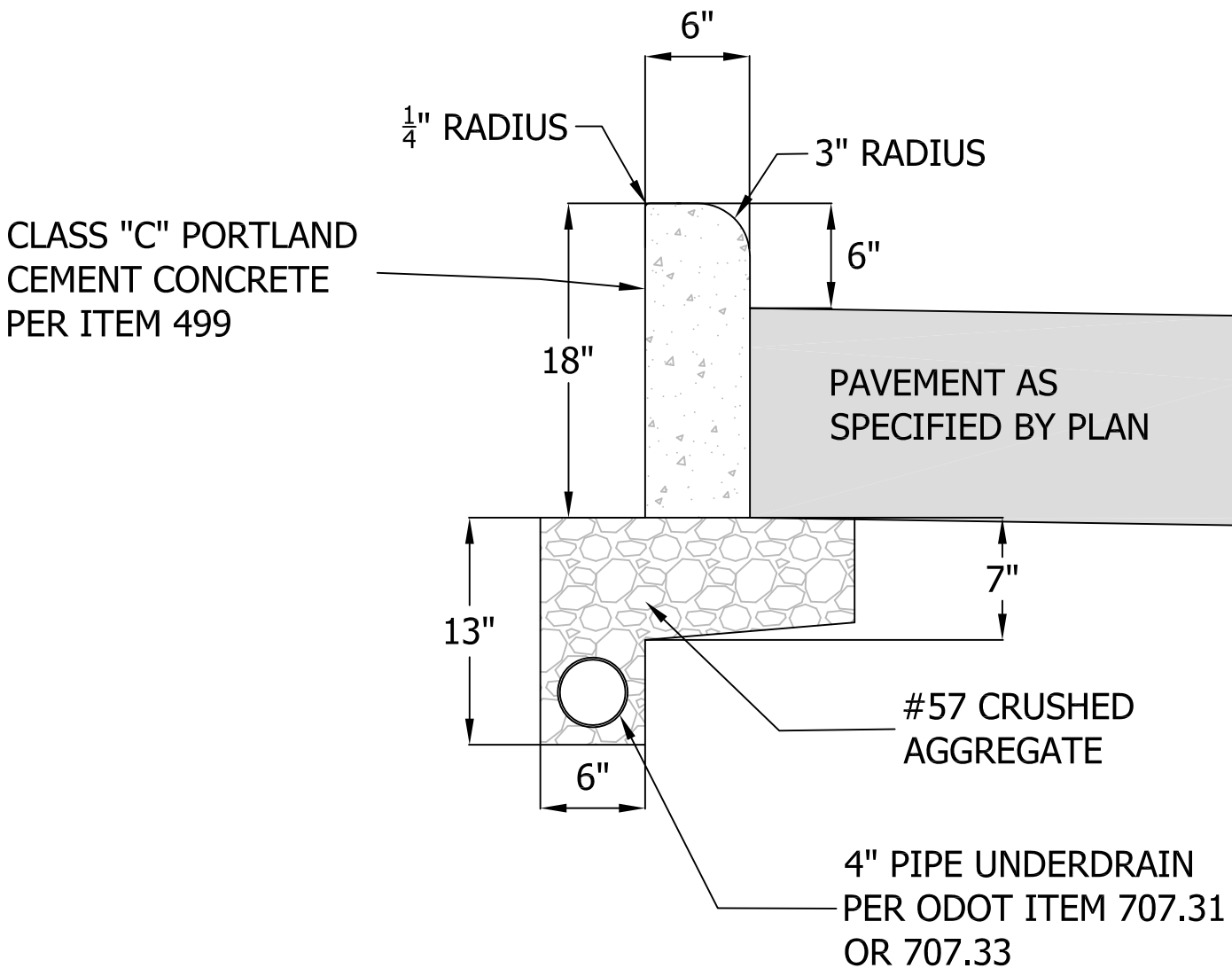

Date: 05/01/2014

City of Dublin
ENGINEERING

STANDARD DRAWING

STRAIGHT 18" CONCRETE CURB

SHEET 1 OF 1

DRAWING NO. ***RD-11***

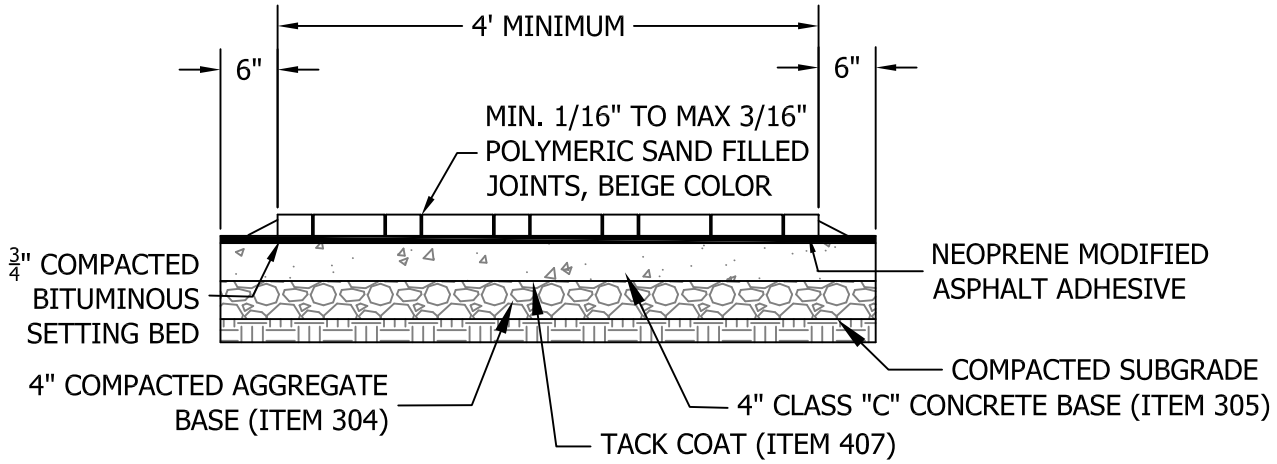

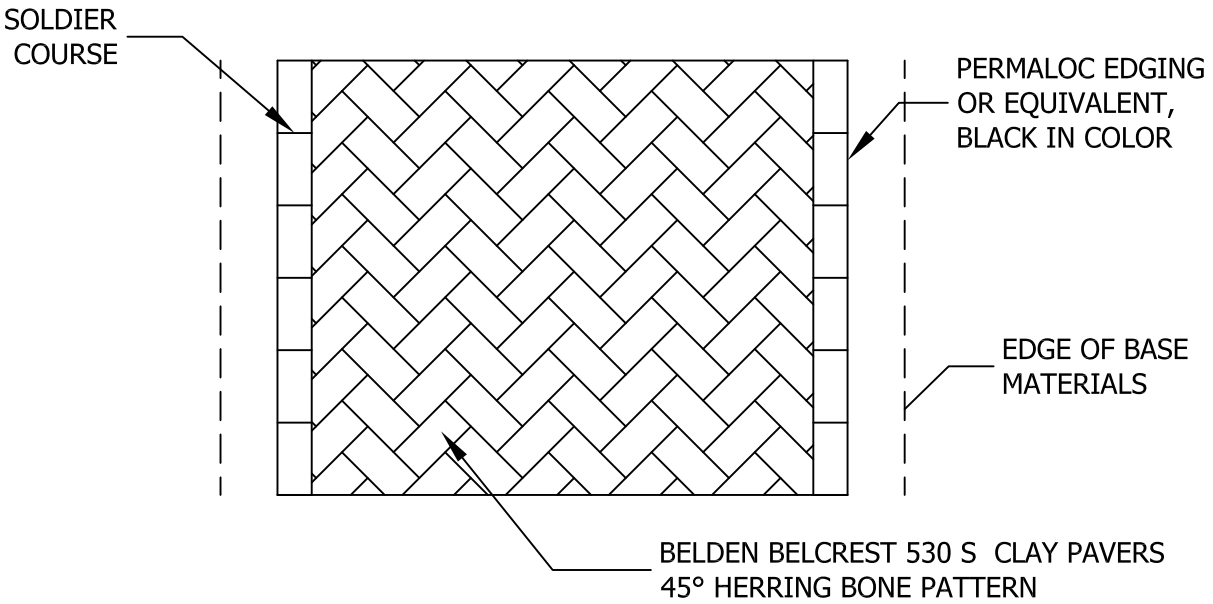

NOTES:

1.) THE PAVERS SHALL BE BELDEN BELCREST 530 S CLAY PAVERS, 2 1/4" x 3 5/8" x 7 5/8", MADE BY BELDEN BRICK COMPANY, CANTON, OHIO, LAID IN A 45 ° HERRINGBONE PATTERN.

2.) ALL JOINTS SHALL BE FILLED WITH A POLYMERIC SAND. SAND SHALL BE ALLIANCE GATOR MAXX POLYMERIC SAND FOR OVERLAYS AND BEIGE IN COLOR OR AN APPROVED EQUAL.

3.) FURNISH NEOPRENE MODIFIED ASPHALT ADHESIVE THAT CONTAINS 2% GRADE WM1 NEOPRENE, OXIDIZED ASPHALT WITH A 150 DEGREE SOFTENING POINT (77 PENETRATION), AND 10% LONG-FIBERED INERT MATERIAL, AS SUPPLIED BY SEIDEL COMPANY, INC., NEWBURYPORT, MA, (617) 649-6740; HASTINGS PAVEMENT COMPANY, INC., LAKE SUCCESS, NY, (516) 379-3500; OR APPROVED EQUAL.

4.) FURNISH ASPHALT CEMENT CONFORMING TO ASTM D 3381, PG64-22. FINE AGGREGATE SHALL BE NATURAL SAND AND/OR STONE SAND COMPOSED OF HARD, DURABLE, UNCOATED PARTICLES, FREE FROM CLAY, SILT, ORGANIC MATERIAL, OR OTHER DELETERIOUS SUBSTANCES. ALL SAND SHALL BE UNIFORMLY GRADED AND PASS A NO. 4 SIEVE, MEETING THE REQUIREMENTS OF ASTM C 136. THE DRIED FINE AGGREGATE SHALL BE MIXED WITH HOT ASPHALT CEMENT AT THE PLANT AND HEATED TO APPROXIMATELY 300 DEGREES (F). APPROXIMATE MATERIAL PROPORTIONS SHALL BE 7% ASPHALT CEMENT AND 93% FINE AGGREGATE; OR 140 LBS ASPHALT TO 1,860 LBS FINE AGGREGATE PER TON.

Date: 05/01/2014

City of Dublin
ENGINEERING

STANDARD DRAWING

BRICK PAVER SIDEWALK

SHEET 1 OF 1

DRAWING NO. ***RD-12***

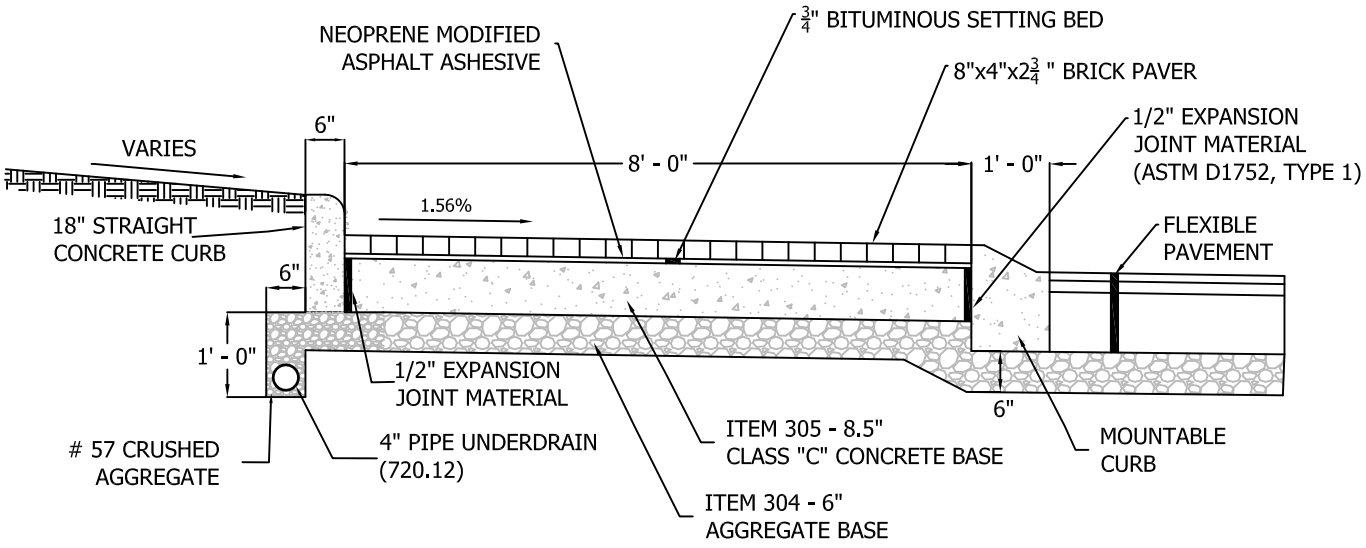

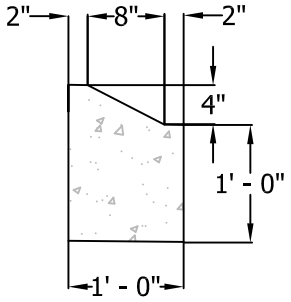

MOUNTABLE CURB DETAIL

NOTES:

1.) THE PAVERS SHALL BE REGIMENTAL FULL RANGE WITH A CHAMFERED EDGE AND SPACER LUGS, 8″ x 4″ x 2 ¾″, MADE BY BELDEN BRICK COMPANY, CANTON, OHIO, LAID IN A RUNNING BOND PATTERN.

2.) ALL JOINTS SHALL BE FILLED WITH A POLYMERIC SAND. SAND SHALL BE ALLIANCE GATOR MAXX POLYMERIC SAND FOR OVERLAYS AND SLATE GREY IN COLOR OR AN APPROVED EQUAL.

3.) FURNISH NEOPRENE MODIFIED ASPHALT ADHESIVE THAT CONTAINS 2% GRADE WM1 NEOPRENE, OXIDIZED ASPHALT WITH A 150 DEGREE SOFTENING POINT (77 PENETRATION), AND 10% LONG-FIBERED INERT MATERIAL, AS SUPPLIED BY SEIDEL COMPANY, INC., NEWBURYPORT, MA, (617) 649-6740; HASTINGS PAVEMENT COMPANY, INC., LAKE SUCCESS, NY, (516) 379-3500; OR APPROVED EQUAL.

4.) FURNISH ASPHALT CEMENT CONFORMING TO ASTM D 3381, PG64-22. FINE AGGREGATE SHALL BE NATURAL SAND AND/OR STONE SAND COMPOSED OF HARD, DURABLE, UNCOATED PARTICLES, FREE FROM CLAY, SILT, ORGANIC MATERIAL, OR OTHER DELETERIOUS SUBSTANCES. ALL SAND SHALL BE UNIFORMLY GRADED AND PASS A NO. 4 SIEVE, MEETING THE REQUIREMENTS OF ASTM C 136. THE DRIED FINE AGGREGATE SHALL BE MIXED WITH HOT ASPHALT CEMENT AT THE PLANT AND HEATED TO APPROXIMATELY 300 DEGREES (F). APPROXIMATE MATERIAL PROPORTIONS SHALL BE 7% ASPHALT CEMENT AND 93% FINE AGGREGATE; OR 140 LBS ASPHALT TO 1,860 LBS FINE AGGREGATE PER TON.

Date: 05/01/2014

City of Dublin
ENGINEERING

STANDARD DRAWING

ROUNDABOUT TRUCK APRON DETAIL

SHEET 1 OF 1

DRAWING NO. ***RD-13***

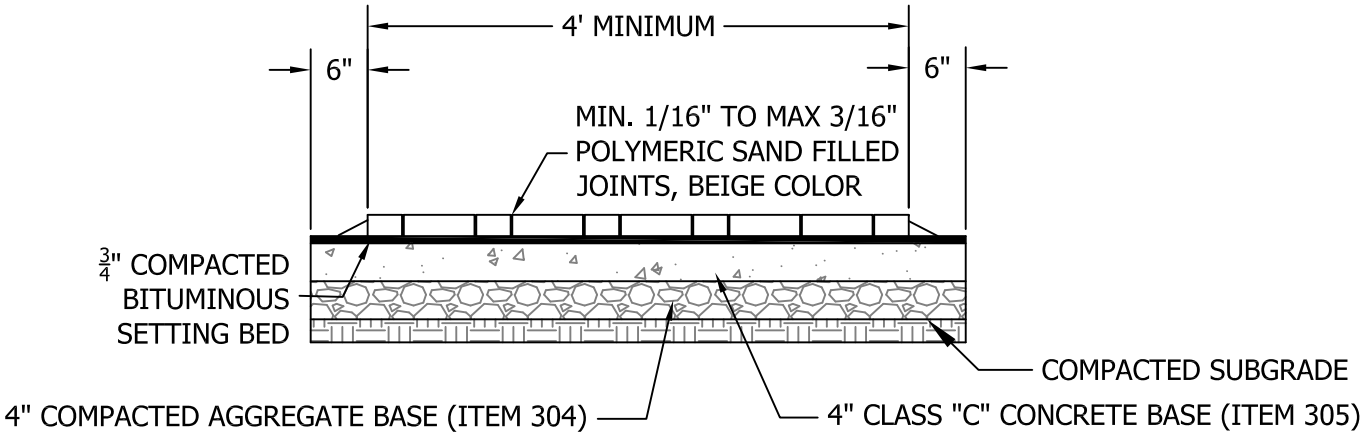

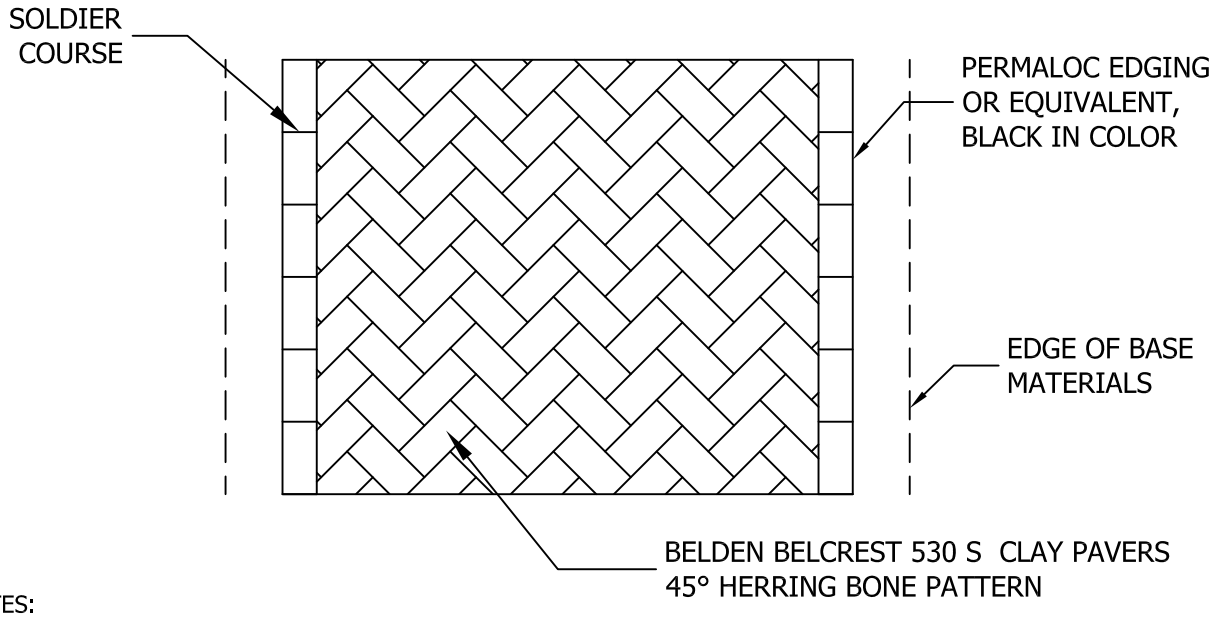

NOTES:

1.) THE PAVERS SHALL BE BELDEN BELCREST 530 S CLAY PAVERS, 2 1/4" x 3 5/8" x 7 5/8", MADE BY BELDEN BRICK COMPANY, CANTON, OHIO, LAID IN A 45 ° HERRINGBONE PATTERN.

2.) ALL JOINTS SHALL BE FILLED WITH A POLYMERIC SAND. SAND SHALL BE ALLIANCE GATOR MAXX POLYMERIC SAND FOR OVERLAYS AND BEIGE IN COLOR OR AN APPROVED EQUAL.

3.) FURNISH NEOPRENE MODIFIED ASPHALT ADHESIVE THAT CONTAINS 2% GRADE WM1 NEOPRENE, OXIDIZED ASPHALT WITH A 150 DEGREE SOFTENING POINT (77 PENETRATION), AND 10% LONG-FIBERED INERT MATERIAL, AS SUPPLIED BY SEIDEL COMPANY, INC., NEWBURYPORT, MA, (617) 649-6740; HASTINGS PAVEMENT COMPANY, INC., LAKE SUCCESS, NY, (516) 379-3500; OR APPROVED EQUAL.

4.) FURNISH ASPHALT CEMENT CONFORMING TO ASTM D 3381, PG64-22. FINE AGGREGATE SHALL BE NATURAL SAND AND/OR STONE SAND COMPOSED OF HARD, DURABLE, UNCOATED PARTICLES, FREE FROM CLAY, SILT, ORGANIC MATERIAL, OR OTHER DELETERIOUS SUBSTANCES. ALL SAND SHALL BE UNIFORMLY GRADED AND PASS A NO. 4 SIEVE, MEETING THE REQUIREMENTS OF ASTM C 136. THE DRIED FINE AGGREGATE SHALL BE MIXED WITH HOT ASPHALT CEMENT AT THE PLANT AND HEATED TO APPROXIMATELY 300 DEGREES (F). APPROXIMATE MATERIAL PROPORTIONS SHALL BE 7% ASPHALT CEMENT AND 93% FINE AGGREGATE; OR 140 LBS ASPHALT TO 1,860 LBS FINE AGGREGATE PER TON.

Date: 05/01/2014

City of Dublin
ENGINEERING

STANDARD DRAWING

BRICK PAVER SIDEWALK

SHEET 1 OF 1

DRAWING NO. ***RD-12***

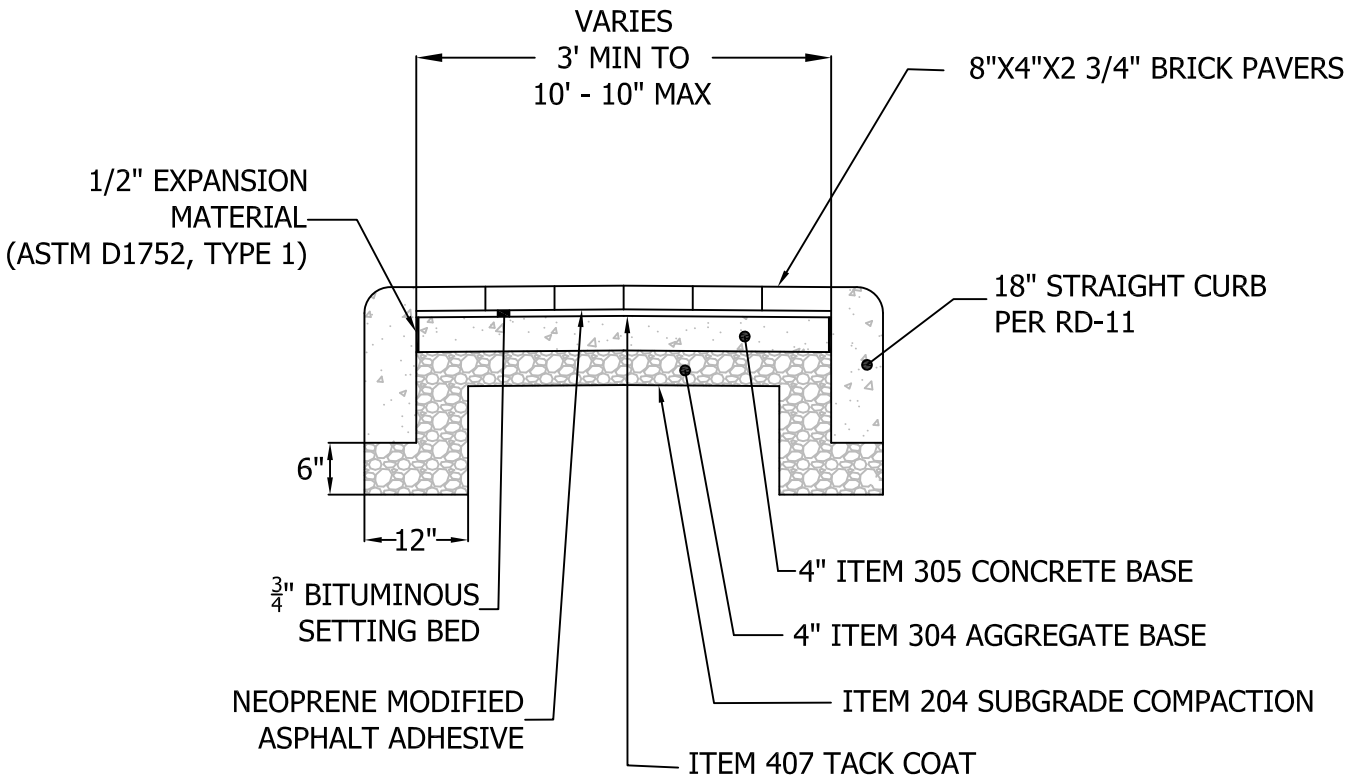

NOTES:

1.) THE PAVERS SHALL BE REGIMENTAL FULL RANGE WITH A CHAMFERED EDGE AND SPACER LUGS, 8″ x 4″ x 2 ¾″, MADE BY BELDEN BRICK COMPANY, CANTON, OHIO, LAID IN A RUNNING BOND PATTERN.

2.) ALL JOINTS SHALL BE FILLED WITH A POLYMERIC SAND. SAND SHALL BE ALLIANCE GATOR MAXX POLYMERIC SAND FOR OVERLAYS AND SLATE GREY IN COLOR OR AN APPROVED EQUAL.

3.) FURNISH NEOPRENE MODIFIED ASPHALT ADHESIVE THAT CONTAINS 2% GRADE WM1 NEOPRENE, OXIDIZED ASPHALT WITH A 150 DEGREE SOFTENING POINT (77 PENETRATION), AND 10% LONG-FIBERED INERT MATERIAL, AS SUPPLIED BY SEIDEL COMPANY, INC., NEWBURYPORT, MA, (617) 649-6740; HASTINGS PAVEMENT COMPANY, INC., LAKE SUCCESS, NY, (516) 379-3500; OR APPROVED EQUAL.

4.) FURNISH ASPHALT CEMENT CONFORMING TO ASTM D 3381, PG64-22. FINE AGGREGATE SHALL BE NATURAL SAND AND/OR STONE SAND COMPOSED OF HARD, DURABLE, UNCOATED PARTICLES, FREE FROM CLAY, SILT, ORGANIC MATERIAL, OR OTHER DELETERIOUS SUBSTANCES. ALL SAND SHALL BE UNIFORMLY GRADED AND PASS A NO. 4 SIEVE, MEETING THE REQUIREMENTS OF ASTM C 136. THE DRIED FINE AGGREGATE SHALL BE MIXED WITH HOT ASPHALT CEMENT AT THE PLANT AND HEATED TO APPROXIMATELY 300 DEGREES (F). APPROXIMATE MATERIAL PROPORTIONS SHALL BE 7% ASPHALT CEMENT AND 93% FINE AGGREGATE; OR 140 LBS ASPHALT TO 1,860 LBS FINE AGGREGATE PER TON.

Date: 05/01/2014

City of Dublin
ENGINEERING

STANDARD DRAWING

BRICK PAVER MEDIAN DETAIL

SHEET 1 OF 1

DRAWING NO. ***RD-14***

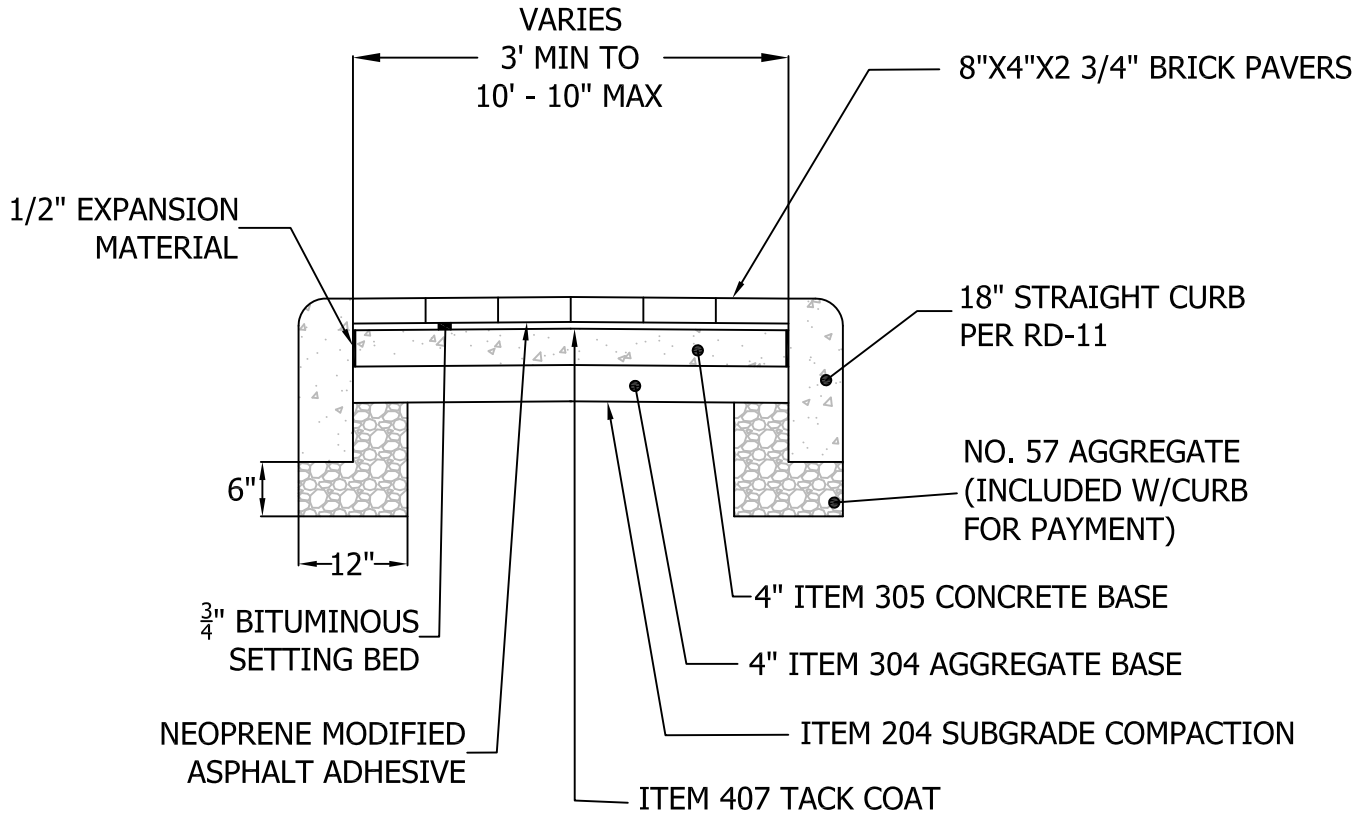

NOTES:

1.) THE PAVERS SHALL BE REGIMENTAL FULL RANGE WITH A CHAMFERED EDGE AND SPACER LUGS, 8″ x 4″ x 2 ¾″, MADE BY BELDEN BRICK COMPANY, CANTON, OHIO, LAID IN A RUNNING BOND PATTERN.

2.) ALL JOINTS SHALL BE FILLED WITH A POLYMERIC SAND. SAND SHALL BE ALLIANCE GATOR MAXX POLYMERIC SAND FOR OVERLAYS AND SLATE GREY IN COLOR OR AN APPROVED EQUAL.

3.) FURNISH NEOPRENE MODIFIED ASPHALT ADHESIVE THAT CONTAINS 2% GRADE WM1 NEOPRENE, OXIDIZED ASPHALT WITH A 150 DEGREE SOFTENING POINT (77 PENETRATION), AND 10% LONG-FIBERED INERT MATERIAL, AS SUPPLIED BY SEIDEL COMPANY, INC., NEWBURYPORT, MA, (617) 649-6740; HASTINGS PAVEMENT COMPANY, INC., LAKE SUCCESS, NY, (516) 379-3500; OR APPROVED EQUAL.

4.) FURNISH ASPHALT CEMENT CONFORMING TO ASTM D 3381, PG64-22. FINE AGGREGATE SHALL BE NATURAL SAND AND/OR STONE SAND COMPOSED OF HARD, DURABLE, UNCOATED PARTICLES, FREE FROM CLAY, SILT, ORGANIC MATERIAL, OR OTHER DELETERIOUS SUBSTANCES. ALL SAND SHALL BE UNIFORMLY GRADED AND PASS A NO. 4 SIEVE, MEETING THE REQUIREMENTS OF ASTM C 136. THE DRIED FINE AGGREGATE SHALL BE MIXED WITH HOT ASPHALT CEMENT AT THE PLANT AND HEATED TO APPROXIMATELY 300 DEGREES (F). APPROXIMATE MATERIAL PROPORTIONS SHALL BE 7% ASPHALT CEMENT AND 93% FINE AGGREGATE; OR 140 LBS ASPHALT TO 1,860 LBS FINE AGGREGATE PER TON.

Date: 05/01/2014

City of Dublin
ENGINEERING

STANDARD DRAWING

BRICK PAVER MEDIAN DETAIL

SHEET 1 OF 1

DRAWING NO. ***RD-15***

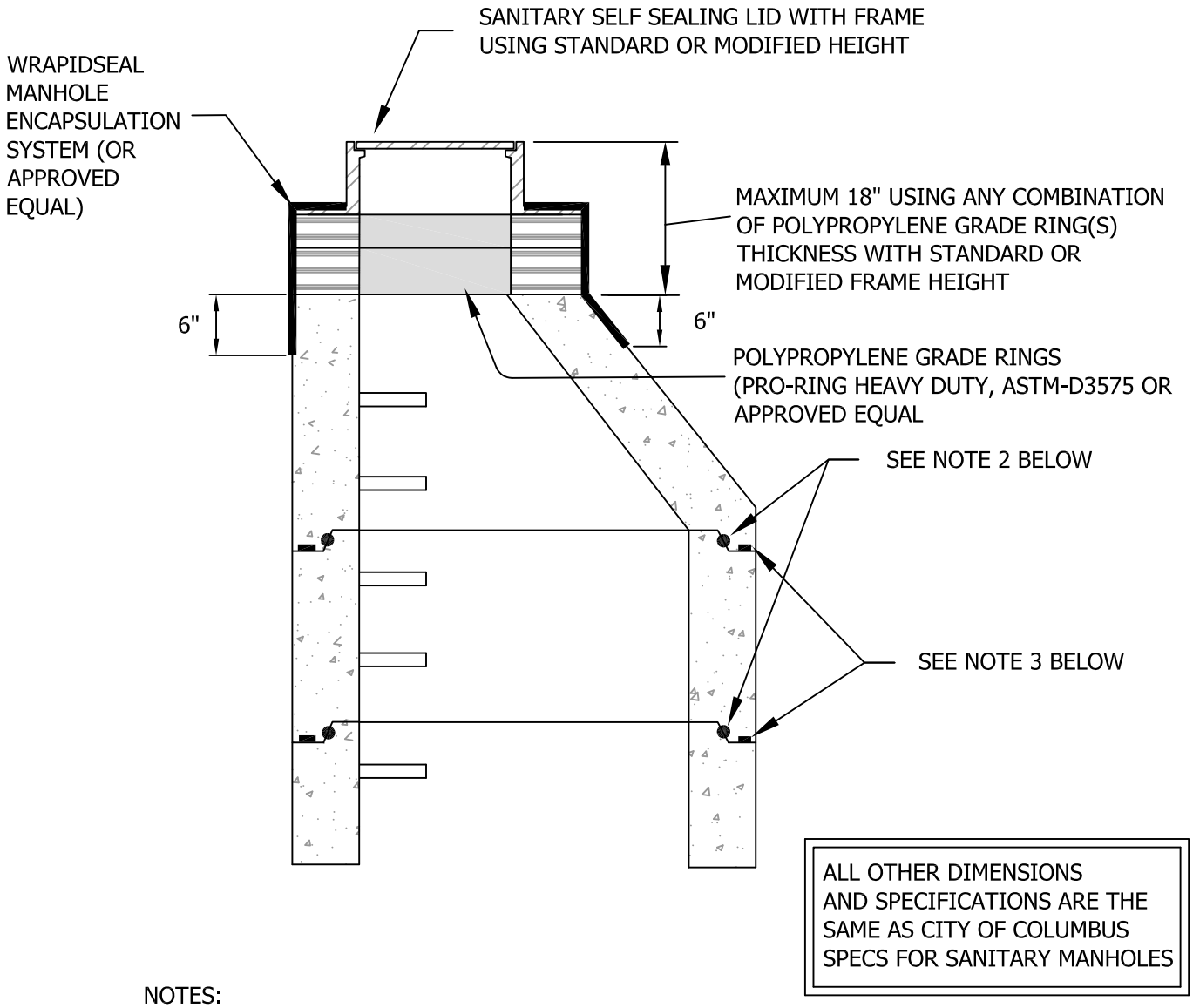

NOTES:

1. CLEAN EACH SURFACE BY WIRE BRUSHING ALL LOOSE CONCRETE DUST AND DIRT. PLACE SEALANT IN A CIRCULAR CONFIGURATION ON EACH CONCRETE SURFACE AND OVERLAP A MINIMUM OF 1/4" AND KNEAD ENDS.

2. CLEAN BELL AND SPIGOT JOINT, APPLY APPROVED LUBRICATION TO JOINT SURFACE AND TO "O" RING; THEN EQUALIZE GASKET TO GROOVE.

3. PLACE 1/2" DIAMETER SEALANT AS MANUFACTURED BY CONCRETE SEALANTS INC., "CONSEAL" OR APPROVED EQUAL ON RISER TOP LEDGE.

Date: 5/1/2014

City of Dublin
ENGINEERING

STANDARD DRAWING

SANITARY MANHOLE DETAILS

SHEET 1 OF 1

DRAWING NO. **SA-01**

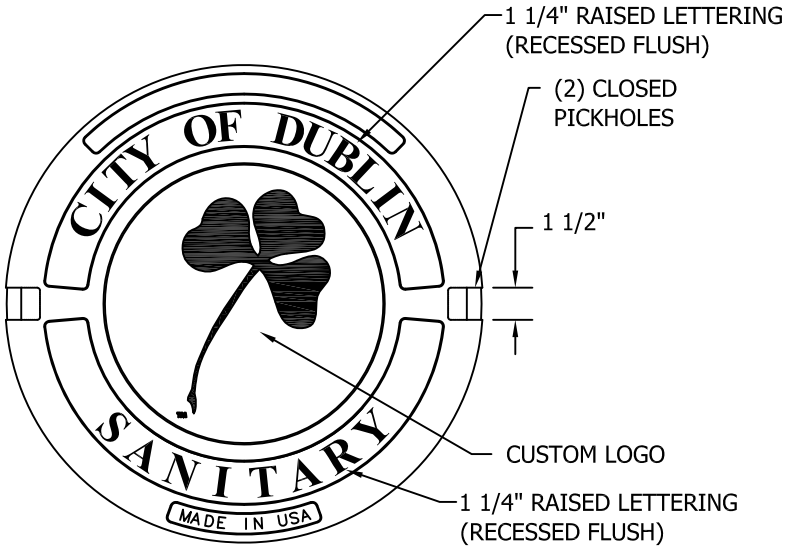

COVER FACE

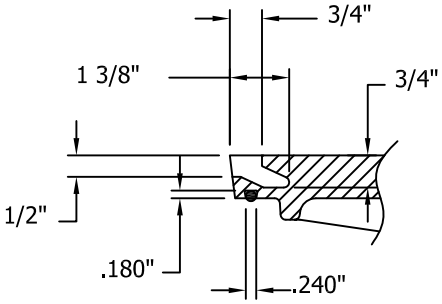

PICK SLOT DETAIL

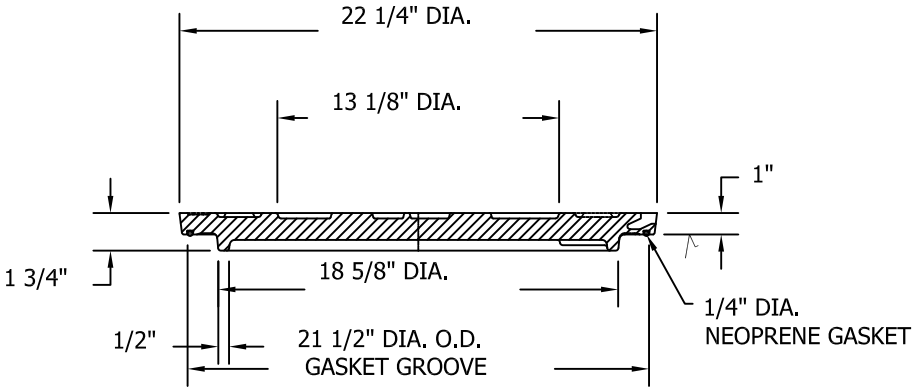

COVER SECTION

Date: 5/1/2014

City of Dublin
ENGINEERING

STANDARD DRAWING

SANITARY MANHOLE LID

SHEET 1 OF 1

DRAWING NO. ***SA-02***

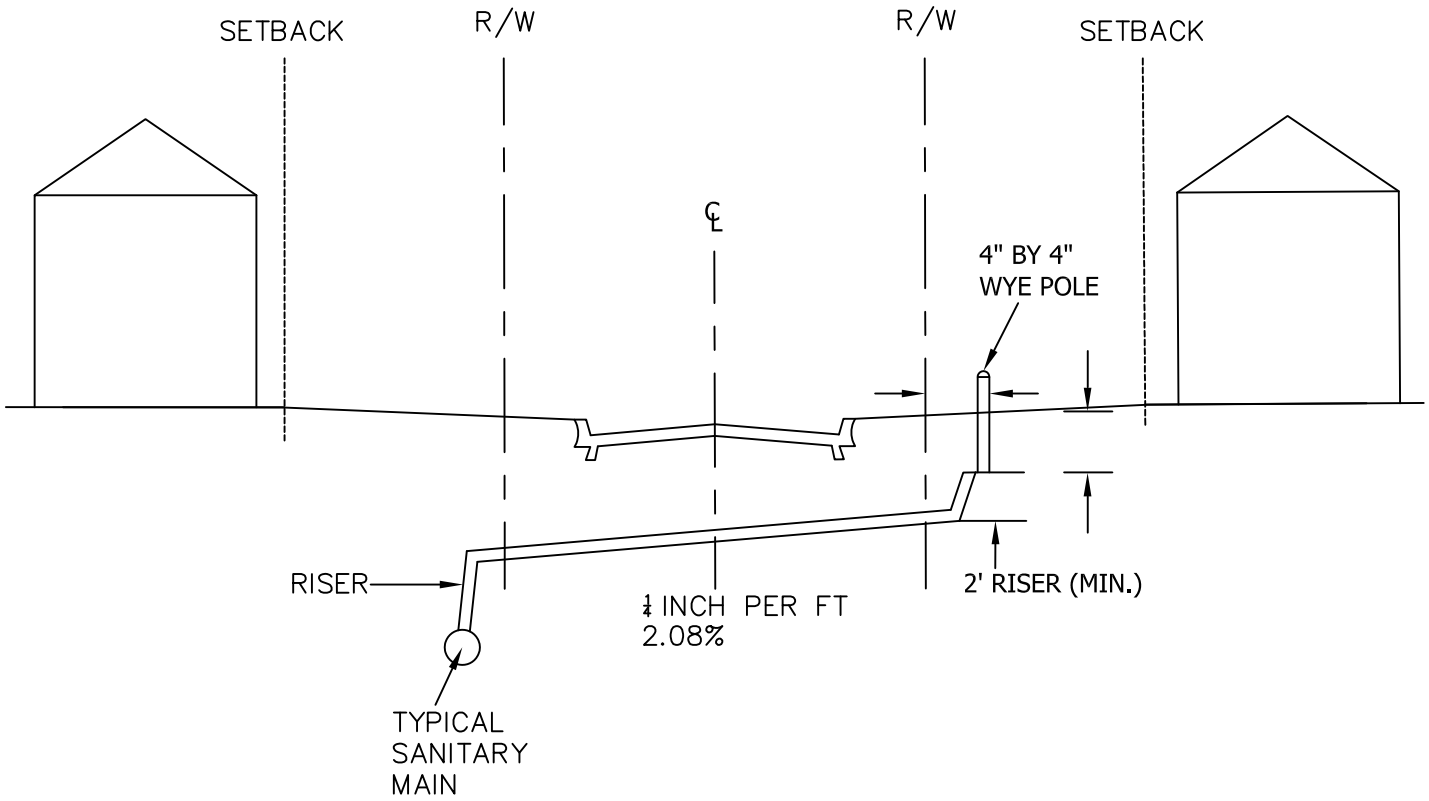

NOTES:
1. FOR LONG SERVICE LATERALS THAT HAVE 4 FEET OF RISER OR GREATER.
2. LATERAL TO BE DESIGNED TO SERVE BASEMENT.

Date: 5/1/2014

City of Dublin
ENGINEERING

STANDARD DRAWING

TYPICAL SANITARY RISER DETAIL

SHEET 1 OF 1

DRAWING NO. ***SA-03***

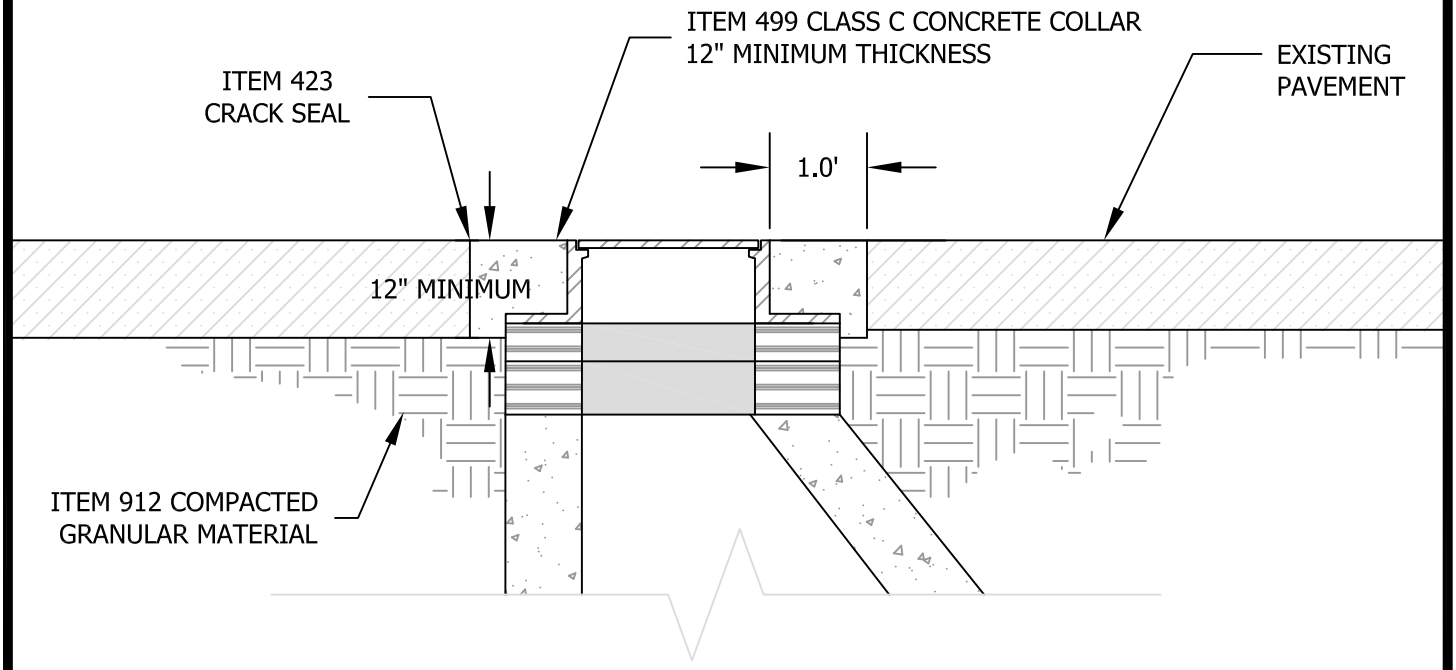

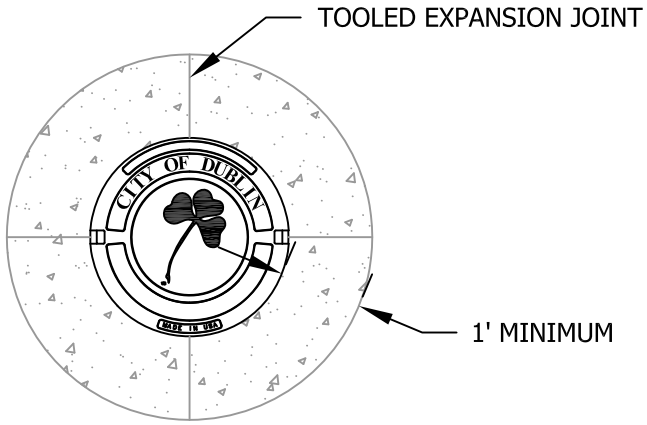

Date: 5/1/2014

City of Dublin
ENGINEERING

STANDARD DRAWING

CONCRETE COLLAR FOR MANHOLES IN PAVEMENT

SHEET 1 OF 1

DRAWING NO. **SA-04**

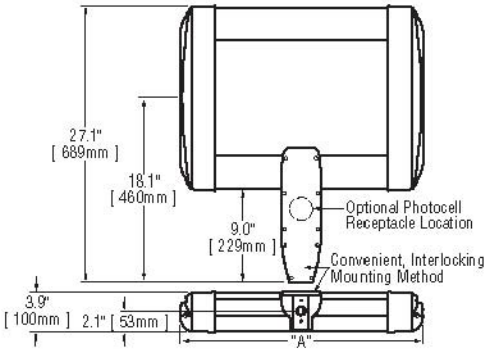

# of LEDs	Dim. "A"
20	12.06"
40	12.06"
60	14.06"
80	16.06"
100	18.06"
120	20.06"
140	22.06"
160	24.06"
180	26.06"
200	28.06"
220	30.06"
240	32.06"

LIGHTING DESIGN CRITERIA
MIN = 0.4 fc
AVG/MIN RATIO = 3:1
MAX/MIN RATIO = 6:1
CROSSWALK AREA = 1.1-1.3 fc

GENERAL DESCRIPTION - LIGHT EMITTING DIODE (LED), TYPE II, III, IV OR V CUTOFF (AS SPECIFIED ON THE CONSTRUCTION DRAWINGS), ONE-PIECE EXTRUDED ARM. OPERATING VOLTAGE SHALL BE ** VOLTS, SINGLE PHASE.

** VOLTAGE REQUIREMENTS ARE TO BE SPECIFIED ON PLANS.

DISTRIBUTION - IES NEMA TYPE II, III, IV OR V CUTOFF.

APPROVED MANUFACTURER
- Cree LED: ARE-EDG-2M-DA-##-D-**-BZ-525-40K
- Cree LED: ARE-EDG-3M-DA-##-D-**-BZ-525-40K
- Cree LED: ARE-EDG-4M-DA-##-D-**-BZ-525-40K
- Cree LED: ARE-EDG-5M-DA-##-D-**-BZ-525-40K

NUMBER OF LED's TO BE SPECIFIED ON PLANS.
** VOLTAGE REQUIREMENTS ARE TO BE SPECIFIED ON PLANS.

CABLE – PROVIDE #10 XHHW, STRANDED COPPER 600V, 90 DEGREES CELSIUS CONDUCTORS. WIRE TO LUMINAIRE. SECURE TO LUMINAIRE ARM WITH CABLE GRIP PROVIDED WITH LUMINAIRE. PROVIDE ADEQUATE LENGTH TO EXTEND MIN. 2 FEET OUT OF HAND HOLE.

EXECUTION – ALL LUMINAIRES SHALL BE PLUMB AND LEVEL. ALL LAMPS SHALL BE OPERATIONAL PRIOR TO INSPECTION. ALL SURFACES SHALL BE CLEANED OF DIRT, DEBRIS, ETC. FREE OF SCRATCHES, DENTS, ETC.

METHOD OF MEASUREMENT - SEE ODOT SPECIFICATIONS SECTION 625.

BASIS OF PAYMENT – SEE ODOT SPECIFICATIONS SECTION 625.

Date: 5/1/2014

City of Dublin
ENGINEERING

STANDARD DRAWING

LUMINAIRE

SHEET 1 OF 1

DRAWING NO. ***SL-01***

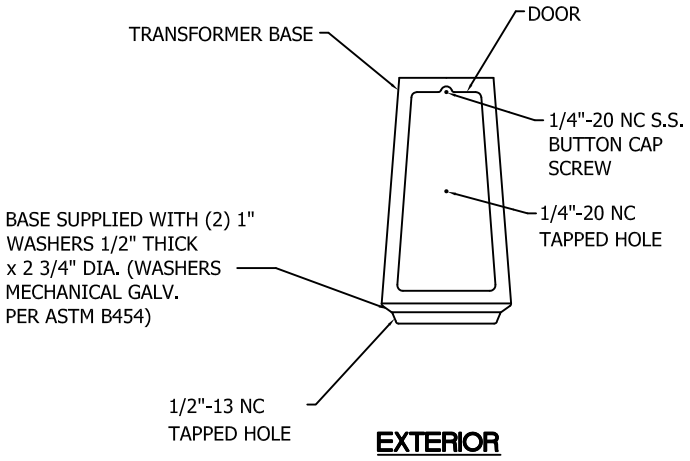

EXTERIOR

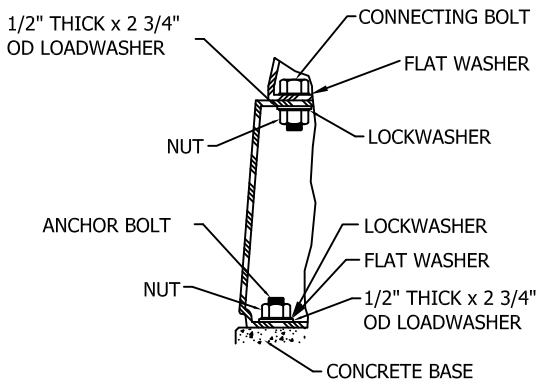

INTERIOR

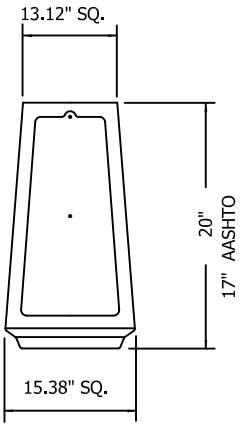

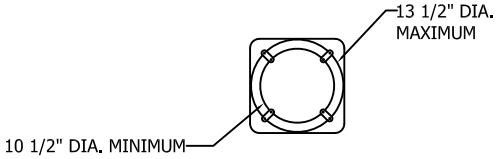

TOP VIEW

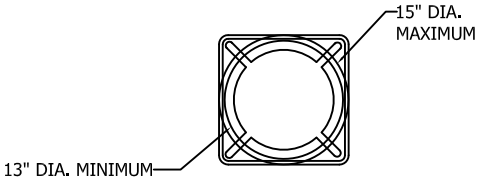

BOTTOM VIEW

TRANSFORMER BASE - PROVIDE A ONE-PIECE CAST ALUMINUM ALLOY 356 BREAKAWAY TRANSFORMER BASE. MINIMUM 20" HIGH WITH A REMOVABLE MATCHING ACCESS DOOR HELD IN PLACE WITH STAINLESS STEEL SCREWS. THE DOOR SHALL BE A MINIMUM OF 13" HIGH, 8" WIDE AT TOP AND 9" AT BOTTOM. DOOR SHALL BE FIELD POSITIONED ON SIDE AWAY FROM ROADWAY. THE BASE SHALL BE DESIGNED TO BE ATTACHED WITH ANCHOR BOLTS PROVIDED WITH A TEMPLATE FOR MOUNTING IN A CONCRETE BASE. PROVIDE A GALVANIZED STEEL HEX-HEAD MACHINE BOLT WITH NUTS AND LOCKWASHERS TO ATTACH POLE BASE FLANGE TO TRANSFORMER BASE. PROVIDE LOAD DISTRIBUTION NON-CORROSIVE WASHERS TO EQUALIZE BOLT FORCES AT FLANGE MATING SURFACES.

GROUNDING - EACH TRANSFORMER BASE SHALL CONTAIN AN INTERNAL LUG WITH DRILLED HOLE FOR ATTACHING A GROUND CONDUCTOR.

Date: 5/1/2014

City of Dublin
ENGINEERING

STANDARD DRAWING

TRANSFORMER BASE

SHEET 1 OF 2

DRAWING NO. ***SL-02***

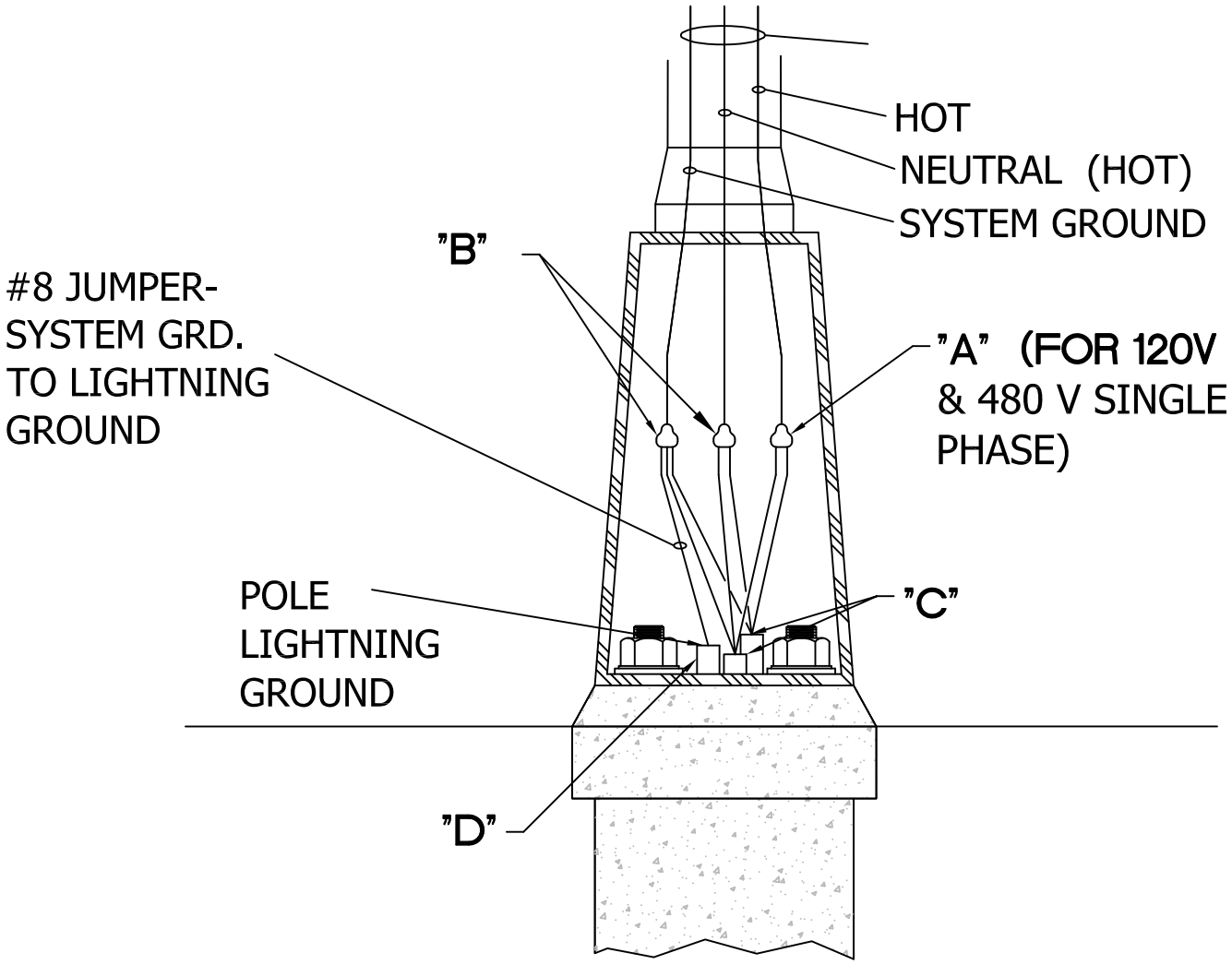

CONNECTIONS

"A" FUSED - INLINE Y CONNECTOR KIT TYPE II WITH WATERPROOF BOOTS AND BREAKAWAY RECEPTACLE. FUSE AT 5 AMPS, ELASTIMOLD STYLE 82 SERIES OR HOMAC FY SERIES, BUSS KTK-R FUSE. (SINGLE PHASE =1, DOUBLE PHASE = 2 PER POLE)

"B" UNFUSED-INLINE 7 CONNECTOR KIT TYPE III WITH WATERPROOF BOOTS AND BREAKAWAY RECEPTACLE, ELASTIMOLD 83 SERIES OR HOMAC DY SERIES. (SINGLE PHASE =2, DOUBLE PHASE = 1 PER POLE)

"C" PROVIDE MOLDED PLASTIC OR RUBBER CAPPING DEVICE THAT ONLY PERMITS WIRE PASS THROUGH WHILE PREVENTING DIRT, WATER, ETC. ENTRY.

"D" POLE LIGHTNING GROUND LUG UNINSULATED COPPER COMPRESSION TERMINAL UL LISTED FOR 600V. SIZE FOR WIRE SPECIFIED. DRILL, TAP, AND BOLT TO TRANSFORMER BASE BURNDY YA SERIES. BOND SYSTEM GROUND TO LIGHTNING ROD GROUND.

PROVIDE 2' SLACK IN ALL WIRING TO BRING CONNECTORS AND FUSE HOLDERS OUT THRU HANDHOLE.

Date: 5/1/2014

City of Dublin
ENGINEERING

STANDARD DRAWING

TRANSFORMER BASE

SHEET 2 OF 2

DRAWING NO. ***SL-02***

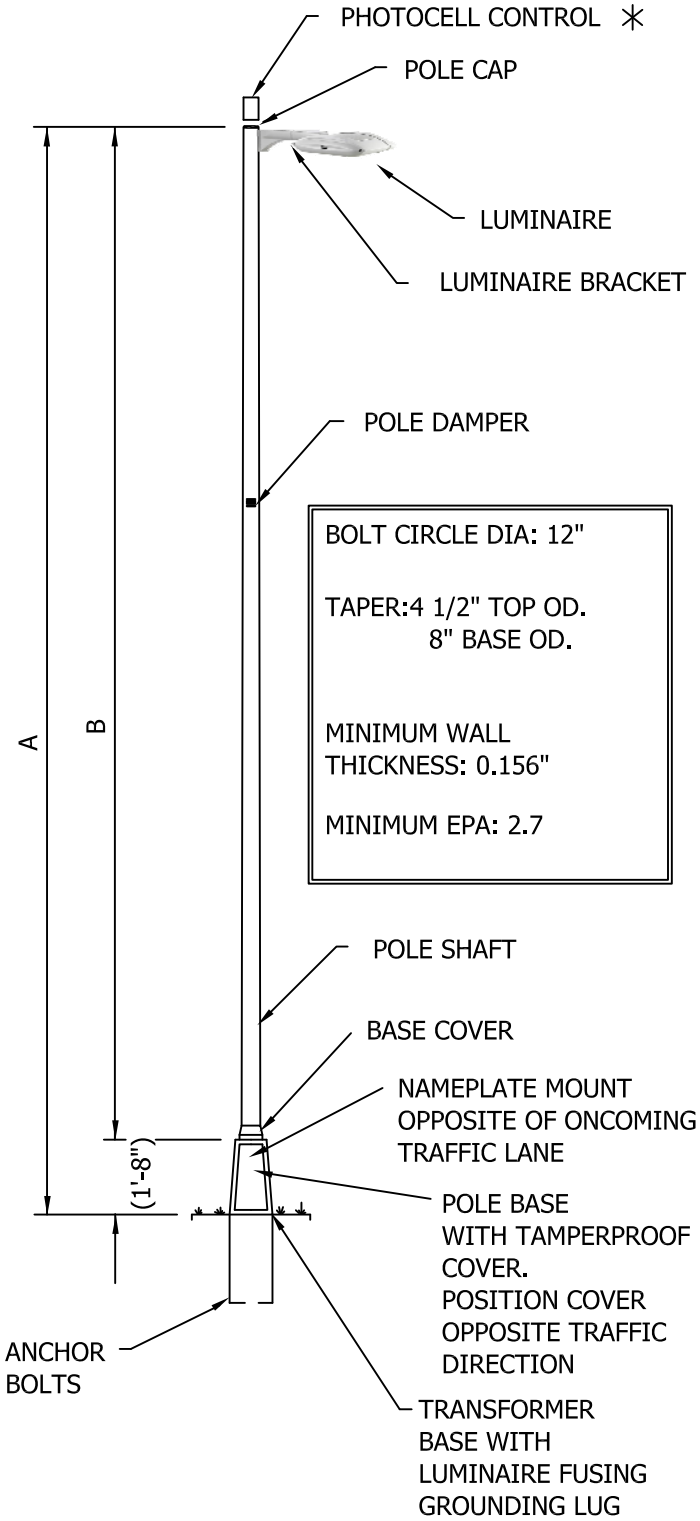

* ONE PHOTOCELL REQUIRED PER CIRCUIT

POLE DIMENSION	A	B
TYPE 1	36'-8"	35'-0"
TYPE 2	31'-8"	30'-0"
TYPE 3	26'-8"	25'-0"

GENERAL DESCRIPTION - ALUMINUM ROUND TAPERED ANCHOR BASE WITH FINISH: A DARK BRONZE APPROVED BY THE CITY ENGINEER. THE PAINT SHALL BE A POWDER PAINT FINISHED TO A GLOSS OF 35% (AT 60 DEGREES) SPUN ALUMINUM FINISH WITH POLE CAP, TRANSFORMER BASE, BASE COVER AND BOLT COVERS.

POLE CAP - PROVIDE AN ORNAMENTAL ALUMINUM ALLOY CAP FASTENED VIA STAINLESS STEEL SCREWS.

POLE DAMPER - PROVIDE A SECOND MODE VIBRATION DAMPER ATTACHED TO MIDPOINT VIA WELDING. LOCATE INSIDE POLE. FACTORY INSTALLED.

BASE FLANGE - PROVIDE A ONE PIECE CAST SOCKET OF ALUMINUM ALLOY 356 THE FLANGE SHALL BE JOINED TO THE SHAFT BY MEANS OF CONTINUOUS WELD EXTERNALLY AND INTERNALLY.

BASE COVER - PROVIDE BOLT COVERS OF ALUMINUM ALLOY 43 AND STAINLESS STEEL SCREWS FOR ATTACHMENT.

MISCELLANEOUS HARDWARE - ALL NUTS, BOLTS, AND WASHERS USED IN THE FABRICATION OF THE POLE SHALL BE GRADE 18-8 STAINLESS STEEL EXCEPT FOR ANCHORAGE HARDWARE.

WRAPPING - EACH POLE SHAFT SHALL BE WRAPPED WITH PROTECTIVE PAPER SECURED IN PLACE. ALL PARTS SHALL BE BOXED AND/OR BANDED.

POLE SHAFT - THE SHAFT SHALL BE ONE-PIECE SEAMLESS WITH A MINIMUM WALL THICKNESS OF 0.156 INCHES, ROUND TAPERED TUBE OF ALLOY 6063 AND SHALL BE FULL-LENGTH TEMPERED AFTER WELDING ON TOP BASE FLANGE TO PRODUCE THE T6 TEMPER. THE ENTIRE POLE ASSEMBLY SHALL BE RATED @ 90 MPH WITH A 30% GUST FACTOR FOR AN EPA. MINIMUM OF 2.7 TEMPLATE CUT FOR LUMINAIRE.

APPROVED MANUFACTURER - HAPCO SERIES 52, LEXINGTON/VALMONT OR APPROVED EQUAL.

Date: 5/1/2014

City of Dublin
ENGINEERING

STANDARD DRAWING

LIGHT POLE

SHEET 1 OF 1

DRAWING NO. ***SL-03***

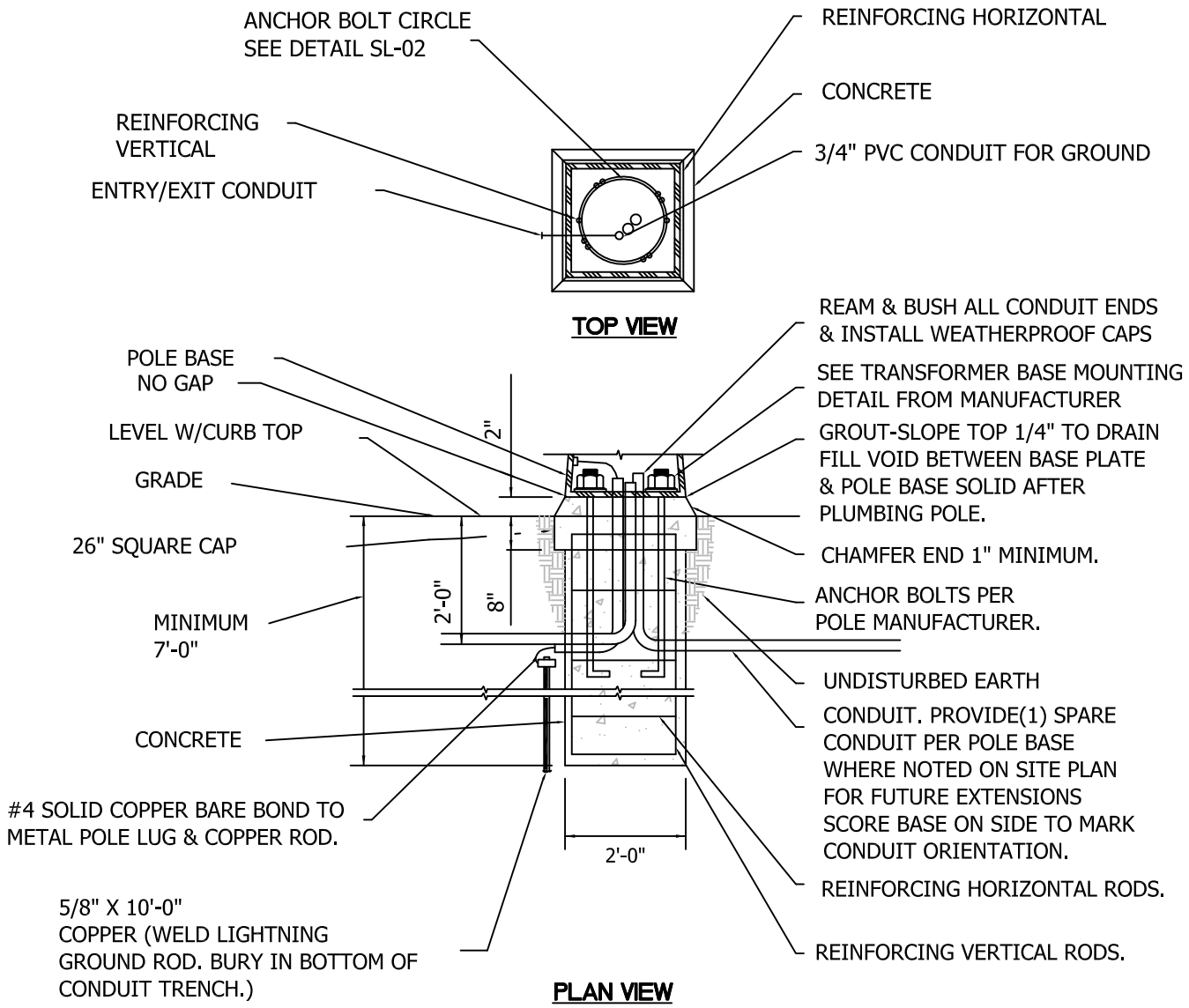

CONCRETE - CLASS C, 4000 PSI, 5-7% AIR ENTRAINED. FILL ALL EXPOSED SURFACE VOIDS. CHAMFER ALL EDGES, SLOPE TOP 1/4" WITH GROUT TO DRAIN WATER (FILL VOID BETWEEN BASE PLATE & POLE BASE SOLID, AFTER PLUMBING POLE), ADJUST SO TRANSFORMER BASE HAS NO GAP TO GROUTED SURFACE. HOT OR COLD WEATHER - FOLLOW ODOT CONSTRUCTION & MATERIAL SPECIFICATIONS SECTION 625.

CONCRETE FINISH - REMOVE ALL FORM MARKS, HAND RUB EXPOSED TOP AND SIDES WITH CARBIDE STONE.

REINFORCING - ASTM A-615 GRADE 60, TYPE S DEFORMED BILLET: #6 VERTICALS, (6 TOTAL), #4 HORIZONTALS 12" O.C., CIRCULAR FORMED. WIRE TIE ALL CONNECTIONS, MAINTAIN 3" MINIMUM CONCRETE COVER.

GROUNDING - PROVIDE 5/8" X 10'-0" COPPER WELD ONE-PIECE GROUND ROD. DRIVE A MINIMUM OF 2'-0" BELOW GRADE. RUN #4 AWG SOLID COPPER GROUNDING ELECTRODE CONDUCTOR IN 3/4" PVC CONDUIT FROM ROD TO ENCLOSURE GROUND BAR. "CAD" WELD WIRE CONNECTION AT ROD.

Date: 5/1/2014

City of Dublin
ENGINEERING

STANDARD DRAWING

POLE FOUNDATION

SHEET 1 OF 2

DRAWING NO. ***SL-04***

LUMINAIRE FUSING - REFER TO TRANSFORMER BASE DETAIL SL-02

GROUNDING LEG - REFER TO TRANSFORMER BASE DETAIL SL-02

ANCHORAGE - PROVIDE A SET OF FOUR-50,000 PSI-MIN YIELD STEEL STRENGTH ANCHOR BOLTS, THREADED, HOT-DIPPED GALVANIZED AT THE THREADED END FOR AT LEAST 10". THE BOLTS SHALL INCLUDE A 4" MINIMUM RIGHT ANGLE HOOK AT THE UNTHREADED END. PROVIDE GALVANIZED NUT, LOCKWASHERS AND FLATWASHERS FOR EACH BOLT.

GROUT - 10,000 PSI, HIGH STRENGTH, NON-SHRINK, NON-METALLIC, COMPLY WITH CRD-C-621, PROVIDE SAND COAT FINISH (PROVIDE SONNOGROUT OR APPROVED EQUAL).

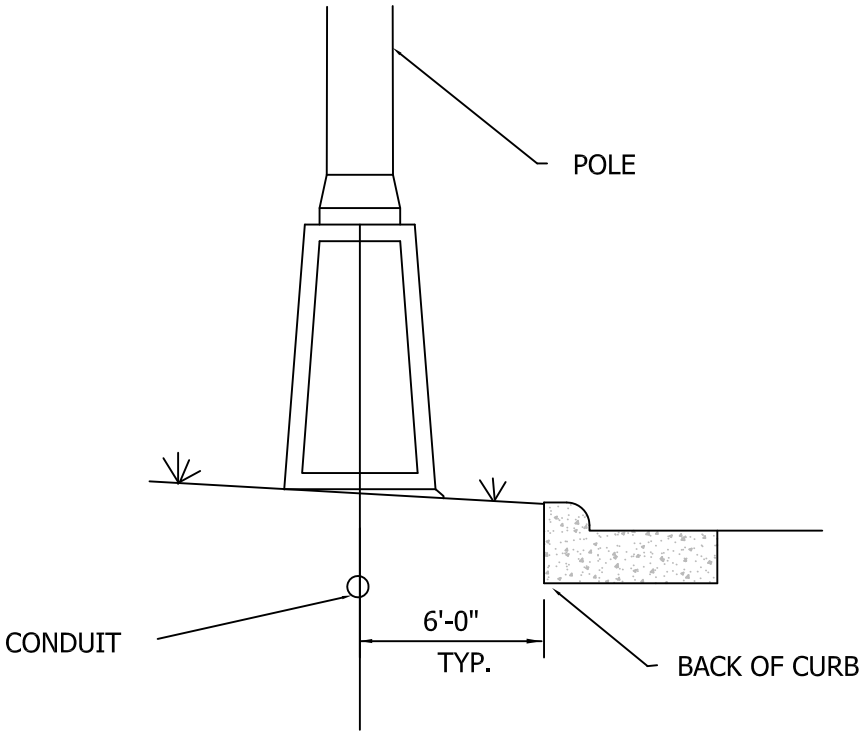

TYPICAL FOUNDATION LOCATION

WEATHERPROOFING - PROVIDE PENETRATING SURFACE APPLIED, 1 COAT CONCRETE WATERPROOFING AGENT. MATERIAL SHALL BE CLEAR PENETRATING, WATER BASED, ALKYALKOXYSILANE AND CONTAIN A MINIMUM OF 40% BY WEIGHT SOLIDS AND BE APPLIED PER MANUFACTURER'S DIRECTIONS. COVERAGE SHALL BE 150 SQ. FEET PER GALLON (PROVIDE HYDROZO ENVIROSEAL 40 OR APPROVED EQUAL). APPLY 1 COAT TO ALL CONCRETE EXPOSED SURFACES ABOVE GRADE.

FIELD CONDITIONS - CONSULT ENGINEER FOR ABNORMAL SOIL CONDITIONS SILTS AND CLAY WITH WATER LIMITS GREATER THAN 50%, HIGH ORGANIC SOILS, SHALLOW BEDROCK, ETC.

CONDUIT - SHALL BE HEAVY WALL 2" OR 3/4" PER GRAPHIC. RIGID NON-METALLIC SCHEDULE 40 PVC FOR USE ABOVE & BELOW GROUND OR CONCRETE ENCASED. RATED FOR 90 DEGREES CELSIUS CONDUCTORS AND USE IN DIRECT SUNLIGHT. MATERIAL SHALL BE UL LISTED AND COMPLY WITH NEMA TC2-1978 AND F.S. #WC-1094A. PROVIDE IN 10 FOOT SECTIONS. SEAL ALL JOINTS WATERTIGHT. GLUE JOINTS WITH PVC CEMENT. BUSH ALL ENDS. ALL BENDS SHALL USE LONG RADIUS PREFORMED ELBOWS. EXTEND CONDUIT TO MINIMUM 2'-0" BELOW GRADE. LOCATION TO BE COORDINATED WITH LANDSCAPING AND UTILITIES.

IF UNIT TYPE DUCT CABLE IS UTILIZED IN TRENCHES IN LIEU OF PVC CONDUIT, AT POLE FOUNDATIONS RETAIN THE PVC CONDUIT SPECIFIED ABOVE IT SHALL FUNCTION AS A SLEEVE FOR THE DUCT CABLE. OVERSIZE PVC CONDUIT EITHER 2 1/2" OR 3" AS REQUIRED BASED ON DUCT CABLE OUTSIDE DIAMETER.

CONDUIT CAPS - TERMINAL POINTS OF ALL CONDUIT AND DUCT CABLE SHALL BE SEALED PROMPTLY AFTER INSTALLATION BY MEANS OF A MOLDED PLASTIC OR RUBBER CAPPING DEVICE THAT ONLY PERMITS WIRE PASS THROUGH.

Date: 5/1/2014

City of Dublin
ENGINEERING

STANDARD DRAWING

POLE FOUNDATION

SHEET 2 OF 2

DRAWING NO. ***SL-04***

* NO SPLICING OF DISTRIBUTION CABLE LESS THAN 500 FEET IN LENGTH.

TRENCHING - CONDUIT TRENCHES SHALL HAVE VERTICAL WALLS AND BE EXCAVATED TO A DEPTH THAT PERMITS CONDUIT TO BE LAID AT 2'-0" BELOW FINISH GRADE WITH A GRAVEL COVER, ABOVE AND BELOW. BACKFILL GRAVEL TO TOPSOIL LIMIT. TRENCHES SHALL BE LOCATED ADJACENT TO AND PARALLEL WITH CURBS OR PAVEMENTS AND SHALL NOT DEVIATE MORE THAN 6" FROM THE LINES DESIGNATED. TRENCHES SHALL NOT EXCEED 12" IN WIDTH. REMOVE EXCESS SOIL AFTER BACKFILLING.

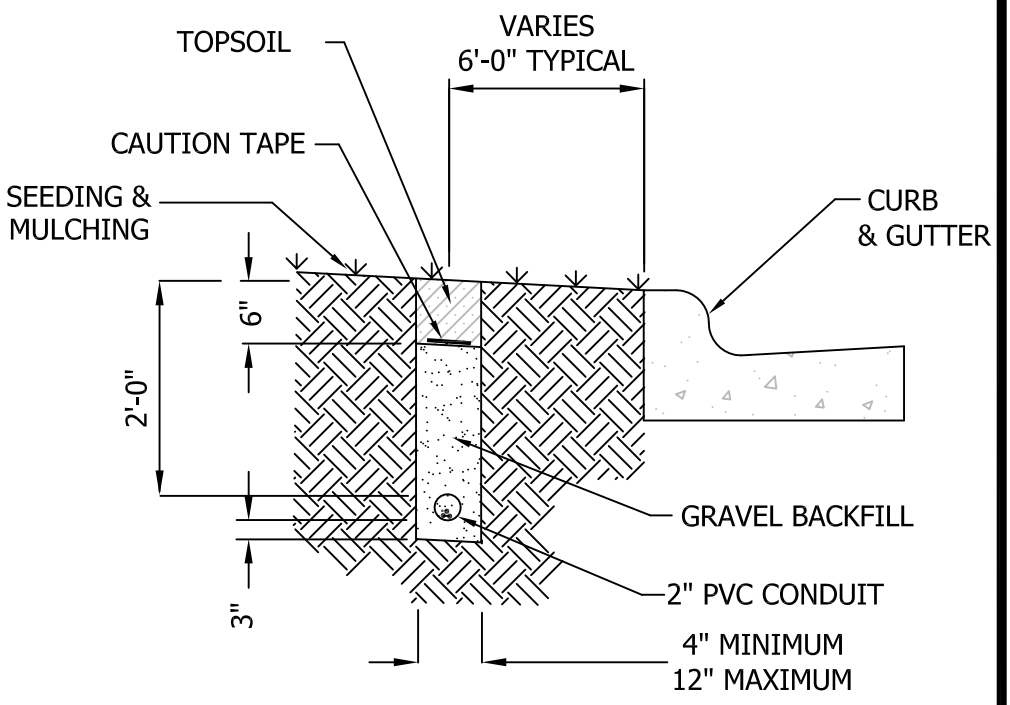

GRAVEL - SHALL BE UNCRUSHED WASHED GRAVEL AND PASS A 1/2" SIEVE. POUR IN PLACE AND COMPACT TO 95% STANDARD PROCTOR IN LAYERS NOT EXCEEDING 6" EACH.

TOPSOIL - FOR BACKFILLING SHALL BE CLEAN, LOOSE FRIABLE, LOAMY TOPSOIL FREE OF SUBSOIL OR REFUSE. TOPSOIL MAY BE FROM THE SITE OR IMPORTED. TOPSOIL SHALL BE PLACED AND SPREAD OVER THE AREAS DESIGNATED TO A DEPTH SUFFICIENTLY GREATER THAN THAT SHOWN SO THAT AFTER NATURAL SETTLEMENT THE COMPLETED WORK WILL CONFORM TO THE ELEVATIONS SHOWN.

SEEDING AND MULCHING - SHALL COMPLY WITH CITY OF COLUMBUS, OHIO CONSTRUCTION AND MATERIAL SPECIFICATIONS SECTION 659.

CONDUIT - SHALL BE HEAVY WALL RIGID NON-METALLIC SCHEDULE 40 PVC FOR USE ABOVE AND BELOW GROUND OR CONCRETE ENCASED. RATED FOR 90 DEGREES CELSIUS CONDUCTORS AND USE IN DIRECT SUNLIGHT. MATERIAL SHALL BE UL LISTED AND COMPLY WITH NEMA TC2-1978 AND F.S. #WC-1094A. PROVIDE IN 10 FOOT SECTIONS. SEAL ALL JOINTS WATERTIGHT. GLUE JOINTS WITH PVC CEMENT. BUSH ALL ENDS. ALL BENDS SHALL USE LONG RADIUS PREFORMED ELBOWS.

CONDUIT CAPS - PROVIDE MOLDED PLASTIC OR RUBBER CAPPING DEVICE THAT ONLY PERMITS WIRE TO PASS THROUGH WHILE PREVENTING DIRT, WATER, ETC. FROM ENTERING.

PULL WIRE - ALL EMPTY CONDUIT INSTALLED FOR FUTURE LIGHTING SHALL CONTAIN A NO. 10 AWG COPPER-CLAD OR ALUMINUM-CLAD PULL WIRE.

WIRING - DISTRIBUTION CABLE SHALL BE #4 AWG XHHW (WET RATED) STRANDED COPPER 600V, 90 DEGREES CELSIUS CONDUCTORS. USE #6 IN APPROPRIATE CONDITIONS. SYSTEM GROUND CABLE SHALL BE #4 AWG FOR POLE TO POLE APPLICATIONS.

METALIZED CAUTION TAPE - 3" (79mm) WIDE RED PLASTIC TAPE WITH BLACK LETTERS READING "CAUTION BURIED ELECTRIC LINE BELOW". BURY ABOVE CONDUIT 6" (158mm) MAX. BELOW GRADE. RUN CONTINUOUS IN ALL TRENCHES NOT COVERED BY PAVEMENT.

Date: 5/1/2014

City of Dublin
ENGINEERING

STANDARD DRAWING

TRENCHES

SHEET 1 OF 3

DRAWING NO. ***SL-05***

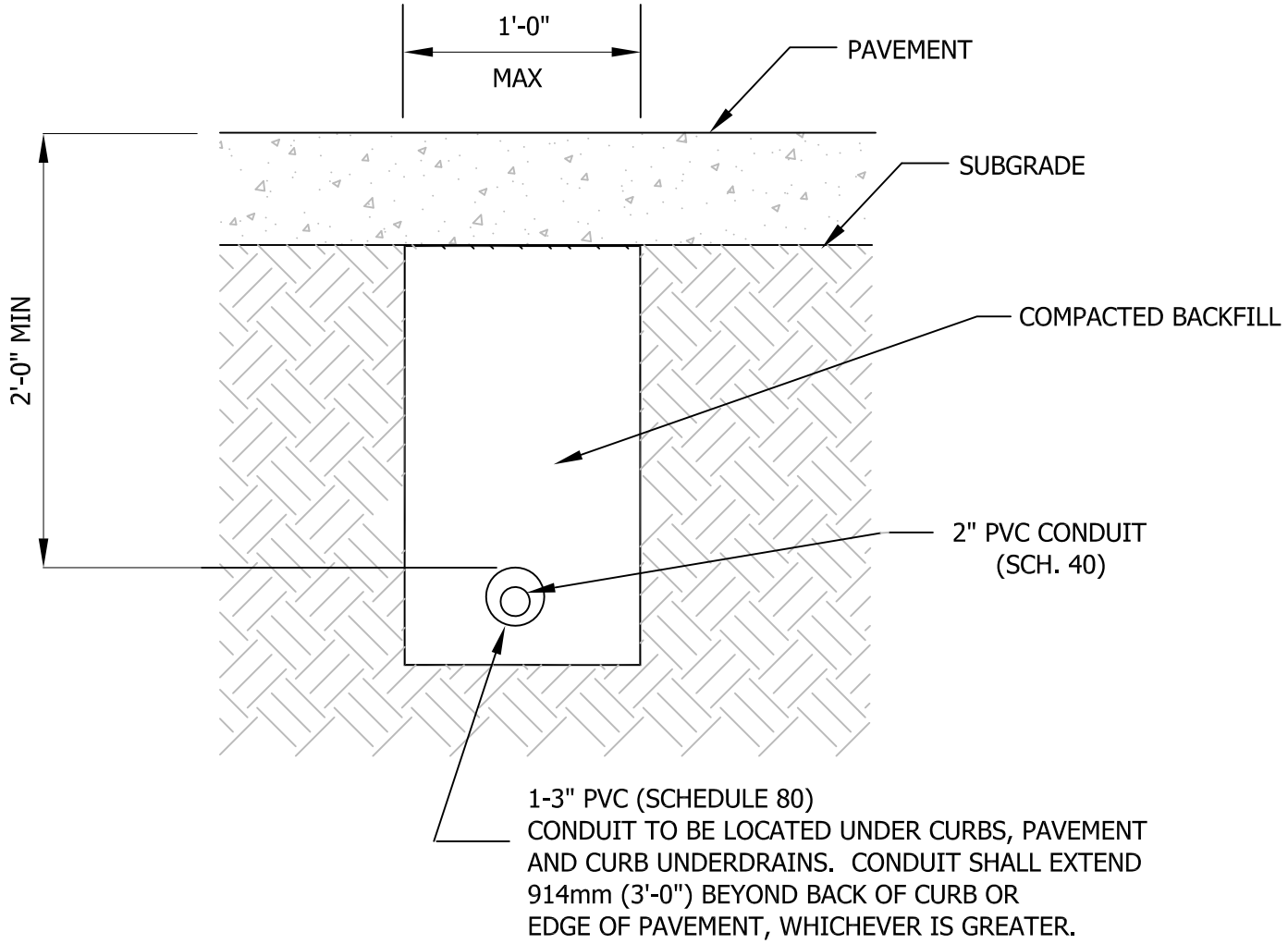

CONDUIT SLEEVE CROSSING PROPOSED PUBLIC ROADWAYS AND COMMERCIAL DRIVEWAYS

GENERAL - CONDUIT SLEEVES SHALL BE PROVIDED WHERE STREET LIGHTING CABLES CROSS ROADWAYS. CONDUIT SLEEVES SHALL ALSO BE PROVIDED UNDER ALL PROPOSED COMMERCIAL DRIVEWAYS.

TRENCHING - TRENCHES SHALL HAVE VERTICAL WALLS AND BE EXCAVATED TO A DEPTH THAT PERMITS CONDUIT SLEEVE TO BE PLACED 2'-0" (610mm) BELOW FINISH GRADE. TRENCH SHALL BE LOCATED PERPENDICULAR TO THE CENTERLINE OF ROADWAYS AND COMMERCIAL DRIVEWAYS UNLESS OTHERWISE SPECIFICALLY NOTED. MAINTAIN INLINE WITH CONDUIT SETBACK DIMENSIONS AT INTERSECTIONS AND CURB CUTS.

BACKFILL - SHALL COMPLY WITH CITY OF COLUMBUS, OHIO CONSTRUCTION AND MATERIAL SPECIFICATIONS ITEM 613, TYPE 2 OR ITEM 912 COMPACTED GRANULAR BACKFILL.

MATERIALS - SHALL COMPLY WITH ODOT CONSTRUCTION AND MATERIAL SPECIFICATIONS SECTION 725.05.

Date: 5/1/2014

City of Dublin
ENGINEERING

STANDARD DRAWING

TRENCHES

SHEET 2 OF 3

DRAWING NO. ***SL-05***

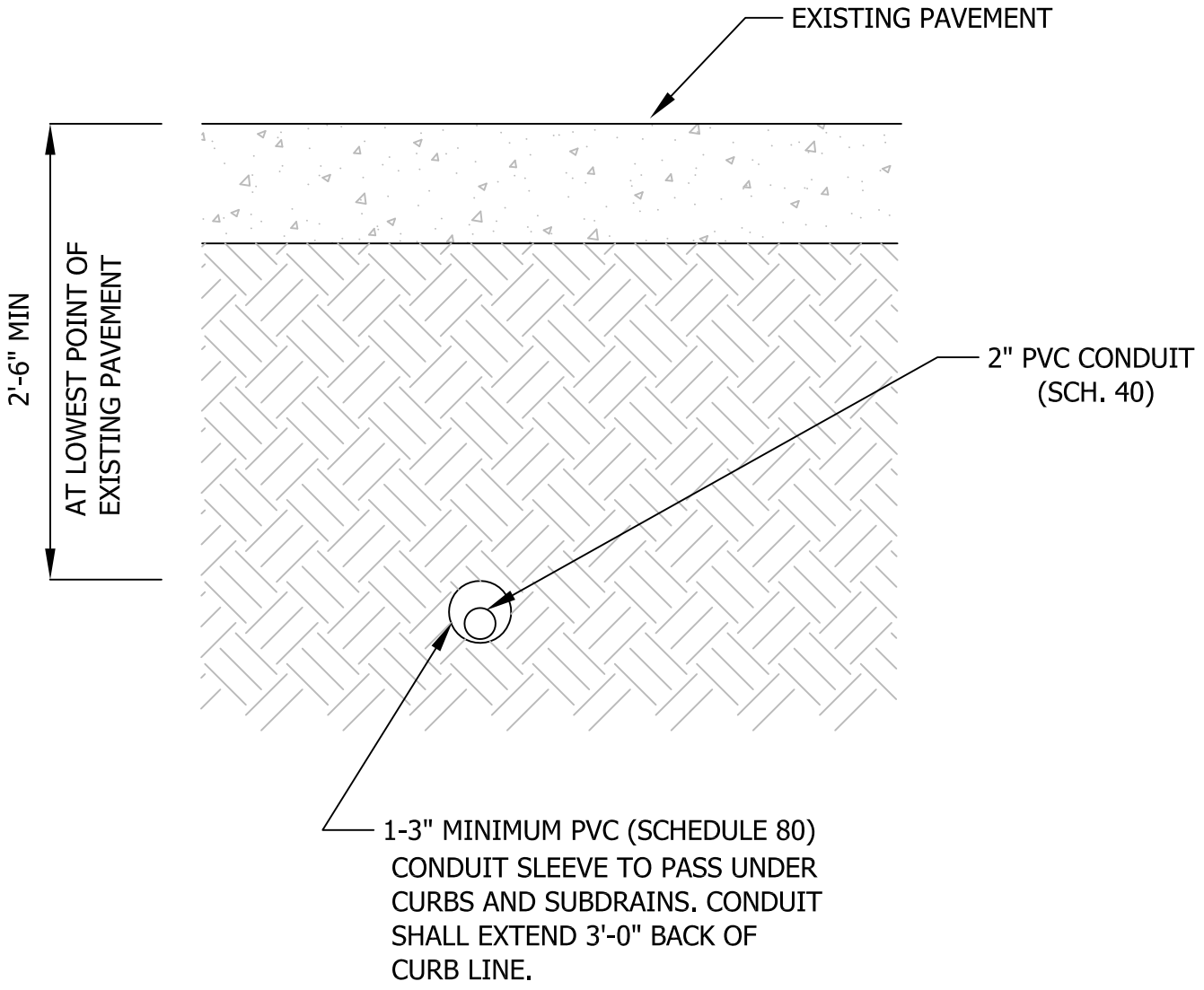

CONDUIT SLEEVES UNDER EXISTING PAVEMENT

CONDUIT SLEEVES PLACED UNDER EXISTING PAVEMENT OR PAVED SHOULDERS SHALL BE INSTALLED BY DRILLING, SUBJECT TO THE APPROVAL OF THE CITY ENGINEER. IF PLACED BY DRILLING, THE BORE SHALL NOT EXCEED THE CONDUIT DIAMETER BY MORE THAN (5) PERCENT. CONDUIT SHALL BE PLACED WITH A MINIMUM AMOUNT OF DISTURBANCE TO THE ROADWAY. CONDUIT SLEEVES SHALL BE GALVANIZED STEEL CONDUIT SIZED AS SHOWN WITH FITTINGS FURNISHED MEETING THE REQUIREMENTS OF ANSI C 80.1, C80.4, AND UL 6 FOR TYPE 1 RIGID STEEL CONDUIT. EACH LENGTH SHALL BEAR THE UL LABEL. CONTRACTOR WILL OBTAIN A "PERMIT TO WORK IN EXISTING STREET PUBLIC WAY" FROM THE DIVISION OF ENGINEERING, CITY OF DUBLIN.

Date: 5/1/2014

City of Dublin
ENGINEERING

STANDARD DRAWING

TRENCHES

SHEET 3 OF 3

DRAWING NO. ***SL-05***

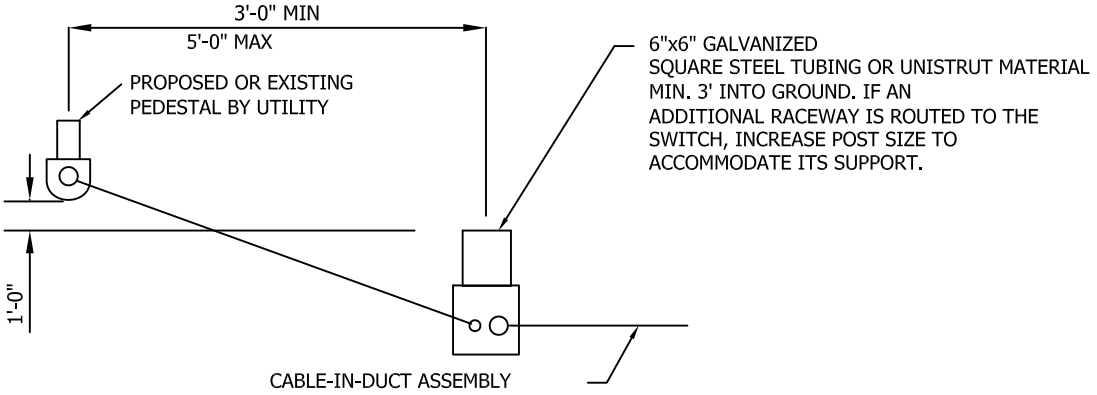

PLAN

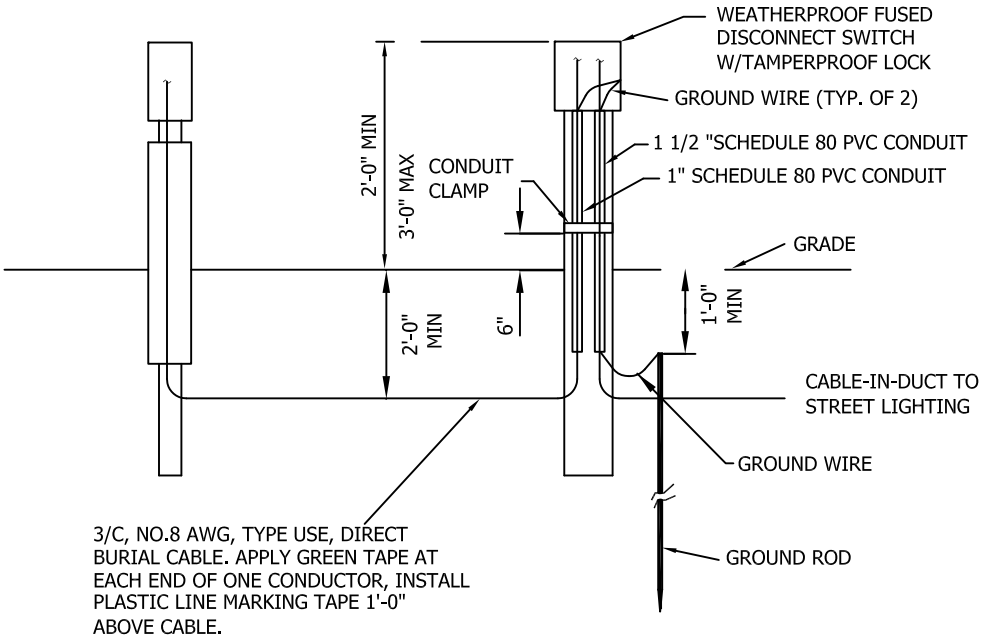

ELEVATION

THE CIRCUIT DISCONNECT SHALL BE A GENERAL DUTY, FUSIBLE TYPE SWITCH IN A NEMA NO. 4/4X ENCLOSURE.

A. MANUFACTURER: THE SWITCH SHALL BE GENERAL ELECTRIC NO. TH3221SS.

B. SWITCH RATING: THE SWITCH SHALL BE RATED AT 30 AMPS, 240 VOLTS, 3 POLE.

C. FUSES: FUSES SHALL BE UL CLASS RK-1, REJECTION TYPE.

D. LOCKS: EACH SWITCH SHALL BE LOCKABLE AND SHALL BE PROVIDED WITH A FARGO NO. GM-303 TAMPERPROOF LOCK WITH SHEAR OFF LOCKING SCREW.

NOTES:

1. ATTACH NO.6 CONDUCTORS TO LOAD TERMINALS VIA SHORT LENGTHS OF N0.8 CONDUCTORS & APPROPRIATE COMPRESSION CABLE JOINT.

2. NO MORE THAN 2 N0.6 CONDUCTORS SHALL BE CONNECTED TO EACH N0.8 CONDUCTOR.

Date: 5/1/2014

City of Dublin
ENGINEERING

STANDARD DRAWING

QUICK DISCONNECT

SHEET 1 OF 1

DRAWING NO. ***SL-06***

SAMPLE SCHEDULE

ITEM	DESCRIPTION	TOTAL	UNIT
625	CONNECTOR KIT, TYPE II, FUSED (1 PER POLE)		EA
625	CONNECTOR KIT, TYPE III, UNFUSED (2 PER POLE)		EA
625	CABLE SPLICE KITS		EA
625	TRANSFORMER BASE		EA
625	LIGHT POLE, 35'-0", GENERAL STREET LIGHT		EA
625	LIGHT POLE FOUNDATION, 24"x7', A.P.P.		EA
625	POLE AND BRACKET CABLE (#10 AWG, 600V)		LF
625	DISTRIBUTION CABLE (#4 AWG, 600V)		LF
625	GROUND CONDUCTOR (#4 AWG, SOLID, CU, XHHW)		LF
625	CONDUIT, 2" PVC, 725.05 (PVC SCH.40)		LF
625	CONDUIT SLEEVE UNDER PAVEMENT, 3" SLEEVE,		LF
	725.05 (SCH 80)		
625	LUMINAIRE, MISC.:100 LED, TYPE III MEDIUM, A.P.P.		EA
625	TRENCH		LF
625	PULL BOX, 725.06 (18"x11"x18")		EA
625	GROUND ROD		EA
625	CADWELD CONNECTION		EA
625	PLASTIC, METALIZED CAUTION TAPE		LF
625	HIGH VOLTAGE TEST, APP		LUMP

Date: 5/1/2014

City of Dublin
ENGINEERING

STANDARD DRAWING

SAMPLE LIGHTING QUANTITIES SCHEDULE

SHEET 1 OF 1

DRAWING NO. ***SL-07***

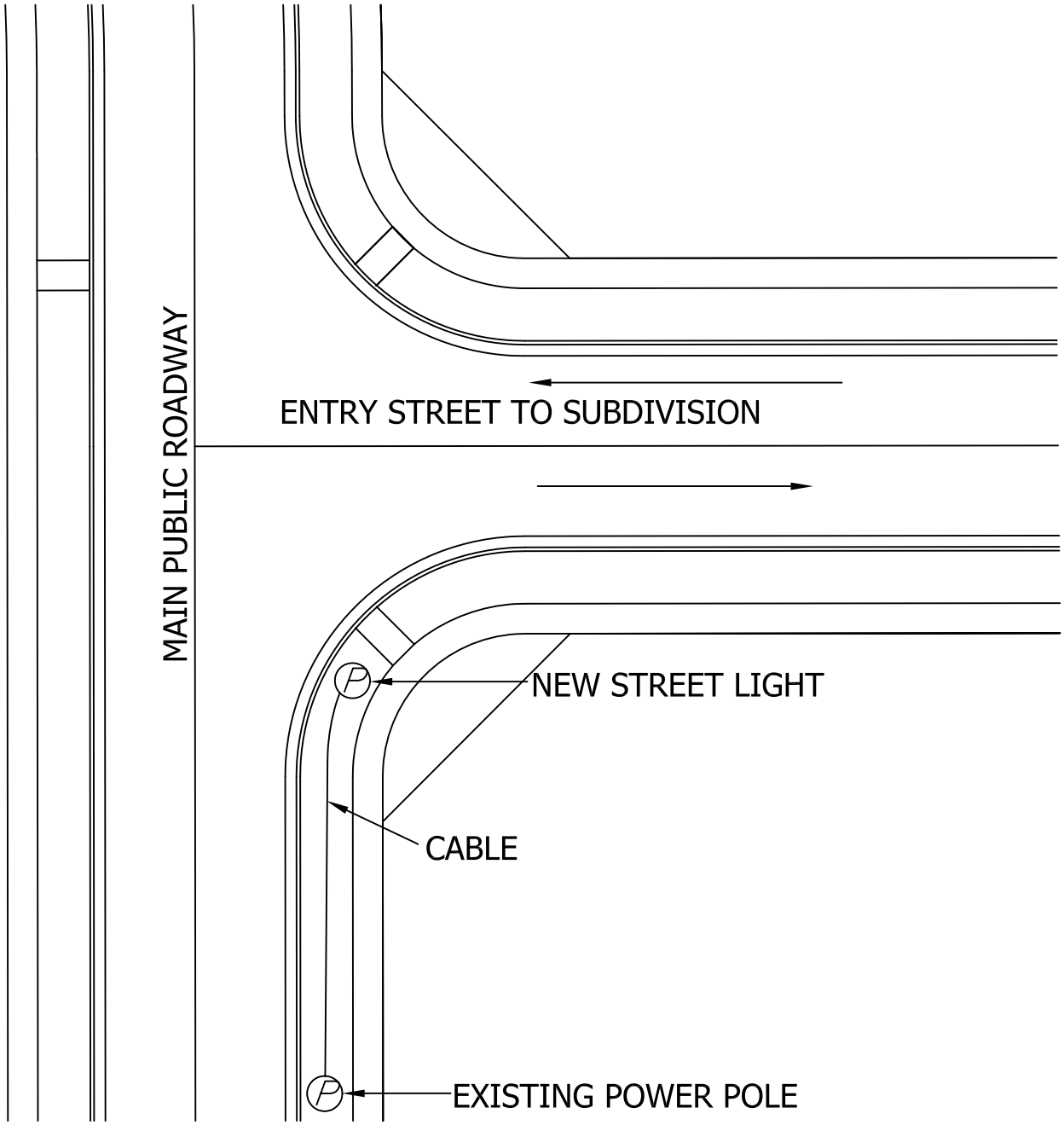

FIELD LOCATION OF STREET LIGHT(S) TO BE APPROVED BY DIVISION OF ENGINEERING PRIOR TO PLACEMENT OF LIGHT POLE FOUNDATION.

DISCONNECT TO BE PLACED WITHIN 5 FEET OF EXISTING POWER SOURCE.

ELECTRICAL PERMIT AND INSPECTION BY CITY OF DUBLIN IS REQUIRED.

Date: 5/1/2014

City of Dublin
ENGINEERING

STANDARD DRAWING

STREET LIGHT LOCATION

SHEET 1 OF 1

DRAWING NO. ***SL-08***

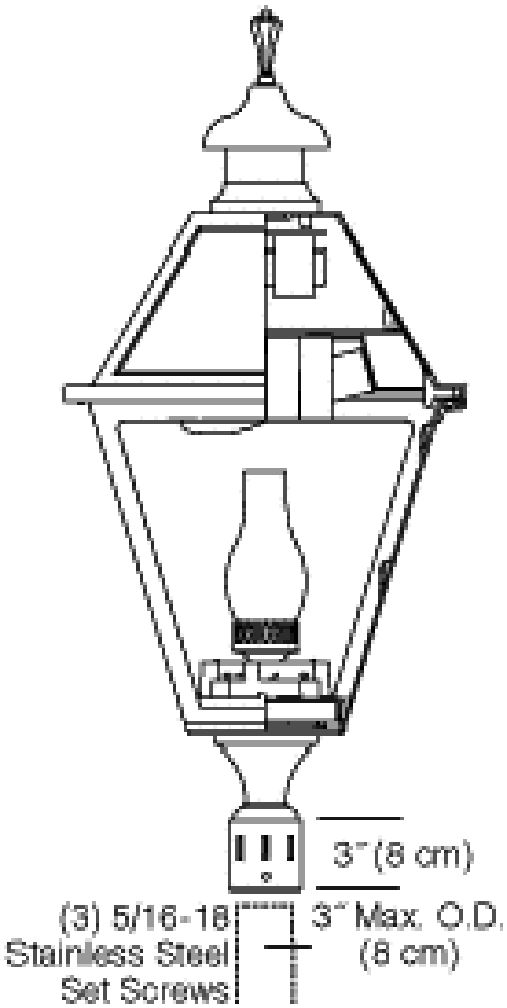

GENERAL DESCRIPTION - 66 WATT LED ARRAY, 4500K COLOR TEMPERATURE, IES, HINGED ROOF WITH SOLID SEALED PANELS.

HOUSING - 356 LOW COPPER- DIE CAST ALUMINUM ALLOY. THE PAINT SHALL BE A POWDER COAT BLACK FINISH APPROVED BY THE CITY ENGINEER. TOOL-LESS LAMP ACCESS AND HINGED ROOF WITH STAINLESS STEEL SPRING LATCH. THE PHOTO CONTROL EYE IS LOCATED IN VENT CAP. SLIP FITTER DIMENSIONS: 3" ID X 3" DEEP.

OPTICAL ASSEMBLY - TYPE III CUTOFF PRECISION FORMED, SEGMENTED SPECULAR ALUMINUM INTERNAL CUTOFF REFLECTOR WITH HORIZONTAL LAMP MOUNTING. DECORATIVE FROSTED GLASS CHIMNEY. INJECTED MOLDED CLEAR ACRYLIC PANELS WITH TOOL-LESS REMOVAL.

LABELING - UL LISTED FOR WET LOCATION AND CSA CERTIFIED.

APPROVED MANUFACTURER - STERNBERG 1843 LEDTF/4ARC45T3/ML/OSFG11W35KLED/CSA/BK
STERNBERG 1843 LEDTF/4ARC45T5/ML/OSFG11W35KLED/CSA/BK

NOTE - THIS LUMINAIRE TO BE USED ONLY IN APPROVED LOCATIONS.

Date: 5/1/2014

City of Dublin
ENGINEERING

STANDARD DRAWING

DECORATIVE LUMINAIRE

SHEET 1 OF 1

DRAWING NO. ***SL-09***

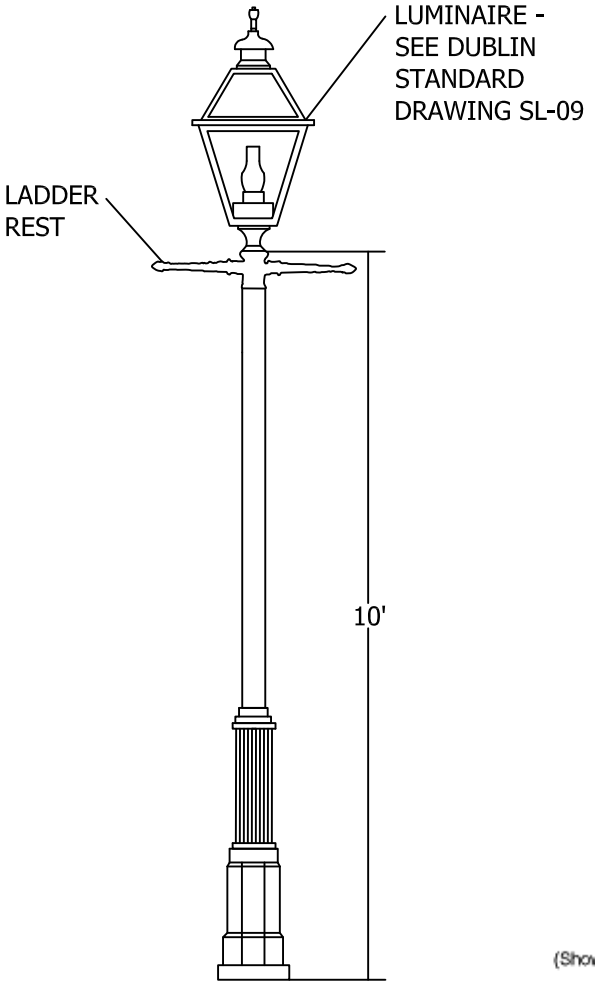

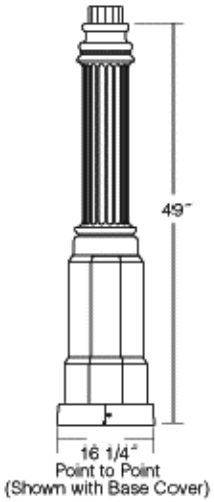

LADDER REST

TYPE A- SINGLE HEAD LUMINAIRE WITH LADDER REST

GENERAL DESCRIPTION- ALUMINUM ROUND TAPERED WITH BASE COVER BLACK FINISH APPROVED BY THE CITY ENGINEER.

BASE- SHALL BE LOW COPPER CAST ALUMINUM 356 HM HIGH STRENGTH ALLOY. BASE WILL INCLUDE AN ACCESS DOOR WITH SAFETY CHAIN AND TEMPER PROOF SCREWS AND GFI RECEPTACLE.

POLE SHAFT-THE SHAFT SHALL BE ONE PIECE SEAMLESS WITH A MINIMUM WALL THICKNESS OF 0.125 INCHES, ROUND 4" TO 3" TAPERED TUBE OF LOW COPPER 6063 ALUMINUM ALLOY. POLE ASSEMBLY SHALL HAVE AN EPA VALUE OF 8.54 FOR WINDSPEED OF 80 MPH.

WRAPPING- EACH POLE SHAFT SHALL BE WRAPPED WITH PROTECTIVE PAPER SECURED IN PLACE. ALL PARTS SHALL BE BOXED AND/OR BANDED.

LADDER REST- SHALL BE LOW COPPER CAST ALUMINUM 356 HM HIGH STRENGTH ALLOY WITH POWDERCOAT BLACK FINISH.

POLE APPROVED MANUFACTURER- HADCO P1761-10A OR APPROVED EQUAL

LADDER REST APPROVED MANUFACTURER- HADCO M0012A OR APPROVED EQUAL

Date: 5/1/2014

City of Dublin
ENGINEERING

STANDARD DRAWING

DECORATIVE LIGHT POLE - SINGLE HEAD

SHEET 1 OF 1

DRAWING NO. ***SL-10***

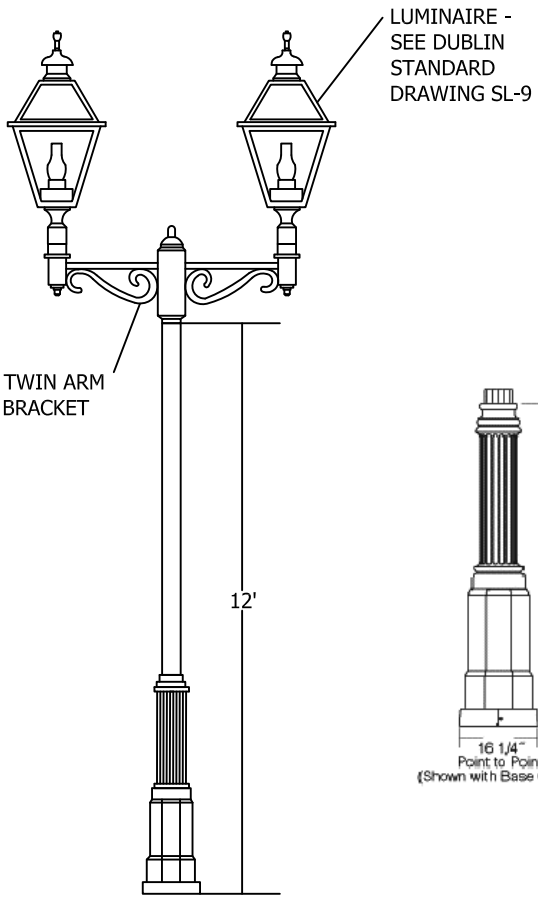

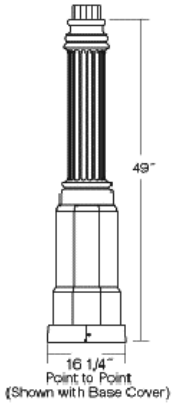

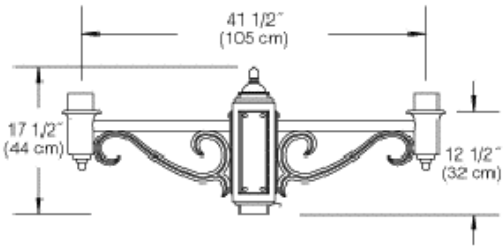

TWIN ARM BRACKET

TYPE B- TWIN HEAD LUMINAIRE

GENERAL DESCRIPTION- ALUMINUM ROUND TAPERED WITH BASE COVER BLACK FINISH APPROVED BY THE CITY ENGINEER.

BASE- SHALL BE LOW COPPER CAST ALUMINUM 356 HM HIGH STRENGTH ALLOY. BASE WILL INCLUDE AN ACCESS DOOR WITH SAFETY CHAIN AND TEMPER PROOF SCREWS AND GFI RECEPTACLE.

POLE SHAFT-THE SHAFT SHALL BE ONE PIECE SEAMLESS WITH A MINIMUM WALL THICKNESS OF 0.125 INCHES, ROUND 4" TO 3" TAPERED TUBE OF LOW COPPER 6063 ALUMINUM ALLOY. POLE ASSEMBLY SHALL HAVE AN EPA VALUE OF 8.54 FOR WINDSPEED OF 80 MPH.

WRAPPING- EACH POLE SHAFT SHALL BE WRAPPED WITH PROTECTIVE PAPER SECURED IN PLACE. ALL PARTS SHALL BE BOXED AND/OR BANDED.

TWIN ARM BRACKET- SHALL BE LOW COPPER CAST ALUMINUM 356 HM HIGH STRENGTH ALLOY WITH CENTER HUB TO ACCOMMODATE 3" POLE TOP.

POLE APPROVED MANUFACTURER- HADCO P1761-12A OR APPROVED EQUAL.

TWIN ARM APPROVED MANUFACTURER- HADCO PTH2120-P3A OR APPROVED EQUAL.

NOTE - TO BE USED ONLY IN APPROVED LOCATIONS.

Date: 5/1/2014

City of Dublin
ENGINEERING

STANDARD DRAWING

DECORATIVE LIGHT POLE - 12' DOUBLE HEAD

SHEET 1 OF 1

DRAWING NO. ***SL-11***

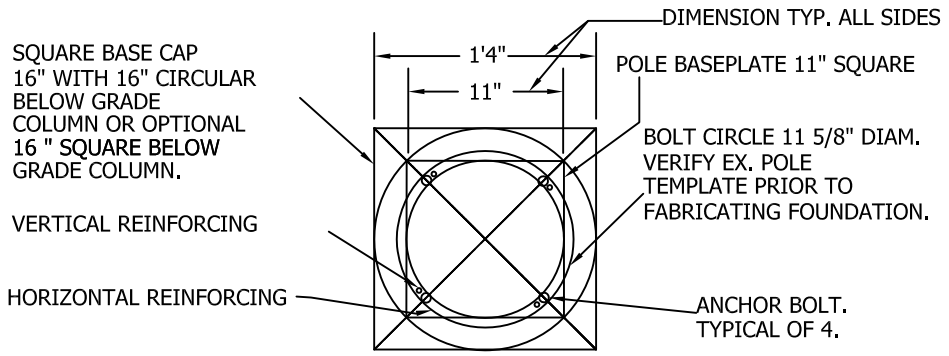

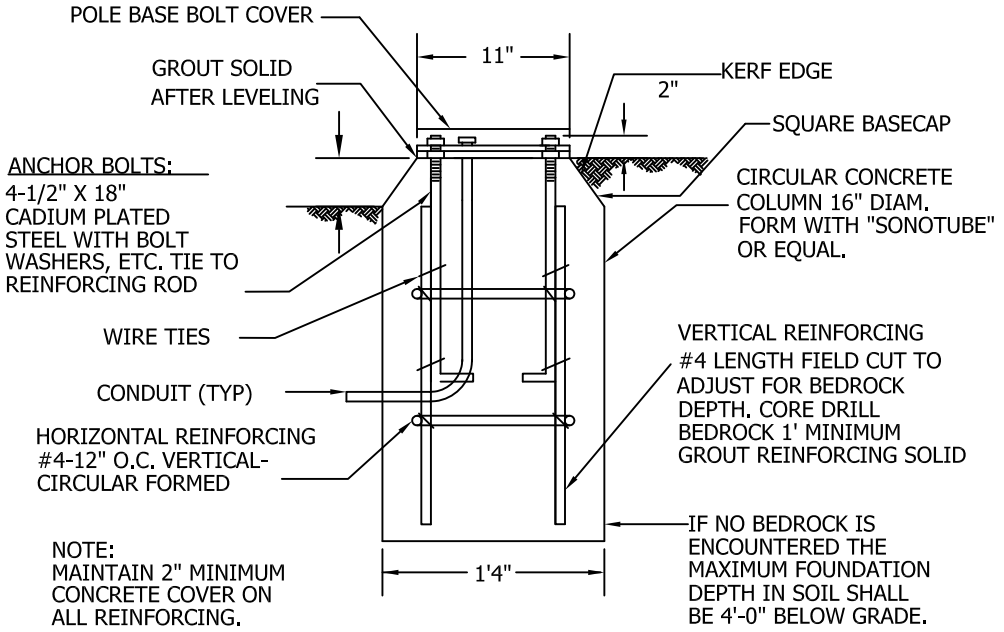

CONCRETE- CLASS C, 4,000 PSI, 5-7% AIR ENTRAINED. FILL ALL EXPOSED SURFACE VOIDS. CHAMFER ALL EDGES, SLOPE TO ¼" WITH GROUT TO DRAIN WATER (FILL VOID BETWEEN BASE PLATE & POLE BASE SOLID, AFTER PLUMBING POLE), ADJUST SO BASE HAS NO GAP TO GROUTED SURFACE. HOT OR COLD WEATHER-FOLLOW ODOT CONSTRUCTION & MATERIAL SPECIFICATIONS SECTION 625.

CONCRETE FINISH- REMOVE ALL FORM MARKS, HAND RUB EXPOSED TOP AND SIDES WITH CARBIDE STONE.

REINFORCINNG- ASTM A-615 GRADE 60 , TYPE S DEFORMED BILLET: #4 VERTICALS, 4 TOTAL, #4 HORIZONTALS 12" O.C., CIRCULAR FORMED. WIRE TIE ALL CONNECTIONS, MAINTAIN 2" MINIMUM CONCRETE COVER.

WEATHERPROOFING- PROVIDE PENETRATING SURFACE APPLIED, 1 COAT CONCRETE WATERPROOFING AGENT. MATERIAL SHALL BE CLEAR PENETRATING, WATER BASED, ALKYLALKOXYSILANE AND AND CONTAIN A MINIMUM OF 40% BY WEIGHT SOLIDS AND BE APPLIED PER MANUFACTURER'S DIRECTIONS. APPLY 1 COAT TO ALL CONCRETE SURFACES ABOVE GRADE TO 12" BELOW GRADE PRIOR TO BACKFILLING.

GROUNDING- PROVIDE ⅝" X 10' COPPER WELD ONE-PIECE GROUND ROD. DRIVE A MINIMUM OF 2' BELOW GRADE. RUN #4 AWG SOLID COPPER GROUNDING ELECTRODE CONDUTOR IN ¾" PVC CONDUIT FROM ROD TO ENCLOSURE GROUND BAR. "CAD" WELD WIRE CONNECTION AT ROD.

Date: 5/1/2014

City of Dublin
ENGINEERING

STANDARD DRAWING

DECORATIVE LIGHT POLE FOUNDATION

SHEET 1 OF 1

DRAWING NO. ***SL-12***

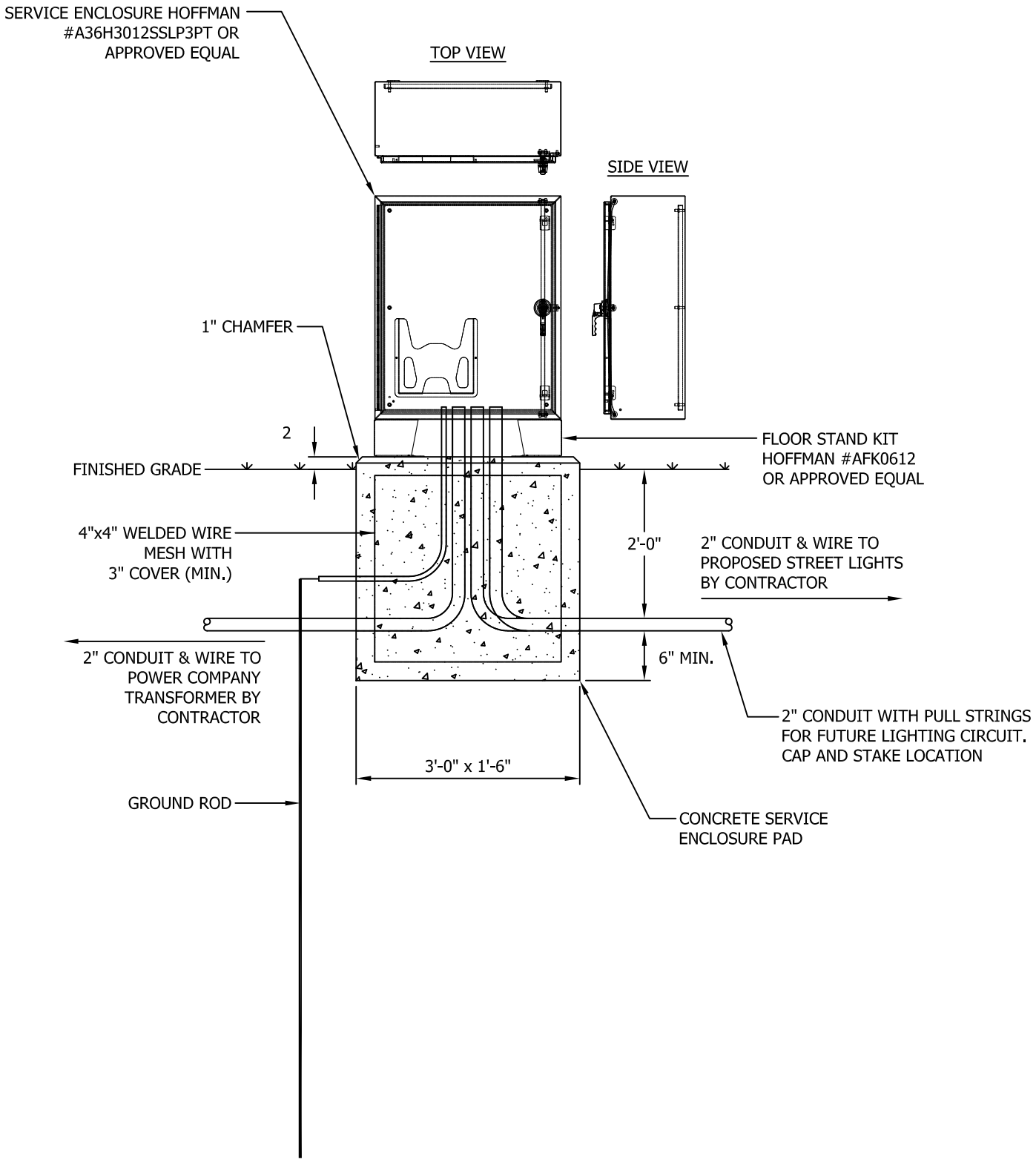

Date: 5/1/2014

City of Dublin
ENGINEERING

STANDARD DRAWING

LIGHTING CONTROLLER

SHEET 1 OF 4

DRAWING NO. ***SL-13***

COORDINATION - COORDINATE LOCATION OF TRANSFORMER AND PAD GRADING WITH AEP AND THE CITY ENGINEER.

SERVICE TRANSFORMER - PROVIDED, INSTALLED AND WIRED BY AEP.

TRANSFORMER PAD GRADING - INSTALL PER AEP REQUIREMENTS FOR SIZE AND LOCATION. REFER TO SERVICE ENCLOSURE PAD FOR MATERIAL SPECIFICATIONS.

SERVICE ENCLOSURE PAD - STRUCTURE SHALL BE SET CLOSE TO THE AEP POWER COMPANY TRANSFORMER PAD. LOCATION OF THE TRANSFORMER PAD IN RELATIONSHIP TO THE ENCLOSURE PAD SHALL BE COORDINATED WITH THE CITY ENGINEER. CONCRETE SHALL BE CLASS C. FILL ALL EXPOSED SURFACE VOIDS. CHAMFER ALL EDGES 3/4-INCH OR 1-INCH. SLOPE TOP 1/4" TO DRAIN WATER. FINISH - REMOVE ALL FORM MARKS, PROVIDE FLOATED AND STEEL TROWELED FINISH.

SERVICE ENCLOSURE - PROVIDE A NEMA WATERTIGHT STAINLESS STEEL ENCLOSURE. SIZE - 36"H X 30"W X 12"D; HAVING A SINGLE CONTINUOUS HINGED LOCKING DOOR, INTERIOR MOUNTING PANEL WITH A 6" MINIMUM STAINLESS STEEL MATCHING FLOOR STAND. CONCRETE AND OR BOLT TYPE ANCHOR AND LEVEL TO PAD VIA STAINLESS STEEL MACHINE BOLT, NUTS & LOCK WASHERS. DRILL BOTTOM OF ENCLOSURE WITH 6MM (1/4") WEEP HOLE AT LOW POINT. CONCRETE PAD SHALL NOT EXTEND ABOVE PROPOSED GRADE MORE THAN 2-INCHES.

SERVICE ENCLOSURE FINISH - A DARK BRONZE APPROVED BY THE CITY ENGINEER. THE PAINT SHALL BE A POWDER PAINT FINISHED TO A GLOSS OF 35% (AT 60 DEGREES).

SERVICE ENCLOSURE LOCK - THREE POINT MECHANISM WITH LOCKABLE HANDLE. PADLOCK PROVIDED BY THE CITY.

PHOTOCELL CONTROLLER - PROVIDE AN ON-OFF PHOTO INITIATED CONTROLLER WITH SEALED CADMIUM SULFIDE PHOTOCELL TO OPERATE IN -30 DEGREES F TO +140 DEGREES F TEMPERATURES, THERMAL INERTIA OF 15 SECONDS MINIMUM, THREADED PIPE NIPPLE, RATED 16 AMPS 2000 WATTS AT 120V, AND SINGLE POLE SINGLE THROW SWITCH. LIGHT SHALL BE 2 FOOT CANDLES FOR TURN ON AND 10 FOOT CANDLES FOR TURN OFF. PROVIDE IN WEATHERPROOF ENCLOSURE. LOAD SHALL REMAIN "ON" IN CASE OF CELL FAILURE. MOUNT ATOP FIRST POLE FROM SERVICE ENCLOSURE.

APPROVED MANUFACTURER - PARAGON #PJ201-00

GROUNDING - PROVIDE 5/8" X 10' COPPER WELD ONE PIECE GROUND ROD. DRIVE A MINIMUM OF 2'-0" BELOW GRADE. PROVIDE #8 AWG SOLID COPPER GROUNDING ELECTRODE CONDUCTOR IN 3/4" PVC CONDUIT FROM ROD TO ENCLOSURE GROUND BAR. CADWELD WIRE CONNECTION TO ROD.

FUSING - SERVICE ENTRANCE - PROVIDE DUAL ELEMENT, TIME DELAY FUSES, UL CLASS RK-1, 600 V, REJECTION TYPE.

APPROVED MANUFACTURER - BUSS #LP-RK

Date: 5/1/2014

City of Dublin
ENGINEERING

STANDARD DRAWING

LIGHTING CONTROLLER

DRAWING NO. ***SL-13***

CONTROL CIRCUIT - PROVIDE SINGLE ELEMENT, FAST ACTING TYPE FUSE, UL CLASS CC, 120 V, REJECTION TYPE.

APPROVED MANUFACTURER - BUSS #KTK-R

CONDUIT - SHALL BE HEAVY WALL 2" OR 3/4" PER GRAPHIC. RIGID NON METALLIC SCHEDULE 40 PVC FOR USE ABOVE AND BELOW GROUND OR CONCRETE ENCASE. RATED FOR 90 DEGREES CELSIUS CONDUCTORS AND USE IN DIRECT SUNLIGHT. MATERIAL SHALL BE UL LISTED AND COMPLY WITH NEMA TC2-1978 AND F.S. #WC-1094A. PROVIDE IN 10' SECTIONS. SEAL ALL JOINTS WATERTIGHT. GLUE JOINTS WITH PVC CEMENT AND BUSH ALL ENDS. ALL BENDS SHALL USE LONG RADIUS PRE FORMED ELBOWS. EXTEND CONDUIT TO MINIMUM 2'-0" BELOW GRADE. LOCATION TO BE COORDINATED WITH LANDSCAPING AND UTILITIES.

IF UNIT TYPE DUCT CABLE IS UTILIZED IN TRENCHES IN LIEU OF PVC CONDUIT, AT POLE FOUNDATIONS RETAIN THE PVC CONDUIT SPECIFIED ABOVE IT SHALL FUNCTION AS A SLEEVE FOR THE DUCT CABLE. OVERSIZE PVC CONDUIT EITHER 2 1/2" OR 3" AS REQUIRED BASED ON DUCT CABLE OUTSIDE DIAMETER.

WIRING - REFER TO GENERAL SPECIFICATIONS.

LIGHTING CONTROLLER - A CLASS R FUSIBLE COMBINATION LIGHTING CONTACTOR TYPE CONTROLLER ASSEMBLY RATED 600V, 60A-2P, 60HZ WITH SOLID NEUTRAL, ELECTRICALLY HELD WITH CONTROL FUSE, 120V CONTROL VOLTAGE 3 POSITION HAND - OFF - AUTO SELECTOR SWITCH AND PHOTOCELL CONTROL. MOUNT ALL DEVICES IN A SERVICE ENCLOSURE LESS PHOTO CONTROL.

APPROVED MANUFACTURER - SQUARE "D" NIGHT-MASTER SPC-61 (OR APPROVED EQUAL).

480V SYSTEM
CLASS 8903 NIGHTMASTER LIGHTING CONTACTOR 8903SPC61V81CFF4G102TY1
CONTACTOR RATING - 60 AMPS
FUSED COMBINATION STARTER WITH CLASS R FUSE CLIPS (FUSES NOT INCLUDED)
3 POLE DEVICE
TYPE 3R ENCLOSURE SUITABLE ONLY FOR USE AS SERVICE EQUIPMENT.
SPECIFIED FOR 480 VOLTS, 60 HZ POWER SYSTEM
FUSED CONTROL TRANSFORMER SELECTED WITH 120V, 60 HZ COIL
- T - STANDARD CAPACITY
- 480 VOLT PRIMARY
- 120 VOLT SECONDARY

FUSING
- F4 - 2 PRIMARY CONTROL FUSES
- F - 1 SECONDARY CONTROL FUSE

CONTROL UNITS SUPPLIED
- C - HAND-OFF-AUTO SELECTOR SWITCH
- G102 - WIRED FOR REMOTE PHOTOCELL
- N - ADDITION OF SOLID NEUTRAL
- Y1 - UL PANEL LABEL

277V SYSTEM
CLASS 8903 NIGHTMASTER LIGHTING CONTACTOR 8903SPC61V85CFF4G102TY1
CONTACTOR RATING - 60 AMPS
FUSED COMBINATION STARTER WITH CLASS R FUSE CLIPS (FUSES NOT INCLUDED)
3 POLE DEVICE
TYPE 3R ENCLOSURE SUITABLE ONLY FOR USE AS SERVICE EQUIPMENT.
SPECIFIED FOR 277 VOLTS, 60 HZ POWER SYSTEM
FUSED CONTROL TRANSFORMER SELECTED WITH 120V, 60 HZ COIL
- T - STANDARD CAPACITY
- 277 VOLT PRIMARY
- 120 VOLT SECONDARY

FUSING
- F4 - 2 PRIMARY CONTROL FUSES
- F - 1 SECONDARY CONTROL FUSE

CONTROL UNITS SUPPLIED
- C - HAND-OFF-AUTO SELECTOR SWITCH
- G102 - WIRED FOR REMOTE PHOTOCELL
- N - ADDITION OF SOLID NEUTRAL
- Y1 - UL PANEL LABEL

240V SYSTEM
CLASS 8903 NIGHTMASTER LIGHTING CONTACTOR 8903SPC62V80CFF4G102TY1
CONTACTOR RATING - 60 AMPS
FUSED COMBINATION STARTER WITH CLASS R FUSE CLIPS (FUSES NOT INCLUDED)
3 POLE DEVICE
TYPE 3R ENCLOSURE SUITABLE ONLY FOR USE AS SERVICE EQUIPMENT.
SPECIFIED FOR 240 VOLTS, 60 HZ POWER SYSTEM
FUSED CONTROL TRANSFORMER SELECTED WITH 120V, 60 HZ COIL
- T - STANDARD CAPACITY
- 240 VOLT PRIMARY
- 120 VOLT SECONDARY

FUSING
- F4 - 2 PRIMARY CONTROL FUSES
- F - 1 SECONDARY CONTROL FUSE

CONTROL UNITS SUPPLIED
- C - HAND-OFF-AUTO SELECTOR SWITCH
- G102 - WIRED FOR REMOTE PHOTOCELL
- N - ADDITION OF SOLID NEUTRAL
- Y1 - UL PANEL LABEL

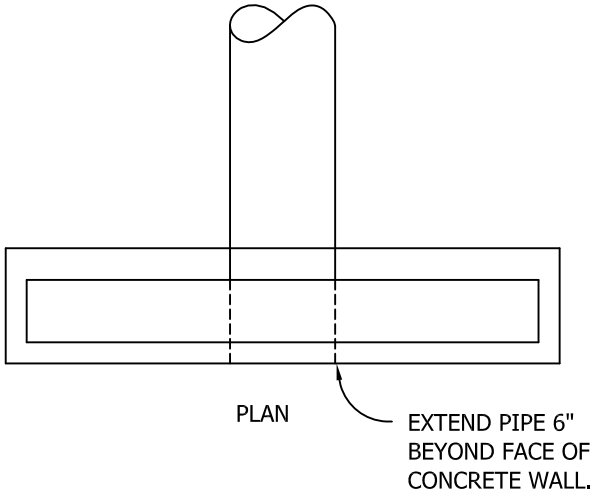

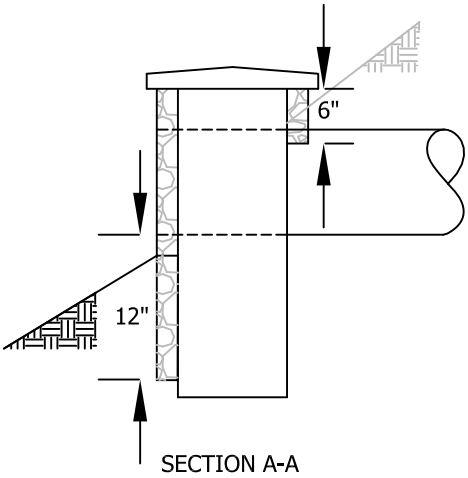

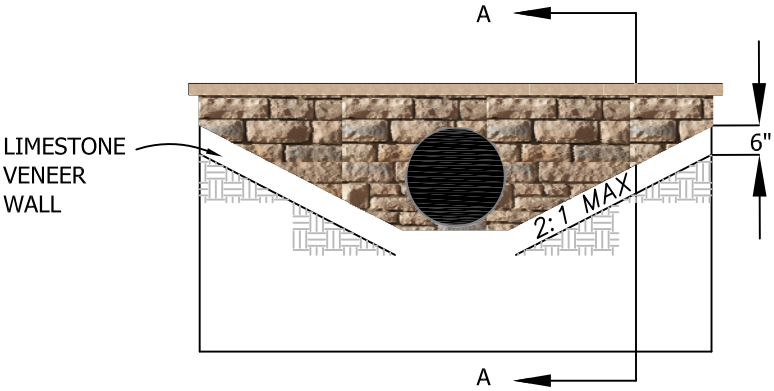

ELEVATION

STONE VENEER

NO SCALE

16 " WALL CAP

NOTES:

1.STONE VENEER:
MANUFACTURED SYNTHETIC STONE VENEER SHALL BE GREAT LAKE LIMESTONE AS MANUFACTURED BY DUTCH QUALITY STONE, INC. (1-330-359-7866) OR AN APPROVED ALTERNATIVE. MORTAR COLOR SHALL APPROXIMATE THE STONE COLOR. MORTAR AND GROUTING TYPE S PER MANUFACTURES INSTRUCTIONS. STONE SHALL BE PLACED IN A RANDOM PATTERN SIMILAR TO AVERY/MUIRFIELD BRIDGE OVER US 33/SR 161.

2.ALL EXPOSED CONCRETE STRUCTURES SHALL COMPLY WITH THE STONE VENEER AS SHOWN ON THIS DETAIL.

THE TOP OF ALL HEADWALLS THAT ARE TO BE STONE FACED SHALL HAVE A STONE WALL CAP.

THE WALL CAP SHALL BE 16" IN WIDTH AND TAN IN COLOR AS MANUFACTURED BY DUTCH QUALITY STONE OR APPROVED EQUAL.

MORTAR AND GROUTING TYPE SHALL BE PER THE MAUFACTURER'S SPECIFICATIONS.

Date: 05/01/2014

City of Dublin
ENGINEERING

STANDARD DRAWING

STONE VENEER AND WALL CAP FOR HEADWALLS

SHEET 1 OF 1

DRAWING NO. ***ST-01***

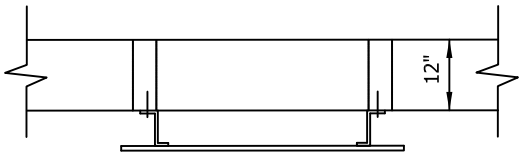

TOP VIEW

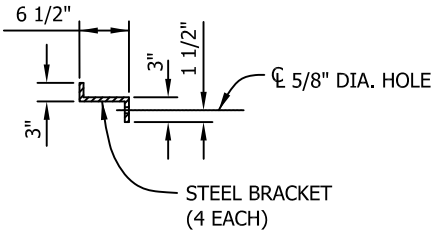

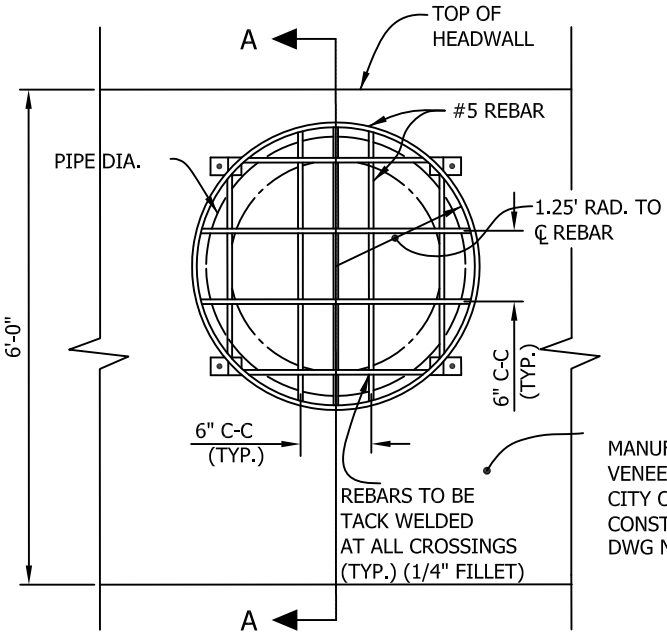

END SECTION

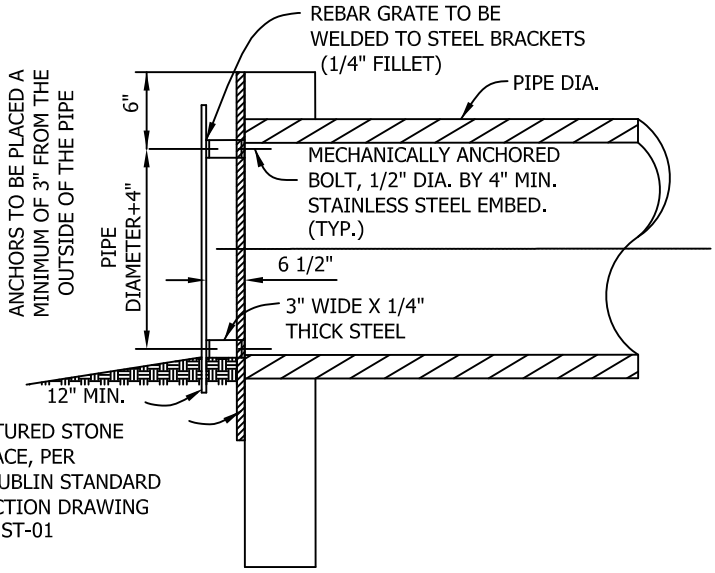

SECTION A-A

NOTES :

1. GRATES AND BRACKETS SHALL BE GALVANIZED IN ACCORDANCE WITH CITY OF COLUMBUS CONSTRUCTION AND MATERIAL SPECIFICATIONS 711.02.

2. TO BE USED ON 21" AND LARGER DIAMETER PIPES

3. ONLY TO BE PLACED ON STORMWATER FACILITY OUTLETS

Date: 05/01/2014

City of Dublin
ENGINEERING

STANDARD DRAWING

SAFETY GRATE

SHEET 1 OF 1

DRAWING NO. ***ST-02***

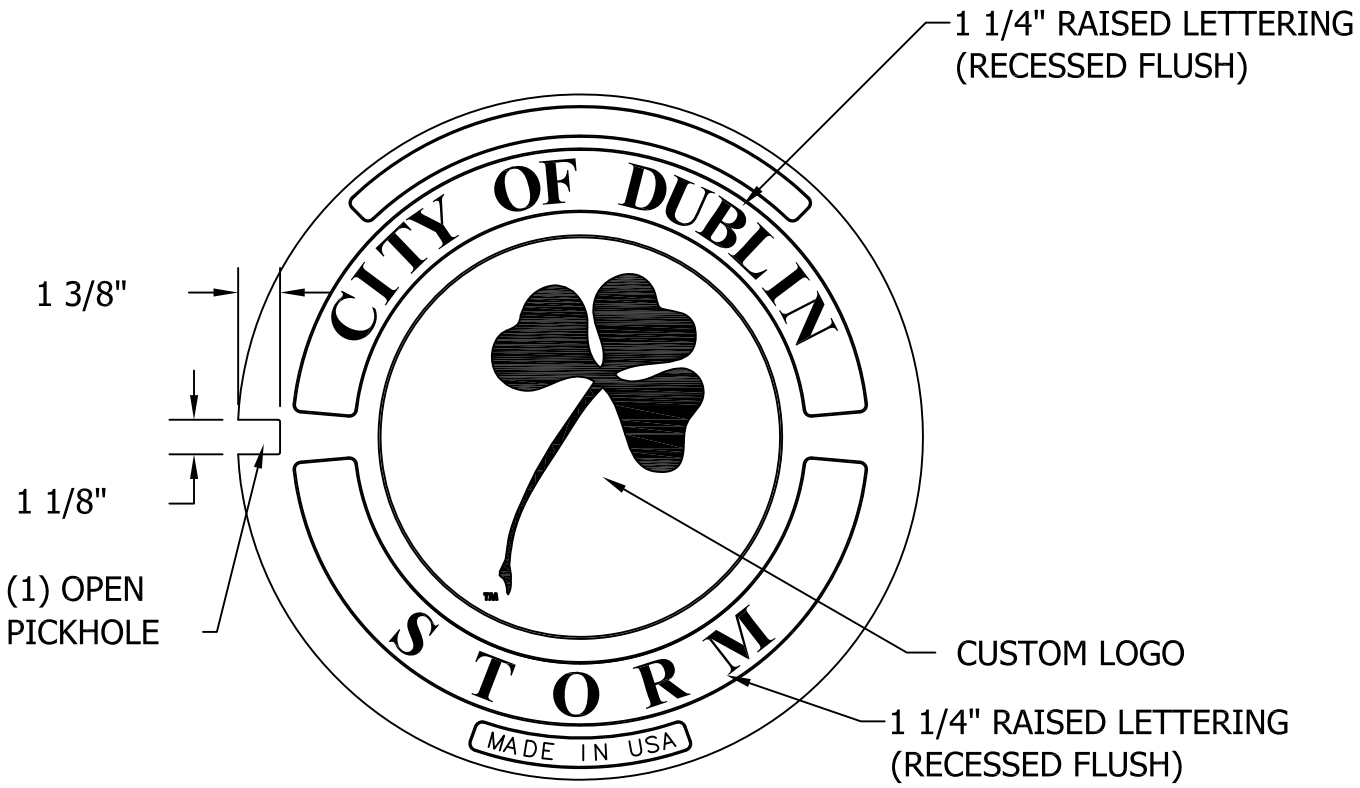

COVER FACE

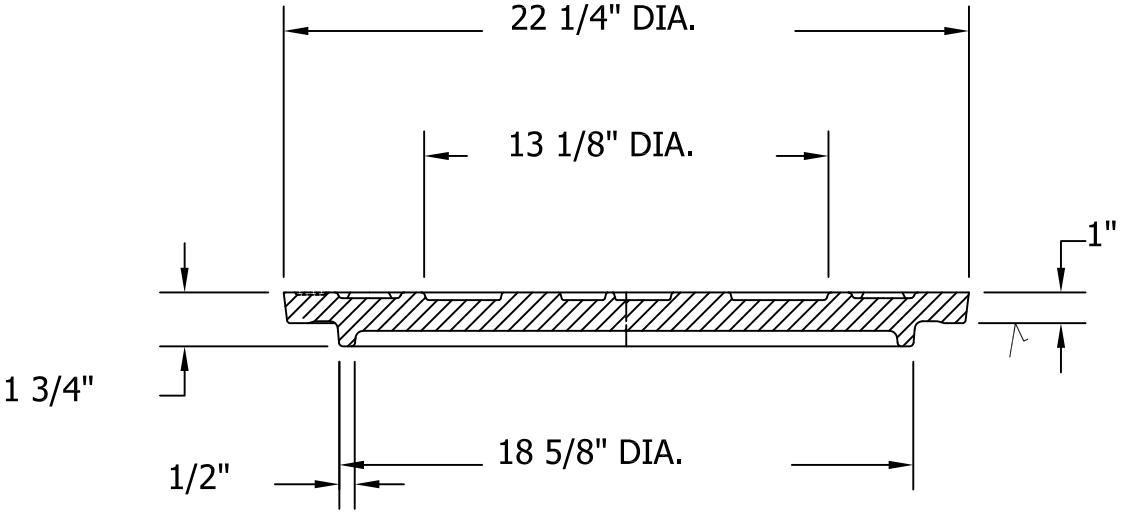

COVER SECTION

Date: 05/01/2014

City of Dublin
ENGINEERING

STANDARD DRAWING

STORM SEWER MANHOLE LID

SHEET 1 OF 1

DRAWING NO. ***ST-03***

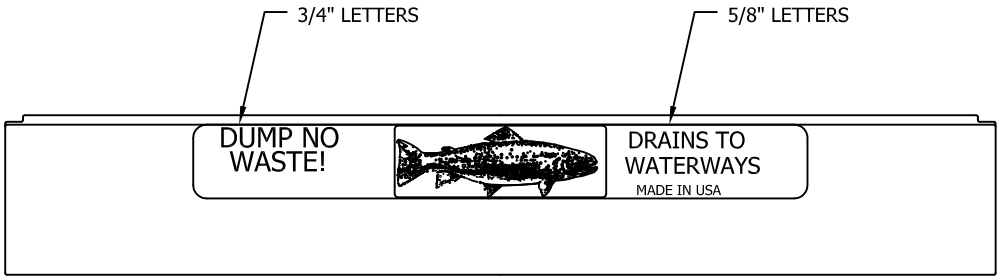

TOP VIEW

CURB ADJUSTMENT
6" TO 10"

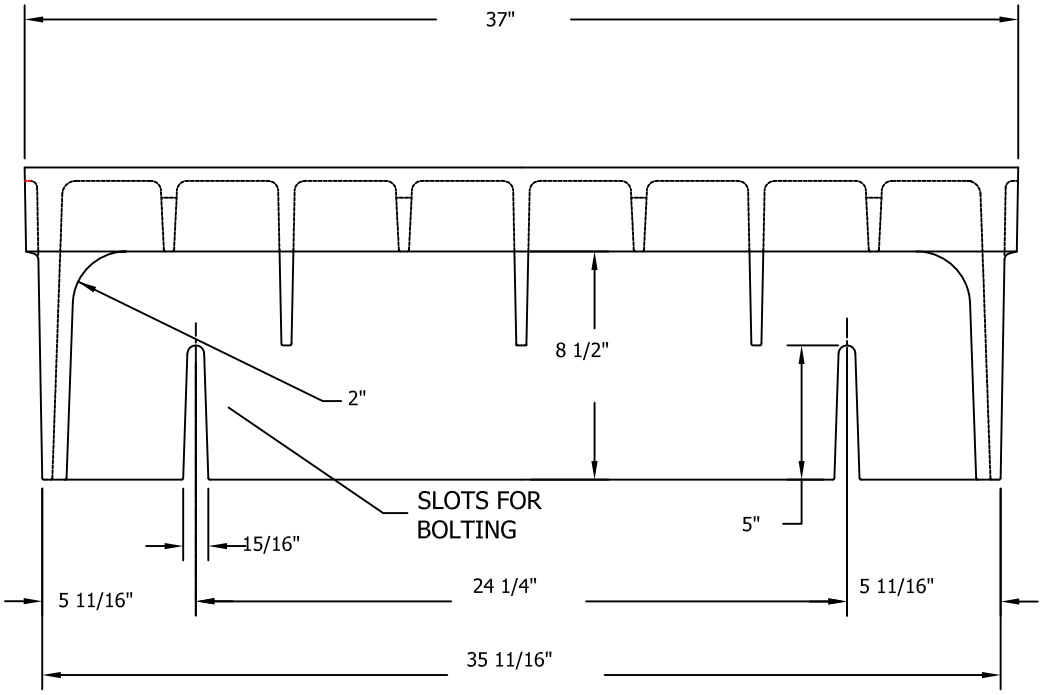

FRONT VIEW

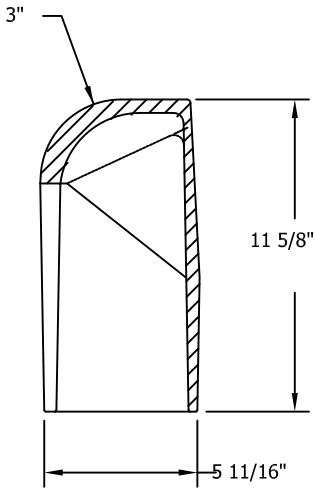

SECTION

Date: 05/01/2014

City of Dublin
ENGINEERING

STANDARD DRAWING

DRAINS TO RIVER CURB INLET

SHEET 1 OF 1

DRAWING NO. ***ST-04***

PLAN VIEW

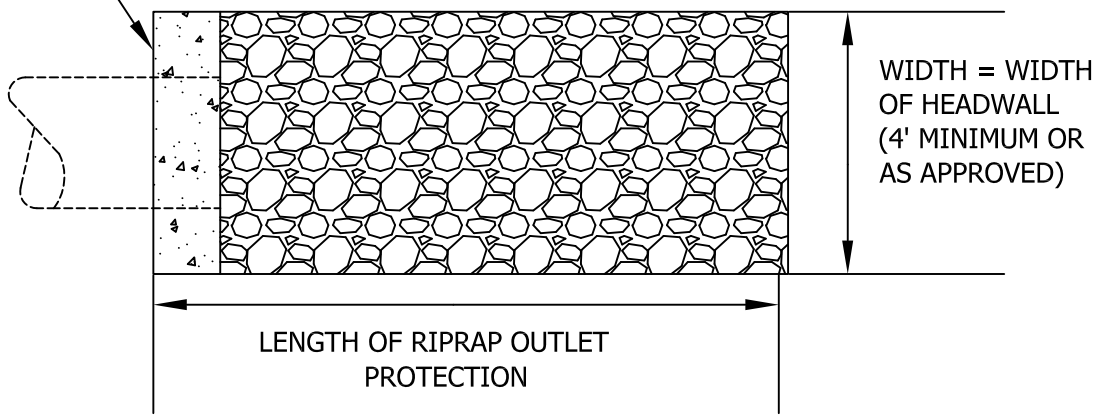

PROFILE

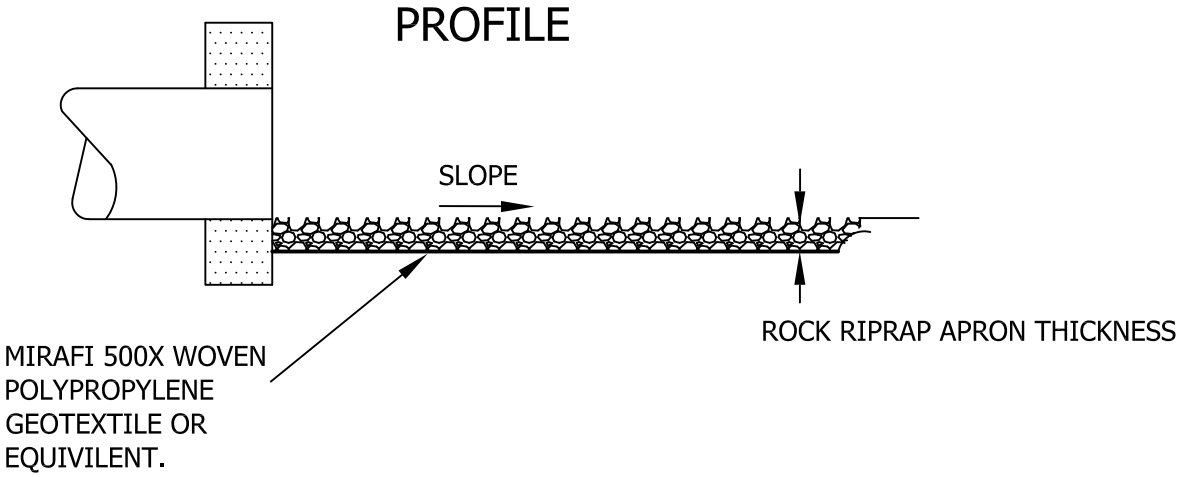

NOTES:
1. MINIMUM LENGTH TO BE 8 FEET, 5 FEET IF PIPE IS SUBMERGED.
2. MINIMUM THICKNESS OF 18 INCHES.
3. RIP-RAP SIZE TO BE DETERMINED BY OUTLET FLOW VELOCITY

Date: 05/01/2014

City of Dublin
ENGINEERING

STANDARD DRAWING

ROACK CHANNEL PROTECTION DETAIL

SHEET 1 OF 1

DRAWING NO. ***ST-05***

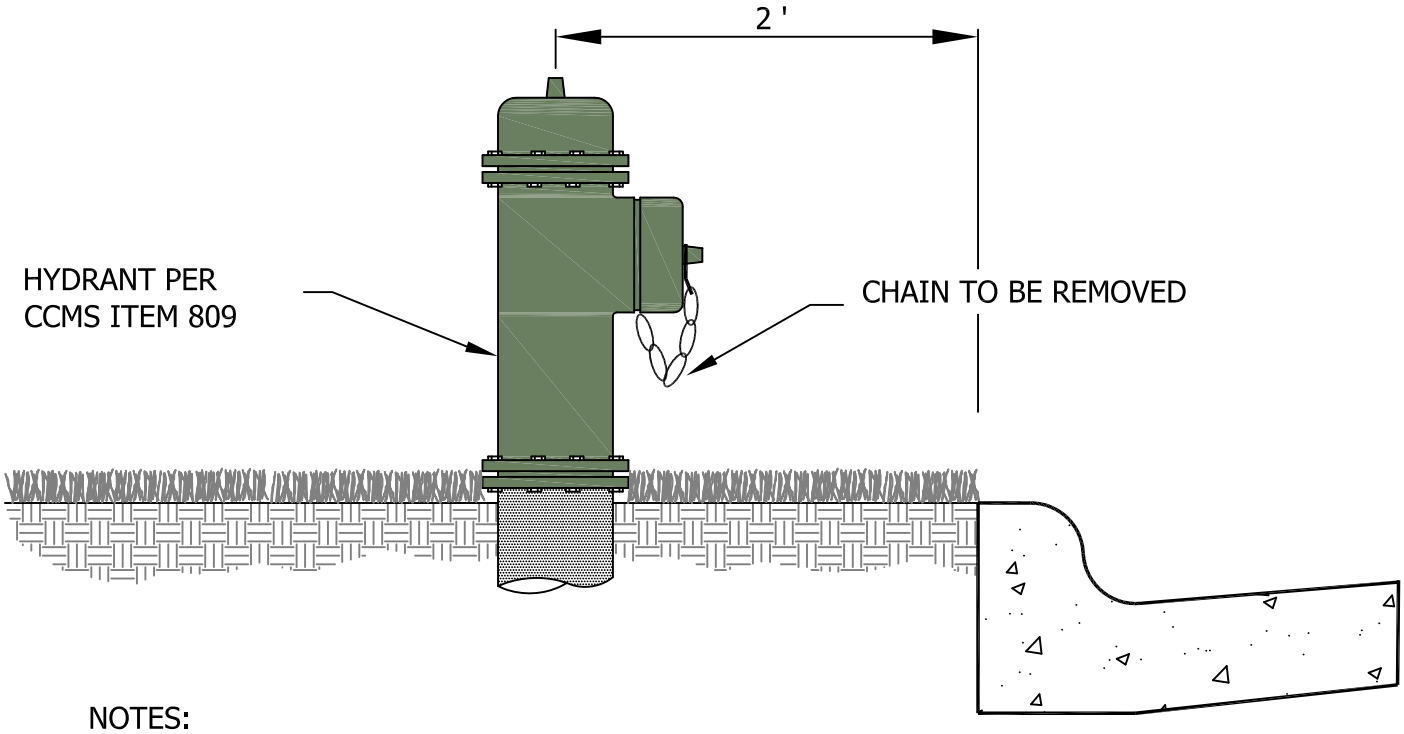

NOTES:

PAINT AND PRIMER TO BE SHOP APPLIED.

PAINT: SHERWIN WILLIAMS - POLANE SP POLYURETHANE ENAMEL, OR APPROVED EQUAL

PAINT COLOR: VISTA GREEN NO. 80-105 (RGB#: 106,127,96), OR APPROVED EQUAL

PRIMER: AS SPECIFIED BY THE MANUFACTURER

PRIVATE HYDRANTS SHALL BE WHITE NO. D876967-31-1 OR 80-1 WITH VISTA GREEN TOP AND CAP

ALL HYDRANTS WILL COME EQUIPPED WITH A STORZ NOZZLE.

MANUFACTURER	PRODUCT NO.	COMMENTS
AMERICAN FLOW CONTROL	MARK 73 SERIES	"NO DRAIN" ONLY
CLOW CORPORATION	EDDY "F2641"	
MUELLER CO.	SUPER CENTURION 200	
KENNEDY	K-81A	
AMERICAN AVK	NO. 2760	

Date: 05/01/2014

City of Dublin
ENGINEERING

STANDARD DRAWING

FIRE HYDRANT

SHEET 1 OF 1

DRAWING NO. ***WA-01***

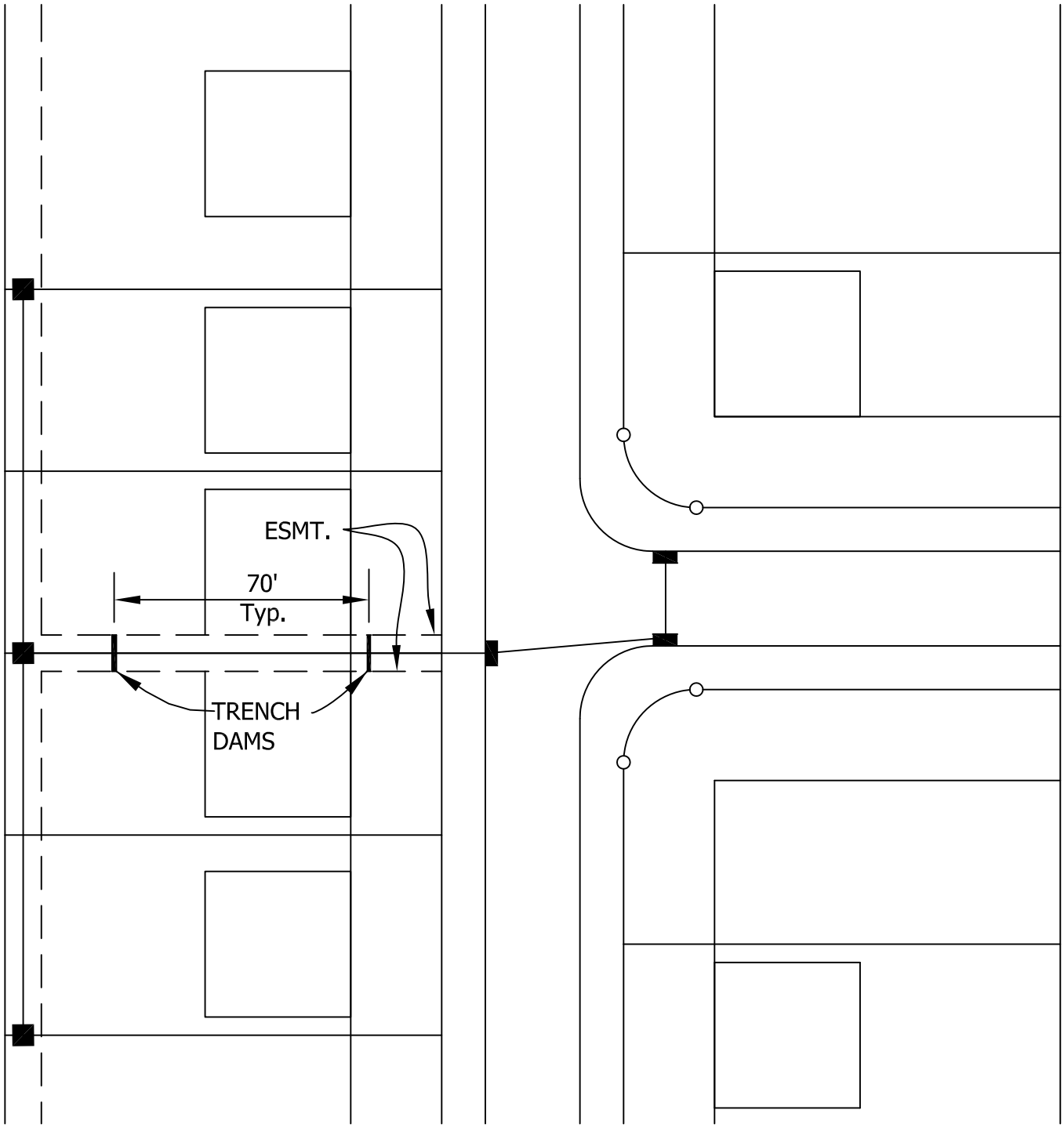

NOT TO SCALE

NOTE:
FOR ALL STORM SEWER PIPE ALONG THE SIDE YARD OF A LOT, CONTRACTOR SHALL USE REINFORCED CONCRETE PIPE (ASTM C-76) WITH "O" RING RUBBER GASKET JOINTS (ASTM C-136) WITH NO AGGREGATE BACKFILL.

Date: 05/01/2014

City of Dublin
ENGINEERING

STANDARD DRAWING

STORM SEWER WITH "O" RING RUBBER GASKET JOINTS

SHEET 1 OF 1

DRAWING NO. ***ST-06***

H. SCOPE OF WORK

SR 161 / Riverside Drive Roundabout (Part 1) and the Riverside Drive Realignment and Other Public Improvements (Part 2): The project is the reconstruction of the signalized SR 161 / Riverside Drive intersection as a roundabout and 3200 feet of Riverside Drive on new alignment. The reconstruction includes approximately 36,000 feet of granite curb including granite edged planting beds, 82,500 square feet of brick sidewalk, parking areas with permeable pavers, over 400 trees and 94,000 plantings, new street lighting, AEP and Dublink.

A mandatory pre-bid meeting is scheduled for Monday, March 9, 2015 10:30 AM at 5800 Shier-Rings Road, Dublin, OH 43016.

The deadline for questions is Friday March 13, 2015 5:00 P.M. local time.

IV. OWNER COMPLETED FORMS

A. OWNER EXECUTION CHECKLIST

The following list highlights and serves as a reminder of actions required to execute the Contract with the selected bidder.

Notice of Award

- ☐ Complete the form once bidder selected
- ☐ Mail form to bidder
- ☐ Collect acceptance from bidder

Notice of Award to Surety and Surety's Agent

- ☐ Complete the form once bidder selected
- ☐ Send the bond to legal counsel for double-check of validity
- ☐ Send notice form to Surety and Agent at the addresses listed on the Bond form

Bid Tabulation Sheet

- ☐ If Prevailing Wage applies, ensure that the Bid Tabulation Sheet is completed and in your Project file

Prevailing Wage

- ☐ Check the date of the Determination Letter included with the Contract Documents. If it has expired, issue new prevailing wage rates to the Contractor.

Owner/Contractor Agreement

- ☐ Have the Contractor sign the Agreement
- ☐ Have the Law Director review and sign the Agreement
- ☐ Have the Fiscal officer sign the Agreement
- ☐ Have the CITY OF DUBLIN representative sign the Agreement

Notice of Commencement

- ☐ Complete the Notice of Commencement form and put it in the Project file
- ☐ Must produce it if requested but no filing requirement

Notice to Proceed

- ☐ Issue the Notice to Proceed

Bidder's and Subcontractors' Certificate(s) of Licensure

- ☐ If applicable, Collect from Bidder if not submitted with Bid

B. NOTICE OF AWARD TO BIDDER

Date: _____

PROJECT: SR 161 / RIVERSIDE DRIVE ROUNDABOUT (PART1) AND RIVERSIDE DRIVE REALIGNMENT AND OTHER PUBLIC IMPROVEMENTS (PART 2) PROJECT

The CITY OF DUBLIN (Owner) has considered the Bid submitted by you for the above-described work in response to the Legal Notice dated March 2, 2015.

You are hereby notified that your Bid has been accepted for items in the amount of $.

You are required by the Instructions to Bidders to execute the Contract and furnish the required documents within ten (10) calendar days from the date of this notice to you.

If you fail to execute said Contract within ten (10) days from the date of this notice, Owner may—at its discretion—exercise its rights with respect to your Bid guaranty and be entitled to such other rights as may be granted by Law.

You are required to return an acknowledged copy of this Notice of Award to the Owner.

Dated this _____ day of _____, 2015.

Sincerely,

_____
Paul A. Hammersmith P.E.
Director of Engineering / City Engineer

ACCEPTANCE OF NOTICE

Receipt of the above Notice of Award is hereby acknowledged.

Bidder_____

This _____ day of _____, 2015

By: _____

Title: _____

C. NOTICE OF AWARD TO SURETY AND SURETY'S AGENT

_____ (Surety)

_____ (Address)

_____ (City/State/Zip)

_____ (Surety's Agent)

_____ (Address)

_____ (City/State/Zip)

Date: _____

SENT BY REGULAR U.S. MAIL

RE: NOTICE OF AWARD OF CONTRACT

To Whom It May Concern:

You are notified that your principal, , has been awarded a contract for the CITY OF DUBLIN, SR 161 / RIVERSIDE DRIVE ROUNDABOUT (PART1) AND RIVERSIDE DRIVE REALIGNMENT AND OTHER PUBLIC IMPROVEMENTS (PART 2) project, in the amount of $_____ by the CITY OF DUBLIN, OHIO .

Sincerely,

_____

Paul A. Hammersmith P.E.
Director of Engineering / City Engineer

D. NOTICE TO PROCEED

To:

Date: _____

Project: **SR 161 / RIVERSIDE DRIVE ROUNDABOUT (PART1) AND RIVERSIDE DRIVE REALIGNMENT AND OTHER PUBLIC IMPROVEMENTS (PART 2) PROJECT**

Owner: CITY OF DUBLIN, OHIO
5200 Emerald Parkway, Dublin, Ohio 43017

You are hereby notified to commence Work in accordance with the City/Contractor Agreement dated , and you are to complete the Work in the time required by the Contract Documents. Within ten (10) days from this Notice to Proceed date, you will begin physical, on-site improvements. You are required to return an acknowledged copy of this Notice to Proceed, to the Owner, indicating Acceptance of this Notice to Proceed.

_____
Paul A. Hammersmith P.E.
Director of Engineering / City Engineer

ACCEPTANCE OF NOTICE TO PROCEED

Receipt of the above NOTICE TO PROCEED is hereby acknowledged by _____, this the day of _____, 2015.

By: _____

Title: _____

E. NOTICE OF COMMENCEMENT OF PUBLIC IMPROVEMENT (O.R.C. §1311.252)

NOTICE IS HEREBY GIVEN OF THE COMMENCEMENT OF A PUBLIC IMPROVEMENT AS FOLLOWS:

1. The public improvement is identified as the CITY OF DUBLIN, SR 161 / RIVERSIDE DRIVE ROUNDABOUT (PART1) AND RIVERSIDE DRIVE REALIGNMENT AND OTHER PUBLIC IMPROVEMENTS (PART 2) project located at SR 161 at Riverside Drive and Riverside Drive between I-270 and approximately Martin Road.

2. The public authority and Owner responsible for the public improvement is the CITY OF DUBLIN, OHIO, 5200 Emerald Parkway, Dublin, Ohio 43017 .

3. The principal contractor(s) for the public improvement are as follows:

, .

4. The date the CITY OF DUBLIN first executed a contract with a principal contractor for this public improvement is .

5. The name and address of the representative for the CITY OF DUBLIN upon whom service may be made for the purposes of serving an affidavit pursuant to Section 1311.26 of the Ohio Revised Code is Paul A. Hammersmith P.E., Director of Engineering / City Engineer for the CITY OF DUBLIN, OHIO, 5800 Shier-Rings Road, Dublin, Ohio 43016.

_____ _____

Paul A. Hammersmith P.E. Date
Director of Engineering / City Engineer

The foregoing instrument was acknowledged before me this _____, day of _____, 20____ by Paul A. Hammersmith P.E., Director of Engineering / City Engineer for the CITY OF DUBLIN, OHIO.

Signature and Seal of person taking acknowledgement:

_____

F. PREVAILING WAGE BID TABULATION SHEET

Please print and complete this form. Keep it with your records until the contract has been awarded. Once the contract has been officially awarded, check mark which company was awarded the contract for the project and send or fax a copy to the Wage and Hour Division at 614-728-8639.

Contracting Public Authority: the CITY OF DUBLIN, OHIO		
Project Name:SR 161 / RIVERSIDE DRIVE ROUNDABOUT (PART1) AND RIVERSIDE DRIVE REALIGNMENT AND OTHER PUBLIC IMPROVEMENTS (PART 2)		
Project No.: 13-014.0-CIP & 13-015.0-CIP	Bid Date: Tuesday March 24, 2015	Estimate: $ 25,070,000.00

Contract Description: ☐General ☐HVAC ☐Electrical ☐Plumbing ☐Asbestos ☐Other_____

Awarded to (check)	List of Bidding Contractors	Total Bid Amount

Submitted By

Print Name: Paul A. Hammersmith P.E.	Title: Director of Engineering / City Engineer
Telephone Number: 614-410-4672 Mandy K. Bishop P.E., S.I.	Fax: 614-453-8707
Signature:	Date:

V. ADDITIONAL PROJECT FORMS

A. PAYROLL INFORMATION

PROJECT: **SR 161 / RIVERSIDE DRIVE ROUNDABOUT (PART1) AND RIVERSIDE DRIVE REALIGNMENT AND OTHER PUBLIC IMPROVEMENTS (PART 2)**

I, _____ (Name),

_____ (Title) of _____ (Company Name), state the following:

1. That I pay or supervise the payment of the persons employed by _____ (Company Name) on the above-referenced project.

2. That during the payroll period commencing on the _____ day of _____, 2015, and ending on the _____ day of _____, 2015, all persons employed on said project have been paid the full weekly wages earned; that no rebates have been or will be made either directly or indirectly to or on behalf of said _____ (Contractor/Subcontractor) from the full weekly wages earned by such persons; and that no deductions have been made either directly or indirectly from the full wages earned by such persons, other than permissible deductions as defined in Regulations, Part 3 (29 CFR Subtitle A), issued by the Secretary of Labor under the Copeland Act, as amended (48 Stat. 948, 63 Stat. 108, 72 Stat. 967; 76 Stat. 357; 40 U.S.C. 276c), and described below:

_____

_____

_____

3. That any payrolls otherwise under this Agreement for Construction (the "Agreement") required to be submitted for the above period are correct and complete; that the wage rates for laborers or mechanics contained therein are not less than the applicable wage rates contained in the specifications as supplied by the Department of Industrial Relations or any wage determination incorporated into the Agreement; and that the classifications set forth therein for each laborer or mechanic conform with the work he performed.

4. That any apprentices employed in the above period are duly registered in a bona fide apprenticeship program registered with the Ohio Apprenticeship Council.

5. That (check applicable box):

□ a. WHERE FRINGE BENEFITS ARE PAID TO APPROVED PLANS, FUNDS, OR PROGRAMS:

In addition to the basic hourly wage rates paid to each laborer or mechanic listed in the above-referenced payroll, payments of fringe benefits listed in the Agreement have been or will be made to appropriate programs for the benefit of such employees, except as noted in Section 4 below.

□ b. WHERE FRINGE BENEFITS ARE PAID IN CASH:

Each laborer or mechanic listed in the above-referenced payroll has been paid as indicated on the payroll, and amount not less than the sum of the applicable basic hourly wage rate plus the amount of the required fringe benefits as listed in the Agreement, except as noted in Section 4 below.

c. Exceptions:

Exception (Craft):	Explanation:
_____	_____
_____	_____
_____	_____
_____	_____

Remarks:

_____

_____

_____

(Signature)

_____

(Print Name and Title)

The willful falsification of any of the above statements may subject the Contractor or Subcontractor to fines as described in Section 4115.99 of the O.R.C.

B. FINAL AFFIDAVIT OF COMPLIANCE WITH PREVAILING WAGES

PROJECT: **SR 161 / RIVERSIDE DRIVE ROUNDABOUT (PART1) AND RIVERSIDE DRIVE REALIGNMENT AND OTHER PUBLIC IMPROVEMENTS (PART 2)**

STATE OF _____

COUNTY OF _____, SS:

I,_____,(Name of person signing the affidavit) _____ (Title) do hereby certify that the wages paid to all employees of _____ (Company Name) for all hours worked on project the CITY OF DUBLIN SR 161 / RIVERSIDE DRIVE ROUNDABOUT (PART1) AND RIVERSIDE DRIVE REALIGNMENT AND OTHER PUBLIC IMPROVEMENTS (PART 2) Project located at SR 161 at Riverside Drive and Riverside Drive between I-270 and approximately Martin Road during the period from _____to_____ are in compliance with the Prevailing Wage requirements of Chapter 4115 of the Ohio Revised Code. I further certify that no rebates or deductions have been or will be made, directly or indirectly, from any wages paid in connection with this project, other than those provided by law.

_____

(Signature of Affiant)

_____

(Print Name)

Sworn to and subscribed in my presence this _____ day of _____, 2015.

_____

Notary Public

The above affidavit must be executed and sworn to by the officer or agent or the Contractor/Subcontractor who supervised the payment of employees, before the CITY OF DUBLIN, OHIO will release the surety and/or make final payment due under the terms of the Agreement.

C. CONTRACTOR'S LIEN WAIVER AND RELEASE AGREEMENT

Project: SR 161 / RIVERSIDE DRIVE ROUNDABOUT (PART1) AND RIVERSIDE DRIVE REALIGNMENT AND OTHER PUBLIC IMPROVEMENTS (PART 2)

The undersigned hereby acknowledges receipt of payment from the City for all Work on the Project through the date of its prior Application for Payment. The undersigned acknowledges and agrees that the terms in this Agreement shall have the same meaning as in the Contract Documents for the Project.

In return for said payment, and/or pursuant to certain contractual obligations of the undersigned, the undersigned hereby waives and releases any rights it has or may have through the date of its last Application for Payment to any and all Claims and liens related to the Project, including without limitation: Claims of payment, mechanic's liens, liens against funds, surety bond Claims, and Claims for breach of contract or unjust enrichment. The sole exception to this waiver and release is for any Claims the undersigned has made by properly and timely submitting a Claim as required by the Contract Documents. The undersigned acknowledges and agrees that this wavier and release is intended to be a comprehensive release of all Claims and liens related to the Project, including without limitation all Claims against the City, and the employees, board members, agents and representatives of any of the foregoing persons. The undersigned further certifies that this Agreement covers Claims and liens by all persons with which it did business related to the Project, including without limitation subcontractors and suppliers, through the date of its last Application for Payment. The undersigned represents that all such persons have signed an agreement in the form of this Agreement releasing any and all Claims and liens related to the Project, except for any Claims made by properly and timely submitting a Claim as required by the Contract Documents, a copy of which has been delivered to the City. The undersigned hereby represents and warrants that it has paid any and all welfare, pension, vacation, or other contributions required to be paid on account of the employment by the undersigned of any laborers on the Project.

This Agreement is for the benefit of, and may be relied upon by the City. The undersigned hereby agrees to indemnify, defend and hold harmless each of the foregoing, the Project, work or improvement, and real property from any and all Claims, or liens that are or should have been released in accordance with this Agreement.

Contractor Name:_____

Authorized Signature: _____

Title: _____

The foregoing instrument was acknowledged before me this _____, day of _____, 20____ by _____.

Signature and Seal of person taking acknowledgement:

_____

VI. PLANS/DRAWINGS

Plans and Drawing are available at http://dublinohiousa.gov/bids-and-requests-for-proposals/ when downloading the project documents on line. If you purchase a hard copy of the project documents the plans and drawings will be on the CD included in the Bid Document and 11 X 17 printed copy as well.