BUILDING VARIETY STATEMENT

The "C" buildings at Bridge Park are bound by Riverside Drive to the west, Bridge Park Avenue to the south, Mooney Street to the east and Tuller Ridge Drive to the north. This first phase of a mixed-use development is comprised two blocks, both adjacent to Longshore Street along the north-south axis, and includes an office building (C2), two mixed-use buildings (C1 and C3) and a parking garage with residential "liners" on two facades (C4/C5). This development is designed to address the Vision Principles for the development of the Bridge Street Corridor districts, by providing an interesting, walkable setting for urban lifestyles that places value on human scale and a diversity of experiences.

Each building has a unique character which is expressed through a variety of material finishes and details, particularly at the pedestrian street level. Balconies are used extensively throughout, and windows are maximized at select corners to enhance connections to the outside environment. Pedestrian bridges connect the garage to the residential buildings, and are intended for residents' use only. The bridges are open to the outside, so as to create a feeling of connectivity with the street environment, and detailed mostly in steel. Their design emphasizes lightness and simplicity, and creates another layer of recognition to the community of Bridge Park.

Building C1, a mix of residential and retail, has a traditional arrangement of base, middle and top, each expressed with stone and storefront glazing, brick, and a combination of composite metal panels and EIFS. In some cases brick is carried down to street level or metal panels used more extensively at corners to create distinct moments. This building has a roof terrace at the second story which incorporates green elements and overlooks the park and river along Riverside Drive, and downtown Dublin beyond.

Building C2 is an office building with street-level retail. A tower element at the southwest corner, grounded by an outdoor dining patio that engages the sidewalk, provides a recognizable gateway element, further enhancing the sense of arrival and place-making. Glazing is used mostly along the ground story, alternating with a stacked-bond, accent color brick, and a corbelled brick pattern at the base of the tower. The upper stories are clad in a combination of brick, composite metal panels and glazing. The accent color brick is used as trim that accents the large-scale brick openings. Balconies at the upper stories along the west façade provide casual meeting spaces and great views to the west.

Building C3 is a combination of retail and commercial uses at the first and second levels, and residential above. This building is mostly clad in two colors of brick to create an alternating pattern. A corbelled brick pattern at the base adds another level of detail. Balconies with perforated metal guardrails and composite metal panel-clad corner elements punctuate this composition. Generous areas of glazing line the first and second stories, while a corbelled pattern of brick at the base gives texture and definition at the pedestrian level. The horizontal façade division created with a brick soldier course is playful to the eye and alternates between the first and second stories. A rooftop amenity deck gives residents additional choices for great views and outdoor social space.

Building C4/C5 has two distinct functions as a garage and a residential building. The two are woven together by the use of stone, two colors of brick and elements such as perforated metal panels, which

are used at balconies, and also as visual highlights that provide screening along the garage facades. Extensive glazing with composite metal panels is used at the two corners of the garage. The main pedestrian entry point to the garage is though the southwest corner. Transparency is maximized at this location, to create a memorable visual cue for way-finding. EIFS is used at select locations along the residential facades, to create visually lighter elements at the top stories and at balconies. The stone base height varies along the residential façades, and continues along the base of the garage elevations. A stacked brick bond is used at the residential entry as a pattern accent, which is also used on the garage elevations between bays. Planters along the west side of the garage provide elements of green and soften the experience of the building at the pedestrian level.

The two buildings on each block are separated by open spaces meant for a variety of pedestrian uses and experiences. These open spaces incorporate generous green space along with specialty paving, casual seating opportunities, outdoor dining and other flexible event spaces, creating a real sense of place and providing interesting and pleasant connections between streets. Bio-retention areas and impervious paving aid with site stormwater management, and are incorporated seamlessly into the fabric of these spaces.

BUILDING C1 (MIXED USE BUILDING) – WAIVER SUMMARY

-Vertical Increments Required: Requirement exceeded where indicated on elevation sheets. In both cases this occurs only above the fifth story windows. There are two reasons for this departure. The first is aesthetic, as the two middle bays in question work better proportionally with the wider bay spacing, and create a more balanced facade. This also creates a more varied aesthetic when looking at the overall street elevations. The second reason is that the elevator is directly behind the north façade parapet, and the desire is to not call attention to that element.

-Permitted Primary Materials: Secondary materials exceed requirement (34%). Composite metal panels and EIFS are used along with brick, stone and glass, to add visual interest and material contrast to the building. They are also used to incorporate a visually lighter 'top' to the building, to emphasize the visual proportions of base, middle and top, as well as to provide a comfortable street scale.

BUILDING C2 (CORRIDOR BUILDING) – WAIVER SUMMARY

-Permitted Primary Materials: Secondary materials exceed requirements (23%). Composite metal panels are introduced in this building as a design element, to add visual interest to the façade and provide a material/texture counterpoint to the brick and glass.

BUILDING C3 (CORRIDOR BUILDING) – WAIVER SUMMARY

-Vertical Increments Required: Requirement exceeded where indicated on north and south elevations. This occurs only at parapets above level 5 windows, once on each elevation. This is primarily a design decision, in order to maintain an "overall" bay width that has good proportions relative to the overall elevation. Required vertical increments are maintained at ground level and up to the top of the windows at level 5.

-Horizontal Façade Divisions Required: Horizontal façade divisions vary between top of ground story and top of second story. As this building is mostly brick, this allowed for a more playful, interesting and varied pedestrian experience of the building. A "corduroy pattern" (corbelling every other course) also adds to the visual interest at the building base.

BUILDING C4 (CORRIDOR BUILDING/ PARKING STRUCTURE) – WAIVER SUMMARY

-Ground Story Street Façade Transparency: 48% does not meet requirement. Maximum transparency (glazing) is provided at lobbies and public entry points. The total transparency % at the ground story is low because this building does not have a retail component (instead there are residential units on ground floor of two sides of building), and because of the substantial grade change along the North elevation.

-Blank Wall Limitations: South elevation does not meet requirement at ground story. Blank wall exceeds 15' of length at first story on South and North façades where indicated. At the south elevation, this is due to the service area at that location. At the North façade it is mainly due to the substantial grade change along this elevation. The bottom of the second floor slab is too close to the adjacent sloping grade to be able to open up the area below the slab, without this portion of the façade looking messy and fragmented.

-Number of Street Façade Entrances Required: Requirement not met because there is no retail component in this building (residential units on ground floor of two sides of building). Residential unit privacy is maintained at the street level.

-Vertical Increments Required: Requirement exceeded only at parking entry/exit on East façade. Bay width is required for traffic flow (two entries and one exit).

-Horizontal Façade Divisions: Horizontal façade divisions vary between top of ground story and top of second story. This is a design element, which allowed for a more playful, interesting and varied pedestrian experience of the building.

-Permitted Primary Materials: Secondary materials exceed requirement (28%). Composite metal panels and EIFS are used along with brick, stone and glass, to add visual interest and material contrast to the building. They are also used to incorporate a "lighter" top to the building in select locations, to emphasize the visual proportions of base, middle and top, as well as to provide a comfortable street scale. Exterior materials at the garage facades are mostly brick, glass and composite metal panels. Perforated metal panels are added to this mix to create elements of partial transparency that punctuate the rhythm of the structural bays and create interest along these elevations. The panel heights vary every other bay, creating an alternating pattern.

CONTINENTAL BUILDING SYSTEMS

Columbus Office:
150 East Broad Street
Columbus, Ohio 43215
(614) 221-1818

Pittsburgh Office:
395 E. Waterfront Drive
Homestead, PA 15120
(412) 464-8933

Cleveland Office:
23240 Chagrin Blvd, Ste 400
Beachwood, Ohio 44122
(216) 454-2500

CBS QA/QC PROGRAM OUTLINE

February, 10th 2015

CBS incorporates an in house Quality Assurance - Quality Control program to formalize and add consistency to our quality assurance process and provide for CBS project management and field personnel a reference and best practices guide to use on every project.
This QA – QC program is project specific, and all project materials and applications specific to Bridge Park are incorporated into the program.
Pre-Installation QA-QC Conferences conducted prior to installation will formally set accountability expectations for each trade contractor in regard to safety, schedule, manpower, and quality.

The Quality Assurance section will include a listing of the project specific items that when executed, will result in the successful completion of the contract requirements while in the process assuring a quality end product.
The Quality Control section will include a checklist of materials and processes that require verification by the project superintendent that our requirements are met.

In addition to our in-house QA/QC measures, the Project will incorporate an **accredited third party consultant** to monitor and verify that the exterior envelope systems installations are in accordance to the manufactures recommendations, and fully test for compliance.

These observations and testing will include;

Building Envelope Consulting (Pre-Construction)

- Review Project specifications and construction drawings.
- Submit a written report identifying any areas of concern related to weather ability, thermal continuity, products, and performance as designed.
- Review of construction sequencing and schedule.

Building Envelope Consulting (Construction Phase)

- Attend building enclosure skin components on-site pre-construction meetings
- Submit reports noting adherence to specifications and standards..
- Review the construction and detailing of exterior wall mock-ups per building type.
- Develop a site specific daily field inspection checklist.
- Perform on site/ in-field daily inspections throughout the installation of building enclosure systems.
- Inspect roofing sub straight conditions, surface preparation, and membrane application.
- Conduct final inspections and punch list.

Building Envelope Consulting (Performance Testing)

- Water penetration testing
- Water spray testing
- Sealant adhesion testing
- Infra-red thermograph of building envelope components, and roofing
- Create a report delineating any vapor transfer locations, moisture infiltration, thermo graphic images with photographs of construction details.
- Finalize project commissioning with warranties and close out documentation

All testing and field reports will be available anytime for review by the project team including the Owner, the Architect, project consultants, and The City of Dublin.

With this two part system in place, we are confident that all products and materials installed on the Bridge Park project will meet or exceed manufactures recommendations, ensuring that Bridge Park will perform and look as good in years to come as it does at completion.

Morgan Rogers
Project Executive
Continental Building Systems

Weekday & Weekend Parking Demand Study

Per Urban Land Institute's *Shared Parking, Second Editon*

12/2/2014

Park & Self-Capture 10% +/-, not factored

CRAWFORD HOYING development

Bridge Park East-Block A&B Combined

	WEEKDAY CALCULATIONS																			Max	Min
	6 a.m.	7 a.m.	8 a.m.	9 a.m.	10 a.m.	11 a.m.	noon	1 p.m.	2 p.m	3 p.m.	4 p.m.	5 p.m.	6 p.m.	7 p.m.	8 p.m.	9 p.m.	10 p.m.	11 p.m.	midnight		
Total Parking Demand	486	601	952	1,059	1,189	1,275	1,313	1,325	1,356	1,225	1,189	1,233	1,129	1,056	988	994	799	705	546		
Total Parking Provided	1,223	1,223	1,223	1,223	1,223	1,223	1,223	1,223	1,223	1,223	1,223	1,223	1,223	1,223	1,223	1,223	1,223	1,223	1,223		
Net Surplus (Deficit)	**737**	**622**	**271**	**164**	**34**	**(52)**	**(90)**	**(102)**	**(133)**	**(2)**	**34**	**(10)**	**94**	**167**	**235**	**229**	**424**	**518**	**677**	737	(133)
% of Surplus (Deficit)	**152%**	**104%**	**29%**	**15%**	**3%**	**-4%**	**-7%**	**-8%**	**-10%**	**0%**	**3%**	**-1%**	**8%**	**16%**	**24%**	**23%**	**53%**	**74%**	**124%**		

	WEEKEND CALCULATIONS																		
	6 a.m.	7 a.m.	8 a.m.	9 a.m.	10 a.m.	11 a.m.	noon	1 p.m.	2 p.m	3 p.m.	4 p.m.	5 p.m.	6 p.m.	7 p.m.	8 p.m.	9 p.m.	10 p.m.	11 p.m.	midnight
Total Parking Demand	474	516	787	1,023	1,075	1,168	1,258	1,267	1,241	1,183	1,165	1,232	1,342	1,356	1,322	1,163	1,010	861	661
Total Parking Provided	1,223	1,223	1,223	1,223	1,223	1,223	1,223	1,223	1,223	1,223	1,223	1,223	1,223	1,223	1,223	1,223	1,223	1,223	1,223
Net Surplus (Deficit)	**749**	**707**	**436**	**200**	**148**	**55**	**(35)**	**(44)**	**(18)**	**40**	**58**	**(9)**	**(119)**	**(133)**	**(99)**	**60**	**213**	**362**	**562**
% of Surplus (Deficit)	**158%**	**137%**	**55%**	**20%**	**14%**	**5%**	**-3%**	**-4%**	**-1%**	**3%**	**5%**	**-1%**	**-9%**	**-10%**	**-7%**	**5%**	**21%**	**42%**	**85%**

749 (133)

Bridge Park East-Block B&C Combined

	WEEKDAY CALCULATIONS																				
	6 a.m.	7 a.m.	8 a.m.	9 a.m.	10 a.m.	11 a.m.	noon	1 p.m.	2 p.m	3 p.m.	4 p.m.	5 p.m.	6 p.m.	7 p.m.	8 p.m.	9 p.m.	10 p.m.	11 p.m.	midnight		
Total Parking Demand	552	674	963	971	1,242	1,459	1,616	1,632	1,618	1,340	1,308	1,513	1,632	1,633	1,477	1,469	1,220	1,022	685		
Total Parking Provided	1,849	1,849	1,849	1,849	1,849	1,849	1,849	1,849	1,849	1,849	1,849	1,849	1,849	1,849	1,849	1,849	1,849	1,849	1,849		
Net Surplus (Deficit)	**1,297**	**1,175**	**886**	**878**	**607**	**390**	**233**	**217**	**231**	**509**	**541**	**336**	**217**	**216**	**372**	**380**	**629**	**827**	**1,164**	1,297	216
% of Surplus (Deficit)	**235%**	**174%**	**92%**	**90%**	**49%**	**27%**	**14%**	**13%**	**14%**	**38%**	**41%**	**22%**	**13%**	**13%**	**25%**	**26%**	**52%**	**81%**	**170%**		

	WEEKEND CALCULATIONS																				
	6 a.m.	7 a.m.	8 a.m.	9 a.m.	10 a.m.	11 a.m.	noon	1 p.m.	2 p.m	3 p.m.	4 p.m.	5 p.m.	6 p.m.	7 p.m.	8 p.m.	9 p.m.	10 p.m.	11 p.m.	midnight		
Total Parking Demand	538	586	642	734	871	1,077	1,295	1,321	1,247	1,121	1,087	1,235	1,485	1,516	1,416	1,274	1,191	1,086	811		
Total Parking Provided	1,849	1,849	1,849	1,849	1,849	1,849	1,849	1,849	1,849	1,849	1,849	1,849	1,849	1,849	1,849	1,849	1,849	1,849	1,849		
Net Surplus (Deficit)	**1,311**	**1,263**	**1,207**	**1,115**	**978**	**772**	**554**	**528**	**602**	**728**	**762**	**614**	**364**	**333**	**433**	**575**	**658**	**763**	**1,038**	1,311	333
% of Surplus (Deficit)	**244%**	**215%**	**188%**	**152%**	**112%**	**72%**	**43%**	**40%**	**48%**	**65%**	**70%**	**50%**	**25%**	**22%**	**31%**	**45%**	**55%**	**70%**	**128%**		

Parking Demand Study
Bridge Park East-Block B
Per Urban Land Institute's *Shared Parking, Second Editon*
12/2/2014

CRAWFORD HOYING development

Total Parking Provided **898**	**852** Structured	**46** Street

PEAK PARKING DEMANDS BY USE - PRIOR TO ADJUSTING FOR TIME OF DAY

Users	weekday					weekend				
Retail (<400,000 sf)										
Employees	0.70	per 1ksf x	24.63	ksf =	17 spaces	0.8	per unit x	24.63	ksf =	20 spaces
Visitors	2.90	per 1ksf x	24.63	ksf =	71 spaces	3.2	per unit x	24.63	ksf =	79 spaces
Subtotal					89 spaces					99 spaces
Fine or Casual Dining										
Employees	2.50	per unit x	19.20	ksf=	48 spaces	2.50	per unit x	19.20	ksf=	48 spaces
Visitors	10.00	per unit x	19.20	ksf=	192 spaces	10.00	per unit x	19.20	ksf=	192 spaces
Subtotal					240 spaces					240 spaces
Quick Casual Dining										
Employees	2.50	per unit x	19.20	ksf=	48 spaces	2.50	per unit x	19.20	ksf=	48 spaces
Visitors	7.50	per unit x	19.20	ksf=	144 spaces	7.50	per unit x	19.20	ksf=	144 spaces
Subtotal					192 spaces					192 spaces
Residential										
Tenants	1.23	per unit x	249	units =	306 spaces	1.23	per unit x	249	units =	306 spaces
Visitors	0.15	per unit x	249	units =	37 spaces	0.15	per unit x	249	units =	37 spaces
Subtotal					343 spaces					343 spaces
Office (<50,000 sf)										
Employees	3.50	per unit x	46.37	ksf=	162 spaces	0.35	per unit x	46.37	ksf=	16 spaces
Visitors	0.30	per unit x	46.37	ksf=	14 spaces	0.03	per unit x	46.37	ksf=	1 spaces
Subtotal					176 spaces					18 spaces

Total	**1,040**
Surplus (Deficit)	**(142)**

Total	**891**
Surplus (Deficit)	**7**

Residential Unit Mix	Units	Parks	#
Studio	23	1.00	23
1 Bedoom	123	1.00	123
2 Bedroom	93	1.50	140
3 Bedroom	10	2.00	20
	249		306
Per Unit			1.23
Per Bedroom			0.84

Weekday Parking Demand Study
Bridge Park East-Block B
Per Urban Land Institute's *Shared Parking, Second Editon*
12/2/2014

CRAWFORD HOYING development

Total Parking Demand	**327**	**358**	**458**	**418**	**536**	**634**	**711**	**718**	**704**	**583**	**578**	**729**	**803**	**824**	**756**	**736**	**636**	**543**	**387**
Total Parking Provided	**898**	**898**	**898**	**898**	**898**	**898**	**898**	**898**	**898**	**898**	**898**	**898**	**898**	**898**	**898**	**898**	**898**	**898**	**898**
Net Surplus (Deficit)	**571**	**540**	**440**	**480**	**362**	**264**	**187**	**180**	**194**	**315**	**320**	**169**	**95**	**74**	**142**	**162**	**262**	**355**	**511**
% of Surplus (Deficit)	**174%**	**151%**	**96%**	**115%**	**68%**	**42%**	**26%**	**25%**	**28%**	**54%**	**55%**	**23%**	**12%**	**9%**	**19%**	**22%**	**41%**	**65%**	**132%**

WEEKDAY CALCULATIONS

Users	**6 a.m.**	**7 a.m.**	**8 a.m.**	**9 a.m.**	**10 a.m.**	**11 a.m.**	**noon**	**1 p.m.**	**2 p.m**	**3 p.m.**	**4 p.m.**	**5 p.m.**	**6 p.m.**	**7 p.m.**	**8 p.m.**	**9 p.m.**	**10 p.m.**	**11 p.m.**	**midnight**
Retail (<400,000sf)																			
Employees	10%	15%	40%	75%	85%	95%	100%	100%	100%	100%	100%	95%	95%	95%	90%	75%	40%	15%	0%
	2	3	7	13	15	16	17	17	17	17	17	16	16	16	16	13	7	3	0
Visitors	1%	5%	15%	35%	65%	85%	95%	100%	95%	90%	90%	95%	95%	95%	80%	50%	30%	10%	0%
	1	4	11	25	46	61	68	71	68	64	64	68	68	68	57	36	21	7	0
Subtotal	**2**	**6**	**18**	**38**	**61**	**77**	**85**	**89**	**85**	**82**	**82**	**84**	**84**	**84**	**73**	**49**	**28**	**10**	**0**
Fine or Casual Dining																			
Employees	0%	20%	50%	75%	90%	90%	90%	90%	90%	75%	75%	100%	100%	100%	100%	100%	100%	85%	35%
	0	10	24	36	43	43	43	43	43	36	36	48	48	48	48	48	48	41	17
Visitors	0%	0%	0%	0%	15%	40%	75%	75%	65%	40%	50%	75%	95%	100%	100%	100%	95%	75%	25%
	0	0	0	0	29	77	144	144	125	77	96	144	182	192	192	192	182	144	48
Subtotal	**0**	**10**	**24**	**36**	**72**	**120**	**187**	**187**	**168**	**113**	**132**	**192**	**230**	**240**	**240**	**240**	**230**	**185**	**65**
Quick Casual Dining																			
Employees	15%	20%	30%	40%	75%	100%	100%	100%	95%	70%	60%	70%	90%	90%	60%	40%	30%	20%	20%
	7	10	14	19	36	48	48	48	46	34	29	34	43	43	29	19	14	10	10
Visitors	5%	10%	20%	30%	55%	85%	100%	100%	90%	60%	55%	60%	85%	80%	50%	30%	20%	10%	5%
	7	14	29	43	79	122	144	144	130	86	79	86	122	115	72	43	29	14	7
Subtotal	**14**	**24**	**43**	**62**	**115**	**170**	**192**	**192**	**175**	**120**	**108**	**120**	**166**	**158**	**101**	**62**	**43**	**24**	**17**
Residential																			
Tenants	100%	87%	79%	**37%**	**34%**	**30%**	**30%**	**30%**	**30%**	**31%**	**33%**	77%	85%	94%	96%	98%	99%	100%	100%
	306	266	241	112	104	90	92	90	92	93	101	235	260	287	293	299	302	306	306
Visitors	0%	10%	20%	20%	20%	20%	20%	20%	20%	20%	20%	40%	60%	100%	100%	100%	80%	50%	0%
	0	4	7	7	7	7	7	7	7	7	7	15	22	37	37	37	30	19	0
Subtotal	**306**	**270**	**249**	**119**	**111**	**98**	**99**	**98**	**99**	**101**	**108**	**250**	**282**	**325**	**331**	**337**	**332**	**324**	**306**
Office (<50,000 sf)																			
Employees	3%	30%	75%	95%	100%	100%	90%	90%	100%	100%	90%	50%	25%	10%	7%	30%	1%	0%	0%
	5	49	122	154	162	162	146	146	162	162	146	81	41	16	11	49	2	0	0
Visitors	0%	1%	20%	60%	100%	45%	15%	45%	100%	45%	15%	10%	5%	2%	1%	0%	0%	0%	0%
	0	0	3	8	14	6	2	6	14	6	2	1	1	0	0	0	0	0	0
Subtotal	**5**	**49**	**125**	**163**	**176**	**169**	**148**	**152**	**176**	**169**	**148**	**83**	**41**	**17**	**12**	**49**	**2**	**0**	**0**

Weekend Parking Demand Study
Bridge Park East-Block B
Per Urban Land Institute's *Shared Parking, Second Editon*
12/2/2014

CRAWFORD HOYING development

Total Parking Demand	**323**	**342**	**360**	**399**	**457**	**547**	**647**	**660**	**631**	**578**	**565**	**637**	**751**	**770**	**728**	**665**	**623**	**570**	**442**
Total Parking Provided	**898**	**898**	**898**	**898**	**898**	**898**	**898**	**898**	**898**	**898**	**898**	**898**	**898**	**898**	**898**	**898**	**898**	**898**	**898**
Net Surplus (Deficit)	**575**	**556**	**538**	**499**	**441**	**351**	**251**	**238**	**267**	**320**	**333**	**261**	**147**	**128**	**170**	**233**	**275**	**328**	**456**
% of Surplus (Deficit)	**178%**	**163%**	**149%**	**125%**	**97%**	**64%**	**39%**	**36%**	**42%**	**55%**	**59%**	**41%**	**20%**	**17%**	**23%**	**35%**	**44%**	**57%**	**103%**

WEEKEND CALCULATIONS

Users	**6 a.m.**	**7 a.m.**	**8 a.m.**	**9 a.m.**	**10 a.m.**	**11 a.m.**	**noon**	**1 p.m.**	**2 p.m**	**3 p.m.**	**4 p.m.**	**5 p.m.**	**6 p.m.**	**7 p.m.**	**8 p.m.**	**9 p.m.**	**10 p.m.**	**11 p.m.**	**midnight**
Retail (<400,000sf)																			
Employees	10%	15%	40%	75%	85%	95%	100%	100%	100%	100%	100%	95%	95%	95%	90%	75%	40%	15%	0%
	2	3	8	15	17	19	20	20	20	20	20	19	19	19	18	15	8	3	0
Visitors	1%	5%	10%	30%	50%	65%	80%	90%	100%	100%	95%	90%	80%	75%	65%	50%	35%	15%	0%
	1	4	8	24	39	51	63	71	79	79	75	71	63	59	51	39	28	12	0
Subtotal	**3**	**7**	**16**	**38**	**56**	**70**	**83**	**91**	**99**	**99**	**95**	**90**	**82**	**78**	**69**	**54**	**35**	**15**	**0**
Fine or Casual Dining																			
Employees	0%	20%	30%	60%	75%	75%	75%	75%	75%	75%	75%	100%	100%	100%	100%	100%	100%	85%	50%
	0	10	14	29	36	36	36	36	36	36	36	48	48	48	48	48	48	41	24
Visitors	0%	0%	0%	0%	0%	15%	50%	55%	45%	45%	45%	60%	90%	95%	100%	90%	90%	90%	50%
	0	0	0	0	0	29	96	106	86	86	86	115	173	182	192	173	173	173	96
Subtotal	**0**	**10**	**14**	**29**	**36**	**65**	**132**	**142**	**122**	**122**	**122**	**163**	**221**	**230**	**240**	**221**	**221**	**214**	**120**
Quick Casual Dining																			
Employees	15%	20%	30%	40%	75%	100%	100%	100%	95%	70%	60%	70%	90%	90%	60%	40%	30%	20%	20%
	7	10	14	19	36	48	48	48	46	34	29	34	43	43	29	19	14	10	10
Visitors	5%	10%	20%	30%	55%	85%	100%	100%	90%	60%	55%	60%	85%	80%	50%	30%	20%	10%	5%
	7	14	29	43	79	122	144	144	130	86	79	86	122	115	72	43	29	14	7
Subtotal	**14**	**24**	**43**	**62**	**115**	**170**	**192**	**192**	**175**	**120**	**108**	**120**	**166**	**158**	**101**	**62**	**43**	**24**	**17**
Residential																			
Tenants	100%	95%	88%	81%	74%	71%	71%	70%	71%	73%	75%	81%	85%	87%	92%	95%	96%	98%	100%
	306	290	269	247	226	217	217	214	217	223	229	247	260	266	281	290	293	299	306
Visitors	0%	20%	20%	20%	20%	20%	20%	20%	20%	20%	20%	40%	60%	100%	100%	100%	80%	50%	0%
	0	7	7	7	7	7	7	7	7	7	7	15	22	37	37	37	30	19	0
Subtotal	**306**	**298**	**276**	**255**	**234**	**224**	**224**	**221**	**224**	**230**	**237**	**262**	**282**	**303**	**318**	**328**	**323**	**318**	**306**
Office (<50,000 sf)																			
Employees	0%	20%	60%	80%	90%	100%	90%	80%	60%	40%	20%	10%	5%	0%	0%	0%	0%	0%	0%
	0	3	10	13	15	16	15	13	10	6	3	2	1	0	0	0	0	0	0
Visitors	0%	20%	60%	80%	90%	100%	90%	80%	60%	40%	20%	10%	5%	0%	0%	0%	0%	0%	0%
	0	0	1	1	1	1	1	1	1	1	0	0	0	0	0	0	0	0	0
Subtotal	**0**	**4**	**11**	**14**	**16**	**18**	**16**	**14**	**11**	**7**	**4**	**2**	**1**	**0**	**0**	**0**	**0**	**0**	**0**

Parking Demand Study
Bridge Park East-Block C
Per Urban Land Institute's *Shared Parking, Second Editon*
12/2/2014

CRAWFORD HOYING development

Total Parking Provided **951**	**888** Structured	**63** Street

PEAK PARKING DEMANDS BY USE - PRIOR TO ADJUSTING FOR TIME OF DAY

Users	weekday				weekend			
Retail (<400,000 sf)								
Employees	0.70	per 1ksf x	18.46	ksf =	13	spaces	0.8	per unit x	18.456	ksf =	15	spaces
Visitors	2.90	per 1ksf x	18.46	ksf =	54	spaces	3.2	per unit x	18.456	ksf =	59	spaces
Subtotal					66	spaces					74	spaces
Fine or Casual Dining												
Employees	2.50	per unit x	24.41	ksf=	61	spaces	2.50	per unit x	24.414	ksf=	61	spaces
Visitors	10.00	per unit x	24.41	ksf=	244	spaces	10.00	per unit x	24.414	ksf=	244	spaces
Subtotal					305	spaces					305	spaces
Quick Casual Dining												
Employees	2.50	per unit x	24.41	ksf=	61	spaces	2.50	per unit x	24.414	ksf=	61	spaces
Visitors	7.50	per unit x	24.41	ksf=	183	spaces	7.50	per unit x	24.414	ksf=	183	spaces
Subtotal					244	spaces					244	spaces
Residential												
Tenants	1.22	per unit x	160.00	units =	195	spaces	1.22	per unit x	160	units =	195	spaces
Visitors	0.15	per unit x	160.00	units =	24	spaces	0.15	per unit x	160	units =	24	spaces
Subtotal					219	spaces					219	spaces
Office (<50,000 sf)												
Employees	3.50	per unit x	92.372	ksf=	323	spaces	0.35	per unit x	92.372	ksf=	32	spaces
Visitors	0.30	per unit x	92.372	ksf=	28	spaces	0.03	per unit x	92.372	ksf=	3	spaces
Subtotal					351	spaces					35	spaces

Total	**1,185**
Surplus (Deficit)	**(234)**

Total	**877**
Surplus (Deficit)	**74**

Residential Unit Mix	Units	Parks	#
Studio	12	1.00	12.00
1 Bedoom	86	1.00	86.00
2 Bedroom	55	1.50	82.50
3 Bedroom	7	2.00	14.00
	160		195
Per Unit			1.22
Per Bedroom			0.85

Weekday Parking Demand Study
Bridge Park East-Block C
Per Urban Land Institute's *Shared Parking, Second Editon*
12/2/2014

CRAWFORD HOYING development

Total Parking Demand	**224**	**316**	**505**	**553**	**706**	**825**	**904**	**914**	**914**	**757**	**730**	**784**	**829**	**809**	**721**	**733**	**584**	**479**	**298**
Total Parking Provided	**951**	**951**	**951**	**951**	**951**	**951**	**951**	**951**	**951**	**951**	**951**	**951**	**951**	**951**	**951**	**951**	**951**	**951**	**951**
Net Surplus (Deficit)	**727**	**635**	**446**	**398**	**245**	**126**	**47**	**37**	**37**	**194**	**221**	**167**	**122**	**142**	**230**	**218**	**367**	**472**	**653**
% of Surplus (Deficit)	**324%**	**201%**	**88%**	**72%**	**35%**	**15%**	**5%**	**4%**	**4%**	**26%**	**30%**	**21%**	**15%**	**17%**	**32%**	**30%**	**63%**	**98%**	**219%**

WEEKDAY CALCULATIONS

Users	**6 a.m.**	**7 a.m.**	**8 a.m.**	**9 a.m.**	**10 a.m.**	**11 a.m.**	**noon**	**1 p.m.**	**2 p.m**	**3 p.m.**	**4 p.m.**	**5 p.m.**	**6 p.m.**	**7 p.m.**	**8 p.m.**	**9 p.m.**	**10 p.m.**	**11 p.m.**	**midnight**
Retail (<400,000sf)																			
Employees	10%	15%	40%	75%	85%	95%	100%	100%	100%	100%	100%	95%	95%	95%	90%	75%	40%	15%	0%
	1	2	5	10	11	12	13	13	13	13	13	12	12	12	12	10	5	2	0
Visitors	1%	5%	15%	35%	65%	85%	95%	100%	95%	90%	90%	95%	95%	95%	80%	50%	30%	10%	0%
	1	3	8	19	35	45	51	54	51	48	48	51	51	51	43	27	16	5	0
Subtotal	**2**	**5**	**13**	**28**	**46**	**58**	**64**	**66**	**64**	**61**	**61**	**63**	**63**	**63**	**54**	**36**	**21**	**7**	**0**
Fine or Casual Dining																			
Employees	0%	20%	50%	75%	90%	90%	90%	90%	90%	75%	75%	100%	100%	100%	100%	100%	100%	85%	35%
	0	12	31	46	55	55	55	55	55	46	46	61	61	61	61	61	61	52	21
Visitors	0%	0%	0%	0%	15%	40%	75%	75%	65%	40%	50%	75%	95%	100%	100%	100%	95%	75%	25%
	0	0	0	0	37	98	183	183	159	98	122	183	232	244	244	244	232	183	61
Subtotal	**0**	**12**	**31**	**46**	**92**	**153**	**238**	**238**	**214**	**143**	**168**	**244**	**293**	**305**	**305**	**305**	**293**	**235**	**82**
Quick Casual Dining																			
Employees	15%	20%	30%	40%	75%	100%	100%	100%	95%	70%	60%	70%	90%	90%	60%	40%	30%	20%	20%
	9	12	18	24	46	61	61	61	58	43	37	43	55	55	37	24	18	12	12
Visitors	5%	10%	20%	30%	55%	85%	100%	100%	90%	60%	55%	60%	85%	80%	50%	30%	20%	10%	5%
	9	18	37	55	101	156	183	183	165	110	101	110	156	146	92	55	37	18	9
Subtotal	**18**	**31**	**55**	**79**	**146**	**217**	**244**	**244**	**223**	**153**	**137**	**153**	**211**	**201**	**128**	**79**	**55**	**31**	**21**
Residential																			
Tenants	100%	87%	79%	**37%**	**34%**	**30%**	**30%**	**30%**	**30%**	**31%**	**33%**	77%	85%	94%	96%	98%	99%	100%	100%
	195	169	154	71	66	57	58	57	58	59	64	150	165	183	187	191	193	195	195
Visitors	0%	10%	20%	20%	20%	20%	20%	20%	20%	20%	20%	40%	60%	100%	100%	100%	80%	50%	0%
	0	2	5	5	5	5	5	5	5	5	5	10	14	24	24	24	19	12	0
Subtotal	**195**	**172**	**158**	**76**	**71**	**62**	**63**	**62**	**63**	**64**	**69**	**159**	**180**	**207**	**211**	**215**	**212**	**207**	**195**
Office (<50,000 sf)																			
Employees	3%	30%	75%	95%	100%	100%	90%	90%	100%	100%	90%	50%	25%	10%	7%	30%	1%	0%	0%
	10	97	242	307	323	323	291	291	323	323	291	162	81	32	23	97	3	0	0
Visitors	0%	1%	20%	60%	100%	45%	15%	45%	100%	45%	15%	10%	5%	2%	1%	0%	0%	0%	0%
	0	0	6	17	28	12	4	12	28	12	4	3	1	1	0	0	0	0	0
Subtotal	**10**	**97**	**248**	**324**	**351**	**336**	**295**	**303**	**351**	**336**	**295**	**164**	**82**	**33**	**23**	**97**	**3**	**0**	**0**

Weekend Parking Demand Study
Bridge Park East-Block C
Per Urban Land Institute's *Shared Parking, Second Editon*
12/2/2014

CRAWFORD HOYING development

Total Parking Demand	**215**	**244**	**282**	**335**	**415**	**529**	**648**	**661**	**616**	**543**	**522**	**598**	**734**	**746**	**688**	**609**	**568**	**516**	**368**
Total Parking Provided	**951**	**951**	**951**	**951**	**951**	**951**	**951**	**951**	**951**	**951**	**951**	**951**	**951**	**951**	**951**	**951**	**951**	**951**	**951**
Net Surplus (Deficit)	**736**	**707**	**669**	**616**	**536**	**422**	**303**	**290**	**335**	**408**	**429**	**353**	**217**	**205**	**263**	**342**	**383**	**435**	**583**
% of Surplus (Deficit)	**343%**	**289%**	**237%**	**184%**	**129%**	**80%**	**47%**	**44%**	**54%**	**75%**	**82%**	**59%**	**30%**	**27%**	**38%**	**56%**	**67%**	**84%**	**158%**

WEEKEND CALCULATIONS

Users	**6 a.m.**	**7 a.m.**	**8 a.m.**	**9 a.m.**	**10 a.m.**	**11 a.m.**	**noon**	**1 p.m.**	**2 p.m**	**3 p.m.**	**4 p.m.**	**5 p.m.**	**6 p.m.**	**7 p.m.**	**8 p.m.**	**9 p.m.**	**10 p.m.**	**11 p.m.**	**midnight**
Retail (<400,000sf)																			
Employees	10%	15%	40%	75%	85%	95%	100%	100%	100%	100%	100%	95%	95%	95%	90%	75%	40%	15%	0%
	1	2	6	11	13	14	15	15	15	15	15	14	14	14	13	11	6	2	0
Visitors	1%	5%	10%	30%	50%	65%	80%	90%	100%	100%	95%	90%	80%	75%	65%	50%	35%	15%	0%
	1	3	6	18	30	38	47	53	59	59	56	53	47	44	38	30	21	9	0
Subtotal	**2**	**5**	**12**	**29**	**42**	**52**	**62**	**68**	**74**	**74**	**71**	**67**	**61**	**58**	**52**	**41**	**27**	**11**	**0**
Fine or Casual Dining																			
Employees	0%	20%	30%	60%	75%	75%	75%	75%	75%	75%	75%	100%	100%	100%	100%	100%	100%	85%	50%
	0	12	18	37	46	46	46	46	46	46	46	61	61	61	61	61	61	52	31
Visitors	0%	0%	0%	0%	0%	15%	50%	55%	45%	45%	45%	60%	90%	95%	100%	90%	90%	90%	50%
	0	0	0	0	0	37	122	134	110	110	110	146	220	232	244	220	220	220	122
Subtotal	**0**	**12**	**18**	**37**	**46**	**82**	**168**	**180**	**156**	**156**	**156**	**208**	**281**	**293**	**305**	**281**	**281**	**272**	**153**
Quick Casual Dining																			
Employees	15%	20%	30%	40%	75%	100%	100%	100%	95%	70%	60%	70%	90%	90%	60%	40%	30%	20%	20%
	9	12	18	24	46	61	61	61	58	43	37	43	55	55	37	24	18	12	12
Visitors	5%	10%	20%	30%	55%	85%	100%	100%	90%	60%	55%	60%	85%	80%	50%	30%	20%	10%	5%
	9	18	37	55	101	156	183	183	165	110	101	110	156	146	92	55	37	18	9
Subtotal	**18**	**31**	**55**	**79**	**146**	**217**	**244**	**244**	**223**	**153**	**137**	**153**	**211**	**201**	**128**	**79**	**55**	**31**	**21**
Residential																			
Tenants	100%	95%	88%	81%	74%	71%	71%	70%	71%	73%	75%	81%	85%	87%	92%	95%	96%	98%	100%
	195	185	171	158	144	138	138	136	138	142	146	158	165	169	179	185	187	191	195
Visitors	0%	20%	20%	20%	20%	20%	20%	20%	20%	20%	20%	40%	60%	100%	100%	100%	80%	50%	0%
	0	5	5	5	5	5	5	5	5	5	5	10	14	24	24	24	19	12	0
Subtotal	**195**	**190**	**176**	**162**	**149**	**143**	**143**	**141**	**143**	**147**	**151**	**167**	**180**	**193**	**203**	**209**	**206**	**203**	**195**
Office (<50,000 sf)																			
Employees	0%	20%	60%	80%	90%	100%	90%	80%	60%	40%	20%	10%	5%	0%	0%	0%	0%	0%	0%
	0	6	19	26	29	32	29	26	19	13	6	3	2	0	0	0	0	0	0
Visitors	0%	20%	60%	80%	90%	100%	90%	80%	60%	40%	20%	10%	5%	0%	0%	0%	0%	0%	0%
	0	1	2	2	2	3	2	2	2	1	1	0	0	0	0	0	0	0	0
Subtotal	**0**	**7**	**21**	**28**	**32**	**35**	**32**	**28**	**21**	**14**	**7**	**4**	**2**	**0**	**0**	**0**	**0**	**0**	**0**

Parking Demand Study
Bridge Park East-Block A
Per Urban Land Institute's *Shared Parking, Second Editon*
10/9/2014

CRAWFORD HOYING development

Total Parking Provided	**325** Structured

PEAK PARKING DEMANDS BY USE - PRIOR TO ADJUSTING FOR TIME OF DAY

Users	weekday					weekend				
Hotel										
Employees	0.25	per unit x	156.00	room	39	spaces	0.18	per unit x	156	ksf=	28	spaces
Visitors	1.00	per unit x	156.00	room	156	spaces	1.00	per unit x	156	ksf=	156	spaces
Subtotal					195	spaces					184	spaces
Hotel Convention Center (>50sf/guest room)												
Employees	1.00	per unit x	20.76	ksf=	21	spaces	2.00	per unit x	20.756	ksf=	42	spaces
Visitors	10.00	per unit x	20.76	ksf=	208	spaces	20.00	per unit x	20.756	ksf=	415	spaces
Subtotal					228	spaces					457	spaces
Office (>50,000 sf)												
Employees	3.00	per unit x	85.00	ksf=	255	spaces	0.30	per unit x	85	ksf=	26	spaces
Visitors	0.25	per unit x	85.00	ksf=	21	spaces	0.02	per unit x	85	ksf=	2	spaces
Subtotal					276	spaces					27	spaces
Medical/Dental Office												
Employees	1.5	per unit x	0	ksf=	0	spaces	1.50	per unit x	0	ksf=	0	spaces
Visitors	3	per unit x	0	ksf=	0	spaces	3.00	per unit x	0	ksf=	0	spaces
Subtotal					0	spaces					0	spaces

Total	**700**
Surplus (Deficit)	**(375)**

Total	**668**
Surplus (Deficit)	**(343)**

Weekday Parking Demand Study
Bridge Park East-Block A
Per Urban Land Institute's *Shared Parking, Second Editon*
10/9/2014

CRAWFORD HOYING development

Total Parking Demand	**159**	**243**	**493**	**641**	**653**	**641**	**601**	**608**	**653**	**641**	**611**	**504**	**325**	**233**	**233**	**257**	**163**	**162**	**159**
Total Parking Provided	**325**	**325**	**325**	**325**	**325**	**325**	**325**	**325**	**325**	**325**	**325**	**325**	**325**	**325**	**325**	**325**	**325**	**325**	**325**
Net Surplus (Deficit)	**166**	**82**	**(168)**	**(316)**	**(328)**	**(316)**	**(276)**	**(283)**	**(328)**	**(316)**	**(286)**	**(179)**	**(0)**	**92**	**92**	**68**	**162**	**163**	**166**
% of Surplus (Deficit)	**105%**	**34%**	**-34%**	**-49%**	**-50%**	**-49%**	**-46%**	**-47%**	**-50%**	**-49%**	**-47%**	**-35%**	**0%**	**40%**	**40%**	**26%**	**100%**	**101%**	**104%**

WEEKDAY CALCULATIONS

Users	**6 a.m.**	**7 a.m.**	**8 a.m.**	**9 a.m.**	**10 a.m.**	**11 a.m.**	**noon**	**1 p.m.**	**2 p.m**	**3 p.m.**	**4 p.m.**	**5 p.m.**	**6 p.m.**	**7 p.m.**	**8 p.m.**	**9 p.m.**	**10 p.m.**	**11 p.m.**	**midnight**
Hotel																			
Employees	5%	30%	90%	90%	100%	100%	100%	100%	100%	100%	90%	70%	40%	20%	20%	20%	20%	10%	5%
	2	12	35	35	39	39	39	39	39	39	35	27	16	8	8	8	8	4	2
Visitors	95%	95%	90%	80%	70%	70%	65%	65%	70%	70%	75%	80%	85%	85%	90%	95%	95%	100%	100%
	148	148	140	125	109	109	101	101	109	109	117	125	133	133	140	148	148	156	156
Subtotal	**150**	**160**	**176**	**160**	**148**	**148**	**140**	**140**	**148**	**148**	**152**	**152**	**148**	**140**	**148**	**156**	**156**	**160**	**158**
Hotel Convention Center																			
Employees	5%	30%	90%	90%	100%	100%	100%	100%	100%	100%	90%	70%	40%	20%	20%	20%	20%	10%	5%
	1	6	19	19	21	21	21	21	21	21	19	15	8	4	4	4	4	2	1
Visitors	0%	0%	50%	100%	100%	100%	100%	100%	100%	100%	100%	100%	50%	30%	30%	10%	0%	0%	0%
	0	0	104	208	208	208	208	208	208	208	208	208	104	62	62	21	0	0	0
Subtotal	**1**	**6**	**122**	**226**	**228**	**228**	**228**	**228**	**228**	**228**	**226**	**222**	**112**	**66**	**66**	**25**	**4**	**2**	**1**
Office (>50,000 sf)																			
Employees	3%	30%	75%	95%	100%	100%	90%	90%	100%	100%	90%	50%	25%	10%	7%	30%	1%	0%	0%
	8	77	191	242	255	255	230	230	255	255	230	128	64	26	18	77	3	0	0
Visitors	0%	1%	20%	60%	100%	45%	15%	45%	100%	45%	15%	10%	5%	2%	1%	0%	0%	0%	0%
	0	0	4	13	21	10	3	10	21	10	3	2	1	0	0	0	0	0	0
Subtotal	**8**	**77**	**196**	**255**	**276**	**265**	**233**	**239**	**276**	**265**	**233**	**130**	**65**	**26**	**18**	**77**	**3**	**0**	**0**
Medical/Dental Office																			
Employees	0%	0%	60%	100%	100%	100%	100%	100%	100%	100%	100%	100%	67%	30%	15%	0%	0%	0%	0%
	0	0	0	0	0	0	0	0	0	0	0	0	0	0	0	0	0	0	0
Visitors	0%	0%	90%	90%	100%	100%	30%	90%	100%	100%	90%	80%	67%	30%	15%	0%	0%	0%	0%
	0	0	0	0	0	0	0	0	0	0	0	0	0	0	0	0	0	0	0
Subtotal	**0**	**0**	**0**	**0**	**0**	**0**	**0**	**0**	**0**	**0**	**0**	**0**	**0**	**0**	**0**	**0**	**0**	**0**	**0**

Weekend Parking Demand Study
Bridge Park East-Block A
Per Urban Land Institute's *Shared Parking, Second Editon*
10/9/2014

CRAWFORD HOYING development

Total Parking Demand	**152**	**175**	**427**	**624**	**618**	**621**	**611**	**608**	**610**	**605**	**600**	**595**	**591**	**586**	**594**	**498**	**387**	**291**	**218**
Total Parking Provided	**325**	**325**	**325**	**325**	**325**	**325**	**325**	**325**	**325**	**325**	**325**	**325**	**325**	**325**	**325**	**325**	**325**	**325**	**325**
Net Surplus (Deficit)	**173**	**150**	**(102)**	**(299)**	**(293)**	**(296)**	**(286)**	**(283)**	**(285)**	**(280)**	**(275)**	**(270)**	**(266)**	**(261)**	**(269)**	**(173)**	**(62)**	**34**	**107**
% of Surplus (Deficit)	**114%**	**86%**	**-24%**	**-48%**	**-47%**	**-48%**	**-47%**	**-47%**	**-47%**	**-46%**	**-46%**	**-45%**	**-45%**	**-45%**	**-45%**	**-35%**	**-16%**	**12%**	**49%**

WEEKEND CALCULATIONS

Users	**6 a.m.**	**7 a.m.**	**8 a.m.**	**9 a.m.**	**10 a.m.**	**11 a.m.**	**noon**	**1 p.m.**	**2 p.m**	**3 p.m.**	**4 p.m.**	**5 p.m.**	**6 p.m.**	**7 p.m.**	**8 p.m.**	**9 p.m.**	**10 p.m.**	**11 p.m.**	**midnight**
Hotel																			
Employees	5%	30%	90%	90%	100%	100%	100%	100%	100%	100%	90%	75%	60%	55%	55%	55%	45%	45%	30%
	1	8	25	25	28	28	28	28	28	28	25	21	17	15	15	15	13	13	8
Visitors	95%	95%	90%	80%	70%	70%	65%	65%	70%	70%	75%	80%	85%	85%	90%	95%	95%	100%	100%
	148	148	140	125	109	109	101	101	109	109	117	125	133	133	140	148	148	156	156
Subtotal	**150**	**157**	**166**	**150**	**137**	**137**	**129**	**129**	**137**	**137**	**142**	**146**	**149**	**148**	**156**	**164**	**161**	**169**	**164**
Hotel Convention Center																			
Employees	5%	30%	90%	90%	100%	100%	100%	100%	100%	100%	90%	75%	60%	55%	55%	55%	45%	45%	30%
	2	12	37	37	42	42	42	42	42	42	37	31	25	23	23	23	19	19	12
Visitors	0%	0%	50%	100%	100%	100%	100%	100%	100%	100%	100%	100%	100%	100%	100%	75%	50%	25%	10%
	0	0	208	415	415	415	415	415	415	415	415	415	415	415	415	311	208	104	42
Subtotal	**2**	**12**	**245**	**452**	**457**	**457**	**457**	**457**	**457**	**457**	**452**	**446**	**440**	**438**	**438**	**334**	**226**	**122**	**54**
Office (>50,000 sf)																			
Employees	0%	20%	60%	80%	90%	100%	90%	80%	60%	40%	20%	10%	5%	0%	0%	0%	0%	0%	0%
	0	5	15	20	23	26	23	20	15	10	5	3	1	0	0	0	0	0	0
Visitors	0%	20%	60%	80%	90%	100%	90%	80%	60%	40%	20%	10%	5%	0%	0%	0%	0%	0%	0%
	0	0	1	1	2	2	2	1	1	1	0	0	0	0	0	0	0	0	0
Subtotal	**0**	**5**	**16**	**22**	**24**	**27**	**24**	**22**	**16**	**11**	**5**	**3**	**1**	**0**	**0**	**0**	**0**	**0**	**0**
Medical/Dental Office																			
Employees	0%	0%	60%	100%	100%	100%	100%	0%	0%	0%	0%	0%	0%	0%	0%	0%	0%	0%	0%
	0	0	0	0	0	0	0	0	0	0	0	0	0	0	0	0	0	0	0
Visitors	0%	0%	90%	90%	100%	100%	30%	0%	0%	0%	0%	0%	0%	0%	0%	0%	0%	0%	0%
	0	0	0	0	0	0	0	0	0	0	0	0	0	0	0	0	0	0	0
Subtotal	**0**	**0**	**0**	**0**	**0**	**0**	**0**	**0**	**0**	**0**	**0**	**0**	**0**	**0**	**0**	**0**	**0**	**0**	**0**

Parking Demand Study
Bridge Park East-Block G
Per Urban Land Institute's *Shared Parking, Second Editon*
10/9/2014

CRAWFORD HOYING development

Total Parking Provided **36**	**0** Structured	**36** Street

PEAK PARKING DEMANDS BY USE - PRIOR TO ADJUSTING FOR TIME OF DAY

Users	weekday					weekend				
Retail (<400,000 sf)										
Employees	0.70	per 1ksf x	1.92	ksf =	1 spaces	0.8	per unit x	1.919	ksf =	2 spaces
Visitors	2.90	per 1ksf x	1.92	ksf =	6 spaces	3.2	per unit x	1.919	ksf =	6 spaces
Subtotal					7 spaces					8 spaces
Fine or Casual Dining										
Employees	2.75	per unit x	9.48	ksf=	26 spaces	3.00	per unit x	9.48	ksf=	28 spaces
Visitors	15.25	per unit x	9.48	ksf=	145 spaces	17.00	per unit x	9.48	ksf=	161 spaces
Subtotal					171 spaces					190 spaces
Quick Casual Dining										
Employees	2.25	per unit x	0.00	ksf=	0 spaces	2.00	per unit x	0	ksf=	0 spaces
Visitors	12.75	per unit x	0.00	ksf=	0 spaces	12.00	per unit x	0	ksf=	0 spaces
Subtotal					0 spaces					0 spaces
Residential										
Tenants	**1.20**	per unit x	106.00	units =	128 spaces	1.20	per unit x	106	units =	128 spaces
Visitors	0.15	per unit x	106.00	units =	16 spaces	0.15	per unit x	106	units =	16 spaces
Subtotal					143 spaces					143 spaces
				Total	321				Total	341
				Surplus (Deficit)	(285)				Surplus (Deficit)	(305)

Residential Unit Mix	Units	Parks	#
Studio	4	1.00	4.00
1 Bedoom	66	1.00	66.00
2 Bedroom	29	1.50	43.50
3 Bedroom	7	2.00	14.00
	106		127.50
Per Unit			1.20
Per Bedroom			0.86

Weekday Parking Demand Study
Bridge Park East-Block G
Per Urban Land Institute's *Shared Parking, Second Editon*
10/9/2014

CRAWFORD HOYING development

Total Parking Demand	**#REF!**	**#REF!**	**#REF!**	**#REF!**	**#REF!**	**#REF!**	**#REF!**	**#REF!**	**#REF!**	**#REF!**	**#REF!**	**#REF!**	**#REF!**	**#REF!**	**#REF!**	**#REF!**	**#REF!**	**#REF!**	**#REF!**
Total Parking Provided	**36**	**36**	**36**	**36**	**36**	**36**	**36**	**36**	**36**	**36**	**36**	**36**	**36**	**36**	**36**	**36**	**36**	**36**	**36**
Net Surplus (Deficit)	**#REF!**	**#REF!**	**#REF!**	**#REF!**	**#REF!**	**#REF!**	**#REF!**	**#REF!**	**#REF!**	**#REF!**	**#REF!**	**#REF!**	**#REF!**	**#REF!**	**#REF!**	**#REF!**	**#REF!**	**#REF!**	**#REF!**
% of Surplus (Deficit)	**#REF!**	**#REF!**	**#REF!**	**#REF!**	**#REF!**	**#REF!**	**#REF!**	**#REF!**	**#REF!**	**#REF!**	**#REF!**	**#REF!**	**#REF!**	**#REF!**	**#REF!**	**#REF!**	**#REF!**	**#REF!**	**#REF!**

WEEKDAY CALCULATIONS

Users	**6 a.m.**	**7 a.m.**	**8 a.m.**	**9 a.m.**	**10 a.m.**	**11 a.m.**	**noon**	**1 p.m.**	**2 p.m**	**3 p.m.**	**4 p.m.**	**5 p.m.**	**6 p.m.**	**7 p.m.**	**8 p.m.**	**9 p.m.**	**10 p.m.**	**11 p.m.**	**midnight**
Community Shopping Center (<500,000sf)																			
#REF!	10%	15%	40%	75%	85%	95%	100%	100%	100%	100%	100%	95%	95%	95%	90%	75%	40%	15%	0%
	0	0	1	1	1	1	1	1	1	1	1	1	1	1	1	1	1	0	0
#REF!	1%	5%	15%	35%	65%	85%	95%	100%	95%	90%	90%	95%	95%	95%	80%	50%	30%	10%	0%
	0	0	1	2	4	5	5	6	5	5	5	5	5	5	4	3	2	1	0
#REF!	**0**	**0**	**1**	**3**	**5**	**6**	**7**	**7**	**7**	**6**	**6**	**7**	**7**	**7**	**6**	**4**	**2**	**1**	**0**
Fine or Casual Dining																			
Employees	0%	20%	50%	75%	90%	90%	90%	90%	90%	75%	75%	100%	100%	100%	100%	100%	100%	85%	35%
	0	5	13	20	23	23	23	23	23	20	20	26	26	26	26	26	26	22	9
Visitors	0%	0%	0%	0%	15%	40%	75%	75%	65%	40%	50%	75%	95%	100%	100%	100%	95%	75%	25%
	0	0	0	0	22	58	108	108	94	58	72	108	137	145	145	145	137	108	36
Subtotal	**0**	**5**	**13**	**20**	**45**	**81**	**132**	**132**	**117**	**77**	**92**	**134**	**163**	**171**	**171**	**171**	**163**	**131**	**45**
Quick Casual Dining																			
Employees	15%	20%	30%	40%	75%	100%	100%	100%	95%	70%	60%	70%	90%	90%	60%	40%	30%	20%	20%
	0	0	0	0	0	0	0	0	0	0	0	0	0	0	0	0	0	0	0
Visitors	5%	10%	20%	30%	55%	85%	100%	100%	90%	60%	55%	60%	85%	80%	50%	30%	20%	10%	5%
	0	0	0	0	0	0	0	0	0	0	0	0	0	0	0	0	0	0	0
Subtotal	**0**	**0**	**0**	**0**	**0**	**0**	**0**	**0**	**0**	**0**	**0**	**0**	**0**	**0**	**0**	**0**	**0**	**0**	**0**
Residential																			
Tenants	100%	87%	79%	73%	68%	59%	60%	59%	60%	61%	66%	77%	85%	94%	96%	98%	99%	100%	100%
	128	111	101	93	87	75	77	75	77	78	84	98	108	120	122	125	126	128	128
Visitors	0%	10%	20%	20%	20%	20%	20%	20%	20%	20%	20%	40%	60%	100%	100%	100%	80%	50%	0%
	0	2	3	3	3	3	3	3	3	3	3	6	10	16	16	16	13	8	0
Subtotal	**128**	**113**	**104**	**96**	**90**	**78**	**80**	**78**	**80**	**81**	**87**	**105**	**118**	**136**	**138**	**141**	**139**	**135**	**128**

Weekend Parking Demand Study
Bridge Park East-Block G
Per Urban Land Institute's *Shared Parking, Second Editon*
10/9/2014

CRAWFORD HOYING development

Total Parking Demand	**#REF!**	**#REF!**	**#REF!**	**#REF!**	**#REF!**	**#REF!**	**#REF!**	**#REF!**	**#REF!**	**#REF!**	**#REF!**	**#REF!**	**#REF!**	**#REF!**	**#REF!**	**#REF!**	**#REF!**	**#REF!**	**#REF!**
Total Parking Provided	**36**	**36**	**36**	**36**	**36**	**36**	**36**	**36**	**36**	**36**	**36**	**36**	**36**	**36**	**36**	**36**	**36**	**36**	**36**
Net Surplus (Deficit)	**#REF!**	**#REF!**	**#REF!**	**#REF!**	**#REF!**	**#REF!**	**#REF!**	**#REF!**	**#REF!**	**#REF!**	**#REF!**	**#REF!**	**#REF!**	**#REF!**	**#REF!**	**#REF!**	**#REF!**	**#REF!**	**#REF!**
% of Surplus (Deficit)	**#REF!**	**#REF!**	**#REF!**	**#REF!**	**#REF!**	**#REF!**	**#REF!**	**#REF!**	**#REF!**	**#REF!**	**#REF!**	**#REF!**	**#REF!**	**#REF!**	**#REF!**	**#REF!**	**#REF!**	**#REF!**	**#REF!**

WEEKEND CALCULATIONS

Users	**6 a.m.**	**7 a.m.**	**8 a.m.**	**9 a.m.**	**10 a.m.**	**11 a.m.**	**noon**	**1 p.m.**	**2 p.m**	**3 p.m.**	**4 p.m.**	**5 p.m.**	**6 p.m.**	**7 p.m.**	**8 p.m.**	**9 p.m.**	**10 p.m.**	**11 p.m.**	**midnight**
Community Shopping Center (<500,000sf)																			
#REF!	10%	15%	40%	75%	85%	95%	100%	100%	100%	100%	100%	95%	95%	95%	90%	75%	40%	15%	0%
	0	0	1	1	1	1	2	2	2	2	2	1	1	1	1	1	1	0	0
#REF!	1%	5%	10%	30%	50%	65%	80%	90%	100%	100%	95%	90%	80%	75%	65%	50%	35%	15%	0%
	0	0	1	2	3	4	5	6	6	6	6	6	5	5	4	3	2	1	0
#REF!	**0**	**1**	**1**	**3**	**4**	**5**	**6**	**7**	**8**	**8**	**7**	**7**	**6**	**6**	**5**	**4**	**3**	**1**	**0**
Fine or Casual Dining																			
Employees	0%	20%	30%	60%	75%	75%	75%	75%	75%	75%	75%	100%	100%	100%	100%	100%	100%	85%	50%
	0	6	9	17	21	21	21	21	21	21	21	28	28	28	28	28	28	24	14
Visitors	0%	0%	0%	0%	0%	15%	50%	55%	45%	45%	45%	60%	90%	95%	100%	90%	90%	90%	50%
	0	0	0	0	0	24	81	89	73	73	73	97	145	153	161	145	145	145	81
Subtotal	**0**	**6**	**9**	**17**	**21**	**46**	**102**	**110**	**94**	**94**	**94**	**125**	**173**	**182**	**190**	**173**	**173**	**169**	**95**
Quick Casual Dining																			
Employees	15%	20%	30%	40%	75%	100%	100%	100%	95%	70%	60%	70%	90%	90%	60%	40%	30%	20%	20%
	0	0	0	0	0	0	0	0	0	0	0	0	0	0	0	0	0	0	0
Visitors	5%	10%	20%	30%	55%	85%	100%	100%	90%	60%	55%	60%	85%	80%	50%	30%	20%	10%	5%
	0	0	0	0	0	0	0	0	0	0	0	0	0	0	0	0	0	0	0
Subtotal	**0**	**0**	**0**	**0**	**0**	**0**	**0**	**0**	**0**	**0**	**0**	**0**	**0**	**0**	**0**	**0**	**0**	**0**	**0**
Residential																			
Tenants	100%	95%	88%	81%	74%	71%	71%	70%	71%	73%	75%	81%	85%	87%	92%	95%	96%	98%	100%
	128	121	112	103	94	91	91	89	91	93	96	103	108	111	117	121	122	125	128
Visitors	0%	20%	20%	20%	20%	20%	20%	20%	20%	20%	20%	40%	60%	100%	100%	100%	80%	50%	0%
	0	3	3	3	3	3	3	3	3	3	3	6	10	16	16	16	13	8	0
Subtotal	**128**	**124**	**115**	**106**	**98**	**94**	**94**	**92**	**94**	**96**	**99**	**110**	**118**	**127**	**133**	**137**	**135**	**133**	**128**

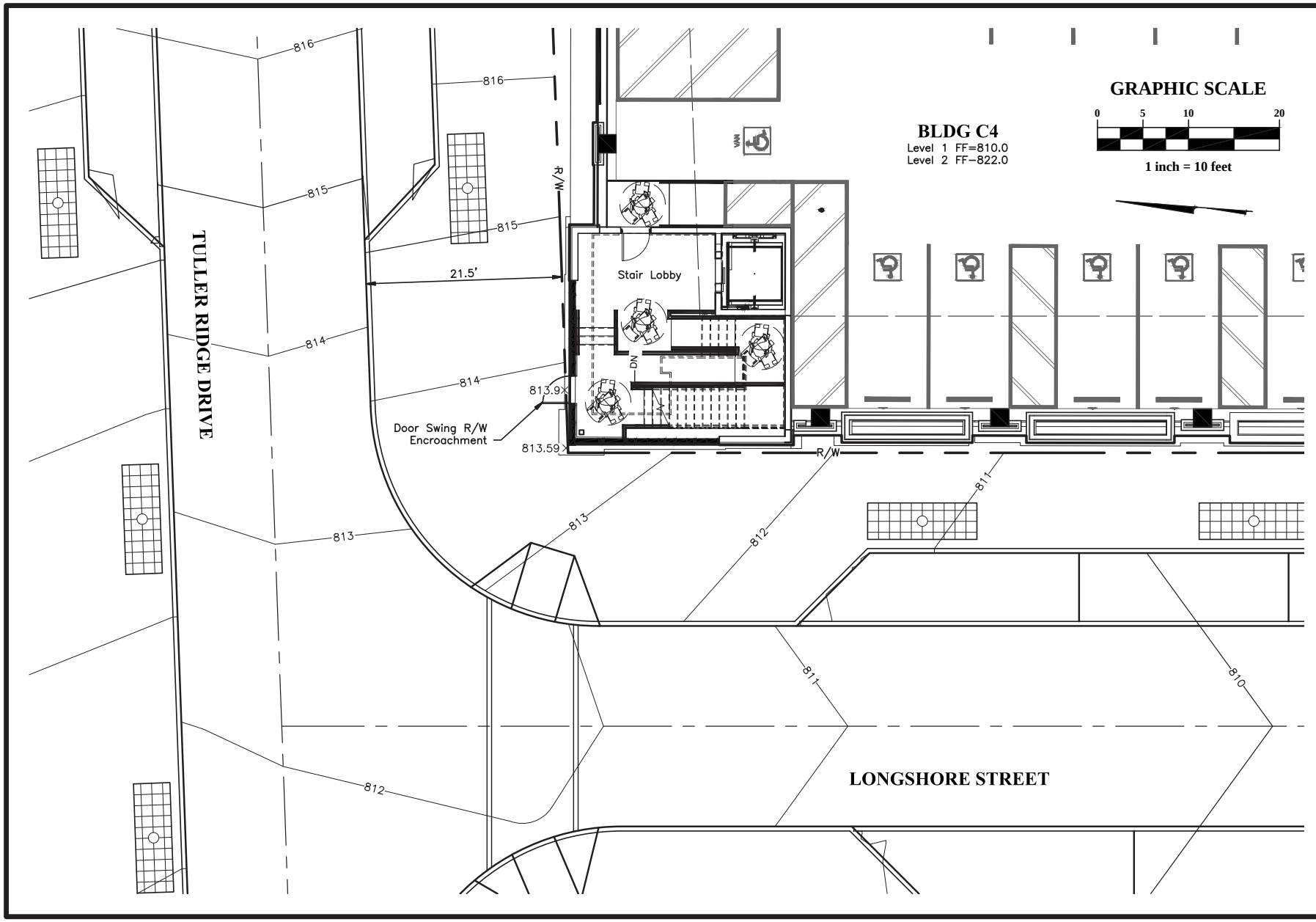

DATE: March 30, 2015

SCALE: As Noted

JOB NO.: 2013-1481

CITY OF DUBLIN, FRANKLIN COUNTY, OHIO

EXHIBIT

FOR

BUILDING C4
NORTHWEST ENTRANCE

EMHT
Evans, Mechwart, Hambleton & Tilton, Inc.
Engineers • Surveyors • Planners • Scientists
5500 New Albany Road, Columbus, OH 43054
Phone: 614.775.4500 Toll Free: 888.775.3648
emht.com

J:\20131481\Dwg\04Sheets\Exhibits\C4 NW Entrance.dwg Last Saved By: bfranz, 3/30/2015 11:17 AM Last Printed By: Franz, Bryan, 3/30/2015 11:27 AM (No Xrefs)

GREENHECK
Building Value in Air.

Garage exhaust fan, two speed

NORTH ELEVATIONS OF C4/C5

Printed Date: 6/4/2014
Job: 14108
Mark: 17,500 CFM PROP EXHAUST FAN

Model: SBE-2L48-30

Sidewall Belt Drive Exhaust Fan

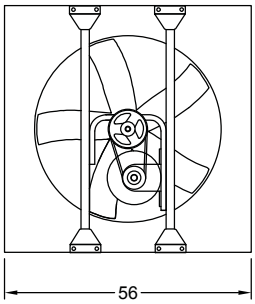

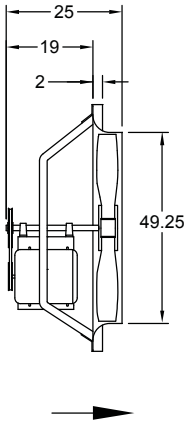

AIR FLOW

See the Assembly Drawing For Selected Accessories

Dimensional	
Quantity	1
Weight w/o Acc's (lb)	228
Weight w/ Acc's (lb)	438
Max T Motor Frame Size	184
Wall Opening (in.)	57.75 x 57.75

Performance	
Requested Volume (CFM)	17,500
Actual Volume (CFM)	17,500
External SP (in. wg)	0.25
Total SP (in. wg)	0.25
Fan RPM	408
Operating Power (hp)	1.86
Elevation (ft)	817
Airstream Temp.(F)	70
Air Density (ft3)	0.073
Drive Loss (%)	5.0
Tip Speed (ft/min)	5,121
Static Eff. (%)	39

Motor	
Motor Mounted	Yes
Size (hp)	3
V/C/P	460/60/3
Enclosure	ODP
Motor RPM	1725_860
Windings	2
NEC FLA* (Amps)	4.8

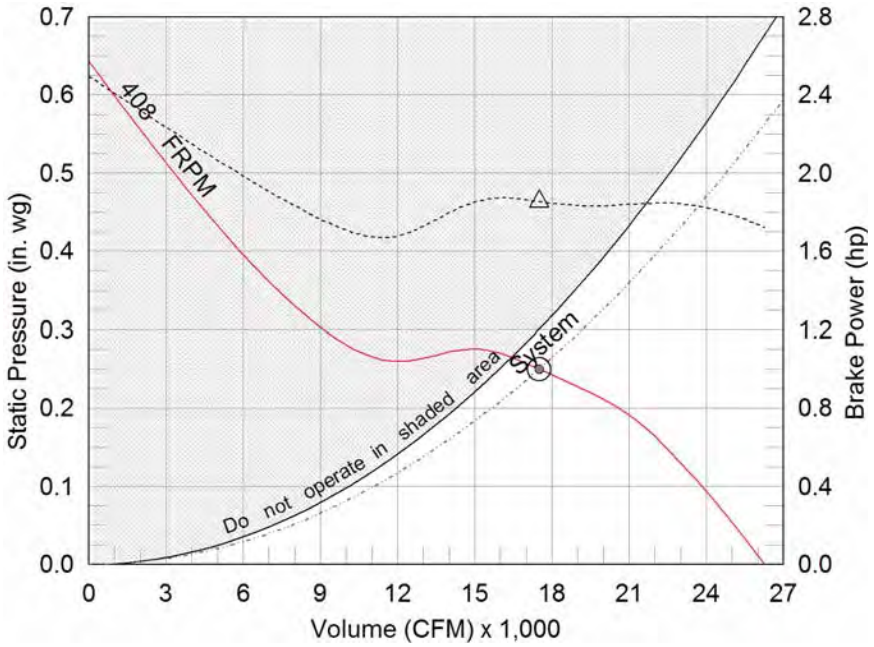

Sound Power by Octave Band

Sound Data	62.5	125	250	500	1000	2000	4000	8000	LwA	dBA	Sones
Inlet	86	87	81	77	74	70	65	60	80	69	18.1

Notes:
All dimensions shown are in units of in..
*FLA - based on tables 150 or 148 of National Electrical Code 2002. Actual motor FLA may vary, for sizing thermal overload, consult factory.
LwA - A weighted sound power level, based on ANSI S1.4
dBA - A weighted sound pressure level, based on 11.5 dB attenuation per Octave band at 5 ft - dBA levels are not licensed by AMCA International
Sones - calculated using AMCA 301 at 5 ft

amca CERTIFIED RATINGS SOUND AND AIR PERFORMANCE

Model: SBE-2L48-30

Sidewall Belt Drive Exhaust Fan

Standard Construction Features:

- Galvanized steel fan panel - Die formed, galvanized steel drive frame assembly - Fabricated steel propeller for Levels 1 and 2, welded and painted steel for Level 3 - Adjustable motor pulley - Ball bearing motors - Fan shaft mounted in ball bearing pillow blocks - Static resistant belts - Corrosion resistant fasteners

Options & Accessories:

Short Wall Hsg, Flush Int., (2A-Exh), w/ OSHA Grd.
Switch, NEMA-1, Toggle, Junction Box Mounted & Wired
Bearings with Grease Fittings
Unit Warranty: 1 Yr (Standard)

Assembly Drawing

Type: Sidewall Belt Drive Exhaust Fan

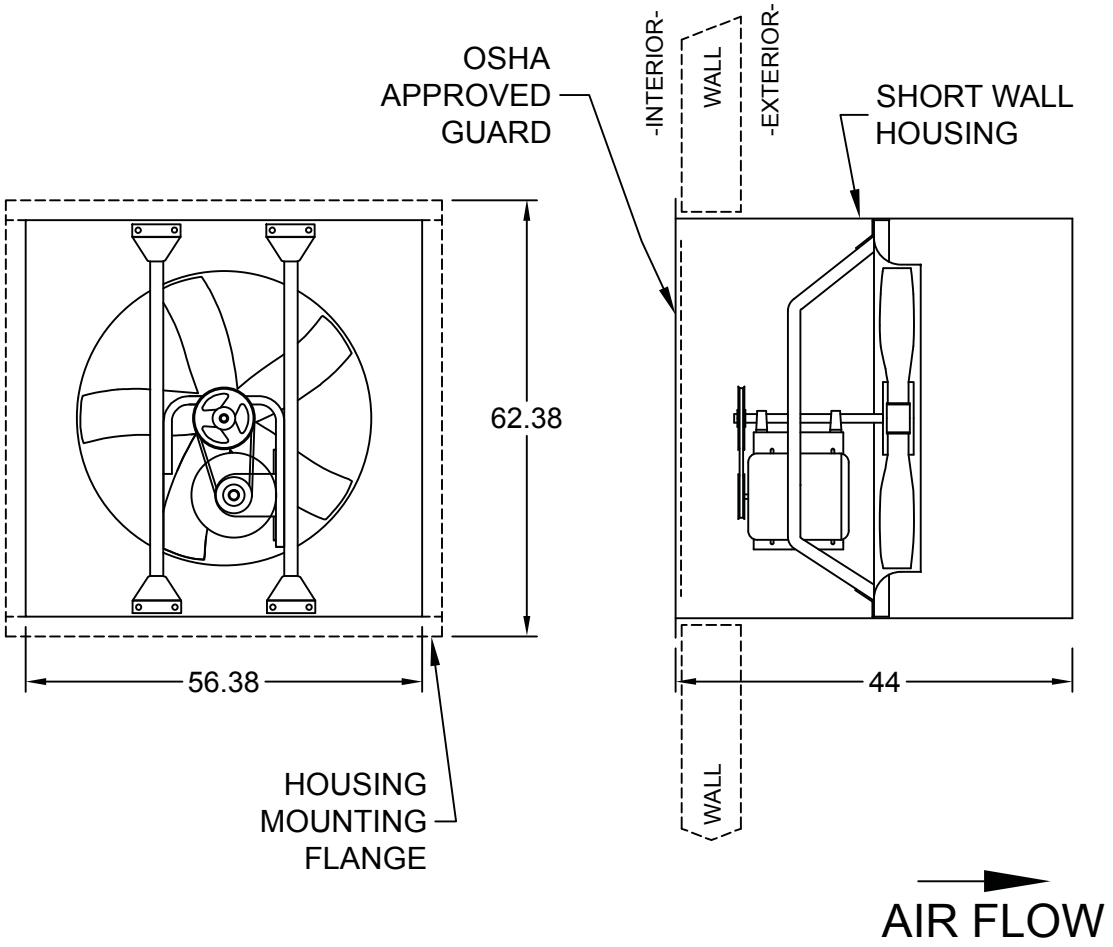

WALL OPENING 57.75 SQ.

Notes: All dimensions shown are in units of in..

Model: SBE-2H48-20

Sidewall Belt Drive Exhaust Fan

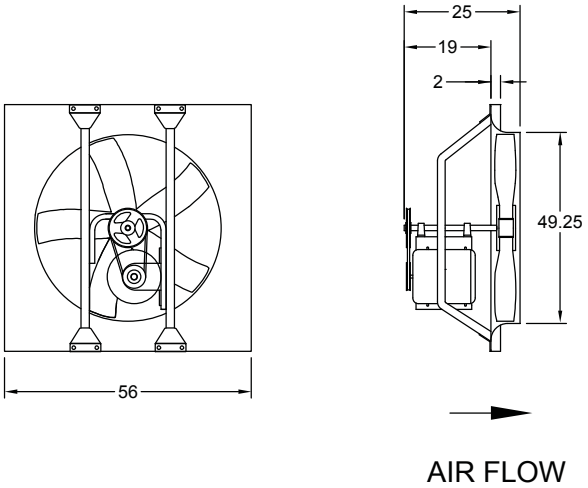

See the Assembly Drawing For Selected Accessories

Dimensional	
Quantity	1
Weight w/o Acc's (lb)	207
Weight w/ Acc's (lb)	417
Max T Motor Frame Size	184
Wall Opening (in.)	57.75 x 57.75

Performance	
Requested Volume (CFM)	14,500
Actual Volume (CFM)	14,500
External SP (in. wg)	0.25
Total SP (in. wg)	0.25
Fan RPM	443
Operating Power (hp)	1.37
Elevation (ft)	817
Airstream Temp.(F)	70
Air Density (ft3)	0.073
Drive Loss (%)	5.5
Tip Speed (ft/min)	5,567
Static Eff. (%)	44

Motor	
Motor Mounted	Yes
Size (hp)	2
V/C/P	460/60/3
Enclosure	ODP
Motor RPM	1725_860
Windings	2
NEC FLA* (Amps)	3.4

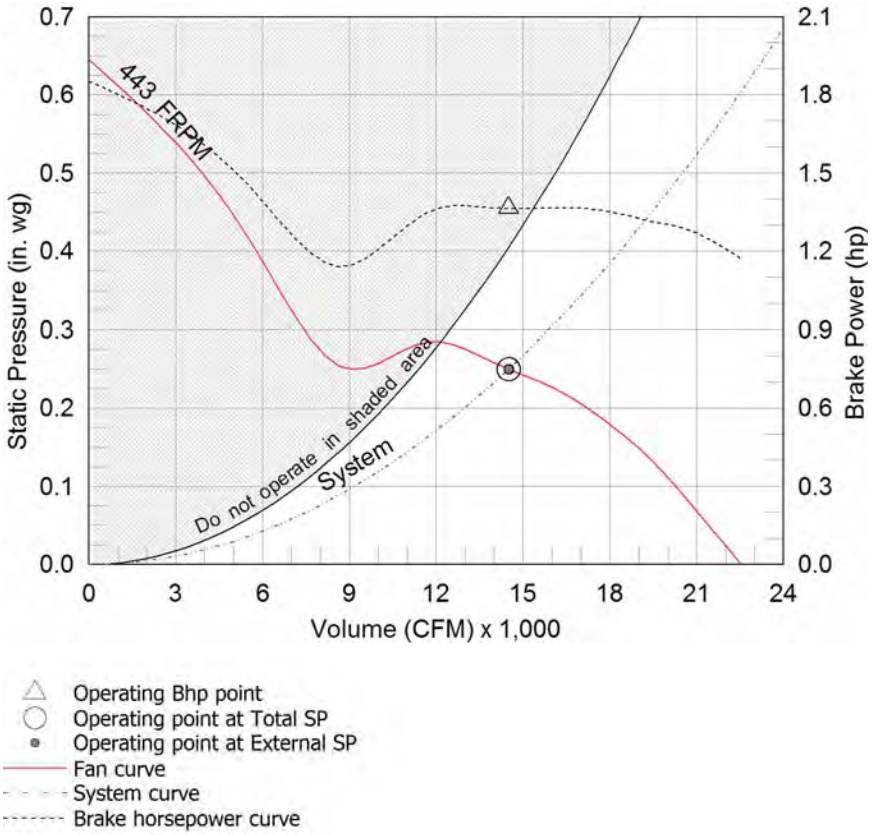

Sound Power by Octave Band

Sound Data	62.5	125	250	500	1000	2000	4000	8000	LwA	dBA	Sones
Inlet	85	81	82	76	75	72	67	62	80	69	17.1

Notes:

All dimensions shown are in units of in..
*FLA - based on tables 150 or 148 of National Electrical Code 2002. Actual motor FLA may vary, for sizing thermal overload, consult factory.
LwA - A weighted sound power level, based on ANSI S1.4
dBA - A weighted sound pressure level, based on 11.5 dB attenuation per Octave band at 5 ft - dBA levels are not licensed by AMCA International
Sones - calculated using AMCA 301 at 5 ft

Model: SBE-2H48-20

Sidewall Belt Drive Exhaust Fan

Standard Construction Features:

- Galvanized steel fan panel - Die formed, galvanized steel drive frame assembly - Fabricated steel propeller for Levels 1 and 2, welded and painted steel for Level 3 - Adjustable motor pulley - Ball bearing motors - Fan shaft mounted in ball bearing pillow blocks - Static resistant belts - Corrosion resistant fasteners

Options & Accessories:

Short Wall Hsg, Flush Int., (2A-Exh), w/ OSHA Grd.
Switch, NEMA-1, Toggle, Junction Box Mounted & Wired
Bearings with Grease Fittings
Unit Warranty: 1 Yr (Standard)

Assembly Drawing

Type: Sidewall Belt Drive Exhaust Fan

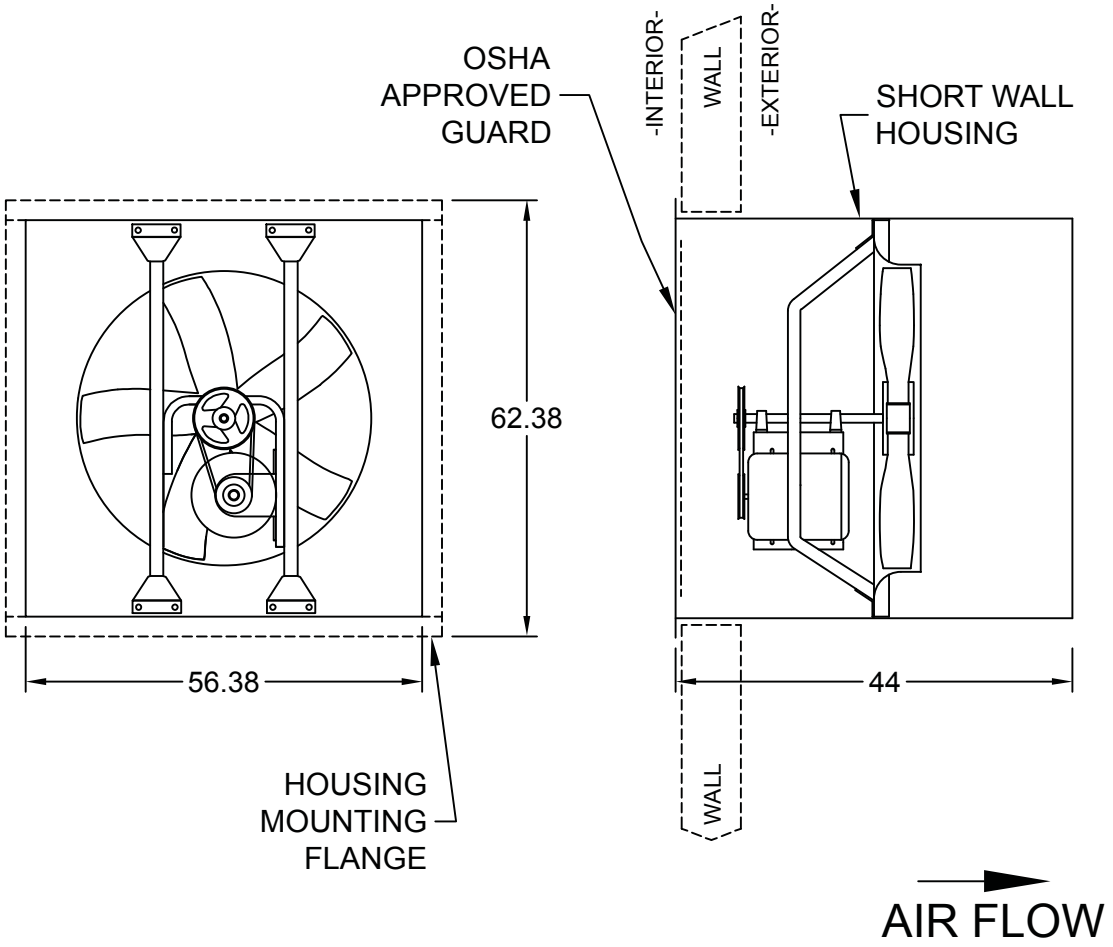

WALL OPENING 57.75 SQ.

Notes: All dimensions shown are in units of in..

A Marley Engineered Products Brand

heaters for interstitial spaces

Compact Freeze Protection Unit Heater

CHPR25

NEW

26 lbs • Standard hanging bracket supplied

Concealed Space Use

Zero Clearance

Plenum Rated

Model CHPR25 is a unique application heater approved for installation in a concealed space, an area between a finished ceiling and drop ceiling, a plenum space, or inside a plenum. It may be installed in areas that are not readily accessible and may be installed for freeze protection.

- 18 ga. all steel casing with neutral grey polyester powder coat finish for corrosion protection
- Easy to install using the hanging bracket supplied
- Steel finned low watt density element. Fins and elements are arranged in a uniform grid pattern to assure that all incoming air passes through the heating element.
- High limit thermal cutout automatically shuts off current in the event of overheating and reactivates the heater when temperature returns to normal.
- Fan delay control
- Optional alarm (240V) to alert automatic thermal limit tripped. Model AFL240
- ETL Listed - Control number 9900268
- Built-in, heavy duty, contactor/relay
- Control Box gasketed to keep out moisture and dust. NEMA 12 construction
- Fan motor is totally enclosed, permanently lubricated and thermally protected
- Great air throw
- Single Point field wiring connection

C ETL LISTED US

Control 9900268

Compact

- Axial fan design allows for smaller unit size
- Dimensions: 12"H X 14"W X 14"L • Weight: 26 lbs.
- Standard hanging bracket supplied
- Can also be installed with threaded rod

Agency Approvals

Model CHPR25 is design certified by ETL to comply with Standard for Heating and Cooling Equipment ANSI/UL 1995 and CAN/CSA No. 236-05, third edition. Meets stringent City of Chicago codes for plenum use.

Zero clearance capable

Model CHPR25 is rated for zero clearance to any surface mounted next to the sides, top, and bottom of the metal cabinet. The rear (entry air) and front (exit air) must have the proper clearances stated in the installation manual.

Effective

- Output: 2500 Watts
- Voltage: 240 1 Phase
- BTUH: 8530 Amps:10.7
- Temp Range: 40°F to 90°F with Positive OFF

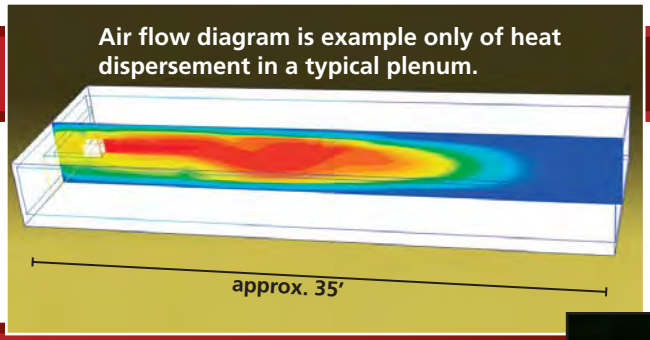

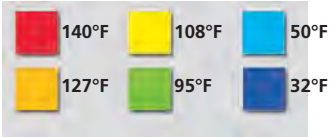

Versatile

This unit is designed for light commercial and residential use and costs less to operate than larger plenum heaters. It may be installed inside a plenum, plenum space, concealed space between a finished ceiling and drop ceiling or in any open space above a ceiling or below a floor that is used as an air plenum. Perfect for parking garage ceilings, industrial space heating, or crawl spaces.

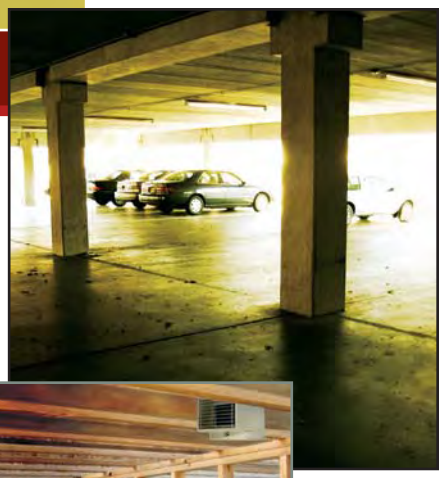

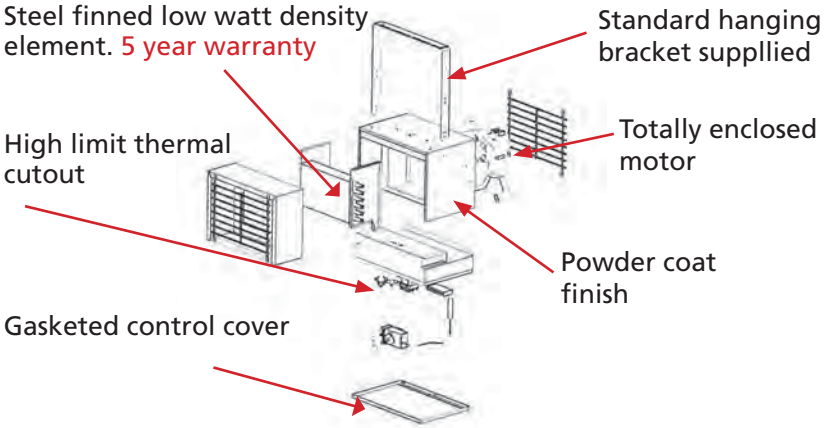

CHPR25 Specifications - Ratings @ 0.2" S.P.

VOLTS	HZ	KW	PHASE	BTUH	CFM	FPM	RISE	AMPS
240	50/60	2.5	1	8530	150	1880	60°F	10.7
208	50/60	1.9	1	6398	130	1880	46°F	9.42

(Thermostat temperature range: 40°F to 90°F with positive off)

0707

QMARK®
A Marley Engineered Products Brand

Bennettsville, SC 29512
For more info visit www.qmarkmep.com

ZBR-QCHPR

QMARK®
A Marley Engineered Products Brand

TYPE AWH
ARCHITECTURAL HEAVY DUTY WALL HEATERS (FAN-FORCED)

APPLICATIONS

QMark's high-capacity, heavy-duty fan-forced wall heaters are designed for use almost anywhere in commercial or industrial areas requiring high capacity and quick recovery. They perform exceptionally well in such applications as motels, entryways, stores, public rest rooms, warehouses and other large, hard to heat areas.

FEATURES

- 1500, 2000, 3000, 4000, and 4800 watts; 120, 208, 240, 277 volts; 60 hz.
- Steel finned metal sheath electric heating elements with low sheath temperatures provide uniform heat and long service life.
- Closely spaced grille bars discourage insertion of foreign objects and direct air downward to effectively distribute heat…keep floors warm and dry.
- Integral thermostat for quick installation… separate thermostat not necessary. (Range: 40° - 90°F.) AWH has tamper resistant thermostat adjustable with a narrow blade screwdriver through the bar grille.
- Thermal overheat protector disconnects power in case of overheating due to accidental blockage.
- Built-in power disconnect switch for added safety during maintenance.
- Built-in fan delay switch energizes fan motor only after elements are heated…prevents discharge of unheated air. When heat shuts off, de-energizes fan motor after residual heat has been dissipated.
- Can be wired with standard 90°C wire.
- Permanently lubricated totally enclosed fan motor provides long life and low maintenance; gently distributes warmth throughout room area. 100 CFM.
- Contemporary steel bar grille with baked enamel finish and satin finished aluminum frame…retains attractive appearance through years of use.*
- Optional accessory power control relays (24 or 120V holding coil) or pneumatic electric (P/E) switch.
- Recess or surface mount in standard 2" x 4" stud walls.

**Northern White color is optional. (Add NW suffix to cat. #)*

MOUNTING LIMITATIONS

1. For wall mounting - Do not install back box closer than 8 inches from floor or adjacent wall.
2. Do not install heater behind towel rack, behind door, in floor, in closet, in ceiling or where air flow may be obstructed.

All controls are concealed behind the front cover making them essentially tamper proof. They will accommodate pneumatic/electric or low-voltage controls commonly used with computerized energy management systems.

c UL us
File #E21609

SILVER MEDAL 5 YEAR WARRANTY

ACCESSORIES

CATALOG NO.	DESCRIPTION
AWH-PE	Pneumatic/Electric switch. Factory set at 10 psig to "make" on pressure drop. May be field wired to "break" on pressure drop. Pressure set point adjustable to 30 psig. (Field installed.)
AWH-R2 (24 volt) AWH-R12 (120 volt)	Time delay relay 40-60 seconds to close when energized. Use 120V or 24V power supply from remote source. (Field installed.)
AWH-S-1	1" deep surface mounting frame for semi-recessed installation.
AWH-S-2	Same as above except 2" deep.
AWH-SM	Surface mounting frame for surface installations. Painted to match heater decor, 3 13/16" deep.
LFK-SFC	14 Gauge security front cover.

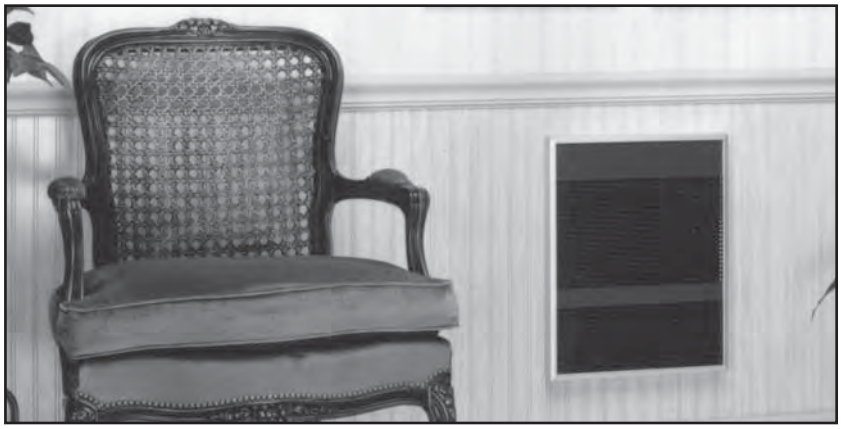

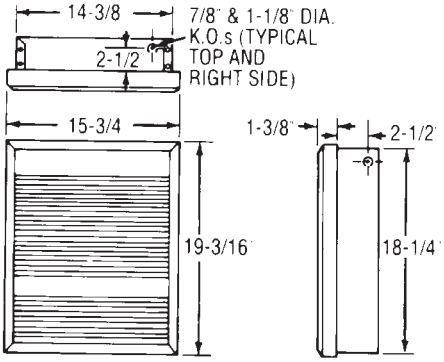

SELECTION CHART

CATALOG NO.	VOLTS	PH.	AMPS	WATTS	BTU/HR	WIRE SIZE
AWH3150	120	1	12.5	1500	5120	12 AWG
AWH3180	120	1	15	1800	6142	12 AWG
AWH4408*	208	1	19.2	4000	13650	10 AWG
			9.6	2000	6825	
AWH4404*	240	1	16.7	4000	13650	10 AWG
			8.3	2000	6825	& 12 AWG
	208	1	14.4	3000	10235	
			7.2	1500	5120	
AWH4407*	277	1	14.4	4000	13650	12 AWG
			7.22	2000	6825	
	240	1	12.5	3000	10235	
			6.3	1500	5120	
AWH4307*	277	1	10.8	3000	10235	12 AWG
			5.4	1500	5120	
AWH4303	347	1	8.6	3000	10235	14 AWG
AWH4508	208	1	23.1	4800	16380	10 AWG
AWH4504	240	1	20	4800	16380	10 AWG
	208	1	17.3	3600	12285	
AWH4507	277	1	17.3	4800	16380	10 AWG
	240	1	15	3600	12285	
AWH4503	347	1	13.8	4800	16380	12 AWG
AWH4506	600	3	4.6	4800	16380	14 AWG
AWH44083	208	3	11.1	4000	13650	14 AWG
AWH45083	208	3	13.3	4800	16380	12 AWG
AWH44043	240	3	9.6	4000	13650	14 AWG
AWH45043	240	3	11.6	4800	16380	14 AWG
AWH4306	600	3	3.0	3000	10235	14 AWG

*Heaters shipped at higher wattage. Units can be converted to half-wattage in field.

Technical Product Specifications

Dryer Vent - 4” Supurr-Vent® Louvered Vent Hood, with aluminum pipe and collar

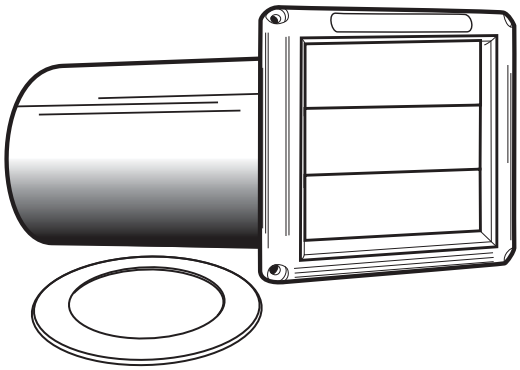

SVHCW4, SVHCB4, SVHAW4, SVHAW4/18, SVHAB4, SVHXW4, SVHUW4, SVHUB4

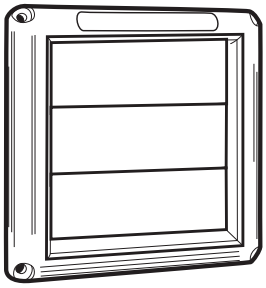

HS4W, HS4B, HSR4W, HSR4W/18, HSR4B, HSR4B/18

Model No.	Description	Color
HS4W	Hood only	White
HS4B	Hood only	Brown
HSR4W	Hood only	White
HSR4W/18	Hood only	White
HSR4B	Hood only	Brown
HSR4B/18	Hood only	Brown
SVHCW4	Hood/pipe unassem.	White
SVHCB4	Hood/pipe unassem.	Brown
SVHXW4	Hood/pipe assem.	White
SVHAW4	Hood/pipe assem.	White
SVHAB4	Hood/pipe assem.	Brown
SVHUW4	Hood/pipe unassem.	White
SVHUB4	Hood/pipe unassem.	Brown

Performance Data

for plastic molded vent hoods

Hood
- Calcium filled Polypropylene
- Melting point: 325° F+
- UV Inhibitor added

Pipe
- Aluminum

Collar
- High impact styrene

General Information

- 4" dia. opening
- quick, easy installation
- louvered construction helps prevent wind and rain from entering vent
- opens with ease for maximun airflow
- durable weather resistant
- curved louvers for quieter operation

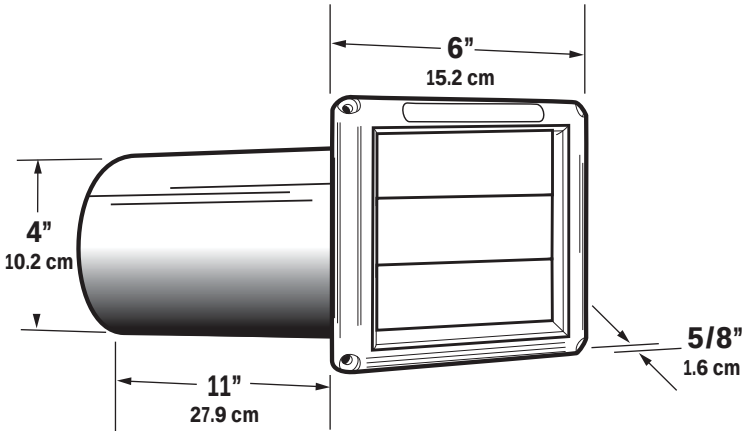

Hood Dia.	CFM	Tested	p/d in/w.c.
4" (10.2 cm)	50	√	.045
4" (10.2 cm)	75	√	.056
4" (10.2 cm)	100	√	.052
4" (10.2 cm)	125	√	.043
4" (10.2 cm)	150	√	.042
4" (10.2 cm)	175	√	.04
4" (10.2 cm)	200	√	.032

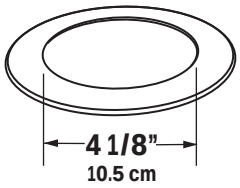

Plastic collar

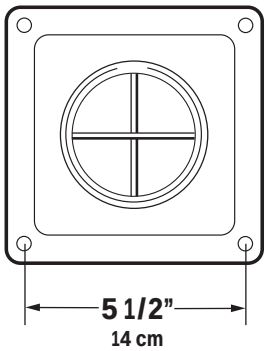

Rear View

Molded for easy connection of pipe

Side View

©2010
DEFLECTO CORPORATION • P.O. Box 50057 • Indianapolis, IN 46250 • www.deflecto.com
DEFLECTO/Canada Ltd. • St. Catharines, Ontario • Canada L2M 3Y2

Deflecto's policy is one of continual product improvement in design and manufacturing wherever possible, therefore all specifications and designs are subject to change without notice and without incurring obligations.

Technical Product Specifications

Supurr-Vent® Louvered Vent Hood without grid - 5", 6" & 7" diameter

Model No.	Description	Color
HS5W	Hood	White
HS5B	Hood	Brown
HS6W	Hood	White
HS6B	Hood	Brown
HS7W	Hood	White

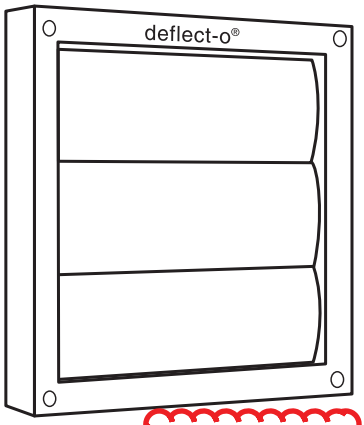

HS5W, HS5B, HS6W, HS6B

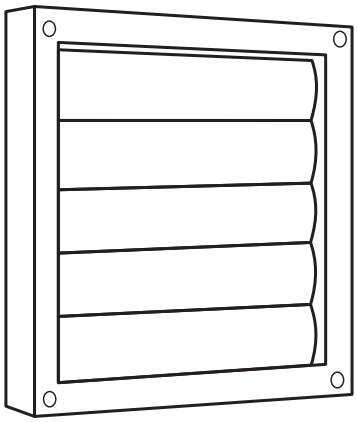

HS7W

Performance Data

for all plastic molded louvered vent hoods

Hood

- Calcium filled Polypropylene
- Melting point: 325° F+
- UV Inhibitor added

Technical Data

- **Free Air**
  5" dia. = 22.5 square inches
  6" dia. = 27 square inches
  7" dia. = 31.5 square inches

General Information

- 5", 6" & 7" diameter opening
- quick, easy installation
- is very attractive and comes in a variety of sizes and two colors
- opens with ease for maximun airflow
- durable weather resistant
- curved louvers for quieter operation

Model No.	A	B	C
HS5W	7 7/8"	7 1/2"	5"
HS5B	7 7/8"	7 1/2"	5"
HS6W	7 7/8"	7 1/2"	6"
HS6B	7 7/8"	7 1/2"	6"
HS7W	9 1/16"	8 1/2"	7"

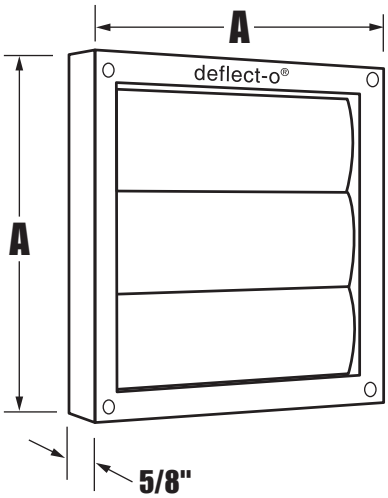

Molded for easy connection of pipe

Side View

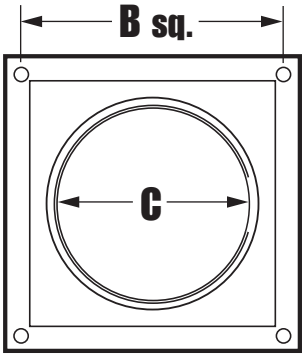

Rear View

6/01

© 2001

DEFLECTO CORPORATION • P.O. Box 50057 • Indianapolis, IN 46250 • www.deflecto.com
DEFLECTO/Canada Ltd. • St. Catharines, Ontario • Canada L2M 3Y2

Deflecto's policy is one of continual product improvement in design and manufacturing wherever possible, therefore all specifications and designs are subject to change without notice and without incurring obligations.

www.advp-deflecto.com

Technical Product Specifications

Fresh Air Intake with Molded Plastic Grid and Fixed Louvers

- 4" (10.2cm), 5" (12.7cm), 6" (15.2cm) Louvered Vent Hood only
- 4" (10.2cm) Louvered Vent Hood with Pipe and Collar

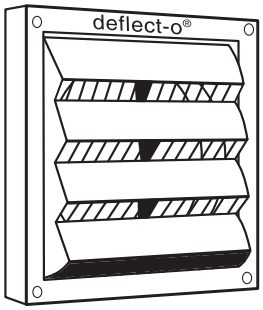

HSM4W, HSM4B

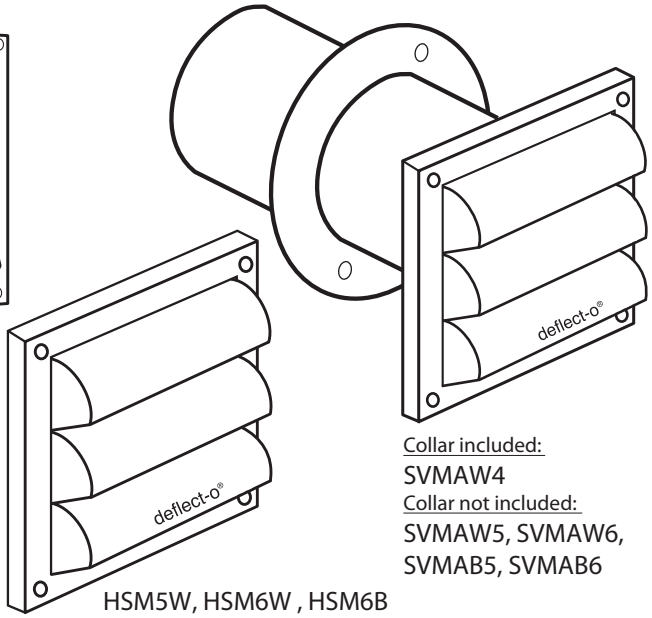

Collar included:
SVMAW4
Collar not included:
SVMAW5, SVMAW6, SVMAB5, SVMAB6

HSM5W, HSM6W , HSM6B

Model No.	Description	Color
HSM4W	Hood w/fixed louvers	White
HSM4B	Hood w/fixed louvers	Brown
SVMAW4	Hood/pipe/collar assem.	White
SVMAW5	Hood/pipe assem.	White
SVMAW6	Hood/pipe assem.	White
SVMAB5	Hood/pipe assem.	Brown
SVMAB6	Hood/pipe assem.	Brown
HSM5W	Hood w/fixed louvers	White
HSM6W	Hood w/fixed louvers	White
HSM6B	Hood w/fixed louvers	Brown

Performance Data

for all plastic molded fresh air intake vents

Hood

- Calcium filled Polypropylene
- Melting point: 325° F+
- UV Inhibitor added

Pipe

- Aluminum

Collar

- Styrene

Technical Data

- Free Air
  4" (10.2cm) dia. = 12 sq.in (77 sq.cm)
  5", 6" dia. = 20 & 28 sq.in (129 sq.cm)
- Protective Grid Size
  4"(10.2cm) dia. = protective grid on each stationary louver
  5", 6" dia. = protective grid on back - 1/2" (12.7cm)sq. openings

General Information

- Stationary molded plastic louvers
- quick, easy installation
- plastic furnace fresh air intakes come with a molded screen to help prevent birds and rodents from entering
- durable weather resistant

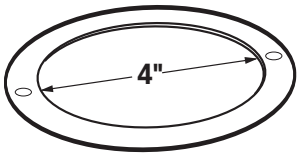

Plastic collar
(SVMAW4 only)

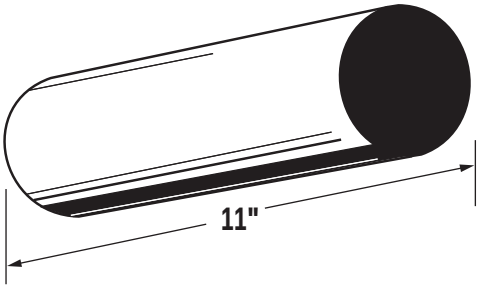

Model No.	A	B	C
HSM4W	6"	5½"	4"
HSM4B	6"	5½"	4"
SVMAW4	6"	5½"	4"
HSM5W	8"	7½"	5"
HSM6W	8"	7½"	6"
HSM6B	8"	7½"	6"
SVMAW5	8"	7½"	5"
SVMAB5	8"	7½"	5"
SVMAW6	8"	7½"	6"
SVMAB6	8"	7½"	6"

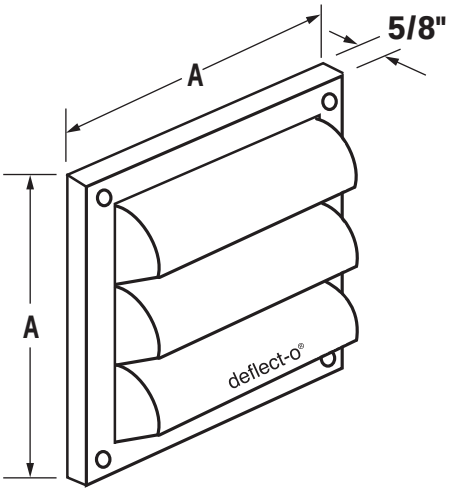

Molded for easy connection of pipe

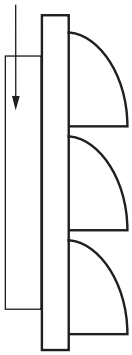

Side View

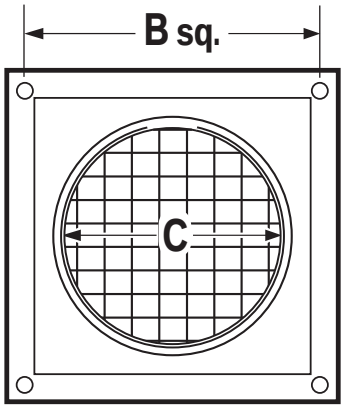

Rear View

4/09
© 2009
DEFLECTO/Canada Ltd. • St. Catharines, Ontario • Canada L2M 3Y2 • www.advp-deflecto.com
DEFLECTO CORPORATION • P.O. Box 50057 • Indianapolis, IN 46250 • www.deflecto.com
Deflecto's policy is one of continual product improvement in design and manufacturing wherever possible, therefore all specifications and designs are subject to change without notice and without incurring obligations.

Heating & Air Conditioning
Amana®

VTC / VTH

Vertical Terminal Air Conditioner and Heat Pump

Cooling: 8,900 - 23,100 BTU/h
Heat Pump: 8,500 - 22,400 BTU/h
Electric Heat: 5,100 - 34,100 BTU/h
Up to 3.0 COP

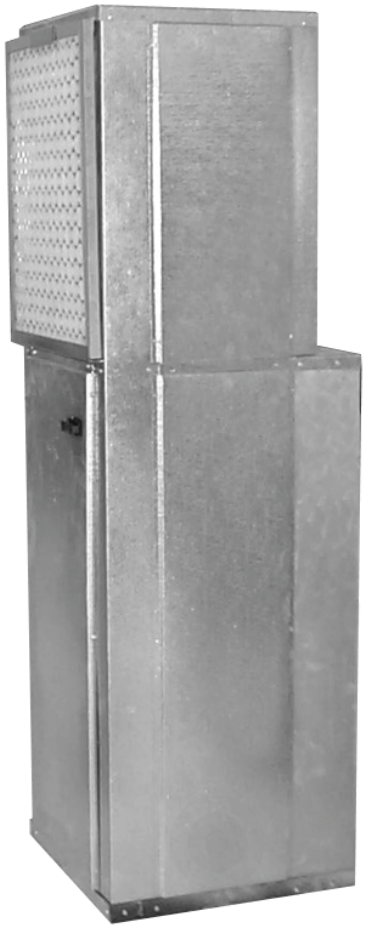

Product Features

- Chlorine-free R-410A refrigerant
- Evaporator coil freeze protection
- Compressor restart delay
- Low-ambient lock-out
- Adjustable fresh air damper
- Wall-mount thermostat
- Electrical disconnect
- Random unit restart
- Front desk control
- Fan on/off delay
- Adjustable fresh air damper
- Completed insulated cabinet for quiet operation
- "Ductable" to multiple rooms
- Full-length wall panels available (eliminates closet door)

¾ Ton through 2 Tons

5 YEAR COMPRESSOR LIMITED WARRANTY* | 1 YEAR PARTS LIMITED WARRANTY* | R-410A REFRIGERANT

* Complete warranty details available from your local dealer or at www.amana-ptac.com.

Amana® is a trademark of Maytag Corporation or its related companies and used under license to Goodman Company, L.P., Houston, Texas.
Supersedes 5/08

FEATURES

- **FRONT DESK CONTROL**
  Enable or disable each unit from the front desk to save energy used to condition unoccupied rooms.
- **FAN DELAY**
  Allows the evaporator blower to continue running for up to 45 sec. after the thermostat is satisfied, maximizing cooling performance.
- **RANDOM RESTART**
  Protects against damage to electrical circuits by preventing all units from starting at one time after power disruption. Random restart occurs in 3 to 4 min.
- **EVAPORATOR COIL FREEZE PROTECTION**
  Prevents ice build-up on coils and compressor damage during the cooling mode. Attached to the coil, a temperature sensor will de-energize the compressor when freezing conditions are detected and re-energize the compressor when the coil warms up again.
- **DUCTABLE RETURN AIR**
  Permits the connection of return air ductwork using the provided tabs (usually not required) on the inlet of the evaporator coil. (Figure 5, pg. 9)
  Note: Duct systems and registered sizes must be properly designed for the CFM and external static pressure rating of the unit.
- **ADJUSTABLE OUTSIDE AIR (MANUAL)**
  Meets code requirements for outside air introduction. The air vent (Figure 6, pg. 9) allows up to 50 CFM of outside air to be introduced into the equipment closet. The air mixes with return air entering the closet through the return air grille.
  Note: Negative pressure can be introduced through an external source to raise the 50 CFM level. Consult with the factory.
- **COMPRESSOR RESTART DELAY – (3 MIN.)**
  Ensures that system pressure equalizes before the system restarts, so compressor life is extended.
- **LOW AMBIENT LOCKOUT**
  Locks out compressor at 40ºF and below, thus extending compressor life.
- **ELECTRICAL DISCONNECT**
  Makes service and maintenance easier. (Factory-installed)
- **FILTER BRACKETS**
  Installed over evaporator coil and shipped with throw-away filter (20” x 24” x 1”; see Figure 5, pg. 9). (Field-installed)
- **UNIQUE “SLEEVE DRAIN” CONDENSATE SYSTEM**
  (Factory-installed) – Connects evaporator drain pan to a vertical pipe connection in the unit’s base pan via a drain line. Evaporator condensate is delivered from the unit to a catch tray in the wall sleeve and exits the sleeve through the ¾” male NPT fitting to allow complete piping of the drain to a condensate riser during the rough-in stage. This eliminates condensate connection problems when connecting the HVAC drain to the riser after the HVAC unit is installed in the closet. Unit can be removed for service without disconnecting the condensate piping. Additional closet space is not needed to connect the drain.
- **SECONDARY OVERFLOW**
  Should the primary condensate riser become clogged, water will fill the catch tray and be diverted through the sleeve to the exterior of the building, ensuring no leakage into the interior area. Rain water entering the sleeve is automatically diverted to the building exterior.

NOMENCLATURE

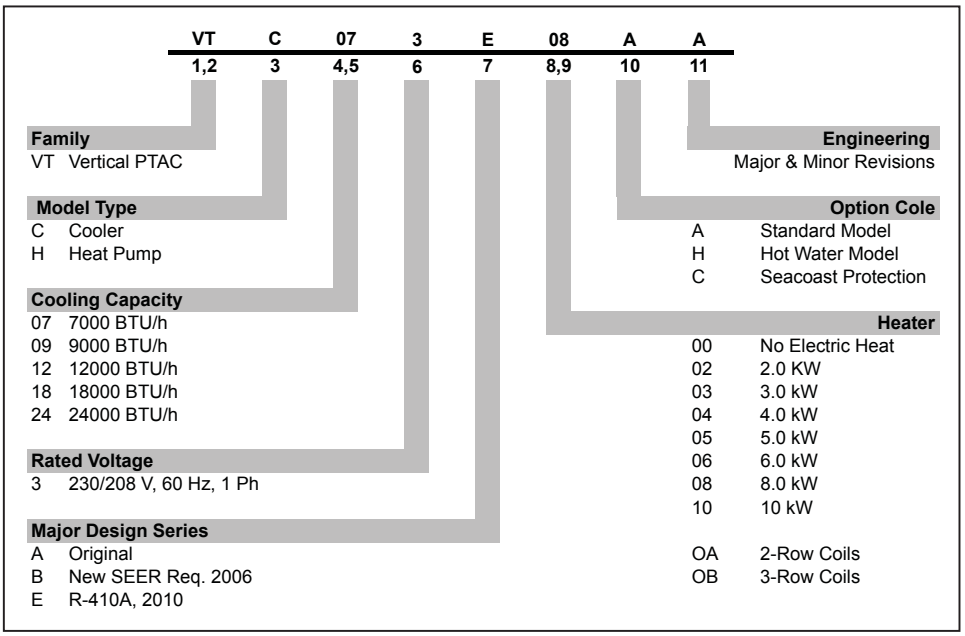

VTC MODEL SPECIFICATIONS—COOLING/ELECTRIC HEAT

ELECTRICAL DATA (208/240V-1 PH-60HZ)

Model	Electric Heat Data						Blower Data		Condenser Data				Min. Circuit Amps		Max. Circuit Protection		Ship Weight (lbs.)
	kW		BTU/h		Heating Amps		Evaporator Motor		Compressor		Condenser Motor						
	240V	208V	240V	208V	240V	208V	Amps	HP	RLA	LRA	FLA	HP	208V	230V	208V	230V	
VTC093E-0	0	0	0	0	0	0							7	7	15	15	
VTC093E-2	2	1.5	6,800	5,100	9	7.9	0.7	⅛	4.5	25.0	0.5	1/15	10	12	15	15	245
VTC093E-3	3	2.3	10,200	7,700	13.2	11.5							15	17	15	20	
VTC093E-4	4	3	13,600	10,200	17.4	15.1							19	22	20	25	
VTC123E-0	0	0	0	0	0	0							9	9	15	15	
VTC123E-2	2	1.5	6,800	5,100	9	7.9							10	12	15	15	
VTC123E-3	3	2.3	10,200	7,700	13.2	11.5	0.7	⅛	5.6	29.0	0.5	1/15	15	17	15	20	245
VTC123E-4	4	3	13,600	10,200	17.4	15.1							19	23	20	25	
VTC123E-5	5	3.8	17,000	12,800	22	19							24	28	25	30	
VTC183E-0	0	0	0	0	0	0							13	13	20	20	
VTC183E-2	2	1.5	6,800	5,100	9.2	8.1							13	13	20	20	
VTC183E-3	3	2.3	10,200	7,700	13.4	11.7							15	17	20	20	
VTC183E-4	4	3	13,600	10,200	17.5	15.3							20	22	25	25	
VTC183E-5	5	3.8	17,000	12,800	22	19	0.9	⅛	6.5	43.0	0.7	1/10	24	28	25	30	255
VTC183E-6	6	4.5	20,500	15,350	26	23							29	33	30	35	
VTC183E-8	8	6	27,300	20,500	34	30							38	43	40	45	
VTC183E-10	10	7.5	34,100	25,600	43	37							47	54	50	60	
VTC243E-0	0	0	0	0	0	0							20	20	30	30	
VTC243E-3	3	2.3	10,200	7,700	14	12.3							20	20	30	30	
VTC243E-4	4	3	13,600	10,200	18.2	15.9							22	24	30	30	
VTC243E-5	5	3.8	17,000	12,800	22	20	2.6	¼	11.5	54.0	2.3	¼	26	29	30	30	255
VTC243E-6	6	4.5	20,500	15,350	27	23							31	35	35	40	
VTC243E-8	8	6	27,300	20,500	35	30							40	45	40	50	
VTC243E-10	10	7.5	34,100	25,600	43	38							49	55	50	60	

COOLING PERFORMANCE DATA

Model	Standard Ratings[1]	
	BTU/h	EER
VTC093E	8,900	9.0
VTC123E	11,500	9.0
VTC183E	17,600	9.0
VTC243E	23,100	9.0

[1] Tested in accordance with ARI Standard 310/380-93 at 95°F DB/75°F WB outdoors and 80°F DB/67°F WB indoors.

VTC MODEL SPECIFICATIONS—COOLING/ELECTRIC HEAT (CONT.)

BLOWER DATA

MODEL	MOTOR SPEED[1] CONNECTION	CFM VS. EXTERNAL STATIC PRESSURE							
		0.05	0.10	0.15	0.20	0.25	0.30	0.35	0.40
VTC093E	High	490	475	460	450	435	420	400	---
	Med	375	360	350	340	330	315	300	---
	Low	290	280	270	260	240	230	215	---
VTC123E	High	490	475	460	450	435	420	400	---
	Med	375	360	350	340	330	315	300	---
	Low	290	280	270	260	240	230	215	---
VTC183E	High	660	655	650	645	640	635	625	610
	Med	580	578	575	570	565	560	550	540
	Low	485	480	475	470	465	460	455	450
VTC243E	High	1,030	1,000	980	950	920	890	860	820
	Med	880	860	840	820	790	760	730	710
	Low	770	760	750	740	720	700	680	660

Notes:

(1) VTC12, 18- and 24-blower motors are factory-wired for medium (cooling) and low (heating) fan operation. VTC09 is low speed for both.

(2) VTH12, 18- and 24-blower motors are factory-wired for medium (cooling/heat pump) and low (electric heat) speed operation. VTH09 is low speed in all modes.

DIMENSIONAL DATA

*See Wall Sleeve Installation Instructions for complete details.

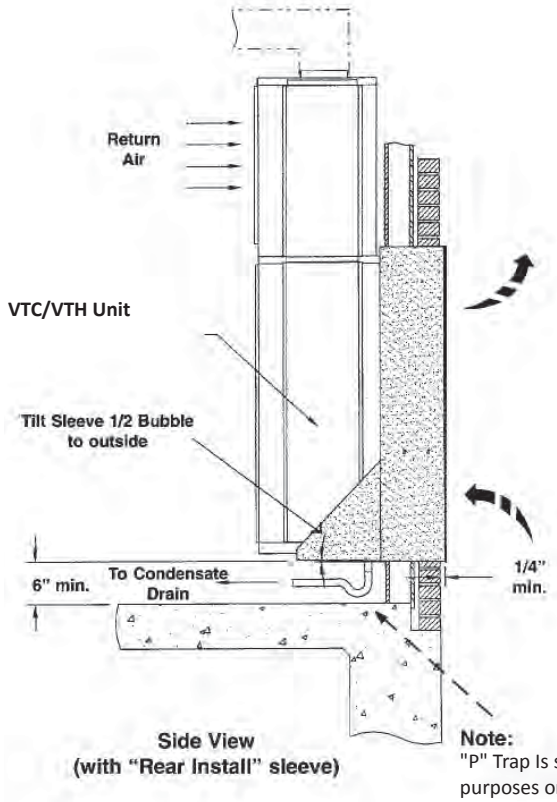

Note:
"P" Trap Is shown for illustration purposes only. It may not be required by local codes.

VTH MODEL SPECIFICATIONS—COOLING/ELECTRIC HEAT

ELECTRICAL DATA (208/240V-1 PH-60HZ)

Model	Electric Heat Data						Elower Data		Condenser Data				Min. Circuit Amps		Max. Circuit Protection		Ship Wgt (lEs)
	kW		ETU/H		Heating Amps		Evaporator Motor		Compressor		Motor						
	240V	208V	240V	208V	240V	208V	Amps	HP	RLA	LRA	FLA	HP	208V	230V	208V	230V	
VTH093E	2	1.5	6800	5,100	9	7.9							10	12	15	15	
	3	2.3	10,200	7,700	13.2	11.5	0.7	⅛	4.5	25	0.5	1/15	15	17	15	20	245
	4	3	13,600	10,200	17.4	15.1							19	22	20	25	
VTH123E	2	1.5	6800	5,100	9	7.9							10	12	15	15	
	3	2.3	10,200	7,700	13.2	11.5	0.7	⅛	5.6	29	0.5	1/15	15	17	15	20	245
	4	3	13,600	10,200	17.4	15.1							19	23	20	25	
	5	3.8	17,000	12,800	22	19							24	28	25	30	
VTH183E	2	1.5	6,800	5,100	9.2	8.1							13	13	20	20	
	3	2.3	10,200	7,700	13.4	11.7							15	17	20	20	
	4	3	13,600	10,200	17.5	15.3							20	22	25	25	
	5	3.8	17,000	12,800	22	19	0.9	⅛	6.5	43	0.7	1/10	24	28	25	30	255
	6	4.5	20,500	15,350	26	23							29	33	30	35	
	8	6	27,300	20,500	34	30							38	43	40	45	
	10	7.5	34,100	25,600	43	37							47	54	50	60	
VTH243E	3	2.3	10,200	7,700	14	12.3							20	20	30	30	
	4	3	13,600	10,200	18.2	15.9							22	24	30	30	
	5	3.8	17,000	12,800	22	20	2.6	¼	11.5	54	2.3	¼	26	29	30	30	255
	6	4.5	20,500	15,350	27	23							31	35	35	40	
	8	6	27,300	20,500	35	30							40	45	40	50	
	10	7.5	34,100	25,600	43	38							49	55	50	60	

IMPORTANT:

- Heat pump does not operate simultaneously with electric heat.
- Electrical data in the aEove taEle only applies to units manufactured after 8/1/2000 (data code G08). Contact factory for electrical data for units manufactured prior to 8/1/2000.
- Compressors in these models (after 8/1/2000) do not operate simultaneously with heater elements.
- Models manufactured Eefore 8/1/2000 (excluding the VTH24-HP) did feature simultaneous operation and therefore had higher circuit ampacities.

PERFORMANCE DATA

Model	Cooling Data		Heating Data[2]		
	BTU/H	EER	BTU/H	WATTS	COP
VTH093E	8,900	9.0	8,500	795	3.0
VTH123E	11,400	9.0	11,500	1,001	3.0
VTH183E	17,400	9.0	16,700	1,582	3.0
VTH243E	22,600	9.0	22,400	1,967	3.0

[1] Tested in accordance with ARI Standard 310/380-93 at 95°F DB/75°F WB outdoors and 80°F DB/67°F WB indoors.

[2] 47°F DB, 43°F WB Outdoor/70°F DB, 60°F WB Indoor

DIMENSIONAL DATA

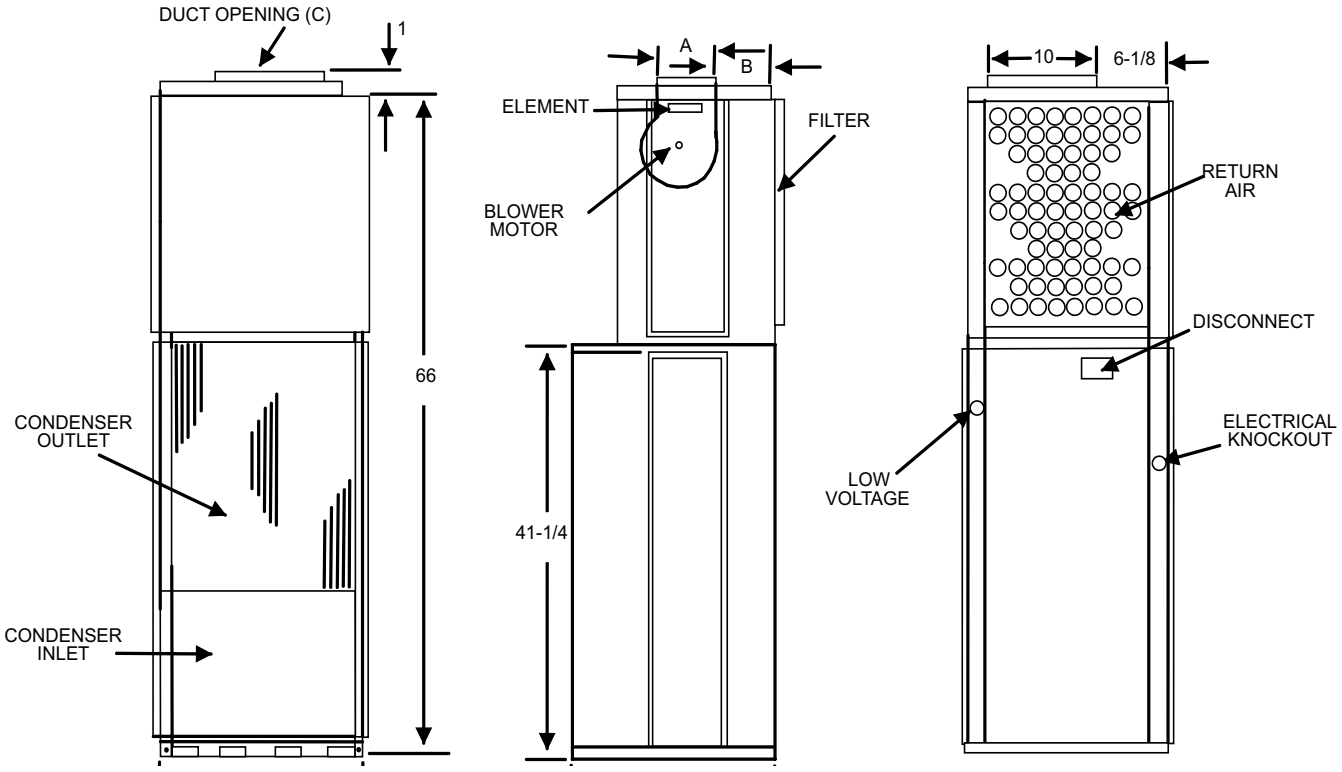

	A	B
VTC/VTH 09, 12, 18	6½	6½
VTC/VTH 24	10	3

ACCESSORIES

- **WALL-MOUNTED LOW-VOLTAGE THERMOSTAT**
  Easily controls the unit. Low-voltage wires exit the left side of the cabinet. (See Pg. 8.)
- **"FLUSH STYLE" ARCHITECTURAL LOUVER**
  Attaches to the outside of the wall sleeve for a flush appearance. Louvers recess into the wall sleeve; stock and custom colors available.
- **WALL SLEEVES**
  Standard 22" width x 44" Height. Six sleeves (three rear installation, three side installation) available for varying wall widths, from 5" to 20". (See chart below and Figure 7, page 9.)
  Shipped separately to allow installation during construction, each sleeve includes a factory installed "weather guard" to cover the sleeve opening during construction phase.
  Note: Due to better access to unit, wall sleeves installed in the rear application are recommended over side-installed wall sleeves whenever possible.

Side Wall Sleeves

MODEL	WALL DEPTH	SLEEVE DEPTH
SWS958A	5" - 8" Walls	26"
SWS9812A	8" - 12" Walls	30"
SWS91214A	12" - 15" Walls	33"
	20" Walls	

Note: Side-installed wall sleeves require different closet sizes and configurations. (See Page 10.)

Rear Wall Sleeves

MODEL	WALL DEPTH	SLEEVE DEPTH
VWS95BA	5" - 8" Walls	26"
VWS9812A	8" - 12" Walls	30"
VWS91214A	12" - 15" Walls	33"
	20" Walls	

Architectural Grilles (Available in various colors)

MODEL	WALL DEPTH
AGKV01CB	Anodized Cluminum (Clear)
AGKV01DB	Dark Broze
AGKV01TB	Stonewood
AGKV01WB	White
AGKV015B	Custom Color

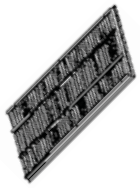

UNIT WITH INSTALLED REAR SLEEVE AND FLUSH-STYLE LOUVER

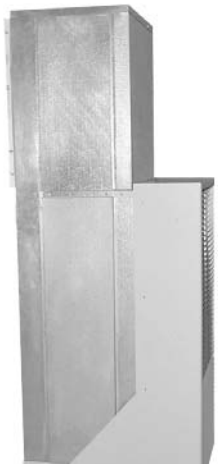

Note: Sleeve, louver, filter, and thermostat required for each general installation.

Separate wall mounting bracket is shipped with "side install" wall sleeves.

Side Install Sleeve

ACCESSORIES (CONT.)

- **WALL-MOUNTED LOW-VOLTAGE THERMOSTAT***

  Easily controls the unit. Low-voltage wires exit the left side of the cabinet.

  * Available for straight cool/hydronic chassis and heat pump chassis.

- **UNIT MOUNTED FREEZE SENSOR (UMF01A)**

  De-energizes the unit when reduced air flow or ice build-up are detected. Re-energizes the unit when normal operating conditions resume.

- **HYDRONIC FLOW CONTROL MODULE (HFC01A)***

  Regulates the amount of hot water heat to the unit. *Applies to hydronic models only.

1246001	Straight Cool/ Hydronic Chassis	Digital cool - off - heat, auto - on
1246003	Heat Pump Chassis	Digital cool - off - heat, auto - on

- **OPTIMAL ACCESS/RETURN AIR PANEL**

  Panels are available as louvered or non-louvered and are insulated to for sound reduction with tamper-proof screws. Louvered panel includes an 18" x 24" x 1" filter. Non-louvered panels required external return air grilles and unit mount flters.

- **FLOAT SWITCH (FSE306A)***

  Opens the condensate pan automatically when water rises in the pan and shuts off the system by breaking low or line voltage current to the compressor. Switch is normally closed. By clipping the float switch to the side of the auxiliary drain pan, ceiling water damage is prevented. In some areas, this switch can replace an auxiliary drain pan. Local building codes should be checked for application.

  Note: The float switch must be installed before unit is set in the sleeve.
  *Applies to hydronic models only.

Access/Return Air Panel

Access/Return Air Panel[3 4]

PART #	DESCRIPTION	DIMENSIONS (H x W)		SHIP WEIGHT
		FRAME	OPENING	
931-11	Louvered[1]	87 x 31	84 x 28	55
931-12	Non-Louvered[2]	87 x 31	84 x 28	55
931-13	Louvered[1]	82 x 31	79 x 28	55
931-14	Non-Louvered[2]	82 x 31	79 x 28	55

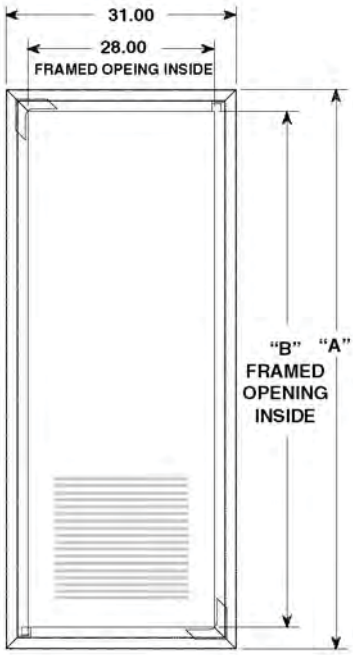

Note: A solid door or panel with a side wall return air grille will result in lower sound levels.

PART #	A	B
N/LWPO187	87	84

ACCESSORIES (CONT.)

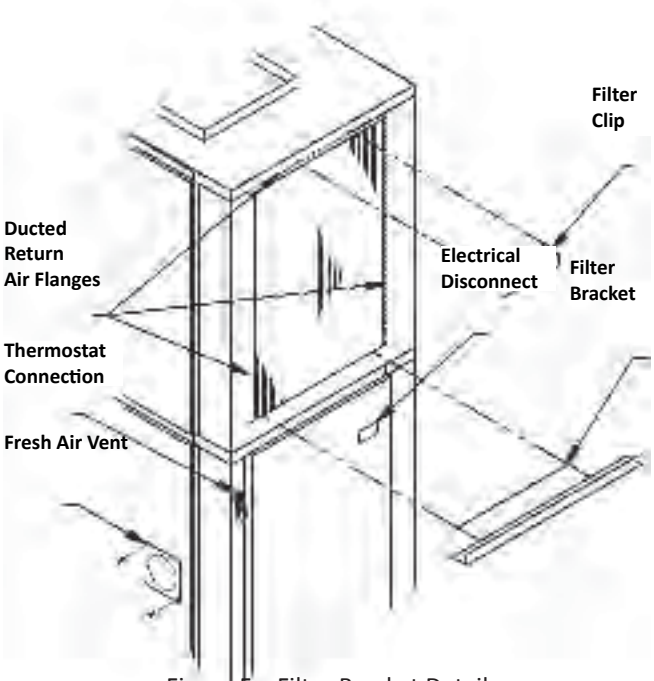

Figure 5—Filter Bracket Detail

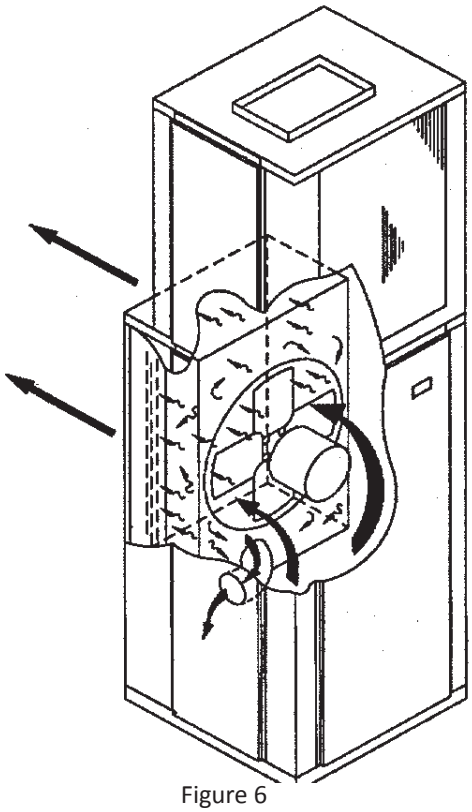

Figure 6

OUTDOOR AIR VENTILATION

One end of a 4” aluminum vent pipe is connected to the condenser venturi and the other end is connected to the side of the VTC/VTH cabinet. A mesh screen is installed inside the vent pipe, and a metal plate on the side of the cabinet covers the opening of the vent pipe. Up to 50 CFM of outside air is introduced into the equipment closet by removing the metal cover plate. The outside air then mixes with the return air and is pulled through the evaporator coil and into the supply duct. The cover plate can be re-installed to partially close the outside air opening if less than 50 CFM is desired. An external source of negative pressure (i.e., a bathroom fan) could be used to introduce more than 50 CFM of outside air. Consult with factory for further details.

Note: It is suggested that a minimum 24” door be used for access. Closet interior may be smaller than listed here as long as the door opening allows for removing the unit. Door opening must line up with unit to allow removal.

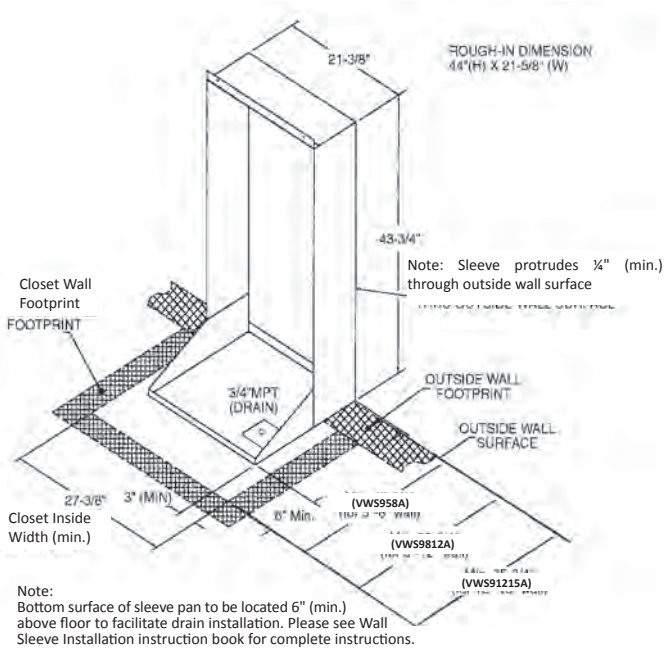

Figure 7

GENERAL ASSEMBLY

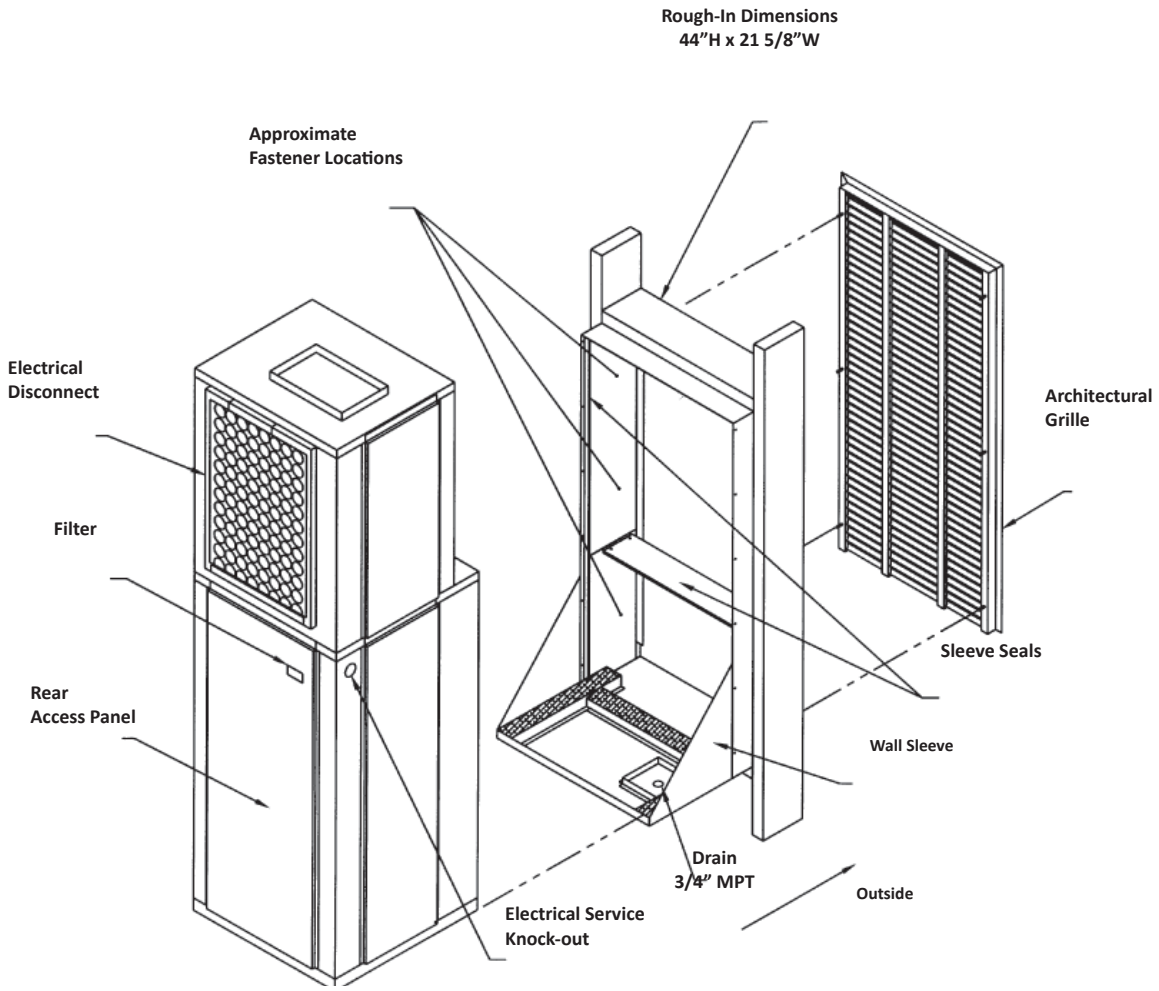

INSTALLATION

REAR INSTALLATION

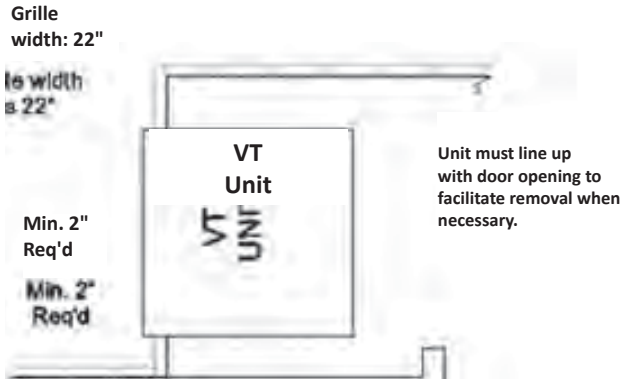

Notes:

1. Sleeve rough-in opening is 44” (H) x 21-5/8” (W)
2. Bottom of opening should be approximately 6” above floor level.
3. Minimum 3” clearance is required on all sides of the unit.

REAR INSTALLATION—CLOSET DIMENSIONS

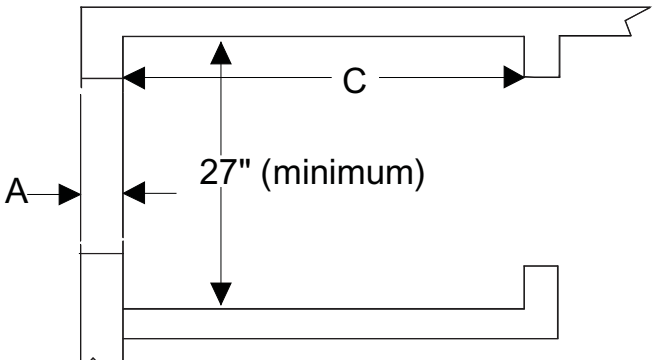

Instructions:

To find the minimum closet depth (dimension “C”), use the following method:

Determine dimension “A” which is the total finished wall thickness.

* For 5”-8” outside wall thickness, subtract “A: from 29” (C” = 29 - “A”)
* For 8”-12” outside wall thickness, subtract “A: from 33” (C” = 33 - “A”)
* For 12”-15” outside wall thickness, subtract “A” from 36” (C” = 36 - “A”)

SIDE INSTALLATION—CLOSET DIMENSIONS

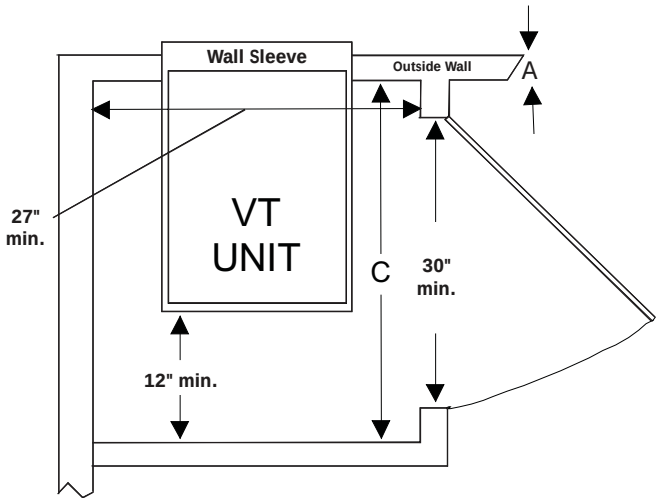

Instructions:

To find the minimum closet depth (dimension “C”), use the following method:

Determine dimension “A”, which is the total finished wall thickness.

* For 5”-8” outside wall thickness, subtract “A: from 39” (C” = 39 - “A”)
* For 8”-12” outside wall thickness, subtract “A: from 43” (C” = 43 - “A”)
* For 12”-15” outside wall thickness, subtract “A” from 46” (C” = 46 - “A”)

GUIDE SPECIFICATIONS

Ratings – Each unit must meet the following specifications:

ARI rating of _____BTU/h cooling (and _____ BTU/h reverse cycle heating with a COP of _____at 47 °F O.D.)

Electric resistance heat of _____ BTU/h. Total Amp draw must be of _____ and _____ Watts at _____ volts.

The EER must be a minimum of _____ EER.

Unit Chassis — Each unit must be slide-out design, ready for installation into closet space. Unit must fit into closet space not to exceed 24” x 24” with overhead duct connections designed to .25 ESP. Unit must be tested for conformance to ASTME water infiltration specification ASTME 331-86, which ensures no water infiltration when tested at 8" rain per hour at 63 mph wind for 15 min.

Filter — Filter provided with the unit. Installer must provide for easy accessibility.

Heat Pumps — Each unit must include a changeover thermostat that senses an outside coil switch-over temperature of 25°F, lock-open refrigerant-reversing valve during heat pump operation, temperature-activated defrost drain and automatic emergency heat operation to over-ride the heat pump’s change-over thermostat and bring on electric resistance heaters in the event of a sealed-system failure.

Compressor — The compressor must be hermetically sealed, internally isolated, rotary-type and permanently mounted on rubber isolators. No removal or adjustment of compressor hold-down bolts is to be required during installation.

Unit Controls — The unit must be controlled by a thermostat. Other unit controls must include a concealed ventilation control to allow the introduction of filtered air into the room, a concealed fan mode switch to allow the owner to preset for either continuous fan or thermostatically cycled fan operation. Additionally, the following controls are to be included as standard on all units:

- Compressor restart delay
- Random restart circuit
- Front desk control
- Evaporator coil freeze protection
- Fan delay
- Low ambient lock-out

Evaporator/Condenser Fans — Direct drive with a permanent split capacitor, two-speed motor. Must have a condenser fan and separate indoor evaporator motor. Condenser fan must be propeller type and evaporator fan must be blower type.

Coils — Unit’s coils must have copper tubing expanded into rippled-edge louvered aluminum fins.

Discharge and Return Air — A unit must be able to discharge air through an overhead duct system with an external static pressure capability of 0.35" for 9,000 and 12,000 unit sizes and 0.40" for 18,000 and 24,000 unit sizes. The return air must be capable of a free return at the unit or a ducted return.

Warranty — Limited One-Year Warranty; Second- through Fifth-Year Limited Replacement Compressor Warranty. Full warranty details are available at www.amana-hac.com.

Wall Sleeve — The wall sleeve must be of industry-accepted dimensions: from 21” [d] to 28” [d] (dependent upon wall width, from 5” to 15”) x 22” [w] x 44” [h] and constructed of insulated galvanized steel for corrosion resistance. Sleeve must be shipped with weather-resistant rear closure panel installed.

Condensate Drain — The unit must have a condensate draining system. A vertical pipe connection in the base pan is connected to the evaporator drain pan via a drain line. Condensate passes from the unit to a catch tray, located in the wall sleeve, and exits the sleeve through a ¾” male NPT fitting. (This allows piping to be done during construction stage).

The unit must also have a secondary condensate draining system for overflow. If the primary condensate draining system becomes clogged, water will be directed from the catch tray, through the sleeve, to the outside of the building. Any external water source (rain, sleet, etc.) entering the sleeve will also be diverted to the building’s exterior.

Outdoor Grilles — Must be architecturally extruded and made of anodized aluminum (AGKV***A). All other grilles must be submitted to our company for feasibility, airflow characteristics and compliance with U.L. regulations, where necessary.

Hydronic Heat Units — Required for heating functions instead of electric resistance heaters. Unit must retain complete service access with the kit installed. Proper water or steam valves must be used; however, they are not included with the Hydronic Heat Unit.

Thermostats — A manual, auto-changeover or programmable thermostat must be installed to provide full remote operation of the chassis.

Amana® is a trademark of Maytag Corporation or its related companies and used under license to Goodman Company, L.P. All rights reserved. Our continuing commitment to quality products may mean a change in specifications without notice. © 2010 • Goodman Company, L.P. • Houston, Texas • Printed in the USA.

CA13NA 018–060
Base™ Series Air Conditioner with Puron® Refrigerant

turn to the experts

Product Data

Carrier's CA13 has been designed utilizing Carrier's Puron refrigerant. The environmentally sound refrigerant allows you to make a responsible decision in the protection of the earth's ozone layer.

This product has been designed and manufactured to meet Energy Star® criteria for energy efficiency when matched with appropriate coil components. Refer to the combination ratings in the Product Data for system combinations that meet Energy Star® guidelines.

INDUSTRY LEADING FEATURES / BENEFITS

Efficiency

- Up to 15 SEER/12.5 EER
- Microtube Technology™ refrigeration system
- Energy Star® combinations

Reliability

- Puron® refrigerant – environmentally sound, won't deplete the ozone layer and low lifetime servce cost.
- Scroll compressor
- Internal pressure relief valve
- Internal thermal overload
- Filter drier

Durability

WeatherArmor™ protection package:

- Solid, durable sheet metal construction
- Dense wire coil guard

Applications

- Long-line – up to 250 feet (76.20 m) total equivalent length, up to 200 feet (60.96 m) condenser above evaporator, or up to 80 ft. (24.38 m) evaporator above condenser (See Longline Guide for more information.)
- Low ambient (down to –20°F/–28.9°C)) with accessory kit

NOTE: Ratings contained in this document are subject to change at any time. Always refer to the AHRI directory (www.ahridirectory.org) for the most up-to-date ratings information.

PRODUCT NUMBER NOMENCLATURE

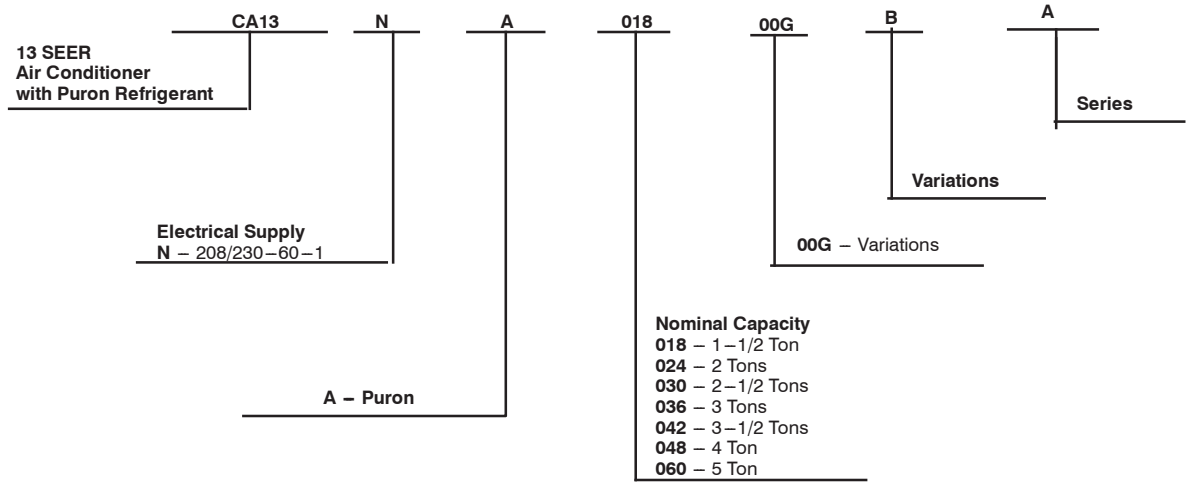

Puron™
the environmentally sound refrigerant

AHRI CERTIFIED™
www.ahridirectory.org

Use of the AHRI Certified TM Mark indicates a manufacturer's participation in the program For verification of certification for individual products, go to www.ahridirectory.org.

c UL US

ASHRAE 90.1 COMPLIANT

ENERGY STAR

This product has been designed and manufactured to meet Energy Star® criteria for energy efficiency when matched with appropriate coil components. However, proper refrigerant charge and proper air flow are critical to achieve rated capacity and efficiency. Installation of this product should follow all manufacturing refrigerant charging and air flow instructions. **Failure to confirm proper charge and air flow may reduce energy efficiency and shorten equipment life.**

A-WEIGHTED SOUND POWER (dBA)

UNIT SIZE – SERIES	Standard Rating (dBA)	TYPICAL OCTAVE BAND SPECTRUM (dBA without tone adjustment)						
		125	250	500	1000	2000	4000	8000
18–A	76	49.5	59.0	63.0	66.5	62.5	58.5	54.0
24–A	76	50.5	61.0	67.0	68.0	65.0	60.0	55.5
30–A	76	52.0	59.5	65.0	65.0	62.0	58.5	50.5
36–A	77	61.5	63.5	68.5	72.0	68.5	63.0	56.5
42–A	80	56.0	64.5	69.5	71.0	66.0	64.0	59.0
48–A	80	57.5	65.5	70.5	72.0	68.5	67.0	61.5
60–A	80	59.5	69.5	72.5	73.5	71.0	68.0	63.5

NOTE: Tested in accordance with AHRI Standard 270–95 (not listed in AHRI).

METERING DEVICE

UNIT SIZE–SERIES	INDOOOR	REQUIRED SUBCOOLING °F (°C)
18–A	TXV*	10(5.6)
24–A		
30–A		
36–A		
42–A		
48–A		
60–A		

* TXV must be ordered separately when indoor coil is not equipped with a TXV. TXV must be hard–shutoff type.

SPECIFICATIONS

UNIT SIZE – SERIES	18–A	24–A	30–A	36 –A	42–A	48–A	60–A
ELECTRICAL							
Unit Volts—Hertz—Phase	208/230—60—1						
Operating Voltage Range*	187—253						
Compressor—Rated Load Amps	9.0	13.5	12.8	14.1	17.9	19.9	26.4
Locked Rotor Amps	48.0	58.3	64.0	77.0	112.0	109.0	134.0
Condenser Fan Motor— Full Load Amps	0.5	0.8	0.8	1.4	1.1	1.4	1.4
Min Unit Ampacity for Wire Sizing	11.7	17.6	16.8	17.6	23.5	26.2	34.4
Min Wire Size (60°/75° Copper) AWG**	14	14	14	12	12	10	8/10
Max Wire Length (60°/75°) ft (m)‡	66 / 62 (20.1 / 18.9)	44 / 42 (13.4 / 12.8)	46 / 44 (14.0 / 13.4)	70 / 66 (21.3 / 20.1)	52 / 50 (15.8 / 15.2)	74 / 70 (22.6 / 21.3)	89 / 54 (27.1 / 16.5)
Max Branch Circuit Fuse Size†	20	30	25	30	40	40	50
COMPRESSOR AND REFRIGERANT							
Type	Scroll						
Temperature and Current Protection	Internal Line Break						
R–410A Refrigerant— Amount Lb (kg) @ 15 ft (4.6 m)	3.15 (1.43)	3.15 (1.43)	3.63 (1.65)	4.67 (2.12)	6.20 (2.82)	7.67 (3.48)	8.00 (3.64)
Refrigerant Tubes (In. OD) ‡‡ Rated Vapor and Maximum Liquid	3/4 and 3/8			7/8 and 3/8		1–1/8 and 3/8	
CONDENSER COIL AND FAN							
Coil Face Area (Sq Ft)	8.4	8.4	9.8	12.60	17.3	21.63	15.14
Fan Motor—HP, Type, and RPM	1/12 PSC and 1100	1/10 PSC and 1100		1/4 PSC and 1100	1/5 PSC and 1100	1/4 PSC and 1100	
Volts—Hertz—Phase	208/230—60—1						
Condenser Airflow (CFM)	1700	2000	2000	2500	3000	3400	3400
OPTIONAL EQUIPMENT							
Cycle Protector	KSACY0101AAA						
Start Assist—PTC Type	KAACS0201PTC				KAACS0201PTC		KAACS0201PTC
Start Assist—Capacitor/Relay Type	KSAHS1501AAA		KSAHS1701 AAA	KSAHS1501AAA			
MotorMaster® Control	KSALA0601AAA						
Ball Bearing Fan Motor (RCD)	HC32GE234	HC34GE239		HC40GR232	HC38GE219	HC40GE226	
Low–Pressure Switch	KAALP0401PUR						
High–Pressure Switch	KAAHI0501PUR						
Compressor Sound Hood	KSASH1801COP				KSASH0601COP		KSASH2101CO P
Time–Delay Relay	KAATD0101TDR						
Low–Ambient Pressure Switch Kit	KSALA0301410						
Winter Start Control	KAAWS0101AAA						
Evaporator Freeze Thermostat	KAAFT0101AAA						
Compressor Crankcase Heater	KAACH1401AAA				KAACH1201AAA		
Liquid Line Solenoid Valve††	KAALS0201LLS						
TXV (Hard Shutoff)††	KSATX0201PUR			KSATX0301PUR		KSATX0401P UR	KSATX0501PUR
Liquid Line Filter Drier	KH43LG073						KH43LG074

N/A – Not applicable in this application.

* Permissible limits of the voltage range at which unit will operate satisfactorily. Operation outside these limits may result in unit failure.

† Time–delay fuse or circuit breaker.

‡ Length shown is as measured 1 way along wire path between unit and service panel for voltage drop not to exceed 2%.

** If wire is applied at ambient greater than 30°C, consult Table 310–16 of the NEC (ANSI/NFPA 70). The ampacity of nonmetallic–sheathed cable (NM), trade name ROMEX, shall be that of 60°C conductors, per the NEC (ANSI/NFPA 70) Article 336–26.

†† Do not use hard shutoff TXV with liquid solenoid valve.

‡‡ Units are rated with 25 ft (7.6 m) of lineset length. See *Vapor Line Sizing and Cooling Capacity Loss* table when using other sizes and lengths of lineset.

REFRIGERANT PIPING LENGTH LIMITATIONS

Liquid Line Sizing and Maximum Total Equivalent Lengths† for Cooling Only Systems with Puron® Refrigerant:

The maximum allowable length of a residential split system depends on the liquid line diameter and vertical separation between indoor and outdoor units.

See Table below for liquid line sizing and maximum lengths :

Maximum Total Equivalent Length
Outdoor Unit BELOW Indoor Unit

Size	Liquid Line Connection	Liquid Line Diam. w/ TXV	AC with Puron Refrigerant Maximum Total Equivalent Length†: Outdoor unit BELOW Indoor Vertical Separation ft (m)								
			0–5 (0–1.5)	6–10 (1.8–3.0)	11–20 (3.4–6.1)	21–A (6.4–9.1)	31–40 (9.4–12.2)	41–50 (12.5–15.2)	51–60 (15.5–18.3)	61–70 (18.6–21.3)	71–80 (21.6–24.4)
018 AC with Puron	3/8	1/4	150	150	125	100	100	75	– –	– –	– –
		5/16	250*	250*	250*	250*	250*	250*	250*	225*	150
		3/8	250*	250*	250*	250*	250*	250*	250*	250*	250*
024 AC with Puron	3/8	1/4	75	75	75	50	50	– –	– –	– –	– –
		5/16	250*	250*	250*	250*	250*	225*	175	125	100
		3/8	250*	250*	250*	250*	250*	250*	250*	250*	250*
030 AC with Puron	3/8	1/4	30	– –	– –	– –	– –	– –	– –	– –	– –
		5/16	175	225*	200	175	125	100	75	– –	– –
		3/8	250*	250*	250*	250*	250*	250*	250*	250*	250*
036 AC with Puron	3/8	5/16	175	150	150	100	100	100	75	– –	– –
		3//8	250*	250*	250*	250*	250*	250*	250*	250*	250*
042 AC with Puron	3/8	5/16	125	100	100	75	75	50	– –	– –	– –
		3/8	250*	250*	250*	250*	250*	250*	250*	250*	150
048 AC with Puron	3/8	3/8	250*	250*	250*	250*	250*	250*	230	160	– –
060 AC with Puron	3/8	3/8	250*	250*	250*	225*	190	150	110	– –	– –

*** Maximum actual length not to exceed 200 ft (61 m)**

† Total equivalent length accounts for losses due to elbows or fitting. See the Long Line Guideline for details.

– – = outside acceptable range

Maximum Total Equivalent Length
Outdoor Unit ABOVE Indoor Unit

Size	Liquid Line Connection	Liquid Line Diam. w/ TXV	AC with Puron Refrigerant Maximum Total Equivalent Length†: Outdoor unit ABOVE Indoor Vertical Separation ft (m)							
			25 (7.6)	26–50 (7.9–15.2)	51–75 (15.5–22.9)	76–100 (23.2–A.5)	101–125 (30.8–38.1)	126–150 (38.4–45.7)	151–175 (46.0–53.3)	176–200 (53.6–61.0)
018 AC with Puron	3/8	1/4	175	250*	250*	250*	250*	250*	250*	250*
		5/16	250*	250*	250*	250*	250*	250*	250*	250*
		3/8	250*	250*	250*	250*	250*	250*	250*	250*
024 AC with Puron	3/8	1/4	100	125	175	200	225*	250*	250*	250*
		5/16	250*	250*	250*	250*	250*	250*	250*	250*
		3/8	250*	250*	250*	250*	250*	250*	250*	250*
030 AC with Puron	3/8	1/4	30	– –	– –	– –	– –	– –	– –	– –
		5/16	250*	250*	250*	250*	250*	250*	250*	250*
		3/8	250*	250*	250*	250*	250*	250*	250*	250*
036 AC with Puron	3/8	5/16	225*	250*	250*	250*	250*	250*	250*	250*
		3/8	250*	250*	250*	250*	250*	250*	250*	250*
042 AC with Puron	3/8	5/16	175	200	250*	250*	250*	250*	250*	250*
		3/8	250*	250*	250*	250*	250*	250*	250*	250*
048 AC with Puron	3/8	3/8	250*	250*	250*	250*	250*	250*	250*	250*
060 AC with Puron	3/8	3/8	250*	250*	250*	250*	250*	250*	250*	250*

*** Maximum actual length not to exceed 200 ft (61 m)**

† Total equivalent length accounts for losses due to elbows or fitting. See the Long Line Guideline for details.

– – = outside acceptable range

CA13NA

REFRIGERANT CHARGE ADJUSTMENTS

Liquid Line Size	Puron Charge oz/ft (g/m)
3/8	0.60 (17.74) (Factory charge for lineset = 9 oz / 266.16 g)
5/16	0.40 (11.83)
1/4	0.27 (7.98)

Units are factory charged for 15 ft (4.6 m) of 3/8" liquid line. The factory charge for 3/8" lineset 9 oz. When using other length or diameter liquid lines, charge adjustments are required per the chart above.

Charging Formula:

[(Lineset oz/ft x total length) – (factory charge for lineset)] = charge adjustment

Example 1: System has 15 ft of line set using existing 1/4" liquid line. What charge adjustment is required?

Formula: (.27 oz/ft x 15ft) – (9 oz) = (-4.95) oz.

Net result is to remove 4.95 oz of refrigerant from the system

Example 2: System has 45 ft of existing 5/16" liquid line. What is the charge adjustment?

Formula: (.40 oz/ft. x 45ft) – (9 oz.) = 9 oz.

Net result is to add 9 oz of refrigerant to the system

LONG LINE APPLICATIONS

An application is considered Long Line, when the refrigerant level in the system requires the use of accessories to maintain acceptable refrigerant management for systems reliability. See Accessory Usage Guideline table for required accessories. Defining a system as long line depends on the liquid line diameter, actual length of the tubing, and vertical separation between the indoor and outdoor units.

For Air Conditioner systems, the chart below shows when an application is considered Long Line.

AC WITH PURON® REFRIGERANT LONG LINE DESCRIPTION ft (m)
Beyond these lengths, long line accessories are required

Liquid Line Size	Units On Same Level	Outdoor Below Indoor	Outdoor Above Indoor
1/4	No accessories needed within allowed lengths	No accessories needed within allowed lengths	175 (53.3)
5/16	120 (36.6)	50 (15.2) vertical or 120 (36.6) total	120 (36.6)
3/8	80 (24.4)	35 (10.7) vertical or 80 24.4) total	80 (24.4)

Note: See Long Line Guideline for details

VAPOR LINE SIZING AND COOLING CAPACITY LOSS

Acceptable vapor line diameters provide adequate oil return to the compressor while avoiding excessive capacity loss. The suction line diameters shown in the chart below are acceptable for AC systems with Puron refrigerant:

Vapor Line Sizing and Cooling Capacity Losses — Puron® Refrigerant 1-Stage Air Conditioner Applications

Unit Nominal Size (Btuh)	Maximum Liquid Line Diameters (In. OD)	Vapor Line Diameters (In. OD)	Cooling Capacity Loss (%) Total Equivalent Line Length ft. (m)								
			26–50 (7.9–15.2)	51–80 (15.5–24.4)	81–100 (24.7–A.5)	101–125 (30.8–38.1)	126–150 (38.4–45.7)	151–175 (46.0–53.3)	176–200 (53.6–61.0)	201–225 (61.3–68.6)	226–250 (68.9–76.2)
018 1 Stage AC with Puron	3/8	1/2	1	2	3	5	6	7	8	9	11
		5/8	0	1	1	1	2	2	2	3	3
		3/4	0	0	0	0	1	1	1	1	1
024 1 Stage AC with Puron	3/8	5/8	0	1	2	2	3	3	4	5	5
		3/4	0	0	1	1	1	1	1	2	2
		7/8	0	0	0	0	0	1	1	1	1
030 1 Stage AC with Puron	3/8	5/8	1	2	3	3	4	5	6	7	8
		3/4	0	0	1	1	1	2	2	2	3
		7/8	0	0	0	0	1	1	1	1	1
036 1 Stage AC with Puron	3/8	5/8	1	2	4	5	6	8	9	10	12
		3/4	0	1	1	2	2	3	3	4	4
		7/8	0	0	0	1	1	1	1	2	2
042 1 Stage AC with Puron	3/8	3/4	0	1	2	2	3	4	4	5	6
		7/8	0	0	1	1	1	2	2	2	3
		1 1/8	0	0	0	0	0	0	0	0	0
048 1 Stage AC with Puron	3/8	3/4	0	1	2	3	4	5	5	6	7
		7/8	0	0	1	1	2	2	2	3	3
		1 1/8	0	0	0	0	0	0	0	1	1
060 1 Stage AC with Puron	3/8	3/4	1	2	4	5	6	7	9	10	11
		7/8	0	1	2	2	3	4	4	5	5
		1 1/8	0	0	0	1	1	1	1	1	1

Applications in this area may be long line and may have height restrictions. See the *Residential Piping and Long Line Guideline*.

ACCESSORY USAGE GUIDELINE

ACCESSORY	REQUIRED FOR LOWMBIENT COOLING APPLICATIONS (Below 55°F / 22.8°C)	REQUIRED FOR LONG LINE APPLICATIONS* (Over 80 Ft./24.4 m)	REQUIRED FOR SEA COAST APPLICATIONS (Within 2 miles/3.2 km)
Ball Bearing Fan Motor	Yes†	No	No
Compressor Start Assist Capacitor and Relay	Yes	Yes	No
Crankcase Heater	Yes	Yes	No
Evaporator Freeze Thermostat	Yes	No	No
Hard Shut–Off TXV	Yes	Yes	Yes
Liquid Line Solenoid Valve	No	See Long–Line Application Guideline	No
Low Ambient Kit (Pressure Switch)	Yes	No	No
Support Feet	Recommended	No	Recommended
Winter Start Control	Yes	No	No

* For tubing line sets between 80 and 200 ft. (24.4 and 76.2 m) and/or 20 ft. (6.1 m) vertical differential, refer to Residential Split–System Longline Application Guideline.

† Required for Low Ambient Controller (full modulation feature) and MotorMaster® Control only.

CA13NA

Accessory Description and Usage (Listed Alphabetically)

1. Compressor Start Assist - Capacitor and Relay

Start capacitor and relay gives a ”hard” boost to compressor motor at each start up.

Usage Guideline:

Required for reciprocating compressors in the following applications:

Long line

Low ambient cooling

Hard shut off expansion valve on indoor coil

Liquid line solenoid on indoor coil

Required for single-phase scroll compressors in the following applications:

Long line

Low ambient cooling

Suggested for all compressors in areas with a history of low voltage problems.

2. Compressor Start Assist — PTC Type

Solid state electrical device which gives a ”soft” boost to the compressor at each start-up.

Usage Guideline:

Suggested in installations with marginal power supply.

3. Crankcase Heater

An electric resistance heater which mounts to the base of the compressor to keep the lubricant warm during off cycles. Improves compressor lubrication on restart and minimizes the chance of liquid slugging.

Usage Guideline:

Required in low ambient cooling applications.

Required in long line applications.

4. Cycle Protector

The cycle protector is designed to prevent compressor short cycling. This control provides an approximate 5-minute delay after power to the compressor has been interrupted for any reason, including power outage, protector control trip, thermostat jiggling, or normal cycling.

Suggested in all commercial applications.

5. Evaporator Freeze Thermostat

An SPST temperature actuated switch that stops unit operation when evaporator reaches freeze-up conditions.

Usage Guideline:

Required when low ambient kit has been added.

6. Low Ambient Pressure Switch Kit

A long life pressure switch which is mounted to outdoor unit service valve. It is designed to cycle the outdoor fan motor in order to maintain head pressure within normal operating limits (approximately 100 psig to 225 psig). The control will maintain working head pressure at low ambient temperatures down to 0°F/-17.8°C when properly installed.

Usage Guideline:

A Low Ambient Pressure Switch or MotorMaster® Low Ambient Controller must be used when cooling operation is used at outdoor temperatures below 55°F (12.8°C).

Suggested for all commercial applications.

7. Support Feet

Four stick-on plastic feet that raise the unit 4 in. (101.6 mm) above the mounting pad. This allows sand, dirt, and other debris to be flushed from the unit base, minimizing corrosion.

Usage Guideline:

Suggested in the following applications:

Coastal installations.

Windy areas or where debris is normally circulating.

Rooftop installations.

For improved sound ratings.

8. Thermostatic Expansion Valve (TXV)

A modulating flow-control valve which meters refrigerant liquid flow rate into the evaporator in response to the superheat of the refrigerant gas leaving the evaporator.

Kit includes valve, adapter tubes, and external equalizer tube. Hard shut off types are available.

NOTE: When using a hard shut off TXV with single phase reciprocating compressors, a Compressor Start Assist Capacitor and Relay is required.

Usage Guideline:

Required to achieve AHRI ratings in certain equipment combinations. Refer to combination ratings.

Hard shut off TXV or LLS required in air conditioner long line applications.

Required for use on all zoning systems.

9. Winter Start Control

This control is designed to alleviate nuisance opening of the low-pressure switch by bypassing it for the first 3 minutes of operation.

DIMENSIONS – ENGLISH

UNIT	SERIES	ELECTRICAL CHARACTERISTICS				A	B	C	D	E	F	G	K	L	M	N	P	OPERATING WEIGHT (LBS)	SHIPPING WEIGHT (LBS)	SHIPPING DIMENSIONS (L x W x H)
CA13NA018	A	X	O	O	O	23 1/8"	24 13/16"	3 3/4"	3/4"	4 7/16"	18 1/16"	7 13/16"	2 13/16"	1/2"	12"	11 3/4"	11 7/8"	108	124	24 1/8" X 24 1/8" X 27 3/16"
CA13NA024	A	X	O	O	O	23 1/8"	24 13/16"	3 3/4"	3/4"	4 7/16"	18 1/16"	7 13/16"	2 13/16"	1/2"	12"	11 3/4"	11 7/8"	111	127	24 1/8" X 24 1/8" X 27 3/16"
CA13NA030	A	X	O	O	O	23 1/8"	28 7/16"	3 3/4"	3/4"	4 7/16"	18 1/16"	7 13/16"	2 13/16"	1/2"	12"	11 3/4"	12 1/2"	114	130	24 1/8" X 24 1/8" X 30 5/8"
CA13NA036	A	X	O	O	O	23 1/8"	35 3/16"	3 7/8"	7/8"	4 7/16"	18 1/16"	7 13/16"	2 13/16"	1/2"	12"	11 3/4"	13 3/4"	127	144	24 1/8" X 24 1/8" X 37 7/16"
CA13NA042	A	X	O	O	O	31 3/16"	31 13/16"	3 7/8"	7/8"	6 9/16"	24 11/16"	9 1/8"	2 15/16"	5/8"	16"	15 1/2"	13 3/4"	172	195	32 3/16" X 32 3/16" X 34"
CA13NA048	A	X	O	O	O	31 3/16"	35 3/16"	3 7/8"	7/8"	6 9/16"	24 11/16"	9 1/8"	2 15/16"	5/8"	16"	15 1/2"	14 1/2"	185	212	32 3/16" X 32 3/16" X 37 7/16"
CA13NA060	A	X	O	O	O	31 3/16"	28 7/16"	3 7/8"	7/8"	6 9/16"	24 11/16"	9 1/8"	2 15/16"	5/8"	16"	15 1/2"	12 3/4"	198	224	32 3/16" X 32 3/16" X 30 5/8"
		208-230-1-60	230-1-60	208/230-3-60	460-3-60															

X = YES
O = NO

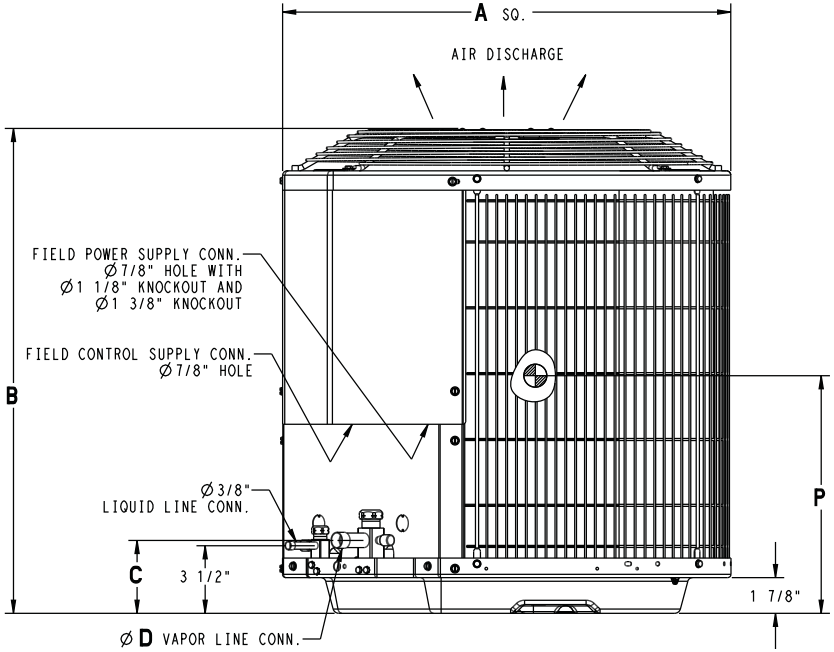

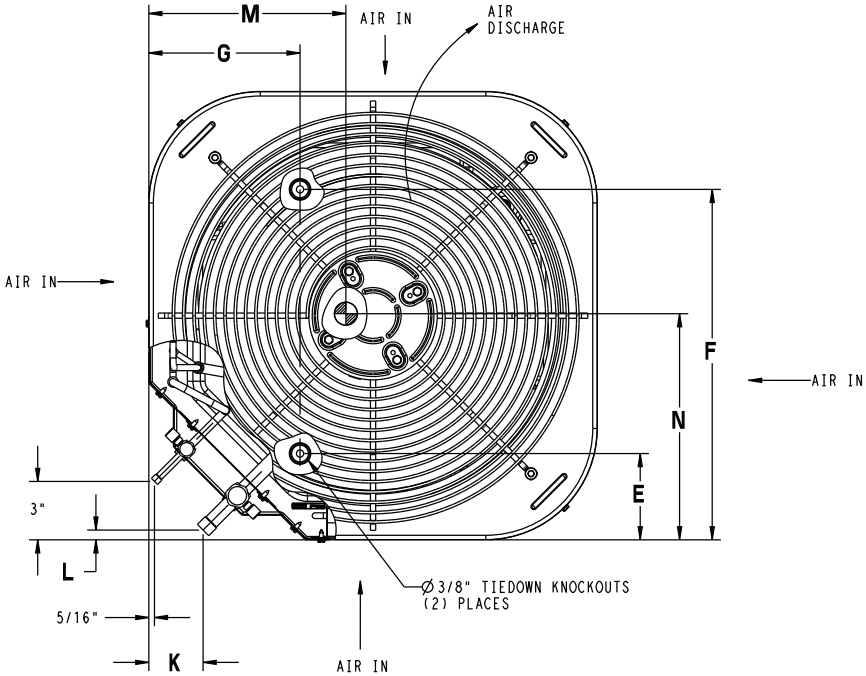

UNIT SIZE	MINIMUM MOUNTING PAD DIMENSIONS
18,24,30,36	23 1/2" X 23 1/2"
--	26" X 26"
42,48,60	31 1/2" X 31 1/2"
--	35" X 35"

DIMENSIONS – SI

UNIT	SERIES	ELECTRICAL CHARACTERISTICS				A	B	C	D	E	F	G	K	L	M	N	P	OPERATING WEIGHT (Kgs)	SHIPPING WEIGHT (Kgs)	SHIPPING DIMENSIONS (L x W x H)
CA13NA018	A	X	O	O	O	587.4	630.2	95.2	19.0	112.7	458.8	198.4	71.4	12.7	304.8	298.4	301.6	49.0	56.2	612.8 X 612.8 X 690.6
CA13NA024	A	X	O	O	O	587.4	630.2	95.2	19.0	112.7	458.8	198.4	71.4	12.7	304.8	298.4	301.6	50.3	57.6	612.8 X 612.8 X 690.6
CA13NA030	A	X	O	O	O	587.4	722.3	95.2	19.0	112.7	458.8	198.4	71.4	12.7	304.8	298.4	317.5	51.7	59.0	612.8 X 612.8 X 777.9
CA13NA036	A	X	O	O	O	587.4	893.8	98.4	22.2	112.7	458.8	198.4	71.4	12.7	304.8	298.4	349.2	57.6	65.3	612.8 X 612.8 X 950.9
CA13NA042	A	X	O	O	O	792.2	808.0	98.4	22.2	166.7	627.1	231.8	74.6	15.9	406.4	393.7	349.2	78.0	88.4	817.6 X 817.6 X 863.6
CA13NA048	A	X	O	O	O	792.2	893.8	98.4	22.2	166.7	627.1	231.8	74.6	15.9	406.4	393.7	368.3	83.9	96.2	817.6 X 817.6 X 950.8
CA13NA060	A	X	O	O	O	792.2	722.3	98.4	22.2	166.7	627.1	231.8	74.6	15.9	406.4	393.7	323.8	89.8	101.6	817.6 X 817.6 X 777.9
		208-230-1-60	230-1-60	208/230-3-60	460-3-60															

X = YES
O = NO

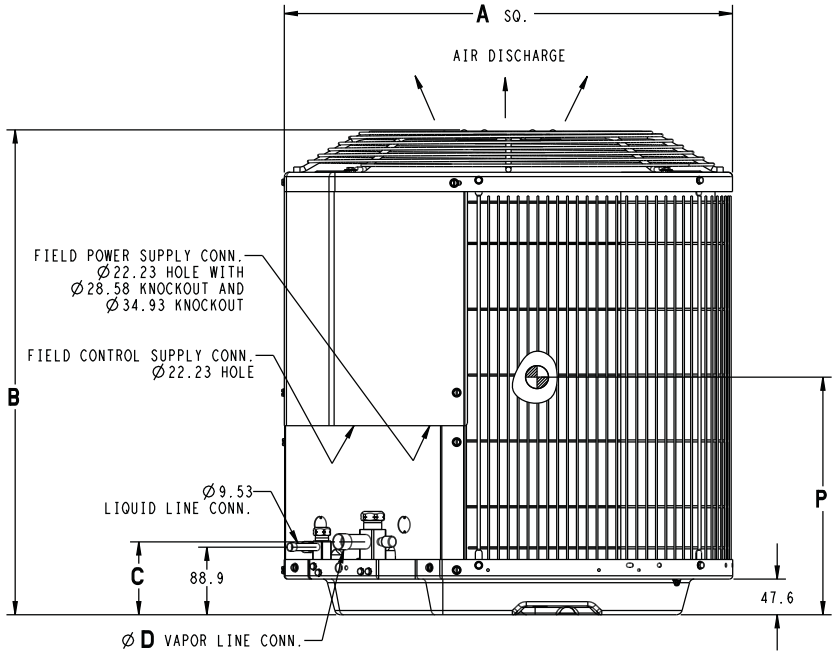

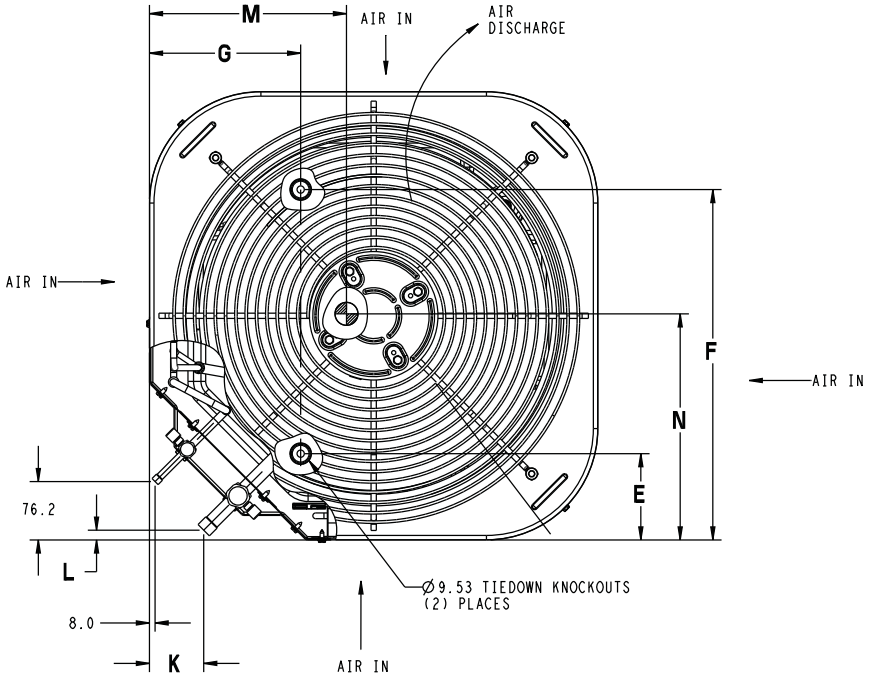

UNIT SIZE	MINIMUM MOUNTING PAD DIMENSIONS
18,24,30,36	596.9 X 596.9
--	660.4 X 660.4
42,48,60	800.1 X 800.1
--	889.0 X 889.0

CLEARANCES

Clearances (various examples)

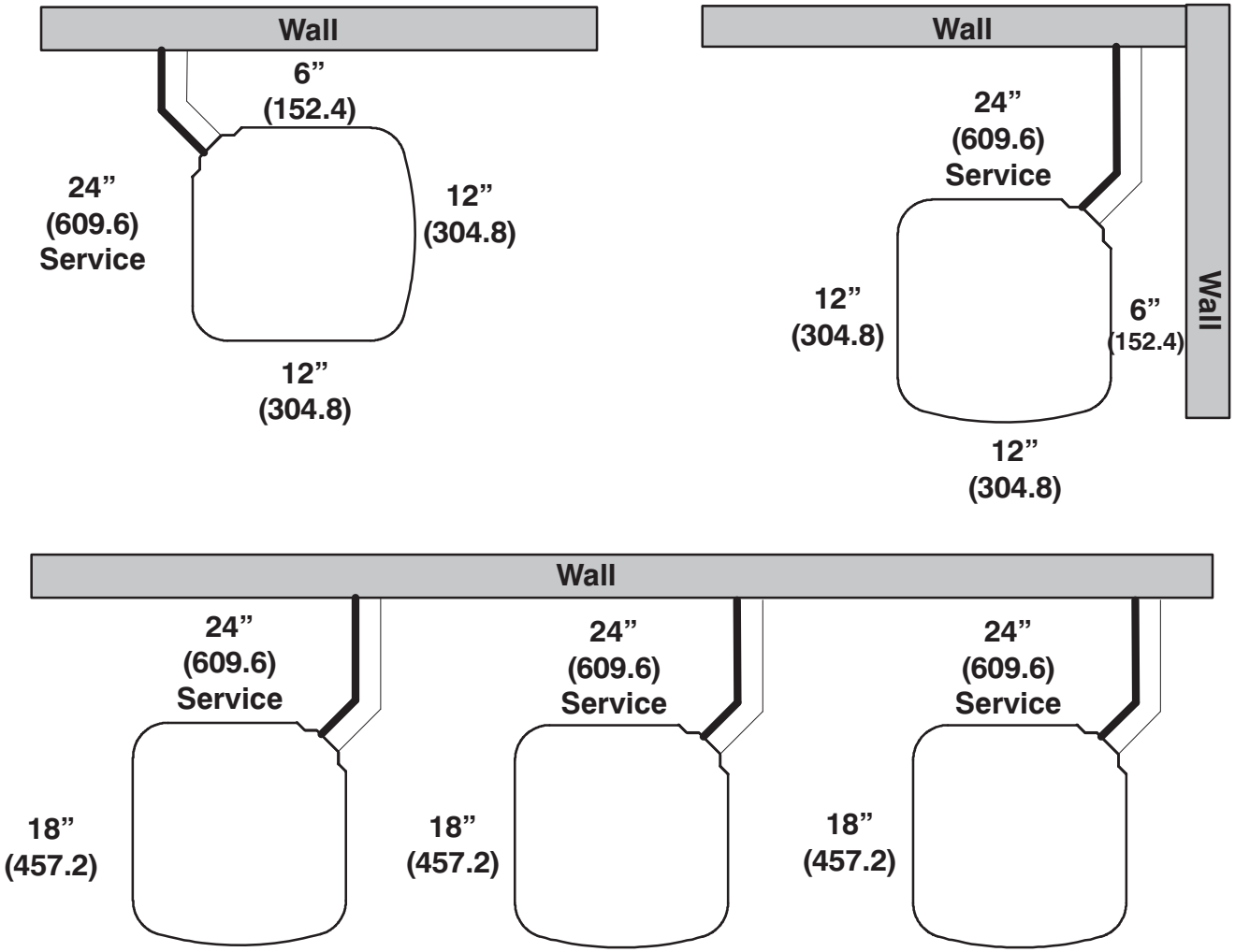

Note: Numbers in ( ) = mm

IMPORTANT: When installing multiple units in an alcove, roof well, or partially enclosed area, ensure there is adequate ventilation to prevent re-circulation of discharge air.

GUIDE SPECIFICATIONS
GENERAL

System Description

Outdoor-mounted, air-cooled, split-system air conditioner unit suitable for ground or rooftop installation. Unit consists of a hermetic compressor, an air-cooled coil, propeller-type condenser fan, and a control box. Unit will discharge supply air upward as shown on contract drawings. Unit will be used in a refrigeration circuit to match up to a packaged fan coil or coil unit.

Quality Assurance

— Unit will be rated in accordance with the latest edition of AHRI Standard 210.

— Unit will be certified for capacity and efficiency, and listed in the latest AHRI directory.

— Unit construction will comply with latest edition of ANSI/ ASHRAE and with NEC.

— Unit will be constructed in accordance with UL standards and will carry the UL label of approval. Unit will have c-UL-us approval.

— Unit cabinet will be capable of withstanding Federal Test Method Standard No. 141 (Method 6061) 500-hr salt spray test.

— Air-cooled condenser coils will be leak tested at 150 psig and pressure tested at 450 psig.

— Unit constructed in ISO9001 approved facility.

Delivery, Storage, and Handling

— Unit will be shipped as single package only and is stored and handled per unit manufacturer's recommendations.

Warranty (for inclusion by specifying engineer)

— U.S. and Canada only.

PRODUCTS

Equipment

Factory assembled, single piece, air-cooled air conditioner unit. Contained within the unit enclosure is all factory wiring, piping, controls, compressor, refrigerant charge Puron® (R-410A), and special features required prior to field start-up.

Unit Cabinet

— Unit cabinet will be constructed of galvanized steel, bonderized, and coated with a powder coat paint.

— 3 phase equipment available with dense grille only.

— Single phase equipment available with wide (W) or dense (A) grille option.

Fans

— Condenser fan will be direct-drive propeller type, discharging air upward.

— Condenser fan motors will be totally enclosed, 1-phase type with class B insulation and permanently lubricated bearings. Shafts will be corrosion resistant.

— Fan blades will be statically and dynamically balanced.

— Condenser fan openings will be equipped with coated steel wire safety guards.

Compressor

— Compressor will be hermetically sealed.

— Compressor will be mounted on rubber vibration isolators.

Condenser Coil

— Condenser coil will be air cooled.

— Coil will be constructed of aluminum fins mechanically bonded to copper tubes which are then cleaned, dehydrated, and sealed.

Refrigeration Components

— Refrigeration circuit components will include liquid-line shutoff valve with sweat connections, vapor-line shutoff valve with sweat connections, system charge of Puron® (R-410A) refrigerant, and compressor oil.

— Unit will be equipped with high-pressure switch, low pressure switch and filter drier for Puron refrigerant.

Operating Characteristics

— The capacity of the unit will meet or exceed _____ Btuh at a suction temperature of _____ °F/°C. The power consumption at full load will not exceed _____ kW.

— Combination of the unit and the evaporator or fan coil unit will have a total net cooling capacity of _____ Btuh or greater at conditions of _____ CFM entering air temperature at the evaporator at _____ °F/°C wet bulb and _____ °F/°C dry bulb, and air entering the unit at _____ °F/°C.

— The system will have a SEER of _____ Btuh/watt or greater at DOE conditions.

Electrical Requirements

— Nominal unit electrical characteristics will be _____ v, single phase, 60 hz. The unit will be capable of satisfactory operation within voltage limits of _____ v to _____ v.

— Unit electrical power will be single point connection.

— Control circuit will be 24v.

Special Features

— Refer to section of this literature identifying accessories and descriptions for specific features and available enhancements.

SYSTEM DESIGN SUMMARY

1. Intended for outdoor installation with free air inlet and outlet. Outdoor fan external static pressure available is less than 0.01-IN W.C.
2. Minimum outdoor operating air temperature without low-ambient operation accessory is 55°F (12.8°C).
3. Maximum outdoor operating air temperature is 125°F (51.7°C).
4. For reliable operation, unit should be level in all horizontal planes.
5. For interconnecting refrigerant tube lengths greater than 80 ft (23.4 m) and/or 35 ft (10.7 m) vertical differential, consult Residential Piping and Longline Guideline and Service Manual available from equipment distributor.
6. If any refrigerant tubing is buried, provide a 6 in. (152.4 mm) vertical rise to the valve connections at the unit. Refrigerant tubing lengths up to 36 in. (914.4 mm) may be buried without further consideration. Do not bury refrigerant lines longer than 36 in. (914.4 mm).
7. Use only copper wire for electric connection at unit. Aluminum and clad aluminum are not acceptable for the type of connector provided.
8. Do not apply capillary tube indoor coils to these units.
9. Factory-supplied filter drier must be installed.

FFMA
Base Series Fan Coil
Sizes 018 thru 037

Carrier
turn to the experts

Product Data

A13417

FEATURES

The FFMA Series Fan Coil unit is primarily designed for apartment applications as an upflow only indoor fan coil for split-system heat pumps for use with Puron® refrigerant. Accessory field-installed electric heat kits are available in 5, 7.5 or 10 kW sizes. The 018, 024, 030, and 036 size units use a piston refrigerant metering device. The 019, 025, 031 and 037 size units come equipped with a TXV. All unit sizes are factory-configured for Puron refrigerant. However, they can be used for R-22 applications with the addition of an accessory R-22 TXV kit.

This fan coil may be installed in a frame mount or wall hung applications. The cabinet sizes allow units to fit between standard stud spacings. No return-air ductwork is required if the application provides for return air in the front of the cabinet through a louvered closet door or optional louvered wall panel. This unit is field convertible to bottom return without the need for an additional accessory kit.

The cabinet exterior is made of galvanized sheet metal. The cabinet is fully insulated to meet applications in conditioned space. This unit is not approved for installation in unconditioned spaces.

The FFMA 018, 024, 030, and 036 sizes use a 3-speed PSC motor. The FFMA 019, 025, 031, and 037 sizes use a 5-speed multi-tap ECM motor for efficiency. Motors are suspended at three points on rubber grommets for quieter operation.

Refrigerant lines and thermostat low voltage connections are made through the top while the high voltage connections are made from either the right, left or top side of the fan coil. Sweat-type refrigerant connections on both liquid and vapor lines make for swift, low-cost installation. All service access to the unit is conveniently located in the front.

Primary and secondary drain connections exit from the bottom or either side of the cabinet. Fresh air intake holes measuring 3.4” (35 mm) are located on each side of the unit cabinet and come capped from the factory.

MODEL NUMBER NOMENCLATURE

1	2	3	4	5	6	7	8	9	10	11	12
F	F	M	A	N	P	0	1	8	0	0	0

Product
F = Fan Coil

Type
F = Thru–the–Wall

Position
M = Upflow/Apartment

Series
A

Electrical
N = 208/230v, 1ph–60 Hz

Refrigerant
P = Puron® (R–410A)

Capacity
018, 019 = 18,000
024, 025 = 24,000
030, 031 = 30,000
036, 037 = 36,000

Heating Size
000 = No Factory–Installed Electric Heat

Puron™
the environmentally sound refrigerant

AHRI CERTIFIED™ www.ahridirectory.org

Use of the AHRI Certified TM Mark indicates a manufacturer's participation in the program For verification of certification for individual products, go to www.ahridirectory.org.

Certified System™
ISO 9001
QMI-SAI Global

INTERTEK ETL CM C US LISTED

DIMENSIONS

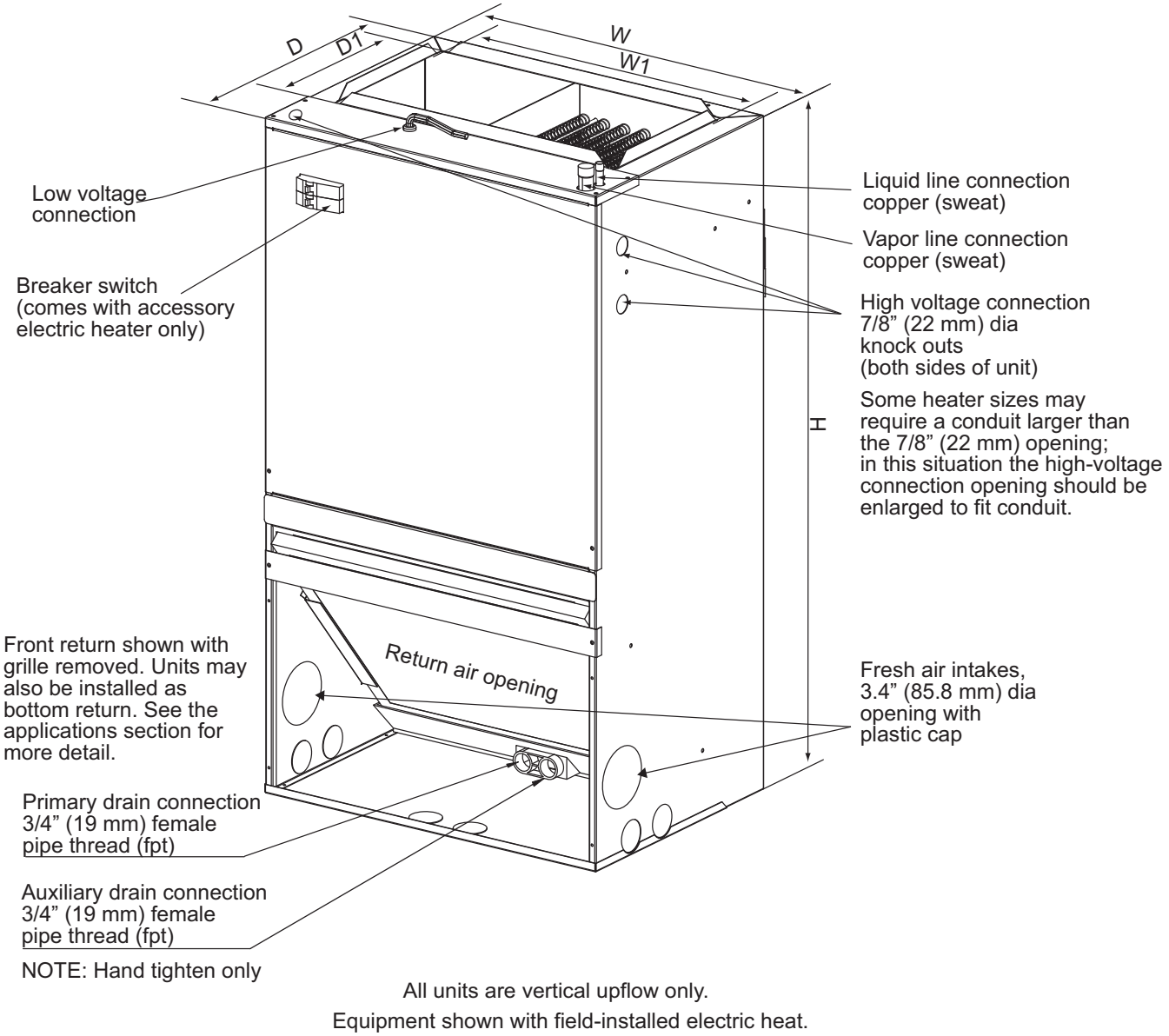

Fig. 1 – Dimensional Drawing with Circuit Breaker

DIMENSIONAL DATA

Model Size	Dimensions- In. (mm)					Unit Weight / Shipping Weight Lbs. (kg)
	Unit Height H	Unit Width W	Unit Width W1	Unit Depth D	Unit Depth D1	
18, 19	36-1/2 (928)	20-1/2 (521)	17-1/2 (442)	15 (381)	9-1/2 (242)	88 / 99 (40 / 45)
24, 25	36-1/2 (928)	20-1/2 (521)	17-1/2 (442)	15 (381)	9-1/2 (242)	88 / 99 (40 / 45)
30, 31	39-1/2 (1004)	22 (559)	18-4/5 (478)	19 (483)	9-1/2 (242)	110/ 121 (50 / 55)
36, 37	39-1/2 (1004)	22 (559)	18-4/5 (478)	19 (483)	9-1/2 (242)	110/ 121 (50 / 55)

SPECIFICATIONS

	Unit Size			
FFMANP0	**18**	**24**	**30**	**36**
Nominal Cooling Capacity (BTUH)	18,000	24,000	30,000	36,000
COIL				
Puron- Refrigerant metering Device * (Piston)	50 (1.27)	57 (1.45)	70 (1.78)	72 (1.83)
Rows/Fins Per In.	17	17	17	17
Face Area Ft^2	2.1	2.1	3.0	3.0
Coil Configuration	Slope			
BLOWER & MOTOR				
Air Discharge	Upflow			
Blower Type	Direct Drive			
CFM (Nominal)	600	800	1000	1200
Motor Type	PSC	PSC	PSC	PSC
Motor HP	1/6	1/4	1/3	1/2
Rated RPM	1075	1075	1075	1075
Motor Speeds	3	3	3	3
FILTER				
Field Installed	16x20x1 (406x508x25)	16x20x1 (406x508x25)	20x20x1 (508x508x25)	20x20x1 (508x508x25)
CONNECTIONS (Sweat)				
Suction – in. (mm)	3/4 In. (19 mm)			
Liquid – in. (mm)	3/8 In. (9.5 mm)			
Condensate (FPT) In. (mm)	3/4 In. (19 mm)			
ELECTRICAL DATA				
Voltage	208/230	208/230	208/230	208/230
Hertz	60	60	60	60
Circuit Amps	0.8	1.0	1.28	1.8
Minimum Circuit Ampacity	1	1.3	1.6	2.3
Maximum Circuit Protector	15 (A)	15 (A)	15 (A)	15 (A)

* The piston included with the fan coil is unique to this product and **CANNOT** be replaced with the piston shipped with outdoor unit. Refer to the AHRI ratings to check if your combination can use the piston shipped with the unit or requires an accessory TXV.

	Unit Size			
FFMANP0	**19**	**25**	**31**	**37**
Nominal Cooling Capacity (BTUH)	18,000	24,000	30,000	36,000
COIL				
Puron- Refrigerant metering Device	TXV			
Rows/Fins Per In.	17	17	17	17
Face Area Ft^2	2.1	2.1	3.0	3.0
Coil Configuration	Slope			
BLOWER & MOTOR				
Air Discharge	Upflow			
Blower Type	Direct Drive			
CFM (Nominal)	600	800	1000	1200
Motor Type	ECM	ECM	ECM	ECM
Motor HP	1/3	1/3	1/2	1/2
Rated RPM	1050	1050	1050	1050
Motor Speeds	5	5	5	5
FILTER				
Field Installed	16x20x1 (406x508x25)	16x20x1 (406x508x25)	20x20x1 (508x508x25)	20x20x1 (508x508x25)
CONNECTIONS (Sweat)				
Suction – in. (mm)	3/4 In. (19 mm)			
Liquid – in. (mm)	3/8 In. (9.5 mm)			
Condensate (FPT) In. (mm)	3/4 In. (19 mm)			
ELECTRICAL DATA				
Voltage	208/230	208/230	208/230	208/230
Hertz	60	60	60	60
Circuit Amps	1.9	1.9	2.7	2.7
Minimum Circuit Ampacity	2.4	2.4	3.4	3.4
Maximum Circuit Protector	15 (A)	15 (A)	15 (A)	15 (A)

PERFORMANCE DATA

PSC– AIRFLOW PERFORMANCE (STANDARD CFM)

MODEL SIZE	BLOWER SPEEDS	EXTERNAL STATIC PRESSURE (In. W.C.)							
		0	0.1	0.2	0.3	0.4	0.5	0.6	0.7
18	High	776	733	695	653	610	564	525	464
	Med	661	624	585	546	502	454	415	354
	Low	565	529	487	448	405	353	299	244
24	High	917	881	830	790	739	687	631	564
	Med	819	785	745	703	654	604	544	480
	Low	668	631	591	551	506	464	403	343
30	High	1236	1176	1115	1064	1000	936	861	793
	Med	1113	1065	1014	962	908	842	772	701
	Low	935	894	852	807	755	694	631	561
36	High	1350	1292	1228	1167	1108	1045	981	902
	Med	1266	1198	1139	1088	1029	970	905	831
	Low	1115	1066	1015	966	918	861	801	722

– Shaded boxes represent airflow outside the required 300-450 cfm/ton.

NOTES:
1. Airflow based upon dry coil at 230V with no electric heat and factory–approved filter.
2. Airflow is equivalent for front or bottom return configurations.

ECM AIRFLOW PERFORMANCE (STANDARD CFM)

MODEL SIZE	BLOWER SPEEDS	EXTERNAL STATIC PRESSURE (IN WC.)								
		0	0.1	0.2	0.3	0.4	0.5	0.6	0.7	0.8
19	Tap (5)	884	854	833	803	771	737	700	668	632
	Tap (4)	796	767	737	709	675	645	612	579	538
	Tap (3)	714	681	654	616	588	555	527	494	459
	Tap (2) - Factory	653	619	584	558	525	494	463	434	396
	Tap (1)	581	545	511	472	440	407	374	344	329
25	Tap (5)	884	854	833	803	771	737	700	668	632
	Tap (4) - Factory	796	767	737	709	675	645	612	579	538
	Tap (3)	714	681	654	616	588	555	527	494	459
	Tap (2)	653	619	584	558	525	494	463	434	396
	Tap (1)	581	545	511	472	440	407	374	344	329
31	Tap (5)	1309	1272	1236	1200	1164	1125	1088	1051	1010
	Tap (4)	1122	1088	1056	1022	986	950	915	877	836
	Tap (3)	1109	1073	1038	1003	973	937	901	867	828
	Tap (2) - Factory	1010	975	941	904	869	835	793	751	704
	Tap (1)	936	899	862	833	793	755	710	664	619
37	Tap (5)	1309	1272	1236	1200	1164	1125	1088	1051	1010
	Tap (4) - Factory	1122	1088	1056	1022	986	950	915	877	836
	Tap (3)	1109	1073	1038	1003	973	937	901	867	828
	Tap (2)	1010	975	941	904	869	835	793	751	704
	Tap (1)	936	899	862	833	793	755	710	664	619

– Shaded boxes represent airflow outside the required 300-450 cfm/ton.

NOTES:
1. Airflow based upon dry coil at 230V with no electric heat and factory–approved filter. For 19, 25, 31 and 37 sizes, airflow at 208V is approximately the same as 230V because the multi–tap ECM motor is a constant torque motor. The torque doesn't drop off at the speeds in which the motor operates.
2. Airflow is equivalent for front or bottom return configurations.

AIRFLOW PERFORMANCE (CFM)

CFM		
Size	**Min**	**Max**
18 / **19**	450	675
24 / **25**	600	900
30 / **31**	750	1125
36 / **37**	900	1350

PERFORMANCE DATA (CONT.)

GROSS COOLING CAPACITIES (mbh)

UNIT SIZE	INDOOR COIL AIR		SATURATED TEMPERATURE LEAVING EVAPORATOR °F (°C)														
			35 (2)			40 (4)			45 (7)			50 (10)			55 (13)		
	CFM	EWB	TC	SHC	BF	TC	SHC	BF	TC	SHC	BF	TC	SHC	BF	TC	SHC	BF
18 / 19	525	72 (22)	38	18	0.00	35	17	0.00	31	15	0.00	27	14	0.00	22	12	0.00
		67 (19)	32	19	0.00	28	18	0.00	25	16	0.00	20	14	0.00	15	12	0.00
		62 (17)	26	20	0.00	22	18	0.00	19	17	0.01	15	15	0.07	13	13	0.21
	600	72 (22)	42	20	0.00	38	18	0.00	34	17	0.00	30	15	0.00	24	13	0.00
		67 (19)	34	21	0.00	31	19	0.00	26	17	0.00	22	16	0.00	17	14	0.01
		62 (17)	28	22	0.01	24	20	0.01	20	19	0.01	17	17	0.08	14	14	0.22
	675	72 (22)	45	21	0.00	41	20	0.00	37	18	0.00	32	16	0.00	26	14	0.00
		67 (19)	37	23	0.01	33	21	0.01	29	19	0.01	24	17	0.01	18	15	0.01
		62 (17)	30	24	0.01	26	22	0.01	22	20	0.01	19	19	0.10	16	16	0.24
24 / 25	700	72 (22)	46	22	0.00	43	20	0.00	38	19	0.00	33	17	0.00	27	15	0.00
		67 (19)	38	24	0.01	35	22	0.01	30	20	0.01	25	18	0.01	19	16	0.01
		62 (17)	31	25	0.01	27	24	0.01	23	22	0.02	20	20	0.11	17	17	0.24
	800	72 (22)	50	24	0.00	46	22	0.00	41	20	0.01	36	18	0.01	30	16	0.01
		67 (19)	41	26	0.01	37	24	0.01	32	22	0.01	27	20	0.01	21	18	0.02
		62 (17)	34	28	0.01	30	26	0.01	25	25	0.03	22	22	0.14	19	19	0.26
	900	72 (22)	53	25	0.01	48	24	0.01	44	22	0.01	38	20	0.01	32	17	0.01
		67 (19)	44	28	0.01	39	26	0.01	34	24	0.01	29	22	0.02	22	19	0.02
		62 (17)	36	30	0.02	32	28	0.02	27	27	0.05	24	24	0.16	21	21	0.28
30 / 31	875	72 (22)	67	33	0.00	61	30	0.00	54	27	0.00	46	23	0.00	37	20	0.00
		67 (19)	55	34	0.01	49	31	0.01	41	28	0.01	33	24	0.01	23	20	0.01
		62 (17)	44	35	0.01	38	32	0.01	30	28	0.01	24	24	0.07	20	20	0.23
	1000	72 (22)	74	37	0.00	67	33	0.00	59	30	0.00	50	26	0.00	40	22	0.01
		67 (19)	61	38	0.01	54	34	0.01	46	31	0.01	37	27	0.01	25	22	0.01
		62 (17)	49	39	0.01	42	35	0.01	34	31	0.02	27	27	0.08	22	22	0.24
	1100	72 (22)	79	39	0.00	72	36	0.00	63	32	0.01	54	28	0.01	43	24	0.01
		67 (19)	65	41	0.01	57	37	0.01	49	33	0.01	39	29	0.01	28	24	0.02
		62 (17)	52	42	0.02	45	38	0.02	36	34	0.02	29	29	0.09	24	24	0.25
36 / 37	1050	72 (22)	73	36	0.00	67	33	0.00	59	29	0.01	51	26	0.01	41	22	0.01
		67 (19)	60	38	0.01	54	34	0.01	46	31	0.01	37	27	0.01	27	23	0.02
		62 (17)	49	39	0.01	42	36	0.01	34	32	0.02	28	28	0.09	23	23	0.24
	1200	72 (22)	80	39	0.00	73	36	0.00	65	32	0.01	55	28	0.01	45	24	0.01
		67 (19)	66	41	0.02	58	38	0.02	50	34	0.02	41	30	0.02	30	26	0.02
		62 (17)	53	43	0.02	46	40	0.02	38	36	0.02	32	32	0.11	26	26	0.25
	1350	72 (22)	85	42	0.00	78	39	0.01	69	35	0.01	59	31	0.02	48	27	0.02
		67 (19)	71	45	0.02	63	41	0.02	54	37	0.02	44	33	0.02	32	28	0.03
		62 (17)	57	47	0.02	49	44	0.02	41	39	0.03	35	35	0.12	29	29	0.26

CFM – Cubic Ft per Minute
EWB – Entering Wet Bulb °F (°C)
LWB – Leaving Wet Bulb °F (°C)
TC – Gross Cooling Capacity 1000 Btuh
SHC – Gross Sensible Capacity 1000 Btuh
BF – Bypass Factor
MBH – 1000 Btuh

NOTES:

1. Contact manufacturer for cooling capacities at conditions other than shown in table.
2. Formulas:
   Leaving db = entering db $-\frac{\text{sensible heat cap.}}{1.09 \times \text{CFM}}$
   Leaving wb = wb corresponding to enthalpy of air leaving coil (h_{lwb})
   $h_{lwb} = h_{ewb} - \frac{\text{total capacity (Btuh)}}{4.5 \times \text{CFM}}$
   where h_{ewb} = enthalpy of air entering coil. Direct interpolation is permissible. Do not extrapolate.
3. SHC is based on 80°F (27°C) db temperature of air entering coil. Below 80°F (27°C) db, subtract (Correction Factor x CFM) from SHC. Above 80°F (27°C) db, add (Correction Factor x CFM) to SHC.
4. Bypass Factor = 0 indicates no psychometric solution. Use bypass factor of next lower EWB for approximation.

SHC CORRECTION FACTOR

BYPASS FACTOR	ENTERING AIR DRY–BULB TEMPERATURE (°F)					
	79	78	77	76	75	Under 75
	81	82	83	84	85	Over 85
	ENTERING AIR DRY–BULB TEMPERATURE (°C)					
	26	25	25	24	24	Under 75
	27	28	28	29	29	Over 85
	Correction Factor					
0.10	.098	1.96	2.94	3.92	4.91	Use formula shown below
0.20	0.87	1.74	2.62	3.49	4.36	
0.30	0.76	1.53	2.29	3.05	3.82	

Interpolation is permissible.
Correction Factor = 1.09 x (1 – BF) x (db – 80)

PERFORMANCE DATA (CONT.)

ESTIMATED SOUND POWER LEVEL (dBA)

	CONDITIONS		OCTAVE BAND CENTER FREQUENCY						
UNIT SIZE	CFM	Ext Static Pressure	63	125	250	500	1000	2000	4000
18, 19	600	0.25	46	52.1	48.9	51.8	52.5	51.7	49.7
24, 25	800	0.25	54.1	57.1	58.6	59	61.5	59.8	57
30, 31	1000	0.25	51.6	52.6	52.6	53.3	56.1	52.8	59.7
36, 37	1200	0.25	52.6	52.3	54.6	54.3	57.2	53.8	50.4

* Estimated sound power levels have been derived using the method described in the 1987 ASHRAE HVAC Systems & Applications Handbook, Chapter 52, p. 52.7.

OPTIONAL FIELD-INSTALLED ELECTRIC HEAT PACKAGES

HEATER PART NUMBER WITH TDR	SIZES USED WITH	NOMINAL kw @ 240V	HEATER VOLTS-PHASE (60 Hz)	HEATER CAPACITY (MBH)		MIN. CIRCUIT AMPACITY		MAX. FUSE OR BREAKER (HACR) AMPACITY		APPROX. SHIP WGT. LBS. (kg)
				208	240	208	240	208	240	
EHK2–05B	18 – 37	5	208/240-1	14.8	17.1	22.6	26.1	30	30	5.1 (2.3)
EHK2–08B	18 – 37	7.5	208/240-1	22.2	25.6	33.9	39.1	50	50	5.1 (2.3)
EHK2–10B	18 – 37	10	208/240-1	29.6	34.1	45.2	52.1	60	60	5.1 (2.3)

OTHER ACCESSORIES

Kit Number	Description	Used on sizes
KFBLG0106LGL	Louvered Wall Panel with Frame (6 pack)	18, 19, 24, 25
KFBLG0106LGL	Louvered Wall Panel with Frame (6 pack)	30, 31, 36, 37
KSATX0601HSO	TXV Kit R-22	All
KSATX201PUR	TXV Kit Puron (R-410A)	18, 24, 30
KSATX301PUR	TXV Kit Puron (R-401A)	36
KFAET0150ETK	PVC Condensate Trap Kit (50 pack)	All
KFARA0110LGL	Return Air Opening Grille (10 pack)	18, 19, 24, 25
KFARA0210LGL	Return Air Opening Grille (10 pack)	30, 31, 36, 37

Copyright 2013 Carrier Corp. ● 7310 W. Morris St. ● Indianapolis, IN 46231
Edition Date: 12/13

Catalog No:FFMA−02PD

Manufacturer reserves the right to change, at any time, specifications and designs without notice and without obligations.

Replaces: FFMA−01PD

Goodman®
Air Conditioning & Heating

AWUF Series

Wall-Mount Air Handler

1½- to 3-Tons

Standard Features

- Suitable for use with refrigerants R-410A and R-22
- Equipped with a check flowrater for cooling-only and heat pump operation
- Direct-drive, multi-speed motor allows air volume variation for heating and cooling
- Sequence-controlled, rust-resistant nickel chromium heating elements of 3, 5, 8, and 10 kW
- Factory-installed pull-type disconnect
- Built-in filter rack (filter included)
- Aluminum tube coils on all models
- AHRI Certified
- ETL Listed

Cabinet Features

- Thermoplastic drain pan with bottom primary and secondary drain connections
- Built-in filter rack (filter included)
- Large chassis (2½- and 3-ton units) – front return only
- Small chassis (1½- and 2-ton units) – front or bottom return
- Wall-hanging bracket provided

Accessories

- Wall access doors:
  - WAD-1 fits AWUF18 and AWUF24
  - WAD-2 fits AWUF30 through AWUF37

10 YEAR PARTS LIMITED WARRANTY* R-410A REFRIGERANT

* Complete warranty details available from your local dealer or at www.goodmanmfg.com. To receive the 10-Year Parts Limited Warranty, online registration must be completed within 60 days of installation. Online registration is not required in California or Quebec.

NOMENCLATURE

A	W	U	F	24	05	1	6	AA
1	2	3	4	5,6	7,8	9	10	11,12

Brand
A - Single-Piece Air Handler

Unit Application
W - Wall Mount PSC Motor

Cabinet Finish
U - Unpainted

Expansion Device
F - Flowrater

Nominal Capacity Range
18 = 2 Tons 30 = 2½ Tons
24 = 2 Tons 36 = 3 Tons

Engineering *
Major/ Minor Revisions
*Not used for inventory management

Refrigerant
6 = R-410A or R-22

Electrical
1 - 208/240 V, 1 Phase, 60 Hz

Heater Kit
00 = No Heat 06 = 6 kW
03 = 3 kW 08 = 8 kW
05 = 5 kW 10 = 10 kW

Specifications

	AWUF 1803/0516B	AWUF 180516A	AWUF 180516B	AWUF 180816A	AWUF 180816B	AWUF 2403/0516B	AWUF 240516A	AWUF 240516B
Nominal Ratings								
Cooling (BTU/h)	18,000	18,000	18,000	18,000	18,000	24,000	24,000	24,000
Electric Heat (kW)	3, 5	5	5	8	8	3, 5	5	5
Blower								
Diameter	9	9	9	9	9	10	10	10
Width	6	6	6	6	6	6	6	6
Coil Drain Connection FPT	¾"	¾"	¾"	¾"	¾"	¾"	¾"	¾"
Service Valve								
Liquid	⅜"	⅜"	⅜"	⅜"	⅜"	⅜"	⅜"	⅜"
Suction	⅝"	⅝"	⅝"	⅝"	⅝"	⅝"	⅝"	⅝"
Electrical Data								
Voltage	240/208	240/208	240/208	240/208	240/208	240/208	240/208	240/208
Min Circuit Ampacity (240V)	15.1	26.7	26.6	39.7	39.6	15.1	26.7	26.6
Min Circuit Ampacity (208V)	17.3	23.3	23.3	34.6	34.6	17.3	23.3	23.3
Max. Overcurrent Protection (240V)	20	30	30	40	40	20	30	30
Max. Overcurrent Protection (208V)	20	30	25	40	35	20	30	25
Minimum VAC	197	197	197	197	197	197	197	197
Maximum VAC	253	253	253	253	253	253	253	253
Blower Motor								
FLA - HP	1.3 - 1/5	1.35 - 1/5	1.3 - 1/5	1.35 - 1/5	1.3 - 1/5	1.3 - 1/5	1.35 - 1/5	1.3 - 1/5
Ship Weight (lbs)	84	84	84	84	84	84	84	84

Specifications (cont.)

	AWUF 240816A	AWUF 24081/16B	AWUF 24101/16A	AWUF 24101/16B	AWUF 300316B	AWUF 30051/16B	AWUF 30081/16B	AWUF 30101/16B
Nominal Ratings								
Cooling (BTU/h)	24,000	24,000	24,000	24,000	30,000	30,000	30,000	30,000
Electric Heat (kW)	8	8	10	10	3, 5	5	8	10
Blower								
Diameter	10	10	10	10	9	9	9	9
Width	6	6	6	6	8	8	8	8
Coil Drain Connection FPT	¾"	¾"	¾"	¾"	¾"	¾"	¾"	¾"
Service Valve								
Liquid	⅜"	⅜"	⅜"	⅜"	⅜"	⅜"	⅜"	⅜"
Suction	⅝"	⅝"	⅝"	⅝"	¾"	¾"	¾"	¾"
Electrical Data								
Voltage	240/208	240/208	240/208	240/208	240/208	240/208	240/208	240/208
Min Circuit Ampacity (240V)	39.7	39.6	52.7	52.7	15.5	27	40	53
Min Circuit Ampacity (208V)	34.2	34.6	45.6	45.9	17.6	23.6	34.9	46.2
Max. Overcurrent Protection (240V)	40	40	60	60	20	30	40	60
Max. Overcurrent Protection (208V)	40	35	50	50	20	25	35	50
Minimum VAC	197	197	197	197	197	197	197	197
Maximum VAC	253	253	253	253	253	253	253	253
Blower Motor								
FLA - HP	1.35 - 1/5	1.3 - 1/5	1.35 - 1/5	1.3 - 1/5	1.58 - 1/3	1.58 - 1/3	1.58 - 1/3	1.58 - 1/3
Ship Weight (lbs)	84	84	84	84	93	109	109	109

Specifications (cont.)

	AWUF 310516A*	AWUF 310816A*	AWUF 321016A*	AWUF 36051/16B	AWUF 36081/16B
Nominal Ratings					
Cooling (BTU/h)	18,000-30,000	18,000-30,000	18,000-30,000	36,000	36,000
Electric Heat (kW)	5	8	10	5	8
Blower					
Diameter	10	10	10	9	9
Width	8	8	8	8	8
Coil Drain Connection FPT	¾"	¾"	¾"	¾"	¾"
Service Valve					
Liquid	⅜"	⅜"	⅜"	⅜"	⅜"
Suction	¾"	¾"	¾"	¾"	¾"
Electrical Data					
Voltage	240/208	240/208	240/208	240/208	240/208
Min Circuit Ampacity (240V)	30.1	43.1	56.2	27	40
Min Circuit Ampacity (208V)	26.8	38.1	49.4	23.6	34.9
Max. Overcurrent Protection (240V)	35	45	60	30	40
Max. Overcurrent Protection (208V)	30	40	50	25	35
Minimum VAC	197	197	197	197	197
Maximum VAC	253	253	253	253	253
Blower Motor					
FLA - HP	4.1 - 1/2	4.1 - 1/2	4.1 - 1/2	1.58 - 1/3	1.58 - 1/3
Ship Weight (lbs)	109	109	109	96	96

Specifications (cont.)

	AWUF 36101/16B	AWUF 370516B	AWUF 370816B	AWUF 371016B
Nominal Ratings				
Cooling (BTU/h)	36,000	36,000	36,000	36,000
Electric Heat (kW)	10	5	8	10
Blower				
Diameter	9	10	10	10
Width	8	8	8	8
Coil Drain Connection FPT	¾"	¾"	¾"	¾"
Service Valve				
Liquid	⅜"	⅜"	⅜"	⅜"
Suction	¾"	¾"	¾"	¾"
Electrical Data				
Voltage	240/208	240/208	240/208	240/208
Min Circuit Ampacity (240V)	53	30.1	43.1	56.2
Min Circuit Ampacity (208V)	46.2	26.8	38.1	49.4
Max. Overcurrent Protection (240V)	60	35	45	60
Max. Overcurrent Protection (208V)	50	30	40	50
Minimum VAC	197	197	197	197
Maximum VAC	253	253	253	253
Blower Motor				
FLA - HP	1.58 - 1/3	4.1 - 1/2	4.1 - 1/2	4.1 - 1/2
Ship Weight (lbs)	96	96	96	96

Airflow Data

Model	Motor Speed	CFM Delivered Against External Static Pressure				
		0.1”	0.2”	0.3”	0.4”	0.5”
AWUF18XX1/16A*	High	750	730	690	650	595
	Low	710	700	690	635	585
AWUF18XX16B*	High	755	715	670	615	545
	Low	740	700	655	595	535
AWUF24XX1/16A*	High	880	845	810	770	735
	Low	845	815	780	745	705
AWUF24XX16B*	High	900	870	835	795	760
	Low	865	835	800	765	725
AWUF30XX1/16A*	High	1250	1195	1135	1085	1010
	Low	1110	1055	1020	955	905
AWUF30XX16B*	High	1255	1120	1100	1020	950
	Low	1115	1010	990	900	820
AWUF310516XX	T5	875	865	830	805	765
	T4	1005	975	945	920	890
	T3	840	795	785	745	700
	T2	645	615	550	500	445
	T1	645	615	550	500	445
AWUF310816XX AWUF321016XX	T5	1090	1065	1040	1015	985
	T4	1005	975	945	920	890
	T3	840	795	785	745	700
	T2	645	615	550	500	445
	T1	645	615	550	500	445
AWUF36XX1/16A*	High	1280	1190	1110	1010	930
	Low	1170	1100	1030	950	890
AWUF36XX16B*	High	1215	1145	1070	985	890
	Low	1120	1065	1000	915	820
AWUF37XX16A*	High	1325	1285	1230	1180	1115
	Low	1085	1060	1030	995	950
AWUF37XX16B*	T5	1385	1205	1130	1045	950
	T4	1235	1180	1115	1040	955
	T3	1165	1120	1075	1025	945
	T2	1050	1010	970	930	860
	T1	1050	1010	970	930	860

Heating Capacity Correction Factor*

Supply Voltage	240	230	220	210	208
Correction Factor	1.00	.92	.84	.76	.74

* Multiply 240-volt capacity by correction factor

DIMENSIONS

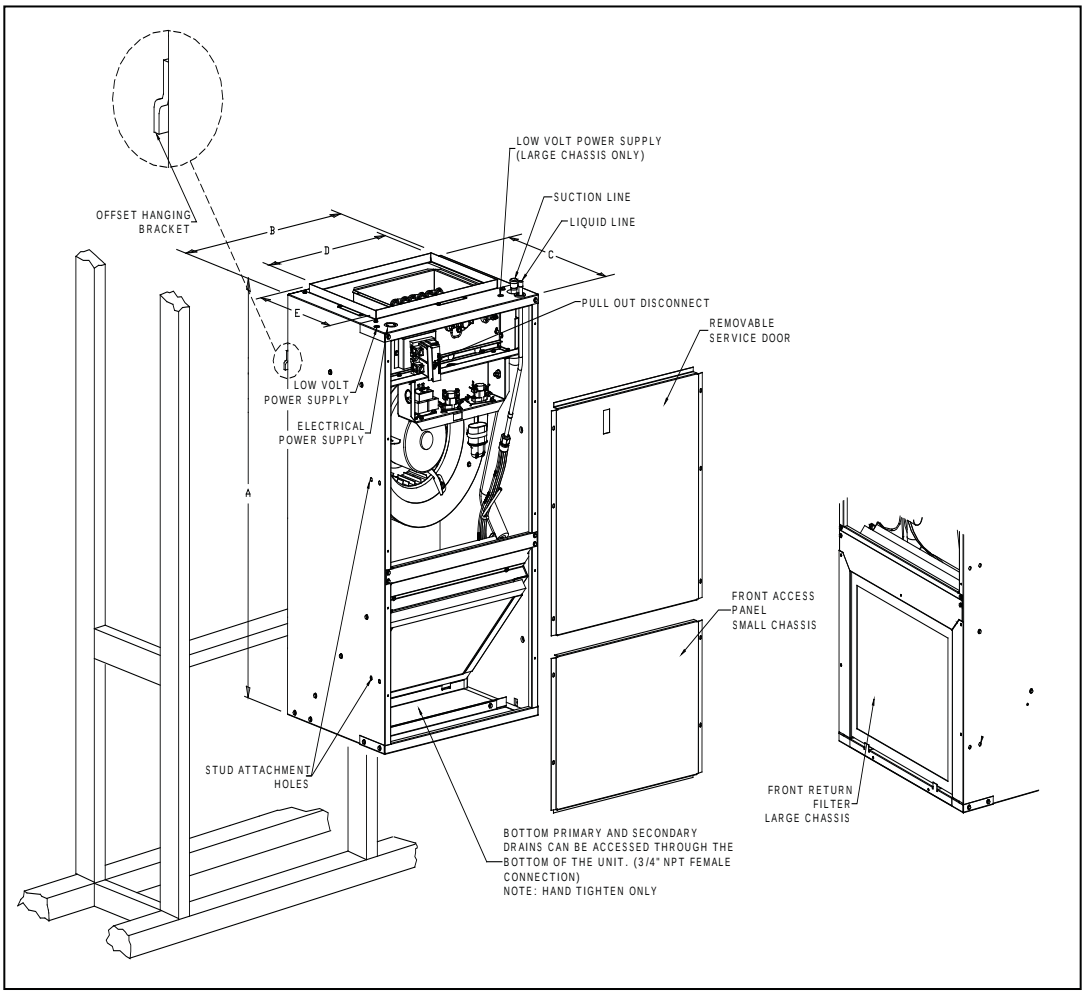

SMALL CHASSIS (AWUF18/24)	
A	36”
B	20 3/16”
C	16⅛”
D	16”
E	11”
Filter	14” x 18” x 1”

LARGE CHASSIS (AWUF30-37)	
A	36”
B	24”
C	21”
D	19⅞”
E	15⅞”
Filter (30/36)	16” x 20” x 1”
Filter (31/32/37)	18” x 20” x 1”

AWUF18/24/30/36 WIRING DIAGRAM

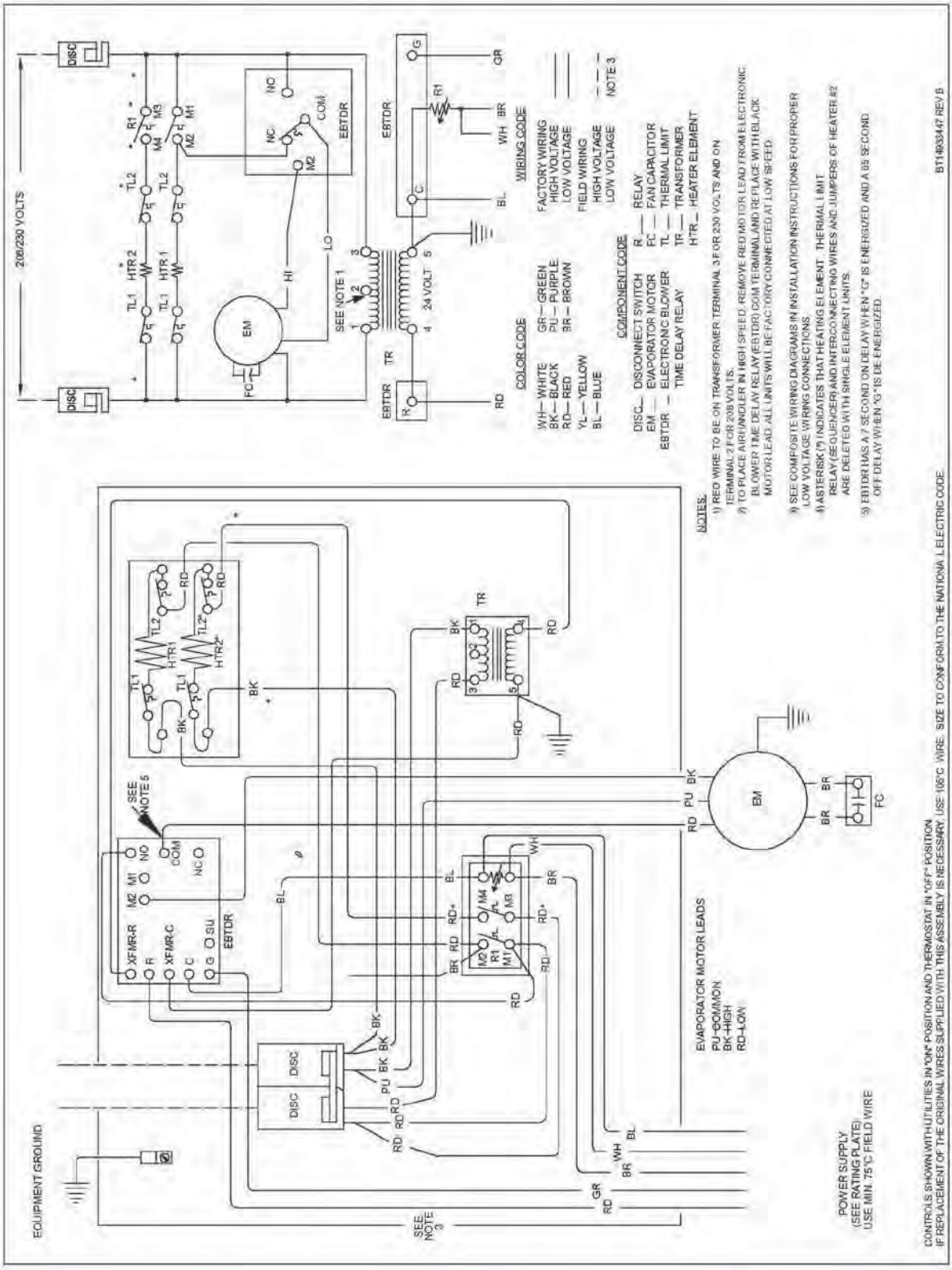

Wiring is subject to change. Always refer to the wiring diagram or the unit for the most up-to-date wiring.

WARNING **High Voltage:** Disconnect all power before servicing or installing this unit. Multiple power sources may be present. Failure to do so may cause property damage, personal injury, or death.

AWUF31/32 WIRING DIAGRAM

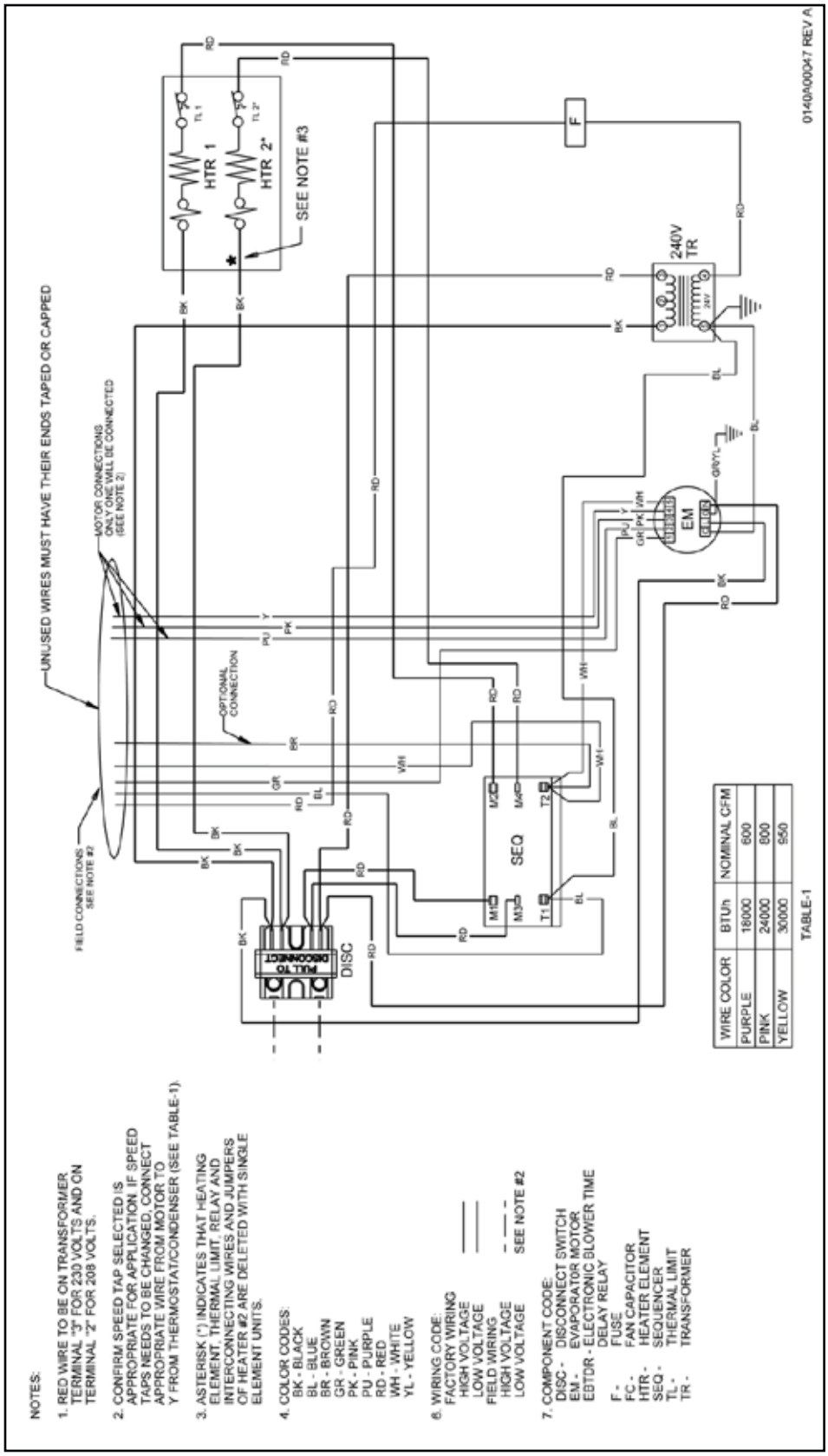

Wiring is subject to change. Always refer to the wiring diagram or the unit for the most up-to-date wiring.

WARNING

High Voltage: Disconnect all power before servicing or installing this unit. Multiple power sources may be present. Failure to do so may cause property damage, personal injury, or death.

AWUF37 Wiring Diagrams

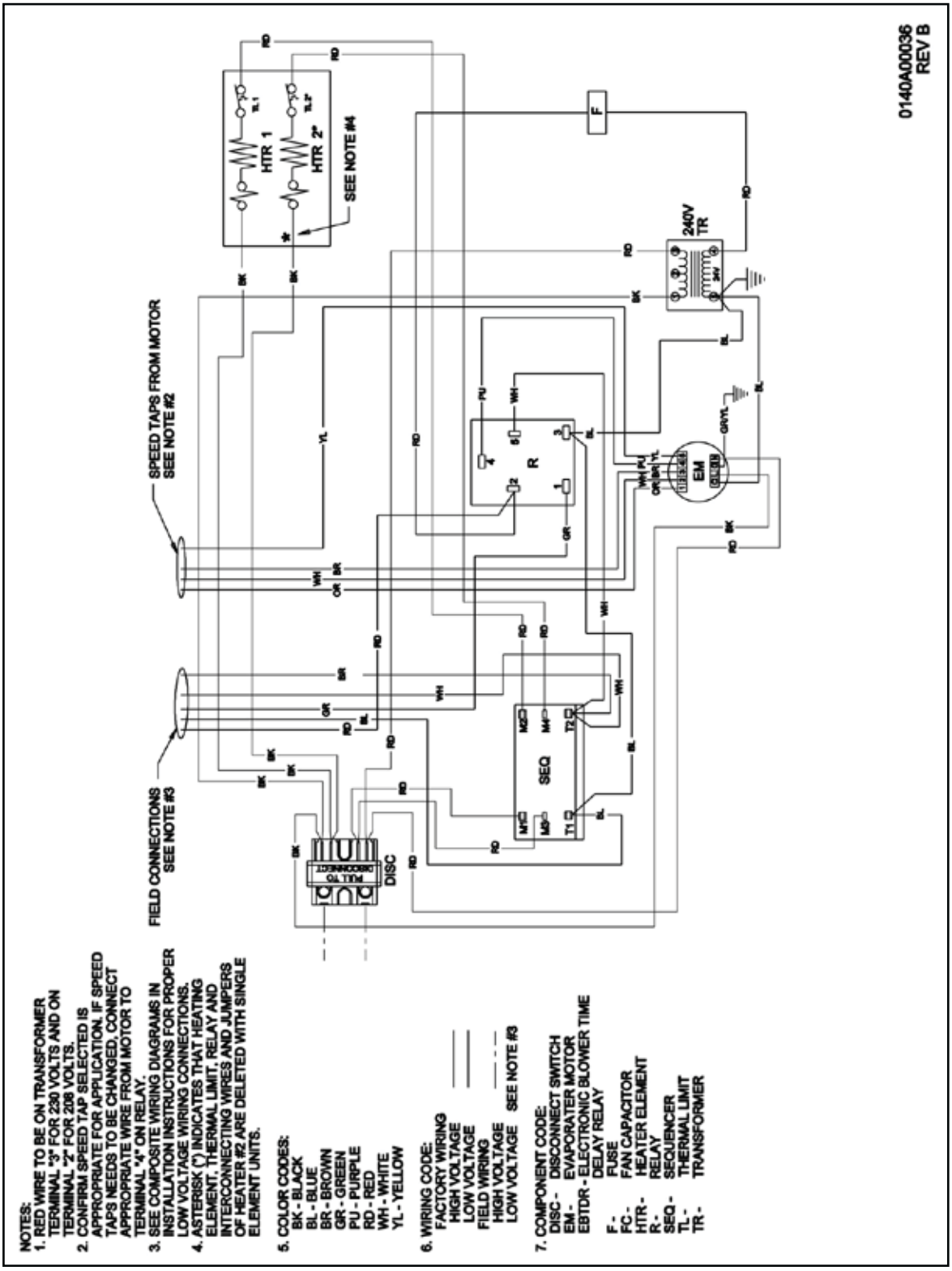

Warning

High Voltage: Disconnect all power before servicing or installing this unit. Multiple power sources may be present. Failure to do so may cause property damage, personal injury, or death.

Wiring is subject to change. Always refer to the wiring diagram or the unit for the most up-to-date wiring.

Notes

Goodman Manufacturing Company, L.P., reserves the right to discontinue, or change at any time, specifications or designs without notice or without incurring obligations. © 2013 • Goodman Manufacturing Company, L.P. • Houston, Texas • Printed in the USA.

UP TO **15 SEER PERFORMANCE**

Goodman®

Air Conditioning & Heating

SSZ14 HIGH-EFFICIENCY HEAT PUMP

Thank goodness for Goodman®

Goodman®
Air Conditioning & Heating

HIGH-EFFICIENCY PERFORMANCE

As the owner of a high-efficiency Goodman® brand SSZ14 R-410A Heat Pump, you have made one of the best purchasing decisions possible in the HVAC marketplace. At Goodman, we strive to build heating and air conditioning equipment that offers high performance, energy efficiency, durability, and an environment-complementing design – all at a price that will have you saying **"Thank goodness for Goodman.®"**

In particular, your Goodman brand SSZ14 Heat Pump will provide you with reliable cooling and money-saving energy efficiency levels as compared to lower SEER heat pump units.

COMFORT. SAVINGS. PERFORMANCE.

ENJOY THE COMFORT

You can count on your Goodman brand SSZ14 Heat Pump to keep you cool on even the hottest summer days and warm on the coldest days of winter. Your Goodman brand heat pump starts with a high-performance, high-efficiency compressor, which operates in tandem with our high-efficiency coil. The coil is made of rifled refrigeration-grade copper tubing and corrugated aluminum fins in a design that maximizes surface area. These high-quality components together cool your home effectively.

QUIET YOU CAN COUNT ON

We know that the last thing you want to hear at night is a noisy heat pump starting up. So we build our Goodman brand SSZ14 Heat Pumps with sound-dampening features that help ensure that your cooling system doesn't interfere with a good night's sleep. We rely on a quiet condenser fan system – a three-bladed fan and a unique louvered sound-control top – to reduce fan-related noise. Your Goodman brand SSZ14 Heat Pump will keep your home cool and comfortable, year after year.

Goodman's SMARTCOIL 5mm tube condensing coil design optimizes the heat transfer ability of R-410A refrigerant compared to standard 3/8"copper tubing.

SMARTCOIL™ TECHNOLOGY SMALLER IS SMARTER

Long ago the HVAC industry determined that the combination of copper tubing and aluminum fins provided the most efficient transfer of thermal heat available. Today, the Goodman brand has improved upon this industry standard by making the condenser coil copper tubing smaller and smarter. The result is a heat pump unit that can offer high efficiency, use less refrigerant, and deliver money-saving and energy-saving comfort to you for years and years.

R-410A REFRIGERANT

Compared to lower SEER, R-22 refrigerant units, your new Goodman brand SSZ14 heat pump system will not only provide you with money-saving cooling performance for many years, but it also features R-410A refrigerant. This refrigerant does not contain chlorine.

Introduced in 1995, R-410A refrigerant has helped increase the durability and reliability of heat pump compressors.

IMPRESSIVE FEATURES AND BENEFITS:

GOODMAN® BRAND SSZ14

R-410A HIGH-EFFICIENCY HEAT PUMP

- A high-performance, high-efficiency compressor
- Service valves with sweat connections and easy-access gauge ports
- Factory-installed, bi-flow liquid line filter drier
- SmartShift™ defrost technology with short-cycle protection
- 5mm SmartCoil™ condenser coil (on select models)
- Brass liquid and suction line service valves
- Copper tube/aluminum fin condenser coil
- Reliable time-initiated, temperature-terminated defrost control
- Contactor with lug connection
- Ground lug connection
- Louvered sound control top design

Talk to your Goodman brand dealer about opportunities to optimize the efficiency of your new unit.

WHY PAY MORE? BETTER VALUE ★★★★★ EXCEPTIONAL QUALITY

OUTSTANDING WARRANTY* PROTECTION

LIFETIME COMPRESSOR LIMITED WARRANTY*

10 YEAR PARTS LIMITED WARRANTY*

* Complete warranty details available from your local dealer or at www.goodmanmfg.com. To receive the Lifetime Compressor Limited Warranty (good for as long as you own your home) and 10-year Parts Limited Warranty, online registration must be completed within 60 days of installation. Online registration is not required in California or Quebec.

ADDITIONAL INFORMATION

Before purchasing this appliance, read important information about its estimated annual energy consumption, yearly operating cost, or energy efficiency rating that is available from your retailer.

Goodman®

Thank goodness for Goodman®

MODEL	COOLING EFFICIENCY SEER	LIMITED PARTS WARRANTY* COVERAGE			ComfortNet CONTROL SYSTEM COMPATIBLE	COMPRESSOR SOUND BLANKET	SMARTSHIFT™ TECHNOLOGY	FACTORY-INSTALLED FILTER DRIER
		10-Year Unit Replacement Limited Warranty*	Lifetime Compressor Limited Warranty*	10-Year Parts Limited Warranty*				
DSZC18	Up to 18	●	●	●	●	●	●	●
DSZC16	Up to 16	●	●	●	●	●	●	●
SSZ16	Up to 16		●	●		●	●	●
SSZ14	Up to 15		●	●		●	●	●
GSZ13	13			●				●

*Complete warranty details available from your local dealer or at www.goodmanmfg.com. To receive the 10-Year Unit Replacement Limited Warranty, Lifetime Compressor Limited Warranty (good for as long as you own your home) and 10-Year Parts Limited Warranty, online registration must be completed within 60 days of installation. Online registration is not required in California or Quebec.

GOODMAN – A MEMBER OF DAIKIN GROUP

Daikin Industries, Ltd. (DIL) is a Fortune 1000 company with more than 49,000 employees worldwide, making it the number one residential and commercial HVAC manufacturer in the world. Daikin is engaged primarily in the development, manufacture, sales and aftermarket support of heating, ventilation, air conditioning and refrigeration equipment, refrigerants and other chemicals, as well as oil hydraulic products. DIL is headquartered in Osaka, Japan, has manufacturing operations in 18 countries and a sales presence in more than 90 countries.

The company provides innovative, premium quality indoor climate management solutions to meet the changing needs of residential, commercial and industrial customers.

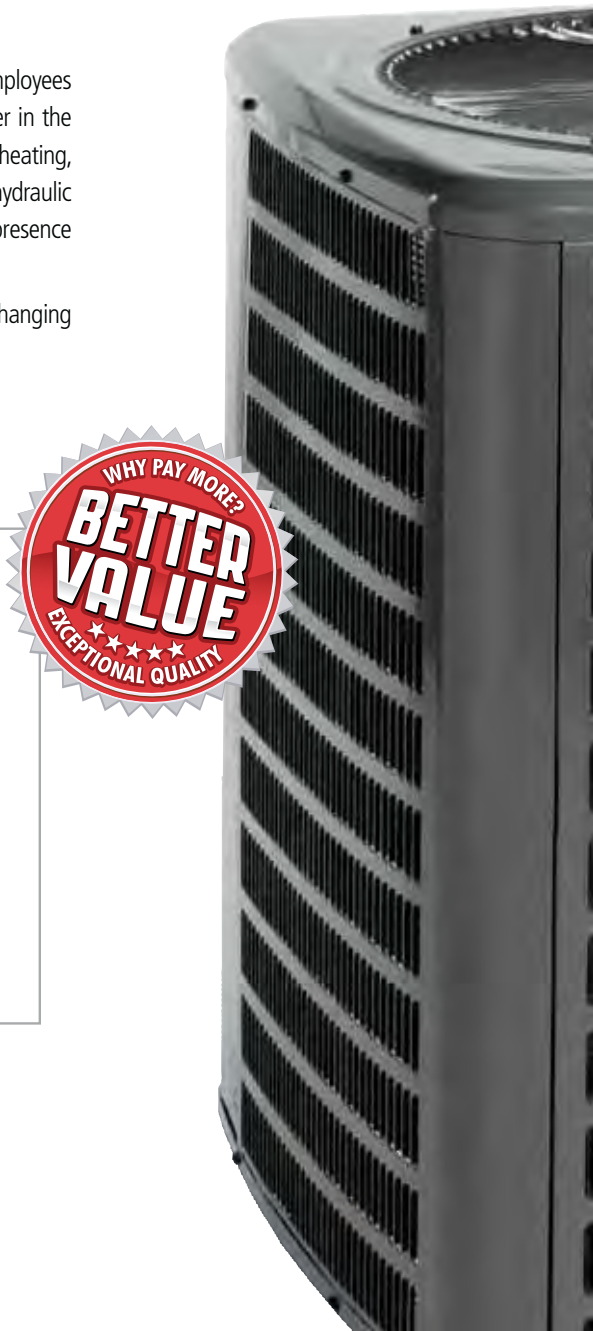

Goodman®
a member of DAIKIN group

Our continuing commitment to quality products may mean a change in specifications without notice.
© 2013 Goodman Manufacturing Company, L.P. · Houston, Texas, USA

www.goodmanmfg.com

BBB ACCREDITED BUSINESS

CB-SSZ14 02-13

EACH COND. UNIT
200LBS

DIMENSIONS - ENGLISH

UNIT	SERIES	ELECTRICAL CHARACTERISTICS				A	B	C	D	E	F	G	K	L	M	N	P	OPERATING WEIGHT (LBS)	SHIPPING WEIGHT (LBS)	SHIPPING DIMENSIONS (L x W x H)
CA13NA018	A	X	O	O	O	23 1/8"	24 13/16"	3 3/4"	3/4"	4 7/16"	18 1/16"	7 13/16"	2 13/16"	1/2"	12"	11 3/4"	11 7/8"	108	124	24 1/8" X 24 1/8" X 27 3/16"
CA13NA024	A	X	O	O	O	23 1/8"	24 13/16"	3 3/4"	3/4"	4 7/16"	18 1/16"	7 13/16"	2 13/16"	1/2"	12"	11 3/4"	11 7/8"	111	127	24 1/8" X 24 1/8" X 27 3/16"
CA13NA030	A	X	O	O	O	23 1/8"	28 7/16"	3 3/4"	3/4"	4 7/16"	18 1/16"	7 13/16"	2 13/16"	1/2"	12"	11 3/4"	12 1/2"	114	130	24 1/8" X 24 1/8" X 30 5/8"
CA13NA036	A	X	O	O	O	23 1/8"	35 3/16"	3 7/8"	7/8"	4 7/16"	18 1/16"	7 13/16"	2 13/16"	1/2"	12"	11 3/4"	13 3/4"	127	144	24 1/8" X 24 1/8" X 37 7/16"
CA13NA042	A	X	O	O	O	31 3/16"	31 13/16"	3 7/8"	7/8"	6 9/16"	24 11/16"	9 1/8"	2 15/16"	5/8"	16"	15 1/2"	13 3/4"	172	195	32 3/16" X 32 3/16" X 34"
CA13NA048	A	X	O	O	O	31 3/16"	35 3/16"	3 7/8"	7/8"	6 9/16"	24 11/16"	9 1/8"	2 15/16"	5/8"	16"	15 1/2"	14 1/2"	185	212	32 3/16" X 32 3/16" X 37 7/16"
CA13NA060	A	X	O	O	O	31 3/16"	28 7/16"	3 7/8"	7/8"	6 9/16"	24 11/16"	9 1/8"	2 15/16"	5/8"	16"	15 1/2"	12 3/4"	198	224	32 3/16" X 32 3/16" X 30 5/8"
		208-230-1-60	230-1-60	208/230-3-60	460-3-60															

X = YES
O = NO

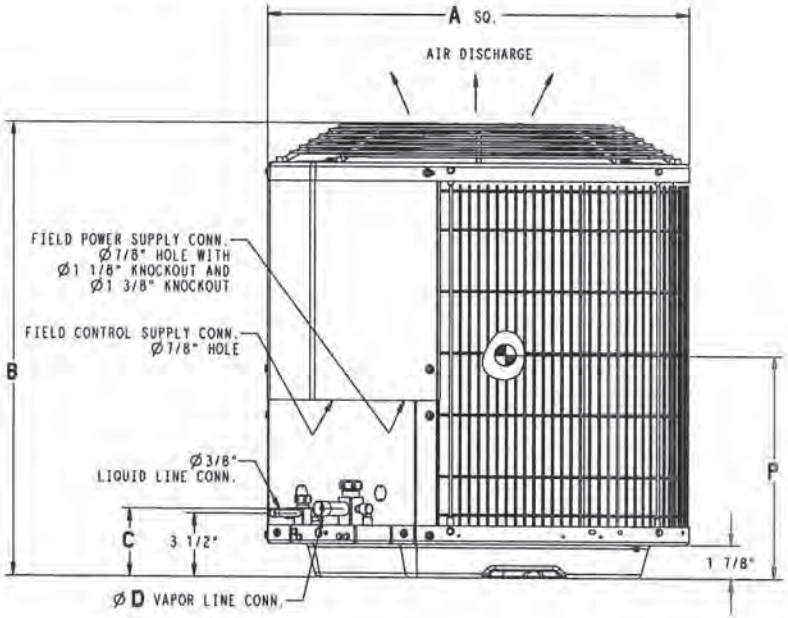

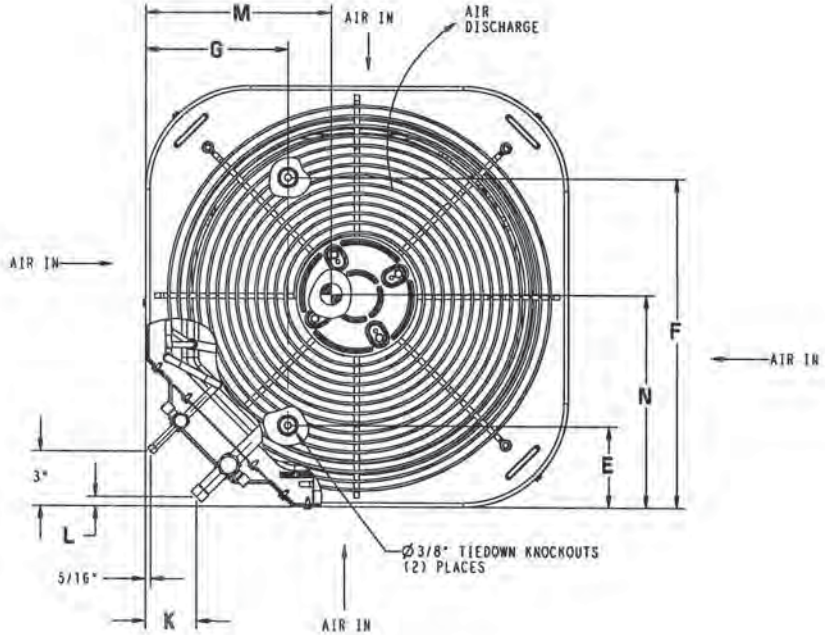

UNIT SIZE	MINIMUM MOUNTING PAD DIMENSIONS
18,24,30,36	23 1/2" X 23 1/2"
--	26" X 26"
42,48,60	31 1/2" X 31 1/2"
--	35" X 35"

CA13NA

Roof Downblast Exhaust
Belt & Direct Drive
GB-101HP • G-103HP

TRASH EXH.

GREENHECK
Building Value in Air.

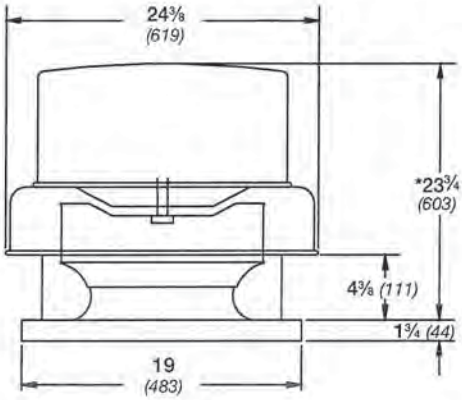

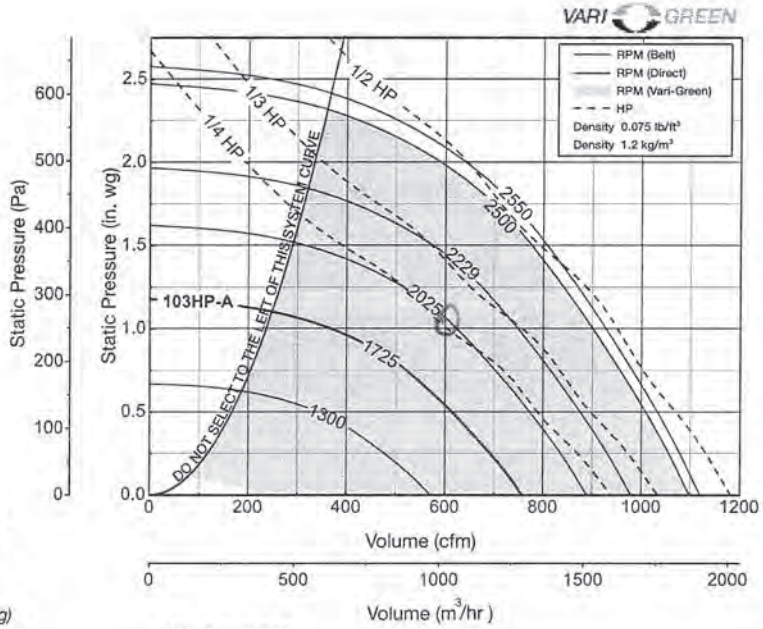

Damper Size = 12 x 12 *(305 x 305)*
Roof Opening = 14½ x 14½ *(368 x 368)*
Shroud Thickness = 0.051 *(1.3)*
Motor Cover Thickness = 0.040 *(1.0)*
Curb Cap Thickness = 0.064 *(1.6)*
^Approximate Unit Weight G/GB = 58/63 lbs. *(26/29 kg)*

100LBS EA

All dimensions in inches *(millimeters)*. *May be greater depending on motor. ^Weight shown is largest cataloged Open Drip-Proof motor.

Direct Drive RPM

A-1725 RPM	VG-2550 RPM

Motor HP Belt	Motor HP Direct		Fan RPM		Static Pressure in Inches wg 0	0.25	0.5	0.75	1	1.25	1.5	1.75	2	2.25
101HP	103HP													
1/4	VG-1/2		1300	CFM	571	477	342							
				BHP	0.06	0.06	0.07							
				Sones	6.6	5.7	5.3							
			1445	CFM	635	553	449	243						
				BHP	0.08	0.09	0.09	0.08						
				Sones	8.4	7.5	7	6.3						
			1590	CFM	699	626	537	417						
				BHP	0.10	0.11	0.12	0.12						
				Sones	10.4	9.5	9.1	8.3						
	VARI GREEN	A-1/4	1725	CFM	758	692	613	521	364					
				BHP	0.13	0.14	0.15	0.16	0.15					
				Sones	11.4	10.7	10.6	10.1	10					
			1880	CFM	826	767	697	618	518	337				
				BHP	0.17	0.18	0.19	0.20	0.20	0.18				
				Sones	12.7	12.2	11.9	12	11.4	11.9				
			2025	CFM	890	836	772	702	622	515	313			
				BHP	0.21	0.23	0.24	0.24	0.26	0.25	0.22			
				Sones	14.2	13.6	13.3	13.2	12.6	12	11.4			
1/3			2137	CFM	939	889	830	765	693	607	474			
				BHP	0.25	0.26	0.28	0.28	0.29	0.30	0.28			
				Sones	15.4	14.8	14.4	14.2	13.4	13.1	12.1			
			2229	CFM	979	931	875	814	748	674	574	406		
				BHP	0.28	0.30	0.31	0.32	0.33	0.35	0.33	0.31		
				Sones	15.8	15.4	14.8	14.5	14.1	13.7	13.2	12.0		
1/2			2336	CFM	1026	981	928	871	809	742	661	543	358	
				BHP	0.33	0.34	0.36	0.36	0.37	0.39	0.40	0.37	0.34	
				Sones	16.4	16	15.4	14.9	14.7	14	14.1	13.5	13.6	
			2500	CFM	1098	1056	1008	956	901	840	775	695	583	416
				BHP	0.40	0.42	0.43	0.45	0.45	0.46	0.48	0.48	0.46	0.42
				Sones	17.8	17.4	16.9	16.7	15.8	15.5	14.8	15.2	15.7	16.6
			2550	CFM	1120	1078	1032	982	928	869	807	735	639	497
				BHP	0.43	0.44	0.46	0.47	0.47	0.49	0.51	0.52	0.50	0.47
				Sones	18.2	17.9	17.4	17.2	16.3	16.1	15.1	15.6	16.2	17.2

MAXIMUM BHP AT A GIVEN RPM = $(RPM/3165)^3$
MAXIMUM RPM = 2550
TIP SPEED (ft/min) = RPM x 2.978
MAXIMUM MOTOR FRAME SIZE = 56

Performance certified is for installation type A: Free inlet, Free outlet. Power rating (BHP) does not include transmission losses. Performance ratings include the effects of a birdscreen. The sound ratings shown are loudness values in hemispherical sones at 5 ft. (1.5 m) in a hemispherical free field calculated per AMCA Standard 301. Values shown are for installation type A: free inlet hemispherical sone levels.

Roof Downblast - Exhaust
Belt & Direct Drive
GB-180 • G-183

FUTURE
TOILET EXH.

GREENHECK
Building Value in Air.

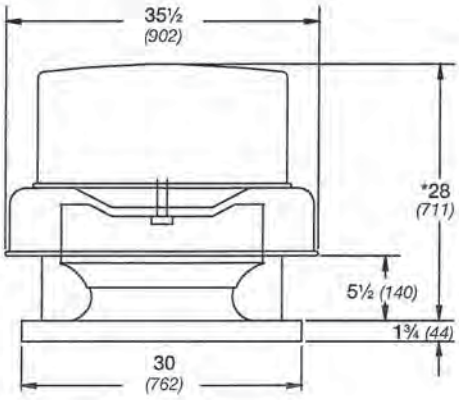

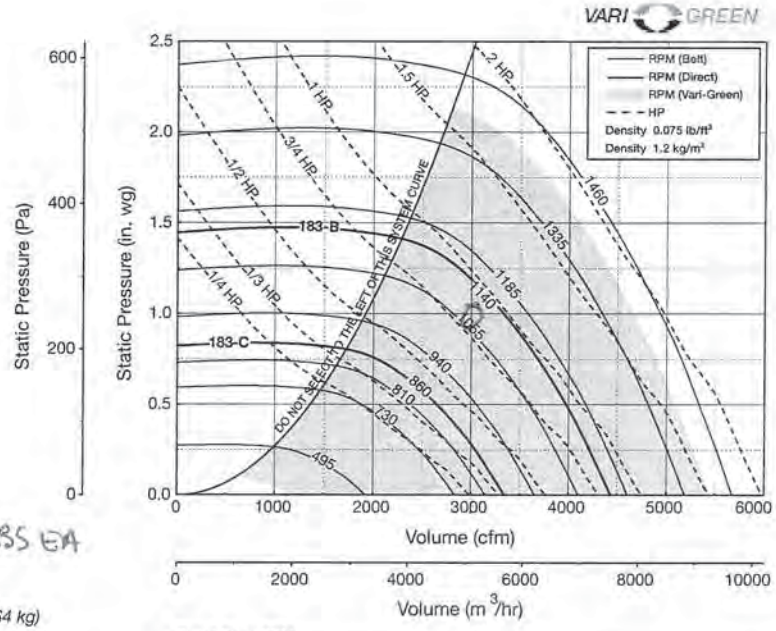

Damper Size = 18 x 18 *(457 x 457)*
Roof Opening = 20½ x 20½ *(521 x 521)*
Shroud Thickness = 0.064 *(1.6)*
Motor Cover Thickness = 0.040 *(1.0)*
Curb Cap Thickness = 0.064 *(1.6)*
^Approximate Unit Weight G/GB = 108/142 lbs. *(49/64 kg)*

-150LBS EA

All dimensions in inches *(millimeters)*. *May be greater depending on motor. ^Weight shown is largest cataloged Open Drip-Proof motor.

Direct Drive RPM

C-860 RPM	B-1140 RPM

Motor HP Belt	Motor HP Direct		Fan RPM		Static Pressure in Inches wg 0	0.125	0.25	0.5	0.75	1	1.25	1.5	1.75	2
180	183													
1/4	VG-1		730	CFM	2839	2668	2469	1882						
				BHP	0.21	0.23	0.25	0.25						
				Sones	7.4	8.7	7.2	6.7						
1/3			810	CFM	3150	2997	2832	2375						
				BHP	0.29	0.31	0.33	0.35						
				Sones	8.8	9.9	8.7	8.2						
1/2	VARI GREEN	C-1/2	860	CFM	3344	3202	3049	2647	2015					
				BHP	0.35	0.36	0.39	0.42	0.4					
				Sones	10.1	10.8	9.8	9.1	8.1					
			940	CFM	3655	3527	3388	3052	2601					
				BHP	0.46	0.47	0.49	0.54	0.54					
				Sones	12.7	12.8	12.0	11.1	10.3					
3/4			1000	CFM	3888	3769	3638	3339	2953	2387				
				BHP	0.55	0.57	0.58	0.64	0.66	0.63				
				Sones	15.2	14.7	13.7	13.0	11.9	11.1				
			1055	CFM	4102	3990	3867	3596	3252	2811				
				BHP	0.65	0.67	0.68	0.74	0.77	0.77				
				Sones	16.2	15.7	14.9	14.0	12.9	12.4				
1		B-1	1140	CFM	4433	4329	4216	3980	3684	3328	2856			
				BHP	0.81	0.84	0.85	0.93	0.96	0.98	0.95			
				Sones	17.9	17.4	16.8	16.0	15.1	14.3	13.6			
	VG-2		1185	CFM	4608	4508	4401	4179	3900	3575	3178	2499		
				BHP	0.91	0.94	0.96	1.03	1.07	1.1	1.09	0.99		
				Sones	19.0	18.4	17.8	17.1	16.2	15.4	14.7	13.7		
1½			1335	CFM	5191	5102	5010	4814	4599	4344	4052	3713	3262	
				BHP	1.31	1.33	1.36	1.41	1.49	1.54	1.57	1.56	1.51	
				Sones	22	22	21	21	19.9	19.2	18.7	18.2	17.6	
2			1400	CFM	5444	5359	5273	5086	4892	4655	4401	4097	3747	3253
				BHP	1.51	1.54	1.56	1.61	1.71	1.75	1.81	1.81	1.79	1.71
				Sones	24	23	23	22	22	21	21	20	19.7	19.2
			1460	CFM	5677	5596	5514	5336	5155	4938	4699	4426	4123	3765
				BHP	1.71	1.74	1.77	1.81	1.93	1.97	2.03	2.05	2.05	2.02
				Sones	26	25	24	24	23	23	22	22	22	21

MAXIMUM BHP AT A GIVEN RPM = $(RPM/1149)^3$
MAXIMUM RPM = 1460
TIP SPEED (ft/min) = RPM x 4.843
MAXIMUM MOTOR FRAME SIZE = 184T

Performance certified is for installation type A: Free inlet, Free outlet. Power rating (BHP) does not include transmission losses. Performance ratings include the effects of a birdscreen. The sound ratings shown are loudness values in hemispherical sones at 5 ft. (1.5 m) in a hemispherical free field calculated per AMCA Standard 301. Values shown are for installation type A: free inlet hemispherical sone levels.

FUTURE DISHWASH

SWB-116 - Belt Drive
Series 100

GREENHECK
Building Value in Air.

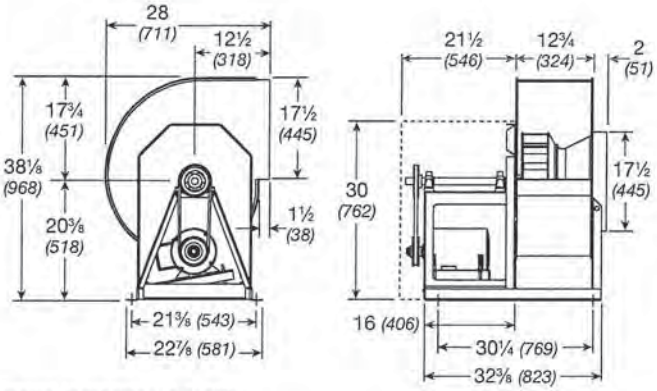

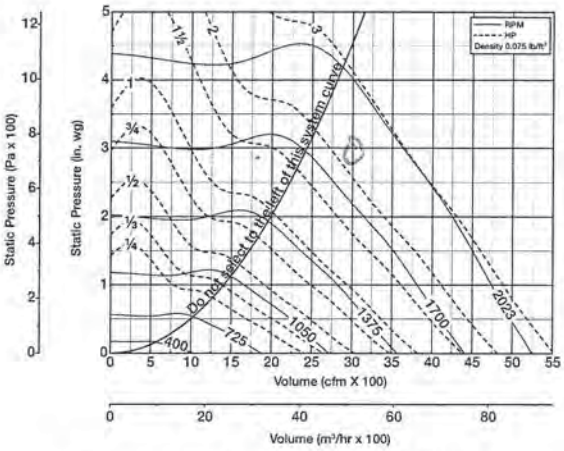

Wheel Diameter = 17 *(432)*
Shaft Diameter = 1 *(25)*
Outlet Area = 1.52 ft^2 *(0.14 m^2)*
^Approximate Unit Weight = 241 lb. *(109 kg)* ← 250 LBS EA

All dimensions in inches *(millimeters)*
For additional discharge positions see page 15
^Weight shown is largest cataloged Open Drip Proof motor

Maximum BHP at a given RPM = (RPM/1403)^3
(Maximum KW at a given RPM = (RPM/1547)^3)
Maximum RPM = 2023
Tip Speed (ft/min.) = RPM x 4.32
(Tip Speed (m/s) = RPM x 0.0219)
Maximum Motor Frame Size = 184T

SWB-116

CFM	OV		Static Pressure in Inches wg									
			0.5	0.75	1	1.25	1.5	2	2.5	2.75	3	3.5
1200	789	RPM	750									
		BHP	0.15									
		Sones	5.8									
1560	1026	RPM	846	943	1026							
		BHP	0.22	0.30	0.38							
		Sones	7.1	7.8	8.7							
1920	1263	RPM	949	1039	1120	1192	1259					
		BHP	0.31	0.40	0.50	0.60	0.71					
		Sones	8.8	9.6	10.7	11.5	12.0					
2280	1500	RPM	1061	1141	1216	1287	1352	1470	1576			
		BHP	0.42	0.53	0.65	0.76	0.88	1.12	1.38			
		Sones	10.9	11.8	12.5	12.9	13.3	14.4	16.4			
2640	1737	RPM	1182	1250	1320	1385	1448	1564	1666	1715	1762	1851
		BHP	0.57	0.69	0.82	0.96	1.09	1.36	1.64	1.79	1.93	2.23
		Sones	13.5	13.8	14.1	14.6	15.1	15.9	17.4	18.4	19.5	22
3000	1974	RPM	1306	1369	1429	1490	1548	1659	1761	1808	1853	1940
		BHP	0.76	0.89	1.03	1.18	1.34	1.64	1.95	2.11	2.26	2.59
		Sones	15.4	15.8	16.1	16.6	17.1	18.6	19.9	21	21	22
3360	2211	RPM	1432	1491	1545	1599	1654	1758	1857	1903	1948	
		BHP	0.99	1.14	1.29	1.45	1.62	1.96	2.30	2.47	2.64	
		Sones	17.6	18.0	18.4	18.9	19.6	21	23	23	23	
3720	2447	RPM	1560	1615	1667	1716	1764	1863	1955	2001		
		BHP	1.27	1.43	1.60	1.76	1.94	2.32	2.70	2.89		
		Sones	20	21	21	22	23	24	25	26		
4080	2684	RPM	1690	1742	1790	1837	1881	1971				
		BHP	1.60	1.78	1.96	2.14	2.32	2.72				
		Sones	23	24	25	25	26	27				
4440	2921	RPM	1821	1869	1916	1960	2002					
		BHP	1.99	2.18	2.38	2.58	2.77					
		Sones	27	28	28	29	30					
4800	3158	RPM	1953	1999								
		BHP	2.44	2.65								
		Sones	32	32								

Performance certified is for installation Type B - Free inlet, Ducted outlet. Power rating (Bhp) does not include transmission losses. Performance ratings do not include the effects of appurtenances (accessories). The AMCA Certified Ratings Seal applies to air performance only.

SWB-218 - Belt Drive
Series 200

FUTURE GREASE EXHAUST

GREENHECK
Building Value in Air.

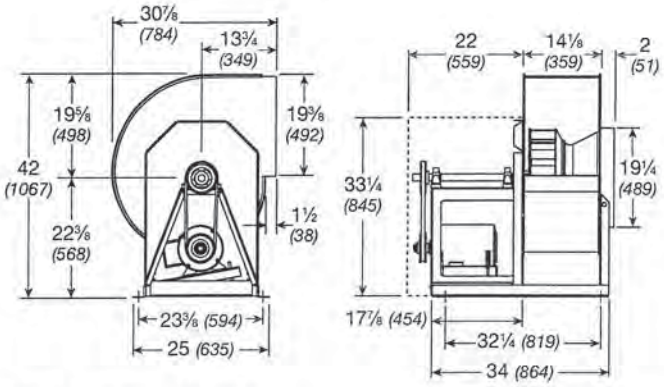

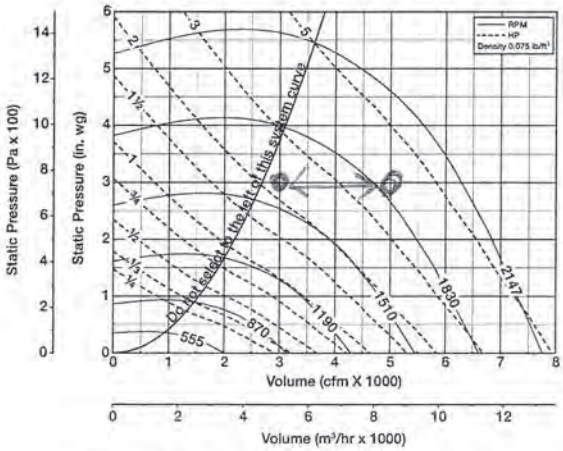

Wheel Diameter = 18⅝ *(473)*
Shaft Diameter = 1¼ *(32)*
Outlet Area = 1.87 ft² *(0.17 m²)*
^Approximate Unit Weight = 324 lb. *(147 kg)* ← 352LBS

All dimensions in inches *(millimeters)*
For additional discharge positions see page 15
^Weight shown is largest cataloged Open Drip Proof motor

Maximum BHP at a given RPM = $(RPM/1196)^3$
(Maximum KW at a given RPM = $(RPM/1319)^3$)
Maximum RPM = 2147
Tip Speed (ft/min.) = RPM x 4.78
(Tip Speed (m/s) = RPM x 0.0243)
Maximum Motor Frame Size = 213T

SWB-218

CFM	OV		Static Pressure in Inches wg									
			0.5	1	1.5	2	2.5	3	3.5	4	4.5	5
2000	1070	RPM	762	963	1136							
		BHP	0.26	0.49	0.75							
		Sones	10.1	11.3	13.4							
2500	1337	RPM	862	1023	1185	1330	1459					
		BHP	0.37	0.62	0.92	1.24	1.58					
		Sones	10.1	11.6	13.0	15.2	17.9					
3000	1604	RPM	974	1110	1245	1380	1507	1623	1730			
		BHP	0.52	0.80	1.12	1.47	1.85	2.24	2.65			
		Sones	11.5	12.6	13.9	15.5	18.3	21	24			
3500	1872	RPM	1092	1211	1327	1443	1557	1672	1779	1878	1971	2060
		BHP	0.72	1.03	1.36	1.74	2.15	2.58	3.02	3.48	3.95	4.43
		Sones	13.6	14.2	15.2	16.8	19.1	22	25	27	29	31
4000	2139	RPM	1218	1322	1423	1525	1626	1727	1828	1927	2020	2108
		BHP	0.97	1.32	1.68	2.07	2.51	2.95	3.43	3.93	4.44	4.96
		Sones	15.7	16.4	17.3	18.7	21	23	25	27	29	32
4500	2406	RPM	1346	1438	1530	1619	1709	1800	1890	1979	2069	
		BHP	1.28	1.66	2.07	2.48	2.92	3.41	3.90	4.42	4.96	
		Sones	18.2	18.8	19.6	21	23	24	26	28	30	
5000	2764	RPM	1475	1557	1643	1723	1804	1885	1967	2048		
		BHP	1.66	2.08	2.52	2.97	3.43	3.91	4.45	5.00		
		Sones	21	21	22	24	25	26	28	29		
5500	2941	RPM	1605	1683	1758	1834	1907	1981	2055			
		BHP	2.10	2.58	3.04	3.54	4.03	4.54	5.07			
		Sones	24	24	25	26	27	28	30			
6000	3209	RPM	1737	1810	1877	1949	2017	2084				
		BHP	2.63	3.15	3.65	4.18	4.72	5.25				
		Sones	27	28	28	29	30	31				
6500	3476	RPM	1869	1938	2002	2065	2131					
		BHP	3.26	3.81	4.37	4.91	5.49					
		Sones	31	31	31	32	33					
7000	3743	RPM	2003	2067	2128							
		BHP	3.98	4.57	5.18							
		Sones	34	35	35							

Performance certified is for installation Type B - Free inlet, Ducted outlet. Power rating (Bhp) does not include transmission losses. Performance ratings do not include the effects of appurtenances (accessories). The AMCA Certified Ratings Seal applies to air performance only.

Typical Installations

GREENHECK
Building Value in Air.

General Clean Air or Fume Hood (Non-Grease)

The SFD, SFB, SWD and SWB are designed for applications ranging from clean air to contaminated air. Typical installations are shown below. Installations must include a means for inspecting, cleaning and servicing the exhaust fan.

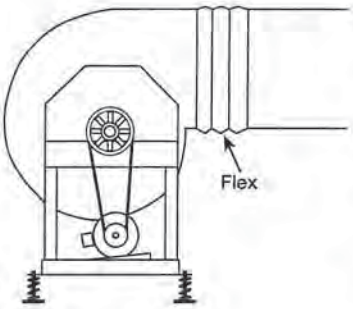

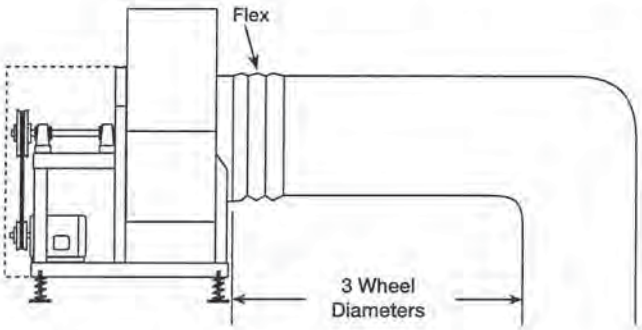

UL 762 KITCHEN EXHAUST

SWB Commercial Kitchen (Grease)

Greenheck's SWB Series 200 and 300 are designed to meet restaurant and foodservice applications. These fans are UL and cUL Listed for grease removal and have been tested under elevated temperature conditions.

Due to high temperatures and grease-laden airstreams in commercial kitchen ventilation, system designers must be aware of governing codes and guidelines. The National Fire Protection Association (NFPA) is the primary source used by many local codes for commercial kitchen ventilation systems. Local code authorities should be consulted before proceeding with any kitchen ventilation project.

Installation must include a means for inspecting, cleaning and servicing the exhaust fan.

Fans selected for grease removal must include a weatherhood, access door and 1-inch *(25 mm)* drain connection. For grease applications where the fan is mounted indoors, the welded scroll option must be selected. An outlet guard is strongly recommended when the fan discharge is accessible. When an outlet guard is not ordered with the fan, it must be provided by the installer. An upblast discharge is recommended. No dampers are to be used in the system.

The fan discharge must be a minimum of 40 inches *(1016 mm)* above the roof line and the exhaust duct must be fully welded to a minimum distance of 18 inches *(457 mm)* above the roof surface.

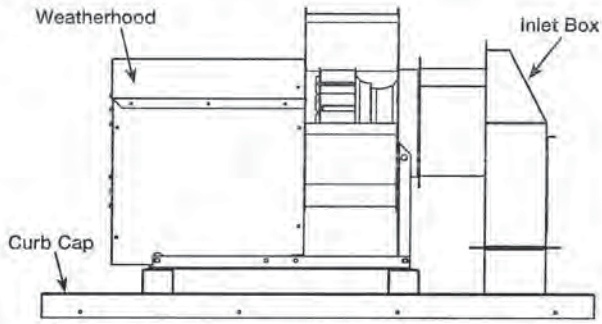

Inlet box and curb cap are used when space is limited and a 90° turn is required less than 3 wheel diameters from the inlet.

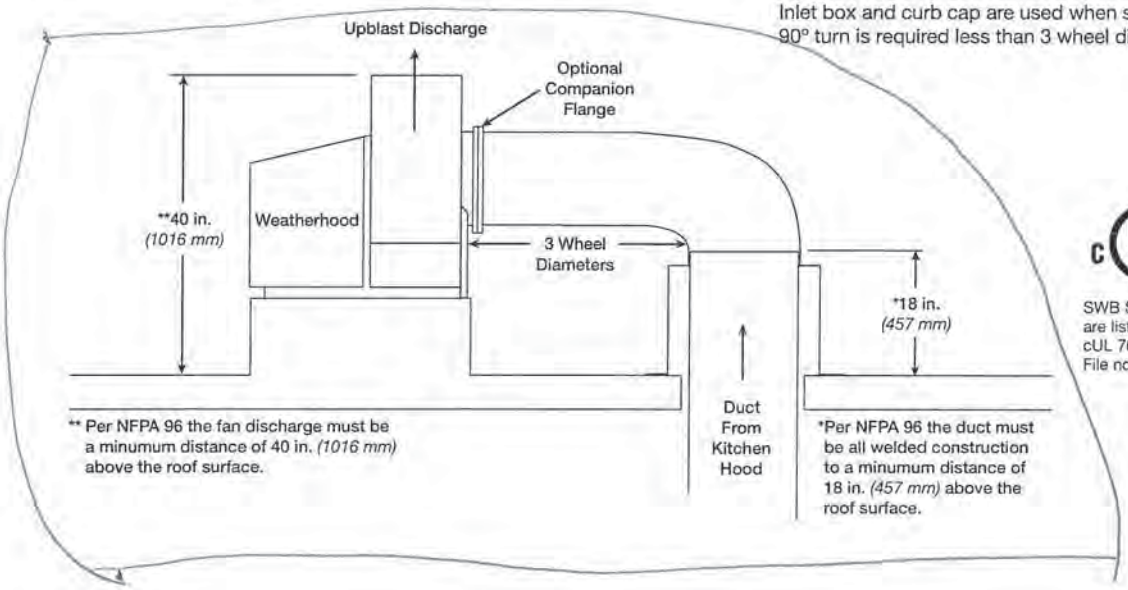

c UL US LISTED

SWB Series 200 and 300 models are listed for grease removal (UL/cUL 762).
File no. MH11745

Mounting Options

GREENHECK
Building Value in Air.

Vibration Isolators

Base-mounted neoprene or spring isolators are available to lessen mechanical vibration and assure quiet operation. Free-standing, restrained and housed spring isolators are also available. Isolators are sized to match the weight of each fan.

Free-Standing Open Spring Mounts -

Type 3, 1-inch Deflection
Free-standing spring isolators are unhoused laterally stable steel springs. They provide a minimum horizontal stiffness of 0.8 times the rated vertical stiffness and provide an additional 50% overload capacity. These isolators are equipped with a top-mounted adjusting bolt and an acoustical non-skid base. Springs are color coded to indicate load capacity.

Housed Spring Mounts

Type 4B, 1-inch Deflection
Housed spring isolators consist of steel springs assembled into a telescoping housing with a top-mounted adjusting bolt and an acoustical non-skid base. Housed spring isolators include resilient inserts to prevent metal-to-metal contact and provide snubbing for side loads. Springs provide an additional 50% overload capacity and are color coded to indicate load capacity.

Rubber Mounts -

Type 2, ¼-inch and ½-inch Deflection
Neoprene mountings consist of a steel top plate and base plate completely embedded in colored (oil-resistant) neoprene for easy identification of capacity. Neoprene mountings are furnished with a tapped hole in the center. This enables the equipment to be bolted securely to the rubber mount.

Restrained Spring Mounts -

Type 4A, 1-inch Deflection
Restrained spring isolators consist of laterally stable, free-standing springs assembled into a steel housing. These assemblies are designed for vertical and horizontal motion restraint. Restrained spring isolators can be used for blocking during equipment installation and are provided with leveling bolts. Springs provide 50% overload capacity and are color coded or identified to indicate load capacity. Restrained spring mounts are recommended for equipment subject to wind loading or large torquing forces.

Direct Mount - Type A

No base required. Isolators are attached directly to equipment. Direct isolation can be used if equipment is unitary and rigid without the use of additional support. If there is any doubt whether or not equipment can be supported directly on isolators, use rails, bases or consult the factory.

Mounting Rails

with Isolators
Isolation mounting rails are available with either rubber mount, free-standing open or restrained spring isolators. The isolators are mounted between aluminum rails that run the length of the fan base. Isolation rails provide easy installation on isolated systems, and are ideal for applications where there is a large overhung load. Mounting rails are available for fans up to size 36.

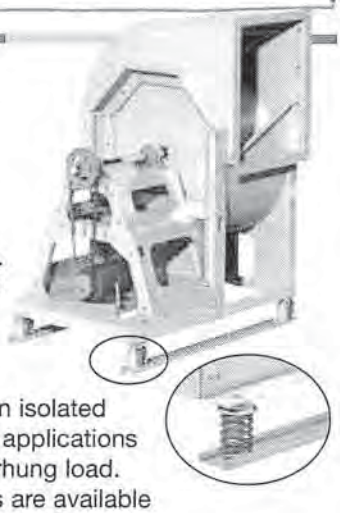

Equipment Supports

Models GESS and GESR equipment supports are available for roof mounting of utility fans up to size 36. Equipment supports are available in a number of lengths, widths, heights, and can also be built for a pitched roof.

FUTURE REST. MUA UNIT

AAON **RN SERIES ROOFTOP UNITS** CONTINUE TO LEAD THE PACKAGED ROOFTOP EQUIPMENT INDUSTRY IN PERFORMANCE AND SERVICEABILITY. DOUBLE WALL RIGID POLYURETHANE FOAM INSULATED CABINET CONSTRUCTION AND DIRECT DRIVE BACKWARD CURVED PLENUM FANS ALLOW RN SERIES UNITS TO HAVE QUIET, ENERGY EFFICIENT AIR FLOW WITH HIGH STATIC PRESSURE CAPABILITIES. RN SERIES UNITS ALSO FEATURE LOCKABLE HINGED DOORS WHICH PROVIDE SERVICE ACCESS TO ALL SECTIONS OF THE UNIT.

Applications

- Air-cooled condenser or air-source heat pump packaged DX rooftop units, 6-140 tons.
- Water-cooled condenser, water-source heat pump, or geothermal heat pump configurations.
- Chilled water or non-compressorized DX air handling units, 1,100-55,500 cfm.
- Makeup air capability, up to 100% outside air, to meet ventilation requirements.
- High performance hot water, steam, electric, and gas heating.
- Variable capacity and variable speed R-410A scroll compressors for load matching cooling and improved part load efficiency.

▲ 26 & 31 - 70 ton RN Series Air-Cooled Condenser Packaged Rooftop Unit.

APPROX. 6,000 LBS

Construction

- Two-inch double wall rigid polyurethane foam panel cabinet construction has a thermal resistance of R-13 or greater, which exceeds the R-value of a cabinet with four-inch thick fiberglass construction. Panels include a thermal break, with no metal contact from inside to outside, to prevent heat transfer through the panel and prevent condensation on the outside of the cabinet. The inner wall protects the insulation from moisture damage, prevents microbial growth, and is easy to clean. This type of construction also makes the cabinet more rigid and resistant to damage, provides increased sound dampening, and reduces air leakage and infiltration.

Don't see the specific product you need?
AAON can meet your requirements with Custom Equipment designed specifically for your exact application and job specifications.
Visit www.aaon.com or call 918.583.2266 to locate a representative near you.

▲ Cutaway of panel showing thermal break and foam core.

- Access doors with full length stainless steel piano hinges and quarter turn lockable handles provide improved reliability over single point hinges and make the unit easily serviceable.
- Corrosion resistant exterior polyurethane paint exceeds a 2,500 hour salt spray test.
- Double sloped stainless steel drain pans eliminate standing water which can support microbial growth and stainless steel construction prevents corrosion that could lead to water leaks and contaminants in the air stream.

RN Model	Cabinet	Nominal cfm	Width	Height*	Length*
RN-006	A	2,200	79	44	82
RN-007		2,500			
RN-008		2,800			
RN-010		3,400			
RN-009	B	4,000	96	50	88
RN-011		4,600			
RN-013		5,200			
RN-015		5,800			
RN-016	C	4,800	101	59	110
RN-018		5,400			
RN-020		6,000			
RN-025		7,500			
RN-030		9,000			
RN-026	D	8,600	100	97	155
RN-031		10,100			
RN-040		12,800			
RN-050		15,000			
RN-060		18,000	8'4"	8'-1"	12'-11"
RN-070		21,000			
RN-055	E	21,000	142	+ 18" WRB 9'-7" TALL	241
RN-065		24,000			
RN-075		27,000			
RN-090		22,000		102	
RN-105		26,500			
RN-120		31,000			303
RN-130		34,000			
RN-140		37,000			

**Dimensions may vary depending on options selected.*
All dimensions are in inches.
Design cfm may be 30-50% greater or less than nominal cfm.

▼ 55, 65 and 75-140 ton RN Series Air-Cooled Condenser Packaged Rooftop Unit with Microchannel Condensor Coils.

◀ Microchannel condenser coils are more efficient, lighter, and use less refrigerant than traditional fin and tube condenser coils.

TYP. CORRIDOR UNIT
(UP TO 5TONS)

900LBS

Figure 13. Cooling and gas/electric - 4-5 tons high efficiency - horizontal airflow supply and return

Note: All dimensions are in inches/millimeters.

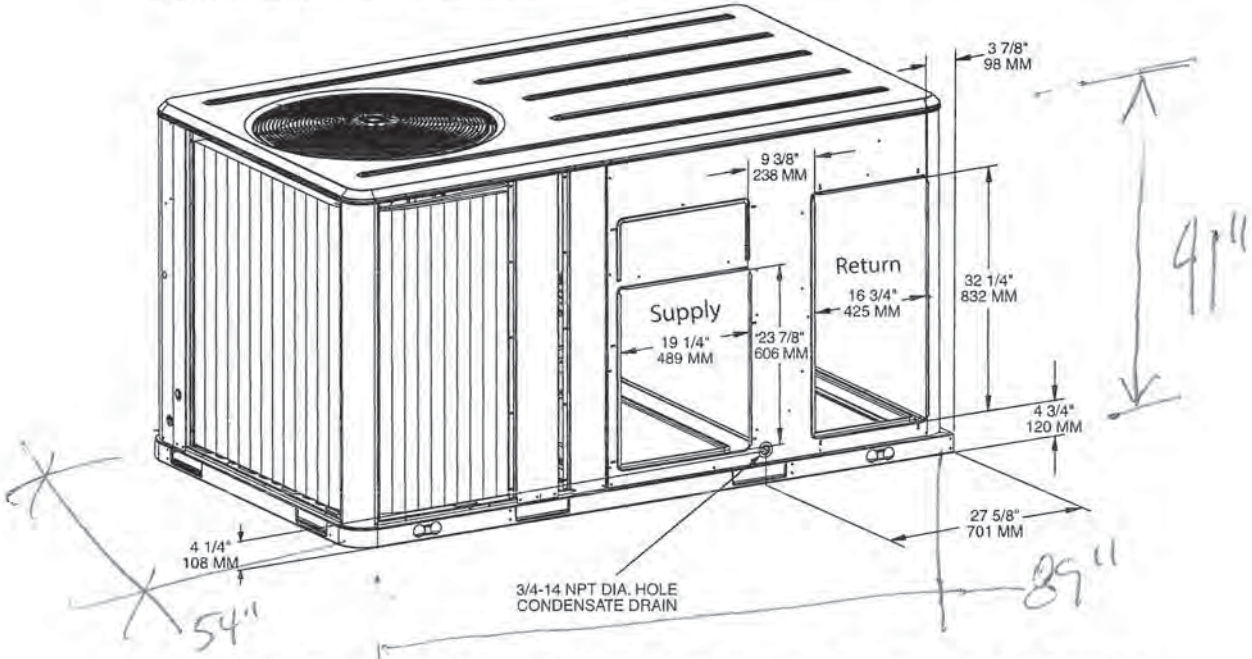

Figure 14. Cooling and gas/electric - 4-5 tons high efficiency - unit clearance and roof opening

Note: All dimensions are in inches/millimeters.

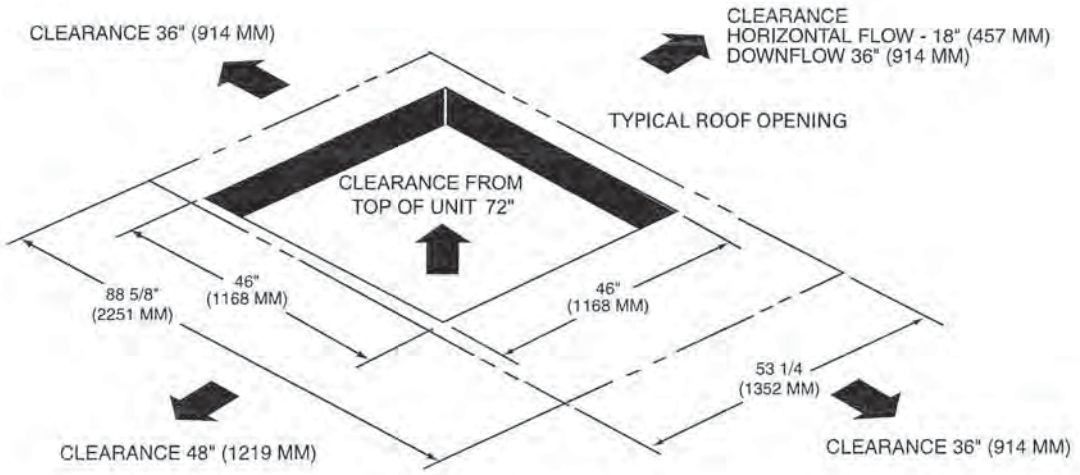

Figure 15. Cooling and gas/electric - 4-5 tons high efficiency - roof curb

Note: All dimensions are in inches/millimeters.

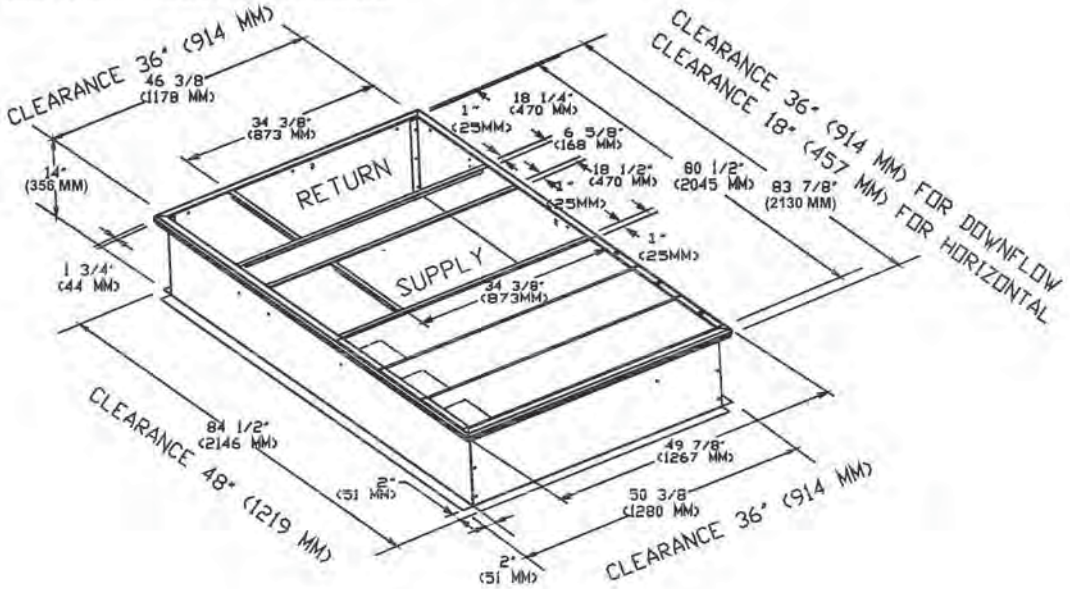

Figure 16. Cooling and gas/electric - 4-5 tons high efficiency - downflow duct connections field fabricated

Note: All dimensions are in inches/millimeters.
Note: See "Clearance required from duct to combustible surfaces (inches)," p. 18 for duct clearance to combustible materials.

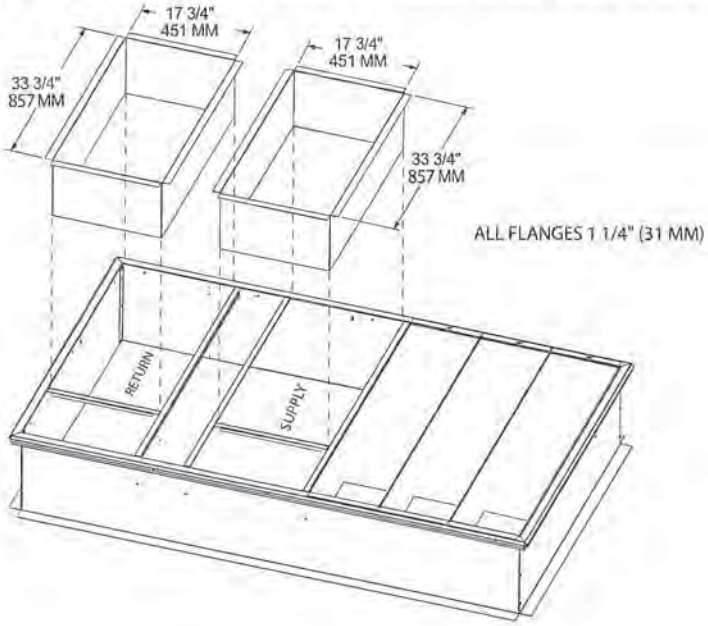

Dimensional Data

Figure 17. Cooling and gas/electric - 4-5 tons high efficiency - economizer, manual or motorized fresh air damper

Note: All dimensions are in inches/millimeters.

Figure 18. Cooling and gas/electric - 4-5 tons high efficiency - swing diameter for hinged door(s) option

Note: All dimensions are in inches/millimeters.

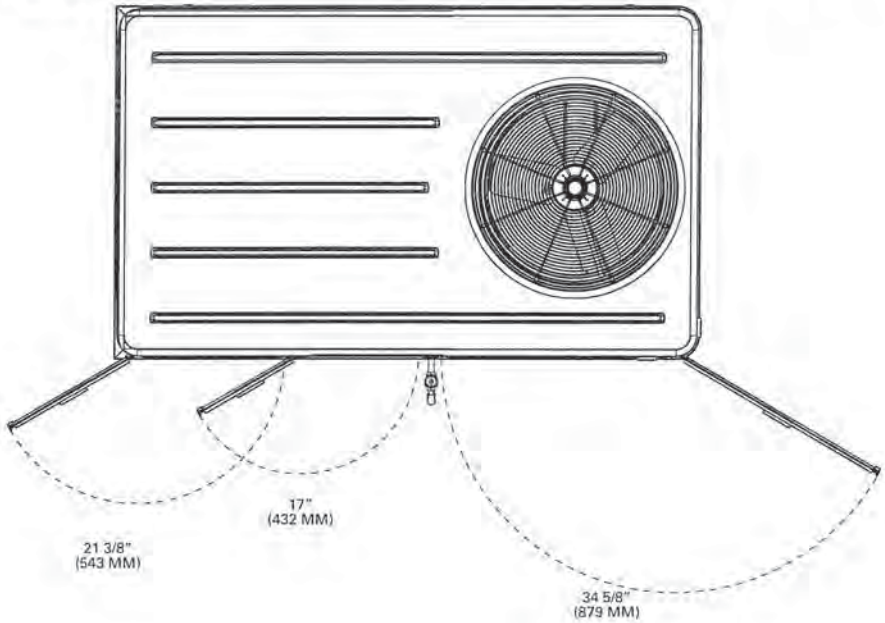

Weights

Table 30. Maximum unit & corner weights (lbs) and center of gravity dimensions (in.) - cooling models

Unit		Maximum Model Weights[a]		Corner Weights[b]				Center of Gravity (in.)	
Tons	Model No.	Shipping	Net	A	B	C	D	Length	Width
3	THC037E	614	544	163	144	111	125	33	19
4	THC047E	787	692	220	178	132	163	40	23
5	THC067E	841	746	241	193	139	173	39	22

(a) Weights are approximate.
(b) Corner weights are given for information only.

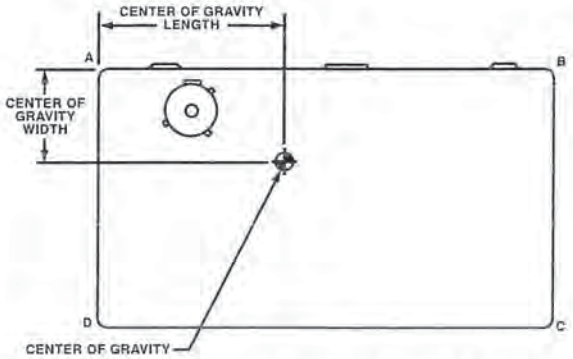

Table 31. Maximum unit & corner weights (lbs) and center of gravity dimensions (in.) - gas/electric models

Unit		Maximum Model Weights[a]		Corner Weights[b]				Center of Gravity (in.)	
Tons	Model No.	Shipping	Net	A	B	C	D	Length	Width
3	YHC037E	676	606	178	162	126	139	33	19
4	YHC047E	858	763	238	200	148	176	40	23
5	YHC067E	917	822	261	218	156	187	40	22

(a) Weights are approximate.
(b) Corner weights are given for information only.

Table 32. Factory installed options (fiops)/accessory net weights (lbs)[a],[b]

	T/YHC037E Net Weight	T/YHC047E-067E Net Weight
Accessory	3 Tons	4-5 Tons
460V/575V IDM Transformer[c]	29	29
Barometric Relief	7	10
Belt Drive Option (3 phase only)	31	31
Coil Guards	12	20
Economizer	26	36
Electric Heaters[d]	15	30
Hinged Doors	10	12
Low Leak Economizer	68	93
Manual Outside Air Damper	16	26
Motorized Outside Air Damper	20	30

continued on next page

Weights

Table 32. Factory installed options (fiops)/accessory net weights (lbs)[a],[b] (continued)

Accessory	T/YHC037E Net Weight 3 Tons	T/YHC047E-067E Net Weight 4-5 Tons
Novar Control	8	8
Oversized Motor	5	8
Powered Convenience Outlet	38	38
Powered Exhaust	40	40
Reheat Coil	12	14
Roof Curb	61	78
Smoke Detector, Supply	5	5
Smoke Detector, Return	7	7
Stainless Steel Heat Exchanger[e]	4	6
Through the Base Electrical	8	13
Through the Base Gas	5	5
Unit Mounted Circuit Breaker	5	5
Unit Mounted Disconnect	5	5

(a) Weights for options not listed are <5 lbs.
(b) Net weight should be added to unit weight when ordering factory-installed accessories.
(c) Apply weight with all 460V/575V units.
(d) Applicable to Cooling units only.
(e) Applicable to Gas/Electric units only.

EACH COND. UNIT
200LBS

DIMENSIONS - ENGLISH

UNIT	SERIES	ELECTRICAL CHARACTERISTICS				A	B	C	D	E	F	G	K	L	M	N	P	OPERATING WEIGHT (LBS)	SHIPPING WEIGHT (LBS)	SHIPPING DIMENSIONS (L x W x H)
CA13NA018	A	X	O	O	O	23 1/8"	24 13/16"	3 3/4"	3/4"	4 7/16"	18 1/16"	7 13/16"	2 13/16"	1/2"	12"	11 3/4"	11 7/8"	108	124	24 1/8" X 24 1/8" X 27 3/16"
CA13NA024	A	X	O	O	O	23 1/8"	24 13/16"	3 3/4"	3/4"	4 7/16"	18 1/16"	7 13/16"	2 13/16"	1/2"	12"	11 3/4"	11 7/8"	111	127	24 1/8" X 24 1/8" X 27 3/16"
CA13NA030	A	X	O	O	O	23 1/8"	28 7/16"	3 3/4"	3/4"	4 7/16"	18 1/16"	7 13/16"	2 13/16"	1/2"	12"	11 3/4"	12 1/2"	114	130	24 1/8" X 24 1/8" X 30 5/8"
CA13NA036	A	X	O	O	O	23 1/8"	35 3/16"	3 7/8"	7/8"	4 7/16"	18 1/16"	7 13/16"	2 13/16"	1/2"	12"	11 3/4"	13 3/4"	127	144	24 1/8" X 24 1/8" X 37 7/16"
CA13NA042	A	X	O	O	O	31 3/16"	31 13/16"	3 7/8"	7/8"	6 9/16"	24 11/16"	9 1/8"	2 15/16"	5/8"	16"	15 1/2"	13 3/4"	172	195	32 3/16" X 32 3/16" X 34"
CA13NA048	A	X	O	O	O	31 3/16"	35 3/16"	3 7/8"	7/8"	6 9/16"	24 11/16"	9 1/8"	2 15/16"	5/8"	16"	15 1/2"	14 1/2"	185	212	32 3/16" X 32 3/16" X 37 7/16"
CA13NA060	A	X	O	O	O	31 3/16"	28 7/16"	3 7/8"	7/8"	6 9/16"	24 11/16"	9 1/8"	2 15/16"	5/8"	16"	15 1/2"	12 3/4"	198	224	32 3/16" X 32 3/16" X 30 5/8"
		208-230-1-60	230-1-60	208/230-3-60	460-3-60															

X = YES
O = NO

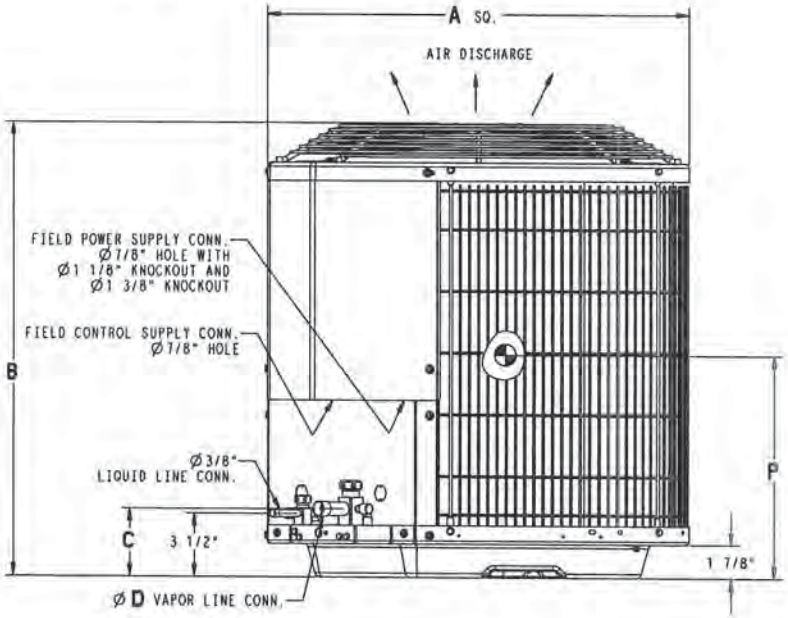

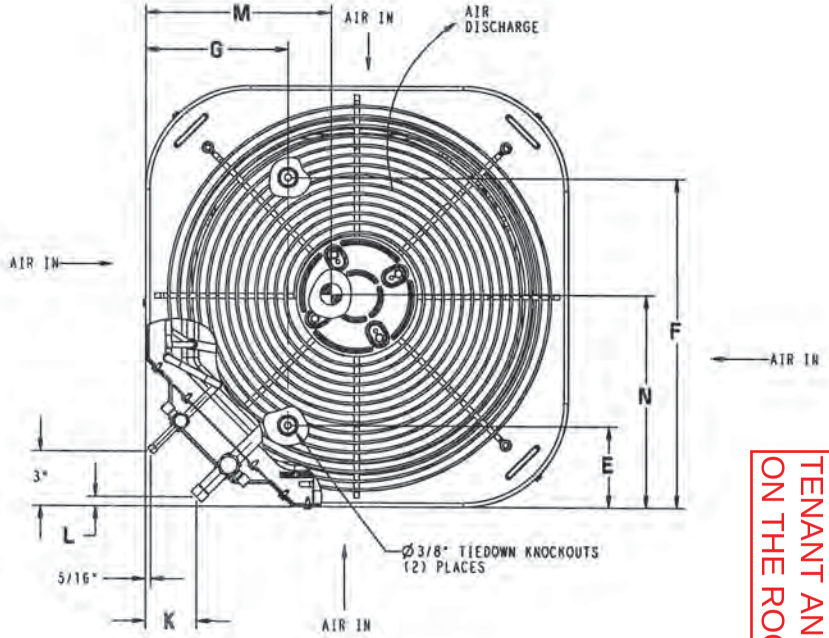

UNIT SIZE	MINIMUM MOUNTING PAD DIMENSIONS
18,24,30,36	23 1/2" X 23 1/2"
--	26" X 26"
42,48,60	31 1/2" X 31 1/2"
--	35" X 35"

C1, C2 AND C3
TYPICAL CONDENSING
UNIT THAT WILL BE
PROVIDE BY THE
TENANT AND PLACED
ON THE ROOF

CA13NA

Roof Downblast Exhaust
Belt & Direct Drive
GB-101HP • G-103HP

TRASH EXH.

GREENHECK
Building Value in Air.

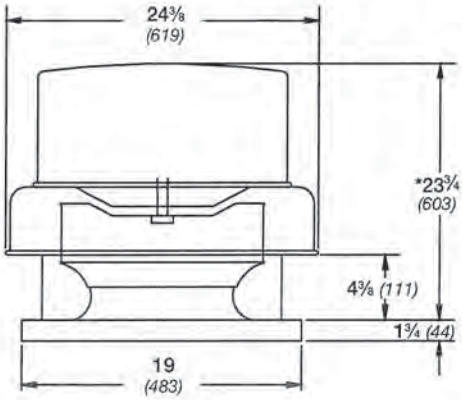

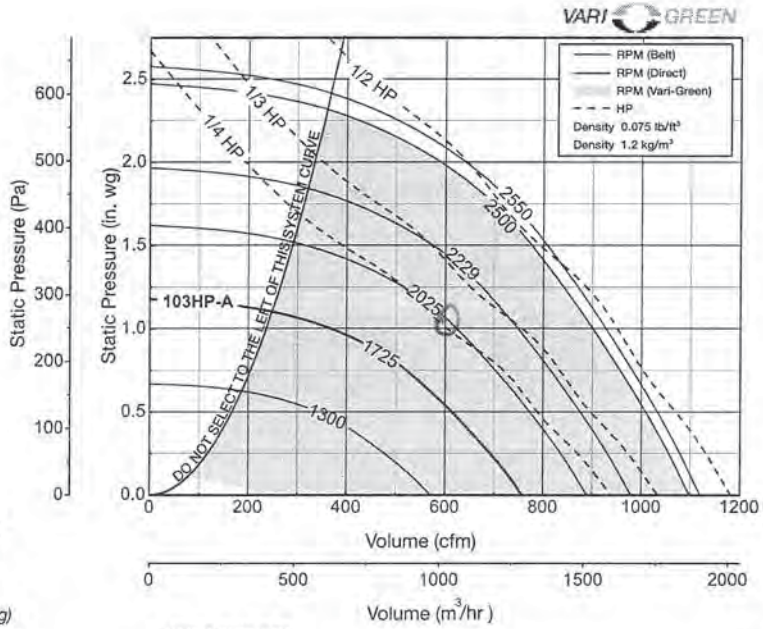

Damper Size = 12 x 12 *(305 x 305)*
Roof Opening = 14½ x 14½ *(368 x 368)*
Shroud Thickness = 0.051 *(1.3)*
Motor Cover Thickness = 0.040 *(1.0)*
Curb Cap Thickness = 0.064 *(1.6)*
^Approximate Unit Weight G/GB = 58/63 lbs. *(26/29 kg)*

100LBS EA

All dimensions in inches *(millimeters)*. *May be greater depending on motor. ^Weight shown is largest cataloged Open Drip-Proof motor.

Direct Drive RPM

A-1725 RPM	VG-2550 RPM

Motor HP Belt	Motor HP Direct		Fan RPM		Static Pressure in Inches wg 0	0.25	0.5	0.75	1	1.25	1.5	1.75	2	2.25
101HP	103HP													
1/4	VG-1/2		1300	CFM	571	477	342							
				BHP	0.06	0.06	0.07							
				Sones	6.6	5.7	5.3							
			1445	CFM	635	553	449	243						
				BHP	0.08	0.09	0.09	0.08						
				Sones	8.4	7.5	7	6.3						
			1590	CFM	699	626	537	417						
				BHP	0.10	0.11	0.12	0.12						
				Sones	10.4	9.5	9.1	8.3						
	VARI GREEN	A-1/4	1725	CFM	758	692	613	521	364					
				BHP	0.13	0.14	0.15	0.16	0.15					
				Sones	11.4	10.7	10.6	10.1	10					
			1880	CFM	826	767	697	618	518	337				
				BHP	0.17	0.18	0.19	0.20	0.20	0.18				
				Sones	12.7	12.2	11.9	12	11.4	11.9				
			2025	CFM	890	836	772	702	622	515	313			
				BHP	0.21	0.23	0.24	0.24	0.26	0.25	0.22			
				Sones	14.2	13.6	13.3	13.2	12.6	12	11.4			
1/3			2137	CFM	939	889	830	765	693	607	474			
				BHP	0.25	0.26	0.28	0.28	0.29	0.30	0.28			
				Sones	15.4	14.8	14.4	14.2	13.4	13.1	12.1			
			2229	CFM	979	931	875	814	748	674	574	406		
				BHP	0.28	0.30	0.31	0.32	0.33	0.35	0.33	0.31		
				Sones	15.8	15.4	14.8	14.5	14.1	13.7	13.2	12.0		
1/2			2336	CFM	1026	981	928	871	809	742	661	543	358	
				BHP	0.33	0.34	0.36	0.36	0.37	0.39	0.40	0.37	0.34	
				Sones	16.4	16	15.4	14.9	14.7	14	14.1	13.5	13.6	
			2500	CFM	1098	1056	1008	956	901	840	775	695	583	416
				BHP	0.40	0.42	0.43	0.45	0.45	0.46	0.48	0.48	0.46	0.42
				Sones	17.8	17.4	16.9	16.7	15.8	15.5	14.8	15.2	15.7	16.6
			2550	CFM	1120	1078	1032	982	928	869	807	735	639	497
				BHP	0.43	0.44	0.46	0.47	0.47	0.49	0.51	0.52	0.50	0.47
				Sones	18.2	17.9	17.4	17.2	16.3	16.1	15.1	15.6	16.2	17.2

MAXIMUM BHP AT A GIVEN RPM = $(RPM/3165)^3$
MAXIMUM RPM = 2550
TIP SPEED (ft/min) = RPM x 2.978
MAXIMUM MOTOR FRAME SIZE = 56

Performance certified is for installation type A: Free inlet, Free outlet. Power rating (BHP) does not include transmission losses. Performance ratings include the effects of a birdscreen. The sound ratings shown are loudness values in hemispherical sones at 5 ft. (1.5 m) in a hemispherical free field calculated per AMCA Standard 301. Values shown are for installation type A: free inlet hemispherical sone levels.

Roof Downblast - Exhaust
Belt & Direct Drive
GB-180 • G-183

FUTURE
TOILET EXH.

GREENHECK
Building Value in Air.

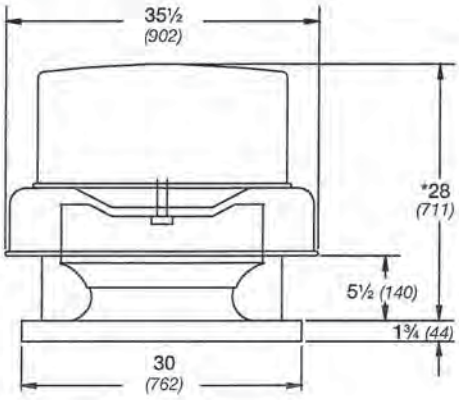

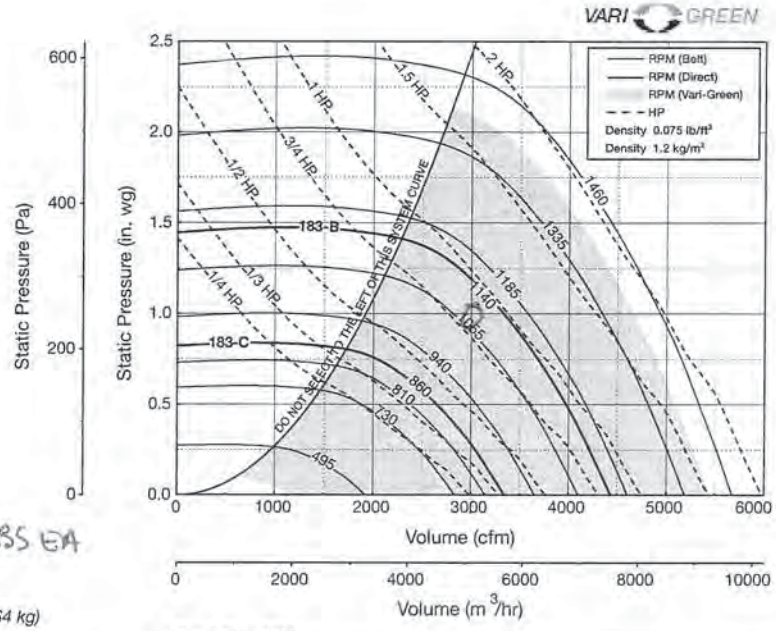

Damper Size = 18 x 18 *(457 x 457)*
Roof Opening = 20½ x 20½ *(521 x 521)*
Shroud Thickness = 0.064 *(1.6)*
Motor Cover Thickness = 0.040 *(1.0)*
Curb Cap Thickness = 0.064 *(1.6)*
^Approximate Unit Weight G/GB = 108/142 lbs. *(49/64 kg)*

-150LBS EA

All dimensions in inches *(millimeters)*. *May be greater depending on motor. ^Weight shown is largest cataloged Open Drip-Proof motor.

Direct Drive RPM

C-860 RPM	B-1140 RPM

Motor HP Belt	Motor HP Direct		Fan RPM		Static Pressure in Inches wg 0	0.125	0.25	0.5	0.75	1	1.25	1.5	1.75	2
180	183													
1/4	VG-1		730	CFM	2839	2668	2469	1882						
				BHP	0.21	0.23	0.25	0.25						
				Sones	7.4	8.7	7.2	6.7						
1/3			810	CFM	3150	2997	2832	2375						
				BHP	0.29	0.31	0.33	0.35						
				Sones	8.8	9.9	8.7	8.2						
1/2	VARI GREEN	C-1/2	860	CFM	3344	3202	3049	2647	2015					
				BHP	0.35	0.36	0.39	0.42	0.4					
				Sones	10.1	10.8	9.8	9.1	8.1					
			940	CFM	3655	3527	3388	3052	2601					
				BHP	0.46	0.47	0.49	0.54	0.54					
				Sones	12.7	12.8	12.0	11.1	10.3					
3/4			1000	CFM	3888	3769	3638	3339	2953	2387				
				BHP	0.55	0.57	0.58	0.64	0.66	0.63				
				Sones	15.2	14.7	13.7	13.0	11.9	11.1				
			1055	CFM	4102	3990	3867	3596	3252	2811				
				BHP	0.65	0.67	0.68	0.74	0.77	0.77				
				Sones	16.2	15.7	14.9	14.0	12.9	12.4				
1		B-1	1140	CFM	4433	4329	4216	3980	3684	3328	2856			
				BHP	0.81	0.84	0.85	0.93	0.96	0.98	0.95			
				Sones	17.9	17.4	16.8	16.0	15.1	14.3	13.6			
	VG-2		1185	CFM	4608	4508	4401	4179	3900	3575	3178	2499		
				BHP	0.91	0.94	0.96	1.03	1.07	1.1	1.09	0.99		
				Sones	19.0	18.4	17.8	17.1	16.2	15.4	14.7	13.7		
1½			1335	CFM	5191	5102	5010	4814	4599	4344	4052	3713	3262	
				BHP	1.31	1.33	1.36	1.41	1.49	1.54	1.57	1.56	1.51	
				Sones	22	22	21	21	19.9	19.2	18.7	18.2	17.6	
2			1400	CFM	5444	5359	5273	5086	4892	4655	4401	4097	3747	3253
				BHP	1.51	1.54	1.56	1.61	1.71	1.75	1.81	1.81	1.79	1.71
				Sones	24	23	23	22	22	21	21	20	19.7	19.2
			1460	CFM	5677	5596	5514	5336	5155	4938	4699	4426	4123	3765
				BHP	1.71	1.74	1.77	1.81	1.93	1.97	2.03	2.05	2.05	2.02
				Sones	26	25	24	24	23	23	22	22	22	21

MAXIMUM BHP AT A GIVEN RPM = $(RPM/1149)^3$
MAXIMUM RPM = 1460
TIP SPEED (ft/min) = RPM x 4.843
MAXIMUM MOTOR FRAME SIZE = 184T

Performance certified is for installation type A: Free inlet, Free outlet. Power rating (BHP) does not include transmission losses. Performance ratings include the effects of a birdscreen. The sound ratings shown are loudness values in hemispherical sones at 5 ft. (1.5 m) in a hemispherical free field calculated per AMCA Standard 301. Values shown are for installation type A: free inlet hemispherical sone levels.

FUTURE DISHWASH

SWB-116 - Belt Drive
Series 100

GREENHECK
Building Value in Air.

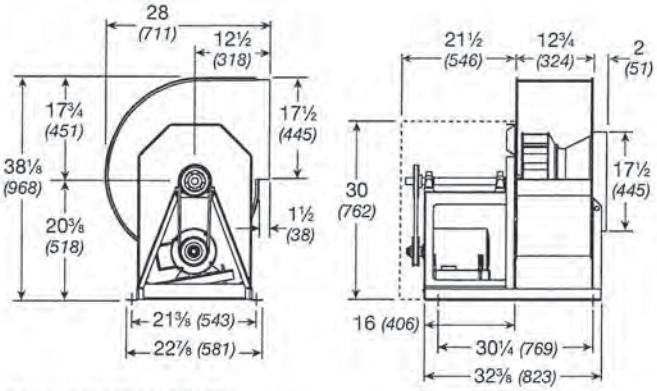

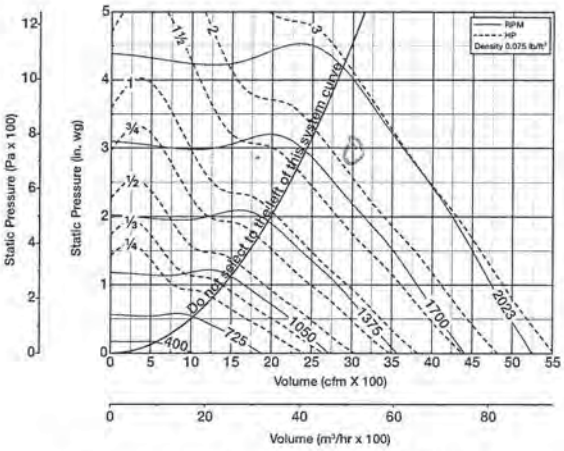

Wheel Diameter = 17 *(432)*
Shaft Diameter = 1 *(25)*
Outlet Area = 1.52 ft^2 *(0.14 m^2)*
^Approximate Unit Weight = 241 lb. *(109 kg)* ← 250 LBS EA

All dimensions in inches *(millimeters)*
For additional discharge positions see page 15
^Weight shown is largest cataloged Open Drip Proof motor

Maximum BHP at a given RPM = (RPM/1403)^3
(Maximum KW at a given RPM = (RPM/1547)^3)
Maximum RPM = 2023
Tip Speed (ft/min.) = RPM x 4.32
(Tip Speed (m/s) = RPM x 0.0219)
Maximum Motor Frame Size = 184T

SWB-116

CFM	OV		Static Pressure in Inches wg									
			0.5	0.75	1	1.25	1.5	2	2.5	2.75	3	3.5
1200	789	RPM	750									
		BHP	0.15									
		Sones	5.8									
1560	1026	RPM	846	943	1026							
		BHP	0.22	0.30	0.38							
		Sones	7.1	7.8	8.7							
1920	1263	RPM	949	1039	1120	1192	1259					
		BHP	0.31	0.40	0.50	0.60	0.71					
		Sones	8.8	9.6	10.7	11.5	12.0					
2280	1500	RPM	1061	1141	1216	1287	1352	1470	1576			
		BHP	0.42	0.53	0.65	0.76	0.88	1.12	1.38			
		Sones	10.9	11.8	12.5	12.9	13.3	14.4	16.4			
2640	1737	RPM	1182	1250	1320	1385	1448	1564	1666	1715	1762	1851
		BHP	0.57	0.69	0.82	0.96	1.09	1.36	1.64	1.79	1.93	2.23
		Sones	13.5	13.8	14.1	14.6	15.1	15.9	17.4	18.4	19.5	22
3000	1974	RPM	1306	1369	1429	1490	1548	1659	1761	1808	1853	1940
		BHP	0.76	0.89	1.03	1.18	1.34	1.64	1.95	2.11	2.26	2.59
		Sones	15.4	15.8	16.1	16.6	17.1	18.6	19.9	21	21	22
3360	2211	RPM	1432	1491	1545	1599	1654	1758	1857	1903	1948	
		BHP	0.99	1.14	1.29	1.45	1.62	1.96	2.30	2.47	2.64	
		Sones	17.6	18.0	18.4	18.9	19.6	21	23	23	23	
3720	2447	RPM	1560	1615	1667	1716	1764	1863	1955	2001		
		BHP	1.27	1.43	1.60	1.76	1.94	2.32	2.70	2.89		
		Sones	20	21	21	22	23	24	25	26		
4080	2684	RPM	1690	1742	1790	1837	1881	1971				
		BHP	1.60	1.78	1.96	2.14	2.32	2.72				
		Sones	23	24	25	25	26	27				
4440	2921	RPM	1821	1869	1916	1960	2002					
		BHP	1.99	2.18	2.38	2.58	2.77					
		Sones	27	28	28	29	30					
4800	3158	RPM	1953	1999								
		BHP	2.44	2.65								
		Sones	32	32								

Performance certified is for installation Type B - Free inlet, Ducted outlet. Power rating (Bhp) does not include transmission losses. Performance ratings do not include the effects of appurtenances (accessories). The AMCA Certified Ratings Seal applies to air performance only.

SWB-218 - Belt Drive
Series 200

FUTURE GREASE EXHAUST

GREENHECK
Building Value in Air.

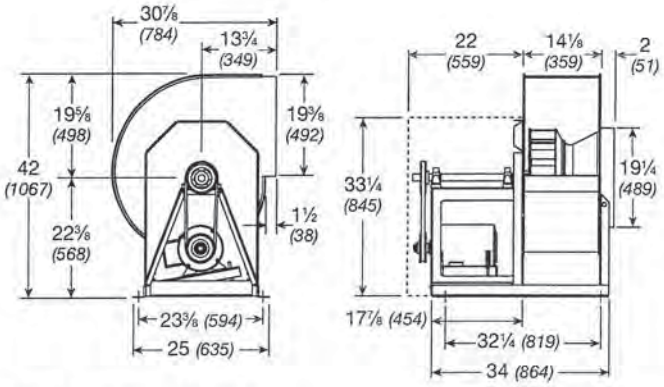

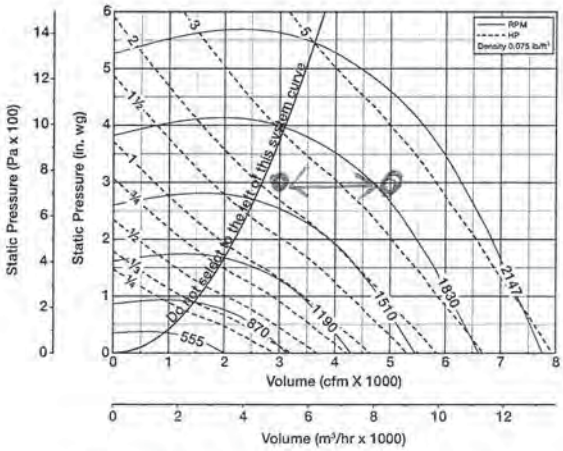

Wheel Diameter = 18⅝ *(473)*
Shaft Diameter = 1¼ *(32)*
Outlet Area = 1.87 ft² *(0.17 m²)*
^Approximate Unit Weight = 324 lb. *(147 kg)* ← 352LBS

All dimensions in inches *(millimeters)*
For additional discharge positions see page 15
^Weight shown is largest cataloged Open Drip Proof motor

Maximum BHP at a given RPM = $(RPM/1196)^3$
(Maximum KW at a given RPM = $(RPM/1319)^3$)
Maximum RPM = 2147
Tip Speed (ft/min.) = RPM x 4.78
(Tip Speed (m/s) = RPM x 0.0243)
Maximum Motor Frame Size = 213T

SWB-218

CFM	OV		Static Pressure in Inches wg									
			0.5	1	1.5	2	2.5	3	3.5	4	4.5	5
2000	1070	RPM	762	963	1136							
		BHP	0.26	0.49	0.75							
		Sones	10.1	11.3	13.4							
2500	1337	RPM	862	1023	1185	1330	1459					
		BHP	0.37	0.62	0.92	1.24	1.58					
		Sones	10.1	11.6	13.0	15.2	17.9					
3000	1604	RPM	974	1110	1245	1380	1507	1623	1730			
		BHP	0.52	0.80	1.12	1.47	1.85	2.24	2.65			
		Sones	11.5	12.6	13.9	15.5	18.3	21	24			
3500	1872	RPM	1092	1211	1327	1443	1557	1672	1779	1878	1971	2060
		BHP	0.72	1.03	1.36	1.74	2.15	2.58	3.02	3.48	3.95	4.43
		Sones	13.6	14.2	15.2	16.8	19.1	22	25	27	29	31
4000	2139	RPM	1218	1322	1423	1525	1626	1727	1828	1927	2020	2108
		BHP	0.97	1.32	1.68	2.07	2.51	2.95	3.43	3.93	4.44	4.96
		Sones	15.7	16.4	17.3	18.7	21	23	25	27	29	32
4500	2406	RPM	1346	1438	1530	1619	1709	1800	1890	1979	2069	
		BHP	1.28	1.66	2.07	2.48	2.92	3.41	3.90	4.42	4.96	
		Sones	18.2	18.8	19.6	21	23	24	26	28	30	
5000	2764	RPM	1475	1557	1643	1723	1804	1885	1967	2048		
		BHP	1.66	2.08	2.52	2.97	3.43	3.91	4.45	5.00		
		Sones	21	21	22	24	25	26	28	29		
5500	2941	RPM	1605	1683	1758	1834	1907	1981	2055			
		BHP	2.10	2.58	3.04	3.54	4.03	4.54	5.07			
		Sones	24	24	25	26	27	28	30			
6000	3209	RPM	1737	1810	1877	1949	2017	2084				
		BHP	2.63	3.15	3.65	4.18	4.72	5.25				
		Sones	27	28	28	29	30	31				
6500	3476	RPM	1869	1938	2002	2065	2131					
		BHP	3.26	3.81	4.37	4.91	5.49					
		Sones	31	31	31	32	33					
7000	3743	RPM	2003	2067	2128							
		BHP	3.98	4.57	5.18							
		Sones	34	35	35							

Performance certified is for installation Type B - Free inlet, Ducted outlet. Power rating (Bhp) does not include transmission losses. Performance ratings do not include the effects of appurtenances (accessories). The AMCA Certified Ratings Seal applies to air performance only.

Typical Installations

GREENHECK
Building Value in Air.

General Clean Air or Fume Hood (Non-Grease)

The SFD, SFB, SWD and SWB are designed for applications ranging from clean air to contaminated air. Typical installations are shown below. Installations must include a means for inspecting, cleaning and servicing the exhaust fan.

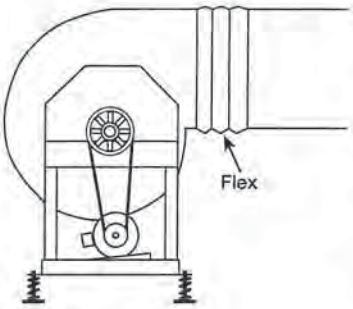

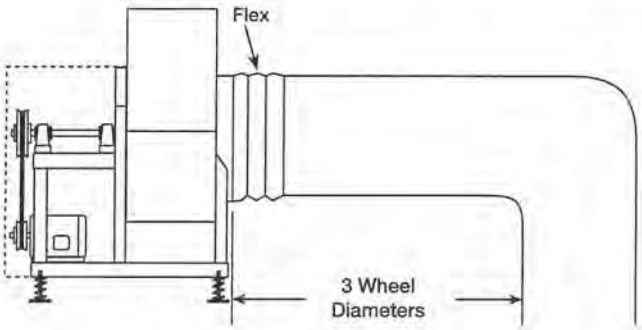

UL 762 KITCHEN EXHAUST

SWB Commercial Kitchen (Grease)

Greenheck's SWB Series 200 and 300 are designed to meet restaurant and foodservice applications. These fans are UL and cUL Listed for grease removal and have been tested under elevated temperature conditions.

Due to high temperatures and grease-laden airstreams in commercial kitchen ventilation, system designers must be aware of governing codes and guidelines. The National Fire Protection Association (NFPA) is the primary source used by many local codes for commercial kitchen ventilation systems. Local code authorities should be consulted before proceeding with any kitchen ventilation project.

Installation must include a means for inspecting, cleaning and servicing the exhaust fan.

Fans selected for grease removal must include a weatherhood, access door and 1-inch *(25 mm)* drain connection. For grease applications where the fan is mounted indoors, the welded scroll option must be selected. An outlet guard is strongly recommended when the fan discharge is accessible. When an outlet guard is not ordered with the fan, it must be provided by the installer. An upblast discharge is recommended. No dampers are to be used in the system.

The fan discharge must be a minimum of 40 inches *(1016 mm)* above the roof line and the exhaust duct must be fully welded to a minimum distance of 18 inches *(457 mm)* above the roof surface.

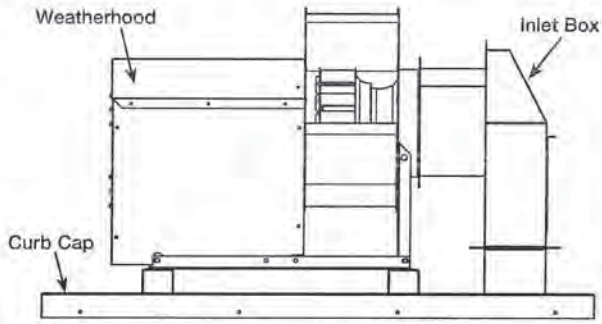

Inlet box and curb cap are used when space is limited and a 90° turn is required less than 3 wheel diameters from the inlet.

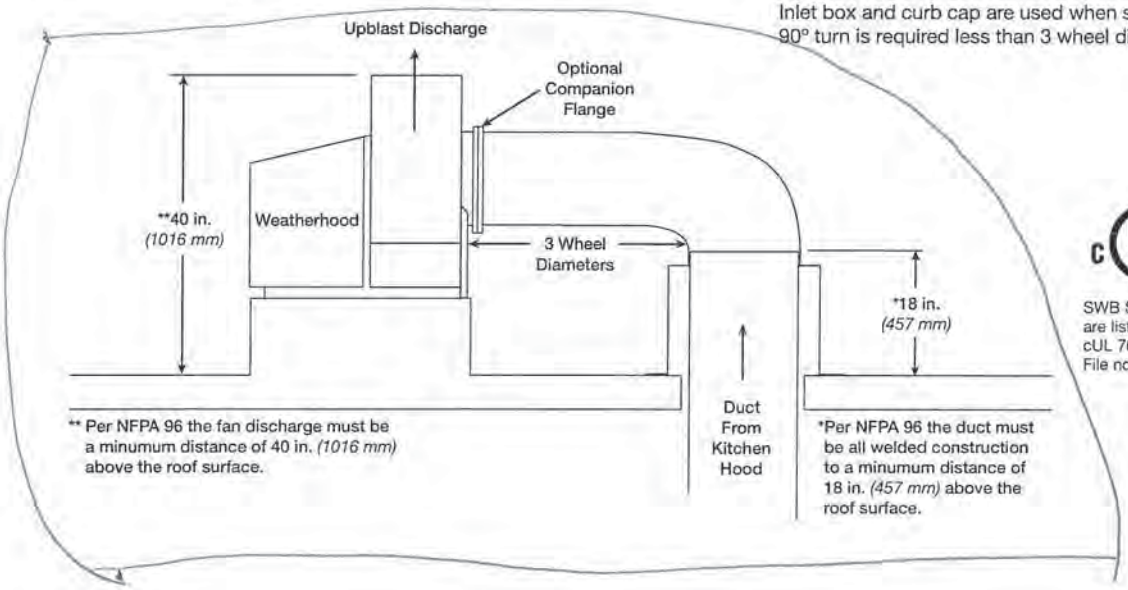

c UL US LISTED

SWB Series 200 and 300 models are listed for grease removal (UL/cUL 762).
File no. MH11745

Mounting Options

GREENHECK
Building Value in Air.

Vibration Isolators

Base-mounted neoprene or spring isolators are available to lessen mechanical vibration and assure quiet operation. Free-standing, restrained and housed spring isolators are also available. Isolators are sized to match the weight of each fan.

Free-Standing Open Spring Mounts -

Type 3, 1-inch Deflection
Free-standing spring isolators are unhoused laterally stable steel springs. They provide a minimum horizontal stiffness of 0.8 times the rated vertical stiffness and provide an additional 50% overload capacity. These isolators are equipped with a top-mounted adjusting bolt and an acoustical non-skid base. Springs are color coded to indicate load capacity.

Housed Spring Mounts

Type 4B, 1-inch Deflection
Housed spring isolators consist of steel springs assembled into a telescoping housing with a top-mounted adjusting bolt and an acoustical non-skid base. Housed spring isolators include resilient inserts to prevent metal-to-metal contact and provide snubbing for side loads. Springs provide an additional 50% overload capacity and are color coded to indicate load capacity.

Rubber Mounts -

Type 2, ¼-inch and ½-inch Deflection
Neoprene mountings consist of a steel top plate and base plate completely embedded in colored (oil-resistant) neoprene for easy identification of capacity. Neoprene mountings are furnished with a tapped hole in the center. This enables the equipment to be bolted securely to the rubber mount.

Restrained Spring Mounts -

Type 4A, 1-inch Deflection
Restrained spring isolators consist of laterally stable, free-standing springs assembled into a steel housing. These assemblies are designed for vertical and horizontal motion restraint. Restrained spring isolators can be used for blocking during equipment installation and are provided with leveling bolts. Springs provide 50% overload capacity and are color coded or identified to indicate load capacity. Restrained spring mounts are recommended for equipment subject to wind loading or large torquing forces.

Direct Mount - Type A

No base required. Isolators are attached directly to equipment. Direct isolation can be used if equipment is unitary and rigid without the use of additional support. If there is any doubt whether or not equipment can be supported directly on isolators, use rails, bases or consult the factory.

Mounting Rails

with Isolators
Isolation mounting rails are available with either rubber mount, free-standing open or restrained spring isolators. The isolators are mounted between aluminum rails that run the length of the fan base. Isolation rails provide easy installation on isolated systems, and are ideal for applications where there is a large overhung load. Mounting rails are available for fans up to size 36.

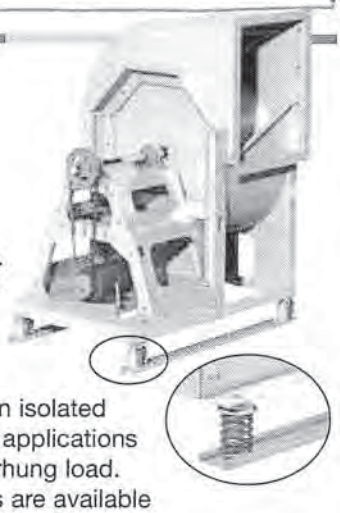

Equipment Supports

Models GESS and GESR equipment supports are available for roof mounting of utility fans up to size 36. Equipment supports are available in a number of lengths, widths, heights, and can also be built for a pitched roof.

FUTURE REST. MUA UNIT

AAON **RN SERIES ROOFTOP UNITS** CONTINUE TO LEAD THE PACKAGED ROOFTOP EQUIPMENT INDUSTRY IN PERFORMANCE AND SERVICEABILITY. DOUBLE WALL RIGID POLYURETHANE FOAM INSULATED CABINET CONSTRUCTION AND DIRECT DRIVE BACKWARD CURVED PLENUM FANS ALLOW RN SERIES UNITS TO HAVE QUIET, ENERGY EFFICIENT AIR FLOW WITH HIGH STATIC PRESSURE CAPABILITIES. RN SERIES UNITS ALSO FEATURE LOCKABLE HINGED DOORS WHICH PROVIDE SERVICE ACCESS TO ALL SECTIONS OF THE UNIT.

Applications

- Air-cooled condenser or air-source heat pump packaged DX rooftop units, 6-140 tons.
- Water-cooled condenser, water-source heat pump, or geothermal heat pump configurations.
- Chilled water or non-compressorized DX air handling units, 1,100-55,500 cfm.
- Makeup air capability, up to 100% outside air, to meet ventilation requirements.
- High performance hot water, steam, electric, and gas heating.
- Variable capacity and variable speed R-410A scroll compressors for load matching cooling and improved part load efficiency.

▲ 26 & 31 - 70 ton RN Series Air-Cooled Condenser Packaged Rooftop Unit.

APPROX. 6,000 LBS

Construction

- Two-inch double wall rigid polyurethane foam panel cabinet construction has a thermal resistance of R-13 or greater, which exceeds the R-value of a cabinet with four-inch thick fiberglass construction. Panels include a thermal break, with no metal contact from inside to outside, to prevent heat transfer through the panel and prevent condensation on the outside of the cabinet. The inner wall protects the insulation from moisture damage, prevents microbial growth, and is easy to clean. This type of construction also makes the cabinet more rigid and resistant to damage, provides increased sound dampening, and reduces air leakage and infiltration.

Don't see the specific product you need?
AAON can meet your requirements with Custom Equipment designed specifically for your exact application and job specifications.
Visit www.aaon.com or call 918.583.2266 to locate a representative near you.

▲ Cutaway of panel showing thermal break and foam core.

- Access doors with full length stainless steel piano hinges and quarter turn lockable handles provide improved reliability over single point hinges and make the unit easily serviceable.
- Corrosion resistant exterior polyurethane paint exceeds a 2,500 hour salt spray test.
- Double sloped stainless steel drain pans eliminate standing water which can support microbial growth and stainless steel construction prevents corrosion that could lead to water leaks and contaminants in the air stream.

Fans and Blowers

- Direct drive backward curved plenum supply fans with rubber isolation mounts are more energy efficient, quieter, and require less maintenance than belt driven fans.
- VFD controlled supply, exhaust, and return fans for precise air flow control, building pressure control, and reduced power consumption.

Controls

- Labeled electrical components and color-coded wiring match the unit specific color-coded wiring diagram which is laminated and permanently affixed inside the control compartment.
- Factory provided or customer provided controller can be selected to meet existing or new building control architecture.
- Unit controls and compressors are contained within compartment isolated from the air stream for ease of service and quiet operation.
- Run test report, color-coded wiring diagram, and Installation, Operation and Maintenance manual with startup form is included in control access compartment of every unit.

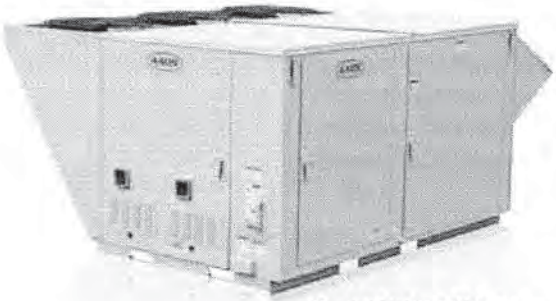

▲ 6 - 25 & 30 ton RN Series Air-Cooled Condenser Packaged Rooftop Unit.

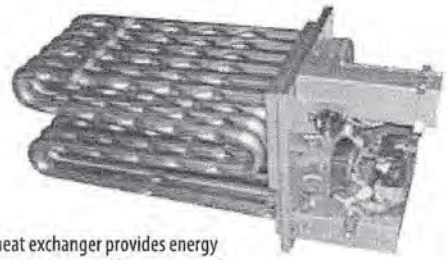

▶ Dimpled heat exchanger provides energy efficient heat transfer and has no internal turbulator, which can corrode over time.

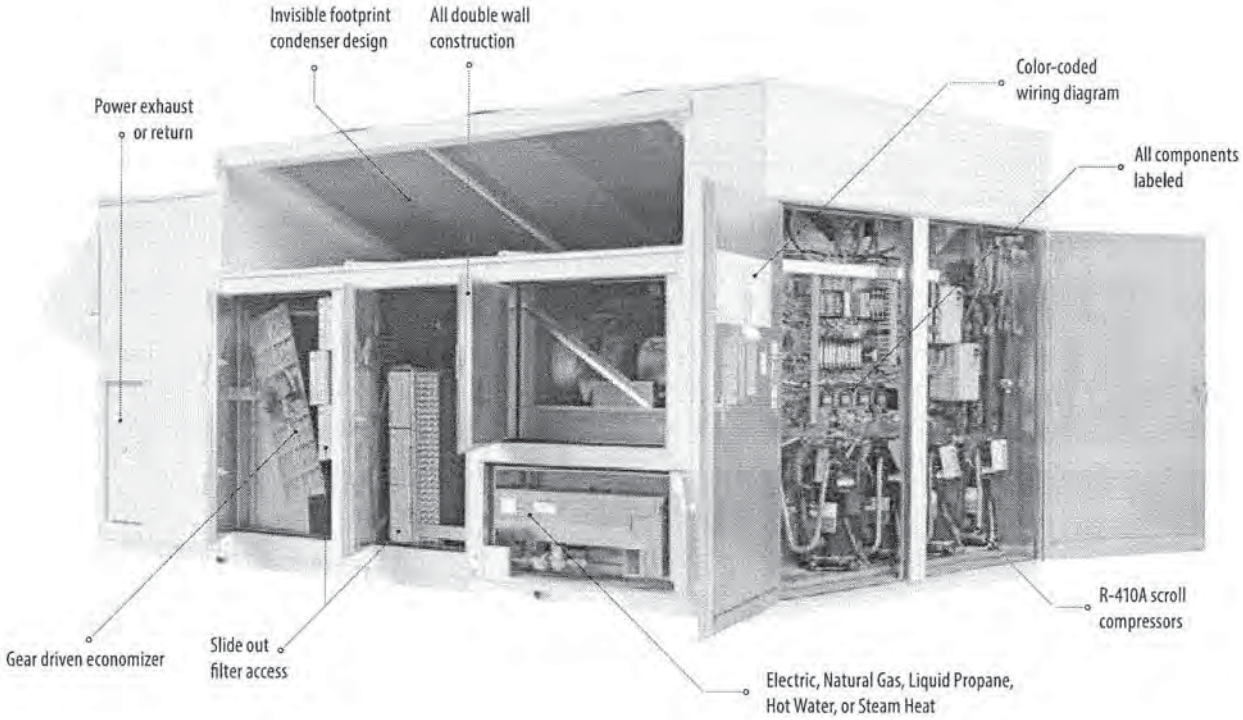

Features and Options

- Variable capacity and variable speed R-410A scroll compressors for load matching cooling and improved part load efficiency.
- Multiple methods of humidity control including: High Capacity Cooling Coils, Return Air Bypass, Mixed Air Bypass, and Modulating Humidity Control which provides energy efficient dehumidification, even with low sensible heat loads, without the temperature swings common with on/off reheat systems.
- Modulating gas heat and SCR electric heat provide energy efficient, consistent supply air temperature heating and improved occupancy comfort.
- Factory installed, sensible or enthalpy, gear driven economizer allows for free cooling.
- Multiple high efficiency filtration options, with up to a MERV 14 efficiency rating.
- Factory installed total and sensible AAONAIRE® energy recovery wheels save cooling and heating dollars.
- Polymer e-coated coils are available to extend the life of the coils and protect them in corrosive environments.
- Interior corrosion protection option protects interior components of the unit in corrosive environments.
- VFD controlled or ECM driven condenser fans for head pressure control, reduced power consumption and lower sound levels at off design ambient conditions.

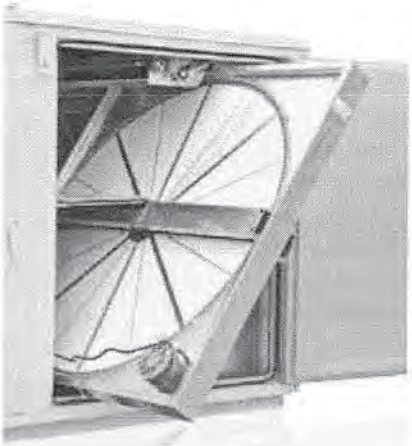

▲ Factory installed AAONAIRE® energy recovery wheel saves heating and cooling energy.

◀ VFD Controlled Variable Speed Scroll Compressor

▲ Gear driven economizer eliminates the excess play and binding that occurs with linkage type economizers.

▶ Variable capacity scroll compressors provide load matching cooling and improve part load efficiency.

RN Model	Cabinet	Nominal cfm	Width	Height*	Length*
RN-006	A	2,200	79	44	82
RN-007		2,500			
RN-008		2,800			
RN-010		3,400			
RN-009	B	4,000	96	50	88
RN-011		4,600			
RN-013		5,200			
RN-015		5,800			
RN-016	C	4,800	101	59	110
RN-018		5,400			
RN-020		6,000			
RN-025		7,500			
RN-030		9,000			
RN-026	D	8,600	100	97	155
RN-031		10,100			
RN-040		12,800			
RN-050		15,000			
RN-060		18,000	8'4"	8'-1"	12'-11"
RN-070		21,000			
RN-055	E	21,000	142	+ 18" WRB 9'-7" TALL	241
RN-065		24,000			
RN-075		27,000			
RN-090		22,000		102	
RN-105		26,500			
RN-120		31,000			303
RN-130		34,000			
RN-140		37,000			

**Dimensions may vary depending on options selected.*
All dimensions are in inches.
Design cfm may be 30-50% greater or less than nominal cfm.

▼ 55, 65 and 75-140 ton RN Series Air-Cooled Condenser Packaged Rooftop Unit with Microchannel Condensor Coils.

◀ Microchannel condenser coils are more efficient, lighter, and use less refrigerant than traditional fin and tube condenser coils.

TYP. CORRIDOR UNIT
(UP TO 5TONS)

900LBS

Figure 13. Cooling and gas/electric - 4-5 tons high efficiency - horizontal airflow supply and return

Note: All dimensions are in inches/millimeters.

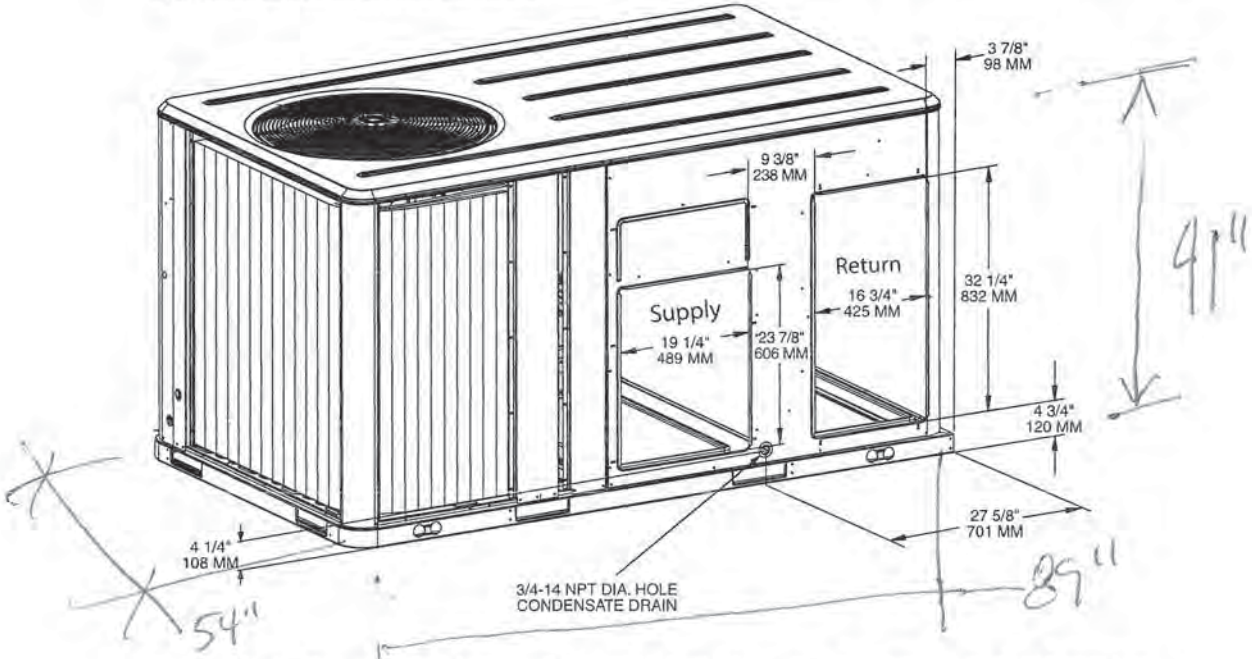

Figure 14. Cooling and gas/electric - 4-5 tons high efficiency - unit clearance and roof opening

Note: All dimensions are in inches/millimeters.

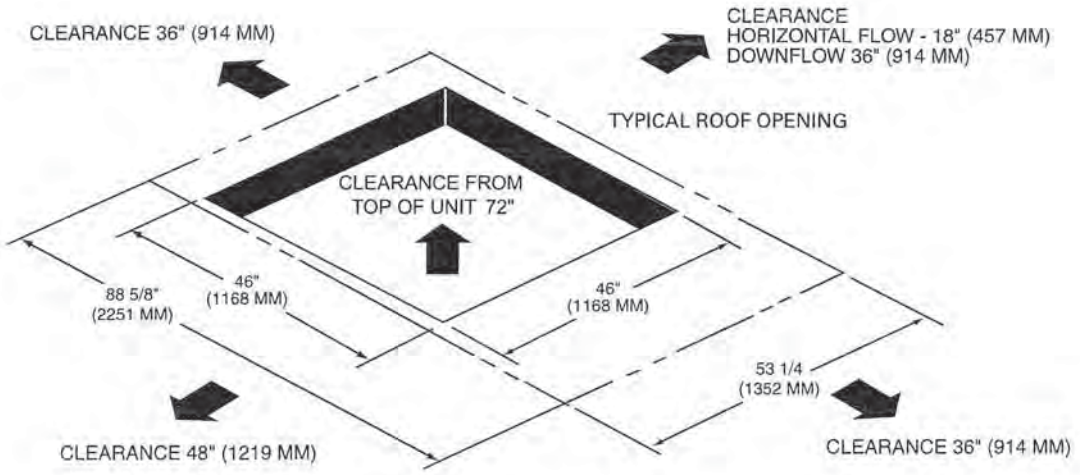

Figure 15. Cooling and gas/electric - 4-5 tons high efficiency - roof curb

Note: All dimensions are in inches/millimeters.

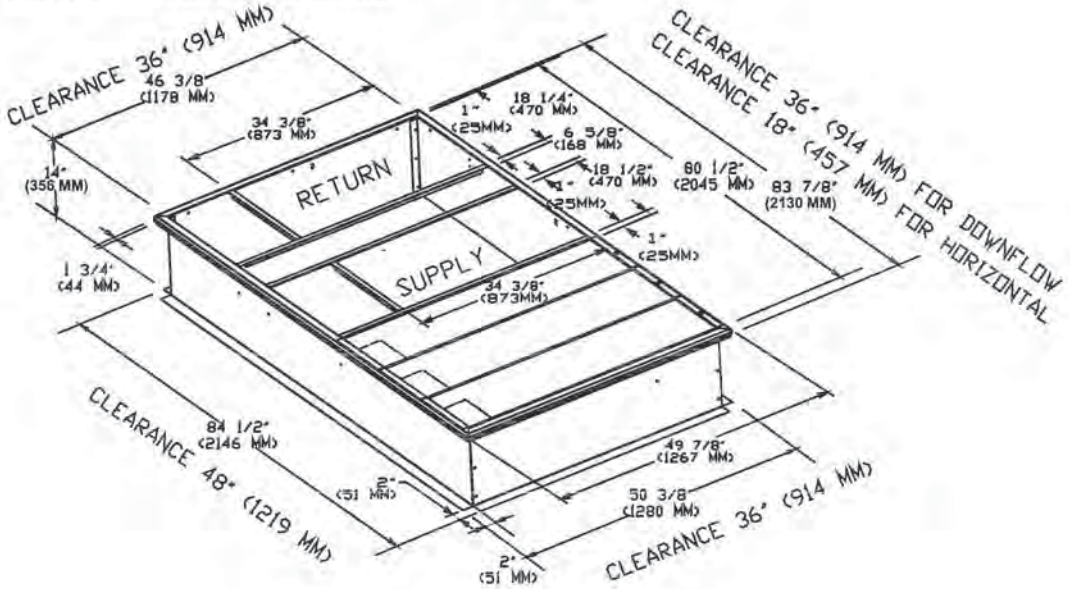

Figure 16. Cooling and gas/electric - 4-5 tons high efficiency - downflow duct connections field fabricated

Note: All dimensions are in inches/millimeters.
Note: See "Clearance required from duct to combustible surfaces (inches)," p. 18 for duct clearance to combustible materials.

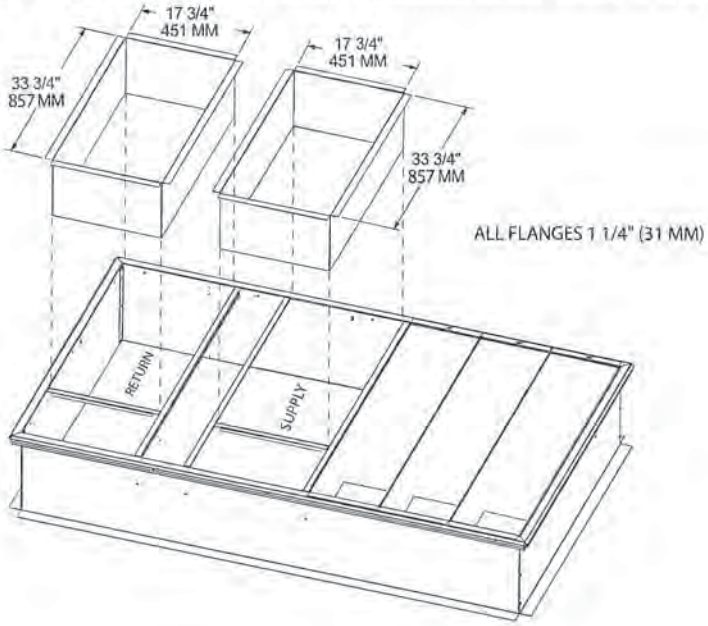

Dimensional Data

Figure 17. Cooling and gas/electric - 4-5 tons high efficiency - economizer, manual or motorized fresh air damper

Note: All dimensions are in inches/millimeters.

Figure 18. Cooling and gas/electric - 4-5 tons high efficiency - swing diameter for hinged door(s) option

Note: All dimensions are in inches/millimeters.

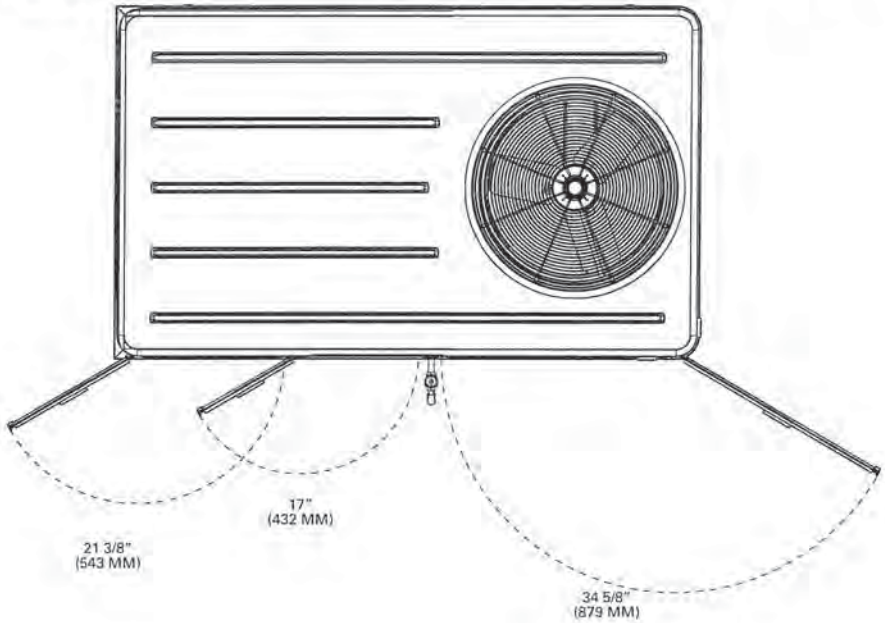

Weights

Table 30. Maximum unit & corner weights (lbs) and center of gravity dimensions (in.) - cooling models

Unit		Maximum Model Weights[a]		Corner Weights[b]				Center of Gravity (in.)	
Tons	Model No.	Shipping	Net	A	B	C	D	Length	Width
3	THC037E	614	544	163	144	111	125	33	19
4	THC047E	787	692	220	178	132	163	40	23
5	THC067E	841	746	241	193	139	173	39	22

(a) Weights are approximate.
(b) Corner weights are given for information only.

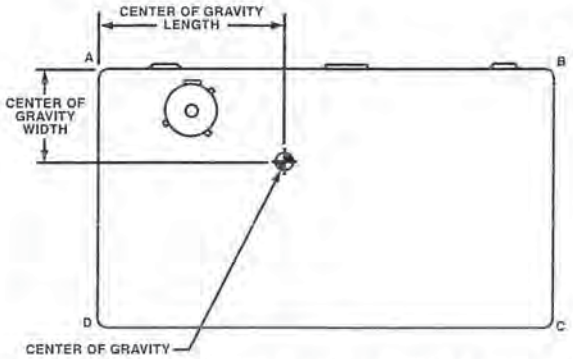

Table 31. Maximum unit & corner weights (lbs) and center of gravity dimensions (in.) - gas/electric models

Unit		Maximum Model Weights[a]		Corner Weights[b]				Center of Gravity (in.)	
Tons	Model No.	Shipping	Net	A	B	C	D	Length	Width
3	YHC037E	676	606	178	162	126	139	33	19
4	YHC047E	858	763	238	200	148	176	40	23
5	YHC067E	917	822	261	218	156	187	40	22

(a) Weights are approximate.
(b) Corner weights are given for information only.

Table 32. Factory installed options (fiops)/accessory net weights (lbs)[a],[b]

	T/YHC037E Net Weight	T/YHC047E-067E Net Weight
Accessory	3 Tons	4-5 Tons
460V/575V IDM Transformer[c]	29	29
Barometric Relief	7	10
Belt Drive Option (3 phase only)	31	31
Coil Guards	12	20
Economizer	26	36
Electric Heaters[d]	15	30
Hinged Doors	10	12
Low Leak Economizer	68	93
Manual Outside Air Damper	16	26
Motorized Outside Air Damper	20	30

continued on next page

Weights

Table 32. Factory installed options (fiops)/accessory net weights (lbs)[a],[b] (continued)

Accessory	T/YHC037E Net Weight 3 Tons	T/YHC047E-067E Net Weight 4-5 Tons
Novar Control	8	8
Oversized Motor	5	8
Powered Convenience Outlet	38	38
Powered Exhaust	40	40
Reheat Coil	12	14
Roof Curb	61	78
Smoke Detector, Supply	5	5
Smoke Detector, Return	7	7
Stainless Steel Heat Exchanger[e]	4	6
Through the Base Electrical	8	13
Through the Base Gas	5	5
Unit Mounted Circuit Breaker	5	5
Unit Mounted Disconnect	5	5

(a) Weights for options not listed are <5 lbs.
(b) Net weight should be added to unit weight when ordering factory-installed accessories.
(c) Apply weight with all 460V/575V units.
(d) Applicable to Cooling units only.
(e) Applicable to Gas/Electric units only.