CITY OF DUBLIN, OHIO

S.R. 161 / EITERMAN ROAD ROUNDABOUT

City of Dublin

14-010-CIP

INDEX OF SHEETS:

TITLE SHEET	1
SCHEMATIC PLAN	2
ROUNDABOUT GEOMETRICS	3
TYPICAL SECTIONS	4 - 11
SUBGRADE STABILIZATION DETAILS	12
GENERAL NOTES	13 - 16
MAINTENANCE OF TRAFFIC	17 - 43
GENERAL SUMMARY	44 - 47
SUBSUMMARIES	48 - 52
EROSION CONTROL	53 - 54
PLAN AND PROFILE	55 - 61
CROSS SECTIONS	62 - 71
PAVEMENT DETAILS	72 - 75
WALKING PATH DETAILS	76
PLAN AND PROFILE - ACCESS DRIVE	77
GRADING PLAN	78
STORM SEWER PLAN AND PROFILE	79 - 80
UNDERDRAIN DETAILS	81
WATER WORK	82 - 84
ELECTRICAL CONDUIT	85 - 90, 85A
TRAFFIC CONTROL	91 - 116
LIGHTING	117 - 125
HARDSCAPE PLAN	126 - 128
SHEET NOT USED	40

DESIGN DESIGNATION

	SR-161
CURRENT ADT (2015)	23,220
DESIGN YEAR ADT (2035)	32,260
DESIGN HOURLY VOLUME (2035)	3,226
DIRECTIONAL DISTRIBUTION	50%
TRUCKS (24 HOUR B&C)	7%
Td	5%
DESIGN SPEED	45 MPH
LEGAL SPEED	45 MPH
DESIGN FUNCTIONAL CLASSIFICATION:	MINOR ARTERIAL

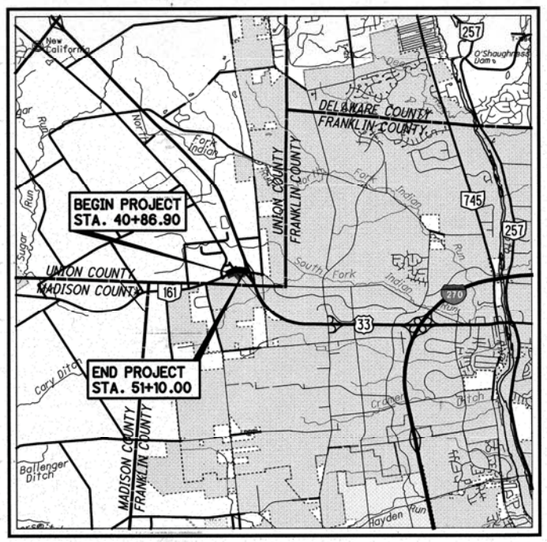

LOCATION MAP

SCALE IN MILES

0 1 2 3 4

N

NOTE:
THESE S.R. 161/EITERMAN ROAD ROUNDABOUT PLANS HAVE BEEN PREPARED AS A PHASED IMPLEMENTATION OF PROJECT UNI-33-24.87 (PID 80748), AS PREVIOUSLY DESIGNED BY BURGESS & NIPLE INC.

STANDARD CONSTRUCTION DRAWINGS								SUPPLEMENTAL SPECIFICATIONS	
ODOT						CITY OF DUBLIN		832	1/17/14
BP-3.1	7/18/14	MH-1.1	1/18/13	MT-102.20	7/18/14	PD-02	9/18/06	895	4/18/14
BP-5.1	7/19/13	MH-1.2	1/18/13	MT-105.10	7/19/13	PD-03	9/18/06	902	12/31/12
BP-7.1	1/19/07			MT-110.10	7/19/13	PD-05	9/18/06	995	4/20/07
		DM-1.1	1/18/13			PD-11	9/18/06		
F-2.1	7/19/13	DM-1.2	1/18/13	TC-41.20	10/18/13				
F-3.3	7/19/13	DM-1.4	1/18/13	TC-41.30	10/18/13				
F-3.4	7/19/13	DM-4.4	7/20/12	TC-41.40	10/18/13	CITY OF COLUMBUS			
				TC-41.50	10/18/13	AA-S125A	12/06/13		
RM-1.1	7/18/14	MT-95.30	7/18/14	TC-42.20	10/18/13	AA-S128	12/06/13		
RM-7.1	7/18/14	MT-95.50	7/19/13	TC-52.10	10/18/13				
		MT-97.10	7/18/14	TC-52.20	7/18/14				
CB-1.1	1/18/13	MT-97.11	7/18/14	TC-65.10	1/17/14				
CB-1.2	1/18/13	MT-99.20	7/19/13	TC-65.11	7/18/14				
CB-2.2	1/17/14	MT-101.60	7/19/13	TC-71.10	1/17/14				
		MT-101.90	7/18/14	TC-72.20	7/18/14				

ENGINEERS SEAL:

STATE OF OHIO
KEVIN JOSEPH GRATHWOL
E-68202
REGISTERED
PROFESSIONAL ENGINEER

REGISTERED ENGINEER — DATE 1/15/15

SIGNATURES BELOW SIGNIFY CONCURRENCE WITH THE GENERAL PURPOSE AND GENERAL LOCATION OF THE PROJECT ONLY AND DO NOT CONSTITUTE ASSURANCE TO OPERATE AS INTENDED. ALL TECHNICAL DETAILS REMAIN THE RESPONSIBILITY OF THE PROFESSIONAL CIVIL ENGINEER PREPARING THE PLANS.

APPROVED:

CITY ENGINEER, CITY OF DUBLIN, OHIO — DATE 1·16·2015

CITY ENGINEER, CITY OF MARYSVILLE, OHIO — DATE 2/5/2015

THE APPROVAL ON THE PART OF THE CITY OF COLUMBUS IS GIVEN PURSUANT TO THE PROVISIONS OF THE WATER SERVICE AGREEMENT BETWEEN THE CITY OF DUBLIN, OHIO AND THE CITY OF COLUMBUS, OHIO ON APRIL 13, 1993 AND ALL SUBSEQUENT AMENDMENTS THEREOF.

TEH RC Westerfield
ADMINISTRATOR, DIVISION OF WATER
CITY OF COLUMBUS, OHIO — DATE 1-27-15

Greg J. Davies by
DIRECTOR, DEPARTMENT OF PUBLIC UTILITIES
CITY OF COLUMBUS, OHIO — DATE 1·29·2015

Ohio Utilities Protection Service
Call 811 before you dig

PLAN PREPARED BY:

GPD GROUP®
Glaus, Pyle, Schomer, Burns & DeHaven, Inc.
1801 Watermark Drive, Suite 150
Columbus, Ohio 43215
614.210.0751 Fax 614.210.0752

Copyright; Glaus, Pyle, Schomer, Burns & DeHaven, Inc. 2015

\\Akrn04\Data\2013\2013945\UNI\80748\roadway\sheets\80748GT001.dgn

#14-081

NO.	STATION	OFFSET	NORTHING	EASTING	ELEVATION	DESCRIPTION
1090	35+00.70	0.14 R	765,630.45	1,780,948.39	934.00	CONCRETE MONUMENT FOUND
1091	40+00.64	0.15 R	765,453.21	1,781,415.50	932.33	CONCRETE MONUMENT FOUND
1092	45+00.64	0.00	765,337.78	1,781,901.65	930.98	CONCRETE MONUMENT FOUND
1093	51+05.20	0.00	765,283.13	1,782,503.11	929.84	CONCRETE MONUMENT FOUND
1094	60+00.47	0.00	765,271.97	1,783,398.32	928.12	CONCRETE MONUMENT FOUND
1528	35+29.50	12.52 R	768,950.62	1,776,613.66		IRON PIN FOUND
1561	37+16.93	62.52 L	769,099.03	1,776,750.53		REBAR FOUND
1554	37+53.99	648.28 L	769,643.69	1,776,531.83		STONE "X"
1563	39+17.25	57.30 L	769,180.55	1,776,933.59		IRON PIN FOUND WITH I.D. CAP
1012	42+31.39	108.76 L	769,362.23	1,777,194.98		CONCRETE MONUMENT FOUND
1041	42+94.49	16.33 R	769,276.48	1,777,305.79		MONUMENT BOX FOUND
1064	45+68.23	7.59 R	769,310.38	1,777,566.90		MONUMENT BOX FOUND
1558	61+56.49	819.22 L	769,890.32	1,779,265.56		RAILROAD SPIKE FOUND

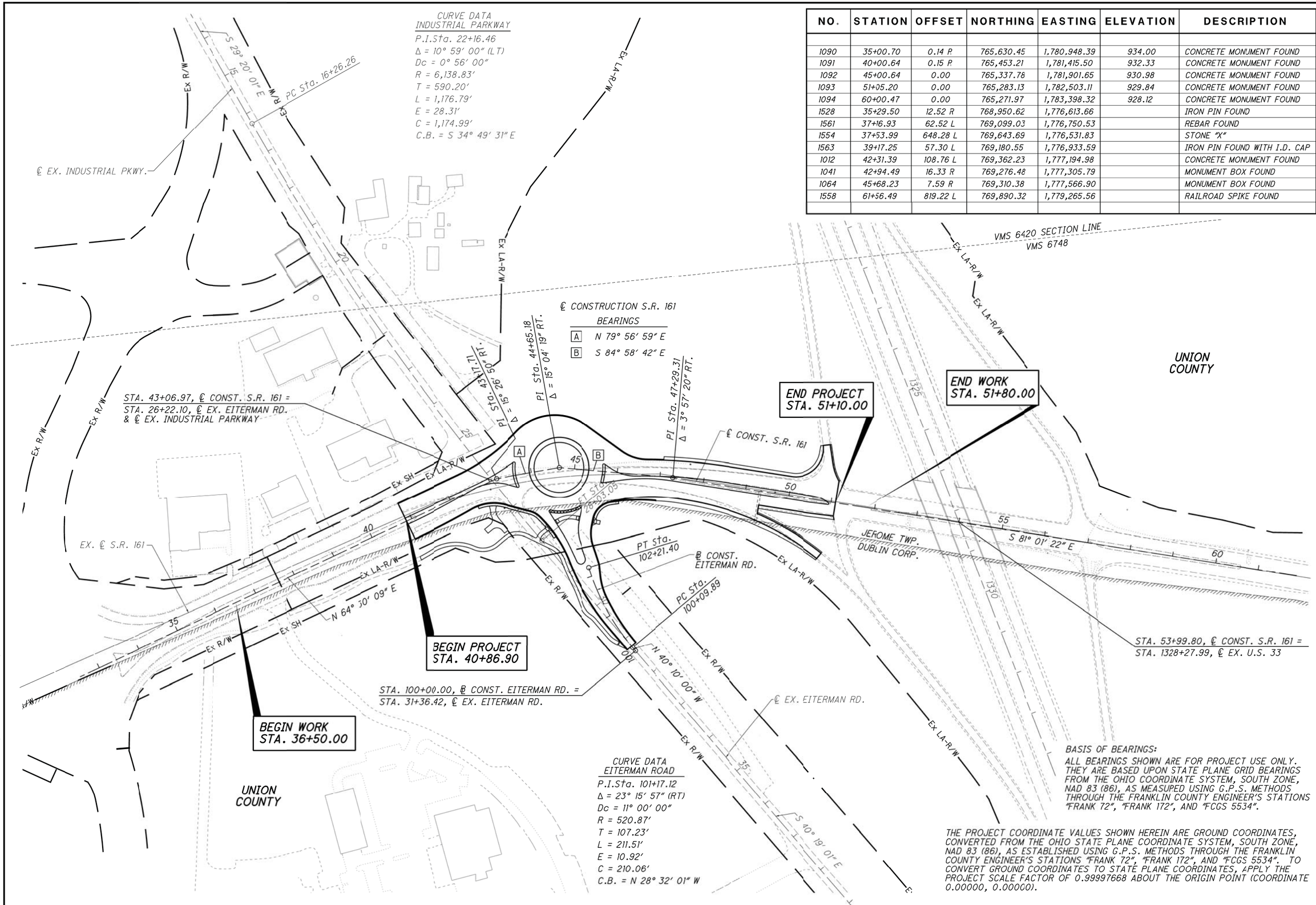

BASIS OF BEARINGS:
ALL BEARINGS SHOWN ARE FOR PROJECT USE ONLY. THEY ARE BASED UPON STATE PLANE GRID BEARINGS FROM THE OHIO COORDINATE SYSTEM, SOUTH ZONE, NAD 83 (86), AS MEASUPED USING G.P.S. METHODS THROUGH THE FRANKLIN COUNTY ENGINEER'S STATIONS "FRANK 72", "FRANK 172", AND "FCGS 5534".

THE PROJECT COORDINATE VALUES SHOWN HEREIN ARE GROUND COORDINATES, CONVERTED FROM THE OHIO STATE PLANE COORDINATE SYSTEM, SOUTH ZONE, NAD 83 (86), AS ESTABLISHED USING G.P.S. METHODS THROUGH THE FRANKLIN COUNTY ENGINEER'S STATIONS "FRANK 72", "FRANK 172", AND "FCGS 5534". TO CONVERT GROUND COORDINATES TO STATE PLANE COORDINATES, APPLY THE PROJECT SCALE FACTOR OF 0.99997668 ABOUT THE ORIGIN POINT (COORDINATE 0.00000, 0.00000).

N

HORIZONTAL SCALE IN FEET
0 50 100 200

CALCULATED LAM
CHECKED LMO

SCHEMATIC PLAN

S.R. 161/ EITERMAN RD. ROUNDABOUT

\\Akrn04\Data\2013\2013945\UNI\80748\roadway\sheets\80748GB001.dgn

REF. LINE	CURVE NAME	P.I. STATION	P.I. NORTHING	P.I. EASTING	DELTA	TANGENT LENGTH (FT.)	LENGTH (FT.)	RADIUS (FT.)	CURVE BEGIN STATION	CURVE END STATION
WNW	N	6072+37.75	769,344.82	1,777,306.60	21°44′19″	86.41	170.73	450.00	PC 6071+51.34	PT 6073+22.08
WWL	Q	6082+39.87	769,313.24	1,777,324.02	14°20′52″	56.64	112.69	450.00	PC 6081+83.23	PT 6082+95.92

REF. LINE	CURVE NAME	P.I. STATION	P.I. NORTHING	P.I. EASTING	DELTA	TANGENT LENGTH (FT.)	LENGTH (FT.)	RADIUS (FT.)	CURVE BEGIN STATION	CURVE END STATION
WEL	H	6040+56.75	769,308.01	1,777,609.63	37°05′03″	33.54	64.72	100.00	PC 6040+23.21	PT 6040+87.93
	I	6041+91.14	769,310.05	1,777,746.36	9°49′53″	103.21	205.91	1200.00	PC 6040+87.93	PT 6042+93.84
WNE	J	6050+43.59	769,449.66	1,777,492.44	39°10′43″	43.59	83.76	122.50	PC 6050+00.00	PT 6050+83.76
	K	6052+17.58	7693,44.81	1,777,635.55	35°54′37″	32.41	62.68	100.00	PC 6051+85.18	PT 6052+47.85
	L	6053+08.58	769,344.29	1,777,728.68	5°37′32″	60.73	121.36	1236.00	PC 6052+47.85	PT 6053+69.21

BEARINGS

C - S 53° 46′ 12″ E (WEL)

* CENTER OF ROUNDABOUT
℄ CONST. S.R. 161, PI STA. 44+65.18
RADIUS = 70.0′

1. ℞ WCC, STA. 6081+03.82 = ℄ S.R. 161, STA. 45+35.18
2. ℞ WCC, STA. 6003+42.15 = ℄ S.R. 161, STA. 43+95.18
3. ℞ WCC, STA. 6000+32.14, 45.00 ′ RT = ℞ WSR, POT STA. 6011+33.23
4. ℞ WCC, STA. 6000+81.65, 32.23′ RT = ℞ WER, PC STA. 6030+00.00
5. ℞ WCC, STA. 6001+20.21, 30.00′ RT = ℞ WEL, POT STA. 6040+00.00
6. ℞ WCC, STA. 6002+81.96, 58.61′ RT = ℞ WNW, PT STA. 6073+22.08
   = ℞ WNE, PC STA. 6049+05.31
7. ℞ WCC, STA. 6003+13.92, 30.00′ RT = ℞ WWL, PT STA. 6082+95.92
8. ℞ WCC, STA. 6003+65.90, 30.00′ RT = ℞ WWR, POT STA. 6092+87.35
9. ℞ WCC, STA. 6004+38.04, 45.00′ RT = ℞ WSL, PT STA. 6111+00.49

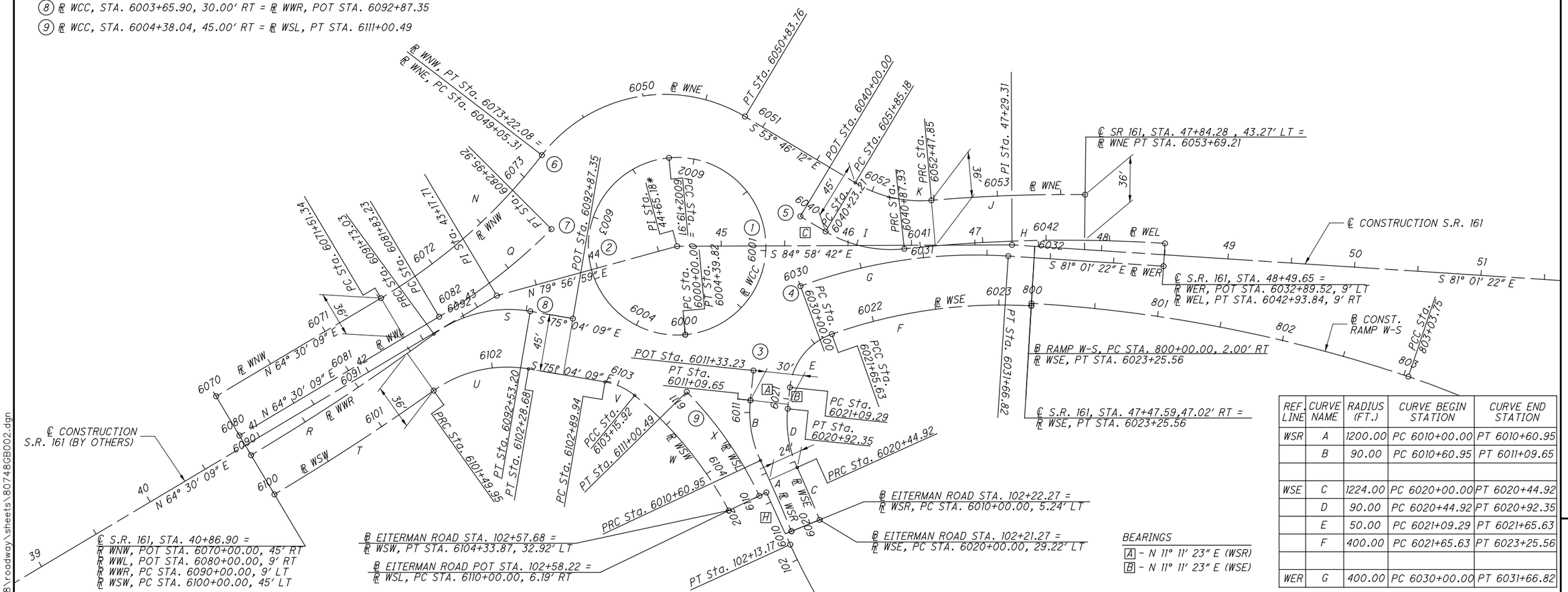

REF. LINE	CURVE NAME	RADIUS (FT.)	CURVE BEGIN STATION	CURVE END STATION
WSR	A	1200.00	PC 6010+00.00	PT 6010+60.95
	B	90.00	PC 6010+60.95	PT 6011+09.65
WSE	C	1224.00	PC 6020+00.00	PT 6020+44.92
	D	90.00	PC 6020+44.92	PT 6020+92.35
	E	50.00	PC 6021+09.29	PT 6021+65.63
	F	400.00	PC 6021+65.63	PT 6023+25.56
WER	G	400.00	PC 6030+00.00	PT 6031+66.82

BEARINGS

A - N 11° 11′ 23″ E (WSR)
B - N 11° 11′ 23″ E (WSE)

REF. LINE	CURVE NAME	P.I. STATION	P.I. NORTHING	P.I. EASTING	DELTA	TANGENT LENGTH (FT.)	LENGTH (FT.)	RADIUS (FT.)	CURVE BEGIN STATION	CURVE END STATION
WWR	R	6090+86.58	769,231.01	1,777,193.40	5°30′27″	86.58	173.03	1800.00	PC 6090+00.00	PT 6091+73.03
	S	6092+15.41	769,297.44	1,777,303.94	45°56′10″	42.38	80.17	100.00	PC 6091+73.03	PT 6092+53.20
WSW	T	6100+75.02	769,193.54	1,777,198.46	4°40′46″	75.02	149.95	1836.00	PC 6100+00.00	PT 6101+49.95
	U	6101+91.48	769,252.12	1,777,299.22	45°06′29″	41.53	78.73	100.00	PC 6101+49.95	PT 6102+28.68
	V	6103+03.23	769,222.21	1,777,411.38	29°46′41″	13.29	25.99	50.00	PC 6102+89.94	PT 6103+15.92
	W	6103+75.67	769,170.83	1,777,463.29	22°31′33″	59.74	117.94	300.00	PC 6103+15.92	PT 6104+33.87
WSL	X	6110+50.72	769,172.71	1,777,494.07	19°11′29″	50.72	100.49	300.00	PC 6110+00.00	PT 6111+00.49

BEARINGS

G - N 40° 10′ 00″ W
H - N 19° 16′ 57″ W

REF. LINE	CURVE NAME	P.I. STATION	P.I. NORTHING	P.I. EASTING	DELTA	TANGENT LENGTH (FT.)	LENGTH (FT.)
WSR	A	6010+30.48	769,124.08	1,777,525.26	2°54′37″	30.48	60.95
	B	6010+85.91	769,176.25	1,777,506.47	31°00′03″	24.96	48.70
WSE	C	6020+22.46	769,123.39	1,777,550.55	2°06′10″	22.46	44.92
	D	6020+69.20	769,167.58	1,777,535.33	30°11′35″	24.28	47.43
	E	6021+40.87	769,239.00	1,777,549.46	64°33′15″	31.58	56.33
	F	6022+46.68	769,266.74	1,777,658.62	22°54′33″	81.05	159.94
WER	G	6030+84.64	769,308.52	1,777,640.69	23°53′43″	84.64	166.82

HORIZONTAL SCALE IN FEET 0 20 40 80

CALCULATED LAM
CHECKED LMO

ROUNDABOUT GEOMETRICS

S.R. 161/ EITERMAN RD. ROUNDABOUT

\\Akrn04\Data\2013\2013945\UNI\80748\roadway\sheets\80748GB002.dgn

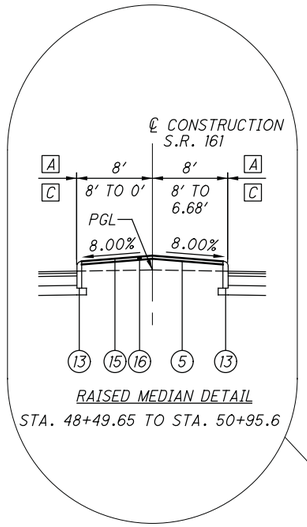

RAISED MEDIAN DETAIL

STA. 48+49.65 TO STA. 50+95.6

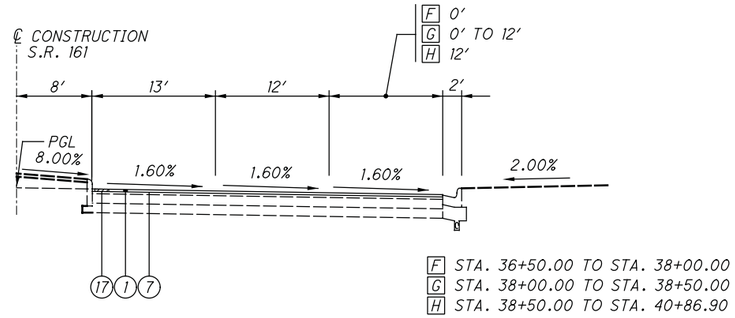

F STA. 36+50.00 TO STA. 38+00.00
G STA. 38+00.00 TO STA. 38+50.00
H STA. 38+50.00 TO STA. 40+86.90

S.R. 161 - PAVEMENT PLANING AND RESURFACING

LIMITING STATIONS

STA. 36+50.00 TO STA. 40+86.90 EASTBOUND

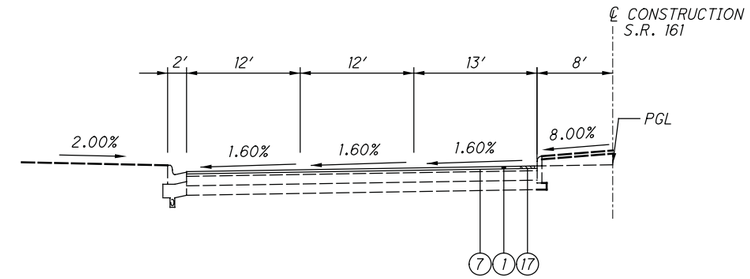

S.R. 161 - PAVEMENT PLANING AND RESURFACING

LIMITING STATIONS

STA. 40+25.00 TO STA. 40+86.90 WESTBOUND

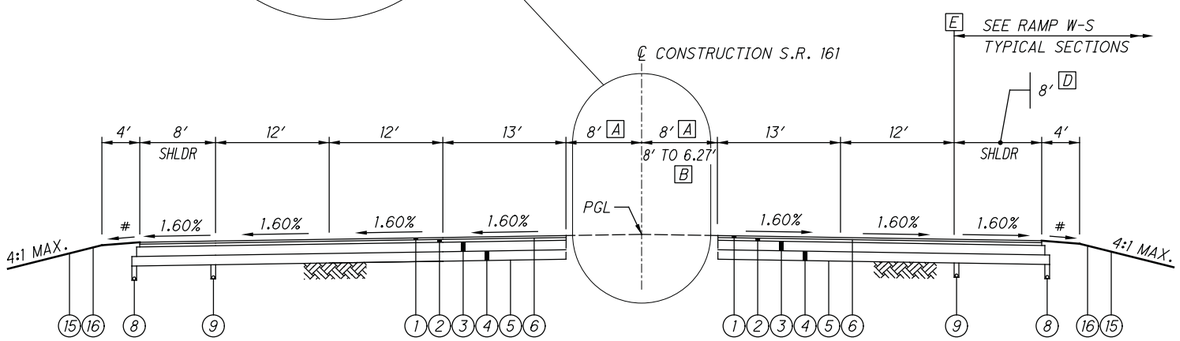

S.R. 161 - NORMAL SECTION

LIMITING STATIONS

STA. 48+49.65 TO STA. 51+10.00

= 4.00%

A STA. 48+49.65 TO STA. 50+50.00
B STA. 50+50.00 TO STA. 51+10.00
C STA. 50+50.00 TO STA. 50+95.6
D STA. 49+30.31 TO STA. 51+10.00

DECELERATION LANE - RAMP W-S

E STA. 48+49.65 TO STA. 49+30.31

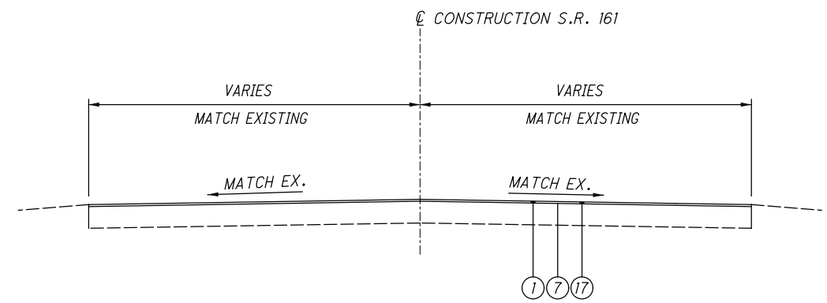

S.R. 161 - PAVEMENT PLANING AND RESURFACING

LIMITING STATIONS

STA. 51+10.00 TO STA. 51+80.00

PROPOSED ITEM LEGEND

1. ITEM 442 - 1 ½″ ASPHALT CONCRETE SURFACE COURSE, 12.5MM, TYPE A (448)
2. ITEM 442 - 1 ¾″ ASPHALT CONCRETE INTERMEDIATE COURSE, 19MM, TYPE A (448)
3. ITEM 302 - 9″ ASPHALT CONCRETE BASE, PG64-22
4. ITEM 304 - 6″ AGGREGATE BASE
5. ITEM 204 - SUBGRADE COMPACTION
6. ITEM 407 - TACK COAT FOR INTERMEDIATE COURSE (SEE GENERAL NOTE)
7. ITEM 407 - TACK COAT (SEE GENERAL NOTE)
8. ITEM 605 - 6″ BASE PIPE UNDERDRAINS (18″ NORMAL DEPTH)
9. ITEM 605 - 6″ SHALLOW PIPE UNDERDRAINS (30″ NORMAL DEPTH)
10. ITEM 609 - COMBINATION CURB AND GUTTER, TYPE 2, AS PER PLAN, SEE SHEET 10
11. ITEM 609 - CURB, MISC., 12″ HEIGHT, SEE SHEET 10
12. ITEM 609 - CURB, TYPE 6
13. ITEM 609 - CURB, TYPE 6, AS PER PLAN, SEE SHEET 10
14. ITEM 609 - COMBINATION CURB AND GUTTER, TYPE 3, AS PER PLAN, SEE SHEET 10
15. ITEM 659 - SEEDING AND MULCHING, AS PER PLAN (SEE GENERAL NOTE)
16. ITEM 659 - 3″ TOPSOIL, AS PER PLAN (SEE GENERAL NOTE)
17. ITEM 254 - 1 ½″ PAVEMENT PLANING, ASPHALT CONCRETE
18. ITEM 605 - 4″ BASE PIPE UNDERDRAINS, AS PER PLAN, SEE SHEET 10
19. SEE BRICK PAVER DETAILS, SHEET 11
20. ITEM 609 - CURB, TYPE 4-C, AS PER PLAN, SEE SHEET 10
21. ITEM 609 - CURB, MISC., 7.5″ HEIGHT, SEE SHEET 10

CALCULATED LAM
CHECKED LMO

TYPICAL SECTIONS - S.R. 161

S.R. 161/ EITERMAN RD. ROUNDABOUT

\\Akrn04\Data\2013\2013945\UNI\80748\roadway\sheets\80748GY001.dgn

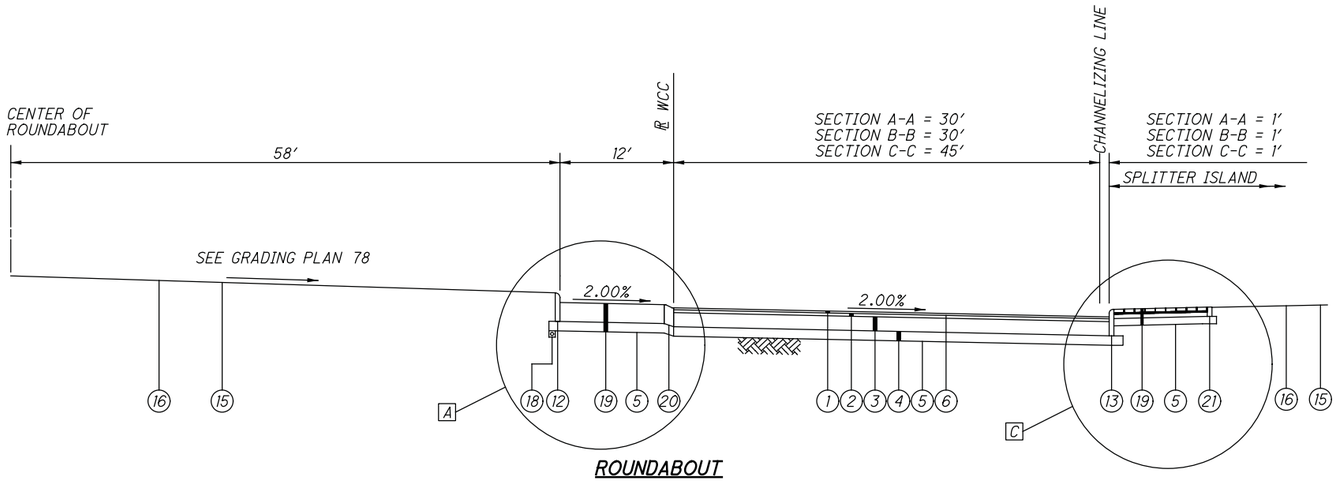

ROUNDABOUT
TYPICAL SECTION A-A, B-B, & C-C

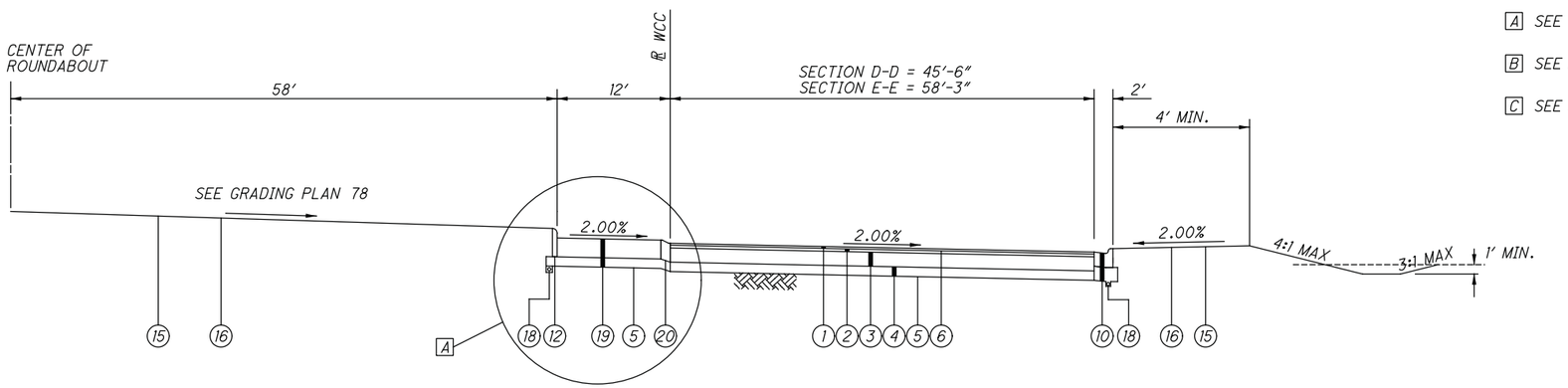

ROUNDABOUT
TYPICAL SECTION D-D, & E-E

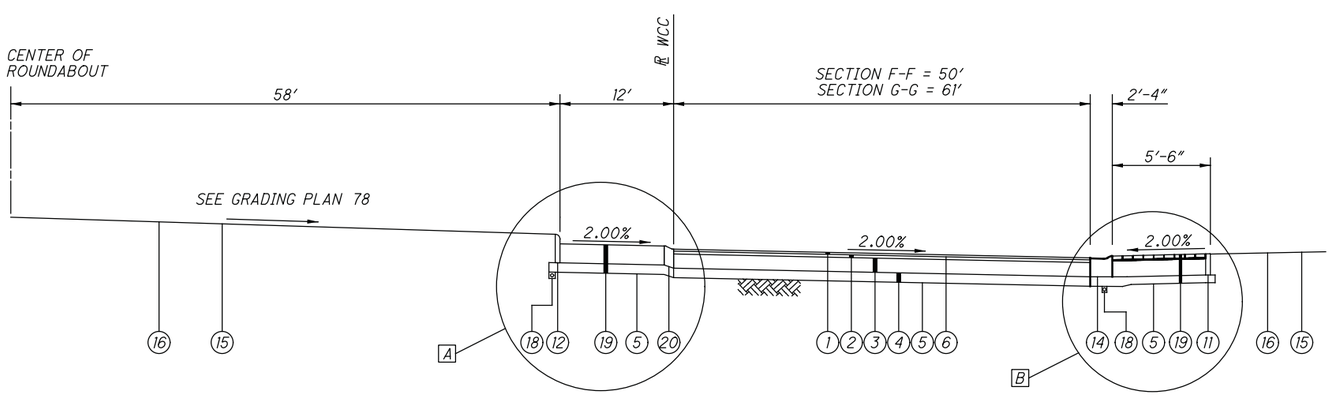

ROUNDABOUT
TYPICAL SECTION F-F & G-G

A SEE CENTRAL ISLAND TRUCK APRON PAVEMENT DETAIL, SHEET 11

B SEE EXTERIOR TRUCK APRON PAVEMENT DETAIL, SHEET 11

C SEE SPLITTER ISLAND PAVERS DETAIL, SHEET 11

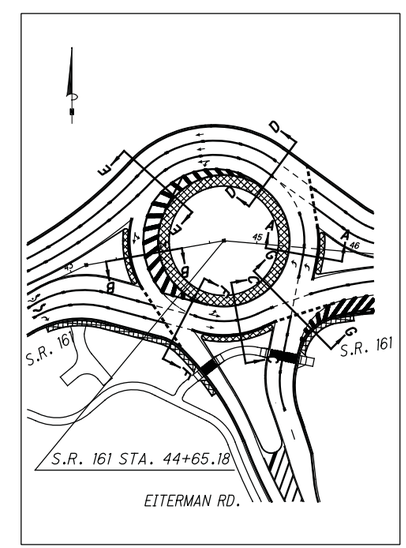

ROUNDABOUT

FOR LEGEND, SEE SHEET 4

CALCULATED LAM
CHECKED LMO

TYPICAL SECTIONS - ROUNDABOUT

S.R. 161/ EITERMAN RD. ROUNDABOUT

\\Akrn04\Data\2013\2013945\UNI\80748\roadway\sheets\80748GY002.dgn

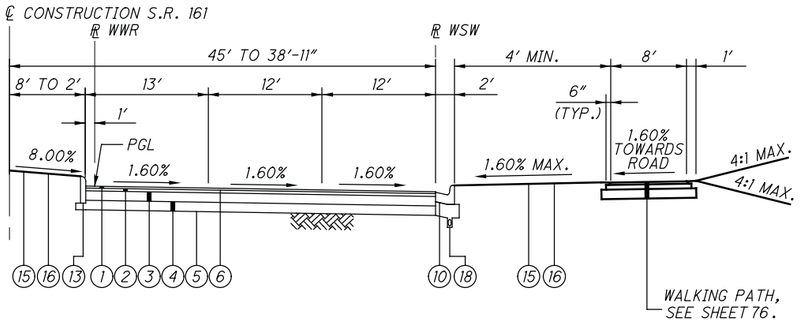

S.R. 161 - ROUNDABOUT

(EASTBOUND APPROACH)
TYPICAL SECTION A-A

LIMITING STATIONS
STA. 6090+00.00 (WWR) TO STA. 6091+47.01 (WWR)

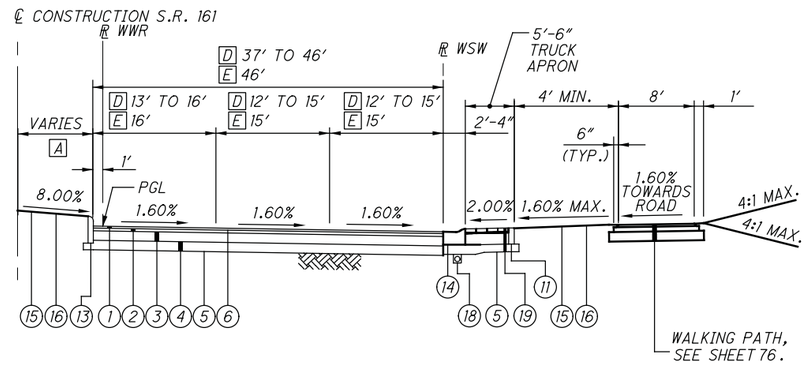

S.R. 161 - ROUNDABOUT

(EASTBOUND APPROACH)
TYPICAL SECTION B-B

LIMITING STATIONS

D STA. 6091+47.01 (WWR) TO STA. 6092+59.46 (WWR)
E STA. 6092+59.46 (WWR) TO STA. 6092+87.35 (WWR)

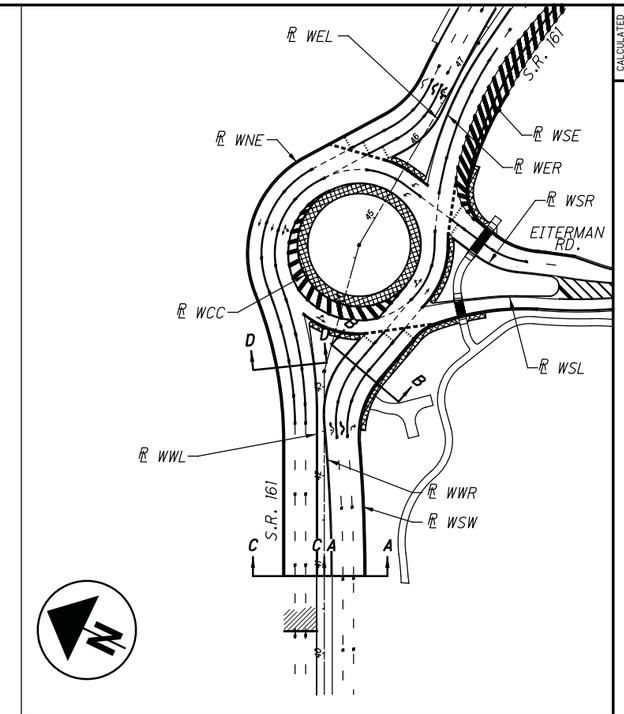

TYPICAL SECTION SCHEMATIC

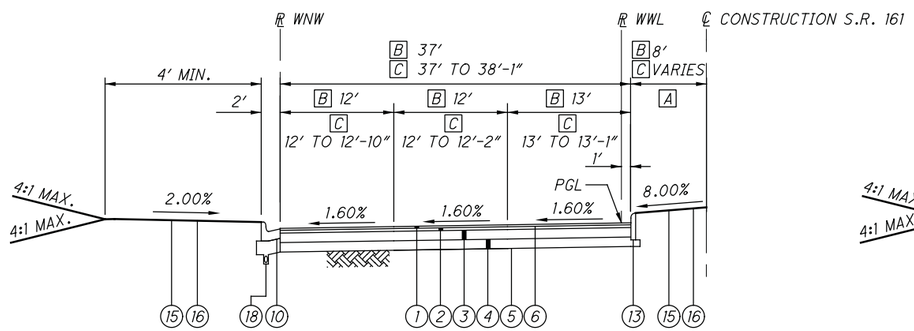

S.R. 161 - ROUNDABOUT

(WESTBOUND DEPARTURE)
TYPICAL SECTION C-C

LIMITING STATIONS

B STA. 6080+00.00 (WWL) TO STA. 6081+51.34 (WWL)
C STA. 6081+51.34 (WWR) TO STA. 6081+83.23 (WWL)

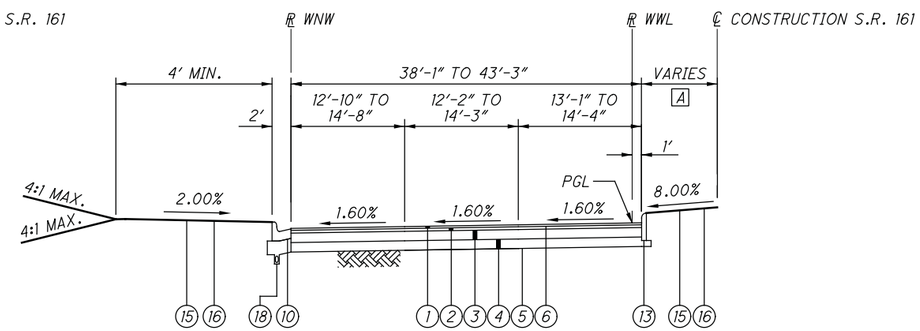

S.R. 161 - ROUNDABOUT

(WESTBOUND DEPARTURE)
TYPICAL SECTION D-D

LIMITING STATIONS

STA. 6081+83.23 (WWL) TO STA. 6082+95.92 (WWR)

A SEE ROUNDABOUT PLAN DETAILS FOR WIDTHS

FOR LEGEND, SEE SHEET 4

CALCULATED LAM
CHECKED LMO

TYPICAL SECTIONS - ROUNDABOUT

S.R. 161/EITERMAN RD. ROUNDABOUT

\\Akrn04\Data\2013\2013945\UNI\80748\roadway\sheets\80748GY003.dgn

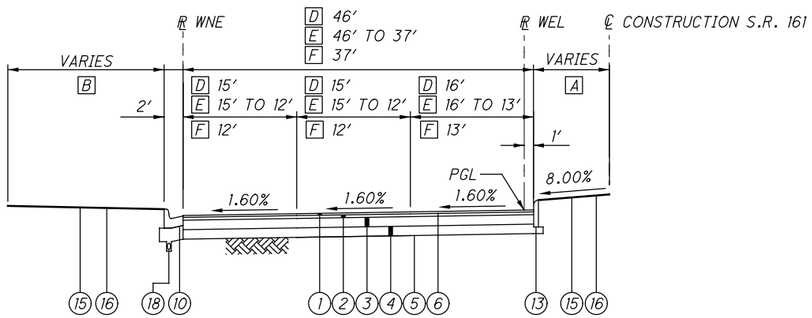

S.R. 161 - ROUNDABOUT

(WESTBOUND APPROACH)
TYPICAL SECTION A-A

LIMITING STATIONS

D STA. 6040+00.00 (WEL) TO STA. 6040+23.44 (WEL)
E STA. 6040+23.44 (WEL) TO STA. 6041+12.52 (WEL)
F STA. 6041+12.52 (WEL) TO STA. 6041+51.19 (WEL)

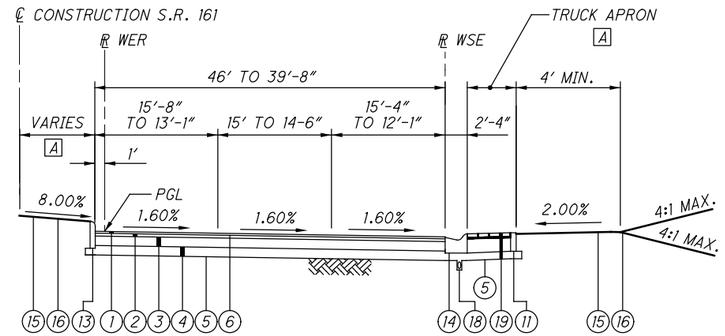

S.R. 161 - ROUNDABOUT

(EASTBOUND DEPARTURE)
TYPICAL SECTION C-C

LIMITING STATIONS

STA. 6030+00.00 (WER) TO STA. 6031+66.82 (WER)

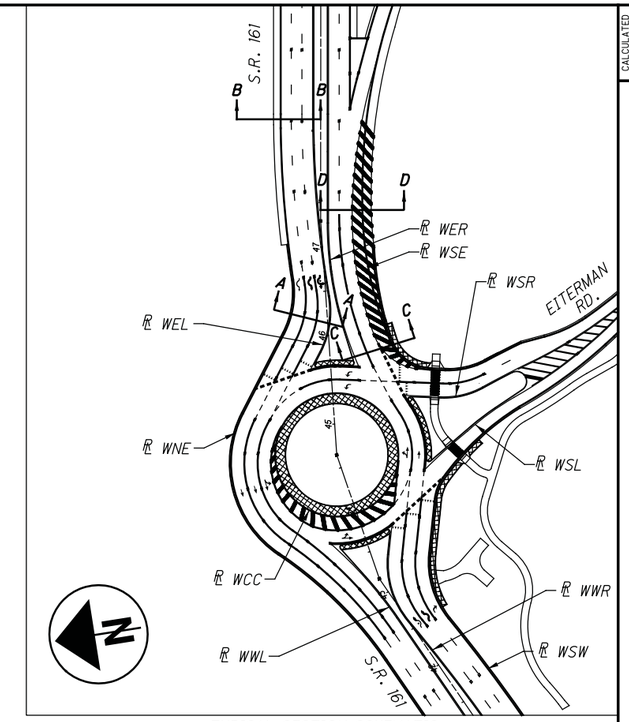

TYPICAL SECTION SCHEMATIC

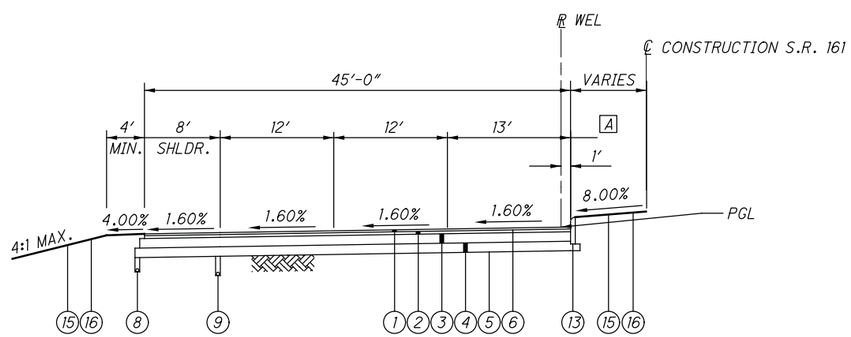

S.R. 161 - ROUNDABOUT

(WESTBOUND APPROACH)
TYPICAL SECTION B-B

LIMITING STATIONS

STA. 6041+51.19 (WEL) TO STA. 6042+93.84 (WEL)

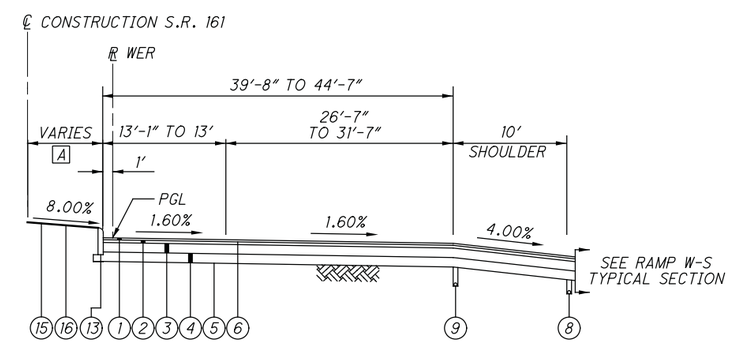

S.R. 161 - ROUNDABOUT

(EASTBOUND DEPARTURE)
TYPICAL SECTION D-D

LIMITING STATIONS

STA. 6031+66.82 (WER) TO STA. 6032+89.52 (WER)

A SEE ROUNDABOUT PLAN DETAILS FOR WIDTHS

B SEE GRADING PLAN FOR DETAILS

C NOT USED

FOR LEGEND, SEE SHEET 4

CALCULATED LAM
CHECKED LMO

TYPICAL SECTIONS - ROUNDABOUT

S.R. 161/EITERMAN RD. ROUNDABOUT

\\Akrn04\Data\2013\2013945\UNI\80748\roadway\sheets\80748GY004.dgn

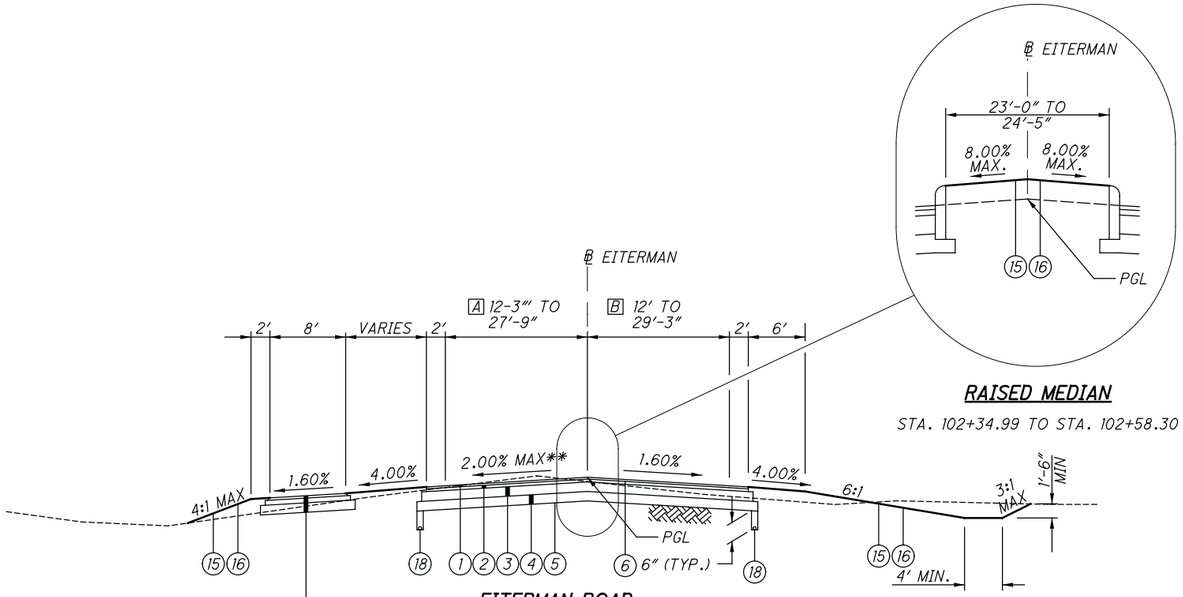

RAISED MEDIAN

STA. 102+34.99 TO STA. 102+58.30

EITERMAN ROAD

(NORTHBOUND APPROACH)
TYPICAL SECTION A-A

LIMITING STATIONS

A STA. 100+14.00 TO STA. 102+22.27
B STA. 100+14.00 TO STA. 102+58.30*

* LANE WIDTHS DO NOT INCLUDE RAISED MEDIAN WIDTH. SEE DETAIL FOR MEDIAN WIDTH.

** ROADWAY CROSS SLOPE -
1.60% FROM STA. 100+14.00 TO STA. 102+08.57
TRANSITIONS FROM 1.60% TO 2.00% STA. 102+08.57 TO STA. 102+38.59
2.00% FROM STA. 102+38.59 TO STA. 102+58.30

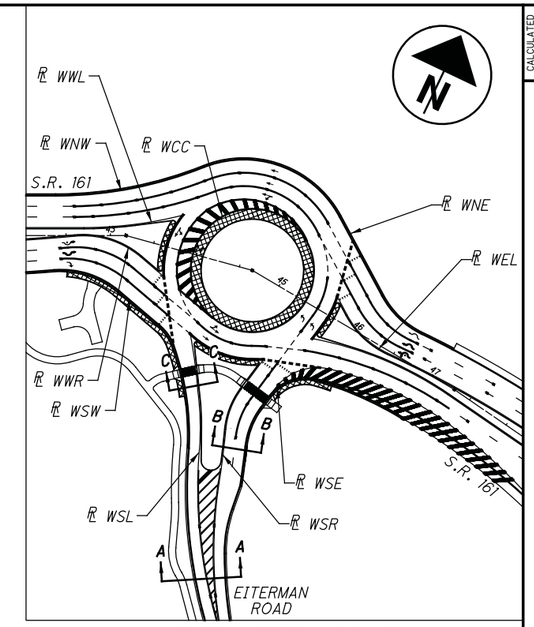

TYPICAL SECTION SCHEMATIC

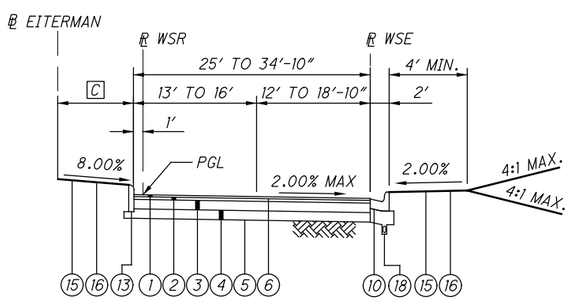

EITERMAN ROAD - ROUNDABOUT

(NORTHTBOUND APPROACH)
TYPICAL SECTION B-B

LIMITING STATIONS

STA. 6010+00.00 (WSR) TO STA. 6011+33.23 (WSR)

C SEE ROUNDABOUT PLAN DETAILS FOR WIDTHS

D SEE EXTERIOR TRUCK APRON PAVEMENT DETAIL, SHEET 11

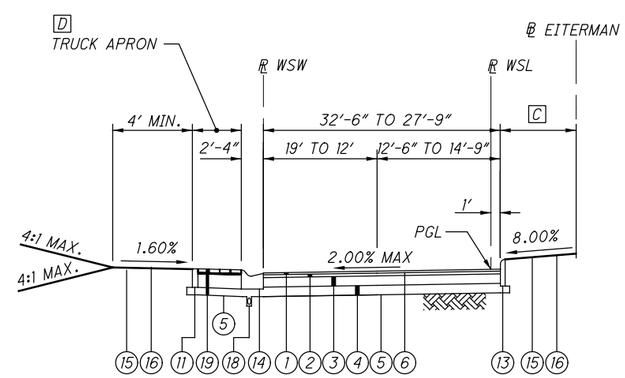

EITERMAN ROAD - ROUNDABOUT

(SOUTHBOUND DEPARTURE)
TYPICAL SECTION C-C

LIMITING STATIONS

STA. 6110+00.00 (WSL) TO STA. 6111+00.49 (WSL)

FOR LEGEND, SEE SHEET 4

CALCULATED LAM
CHECKED LMO

TYPICAL SECTIONS - ROUNDABOUT

S.R. 161/EITERMAN RD. ROUNDABOUT

\\Akrn04\Data\2013\2013945\UNI\80748\roadway\sheets\80748GY005.dgn

E 7.00% MAX BREAK

F VARIES 4.00% TO 2.70%

G 4.00% OR RATE OF SUPERELEVATION, WHICHEVER IS GREATER

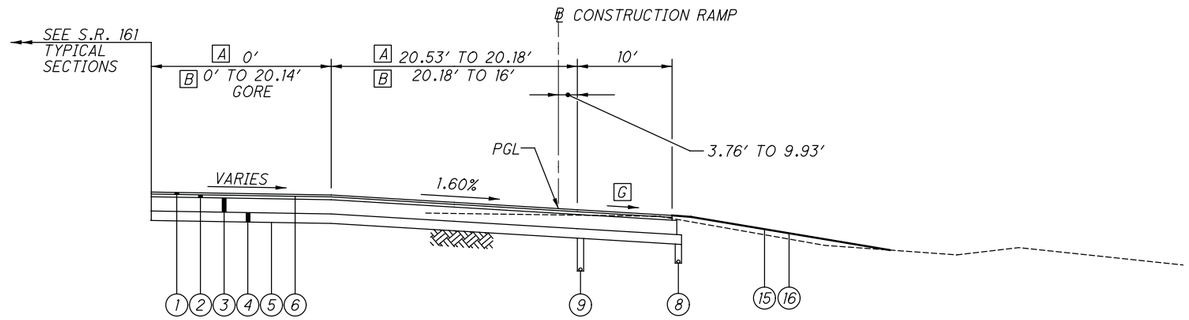

NORMAL SECTION - RAMP W-S

DECELERATION LANE / S.R. 161 GORE AREA

LIMITING STATIONS

STA. 801+02.18 TO STA. 801+87.20

A STA. 801+02.18 TO STA. 801+06.69
B STA. 801+06.69 TO STA. 801+87.20

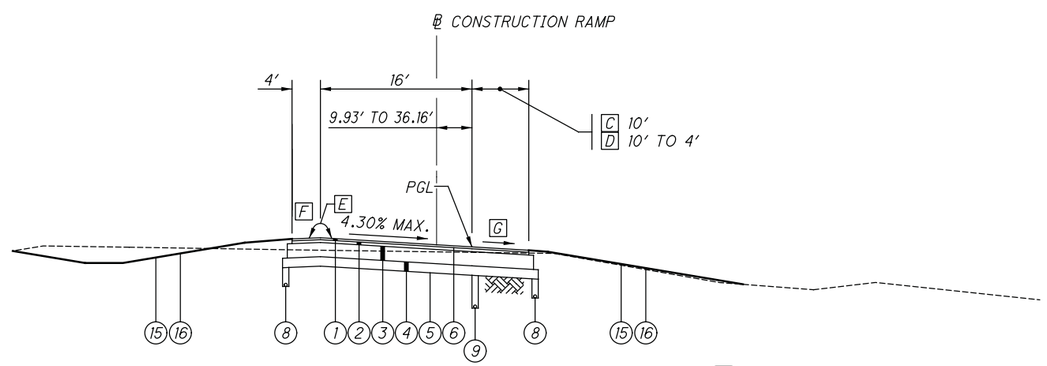

SUPERELEVATED SECTION - RAMP W-S

LIMITING STATIONS

STA. 801+87.20 TO STA. 803+58.26

C STA. 801+87.20 TO STA. 802+05.97
D STA. 802+05.97 TO STA. 803+58.26

FOR LEGEND, SEE SHEET 4

CALCULATED LAM
CHECKED LMO

TYPICAL SECTIONS - RAMPS

S.R. 161/ EITERMAN RD. ROUNDABOUT

\\Akrn04\Data\2013\2013945\UNI\80748\roadway\sheets\80748GY006.dgn

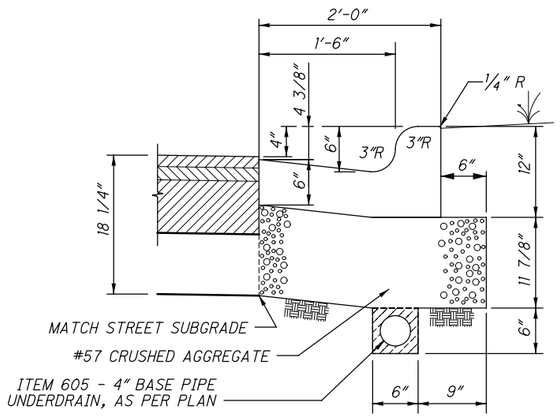

ITEM 609 - COMBINATION CURB AND GUTTER,
TYPE 2, AS PER PLAN DETAIL

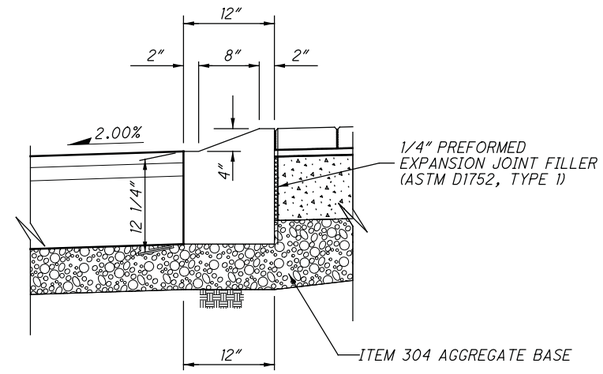

ITEM 609 - CURB, TYPE 4-C,
AS PER PLAN DETAIL

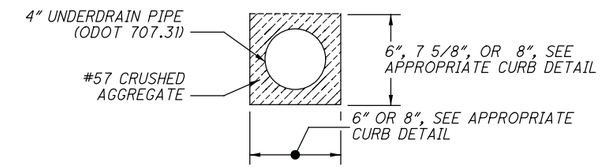

ITEM 605 - 4" BASE PIPE UNDERDRAINS, AS PER PLAN
ITEM 605 - 4" UNCLASSIFIED PIPE UNDERDRAINS, AS PER PLAN

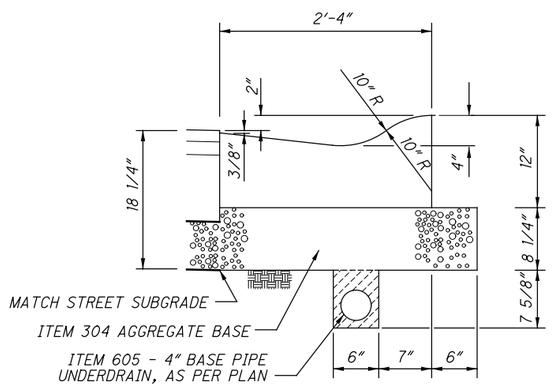

ITEM 609 - COMBINATION CURB AND GUTTER,
TYPE 3, AS PER PLAN DETAIL

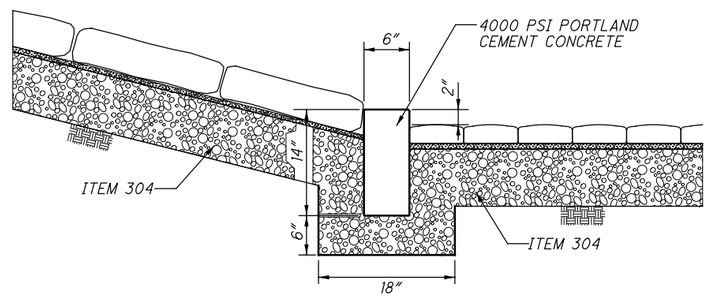

ITEM 609 - CURB, MISC., 14" HEIGHT,
AS PER PLAN DETAIL

SEE HARDSCAPE PLANS, SHEETS 126 - 128

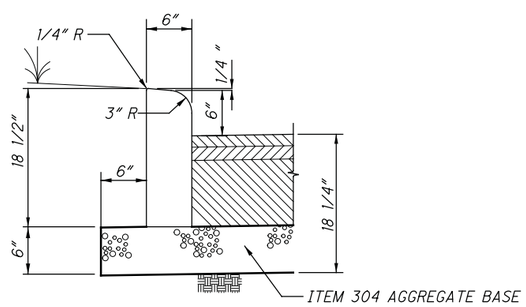

ITEM 609 - CURB,
TYPE 6, AS PER PLAN DETAIL

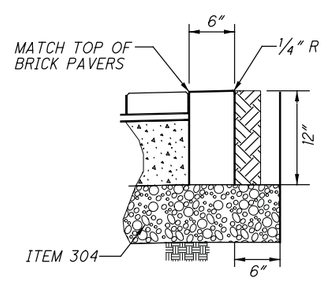

ITEM 609 - CURB, MISC., 12" HEIGHT,
AS PER PLAN DETAIL

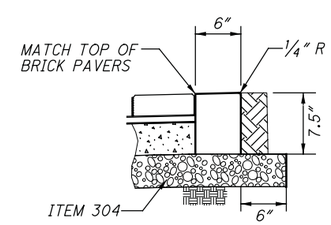

ITEM 609 - CURB, MISC., 7.5" HEIGHT,
AS PER PLAN DETAIL

CALCULATED LAM
CHECKED LMO

TYPICAL DETAILS

S.R. 161/ EITERMAN RD.
ROUNDABOUT

\\Akrn04\Data\2013\2013945\UNI\80748\roadway\sheets\80748GY007.dgn

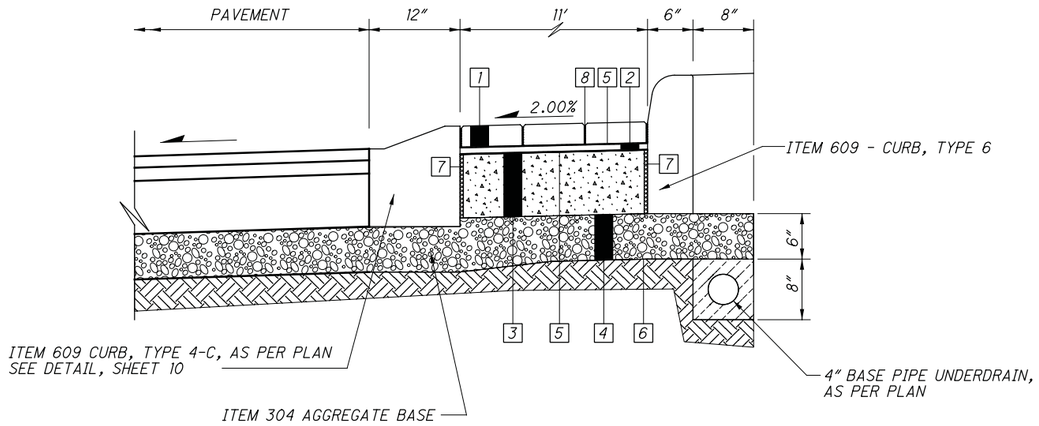

CENTRAL ISLAND TRUCK APRON PAVEMENT DETAIL

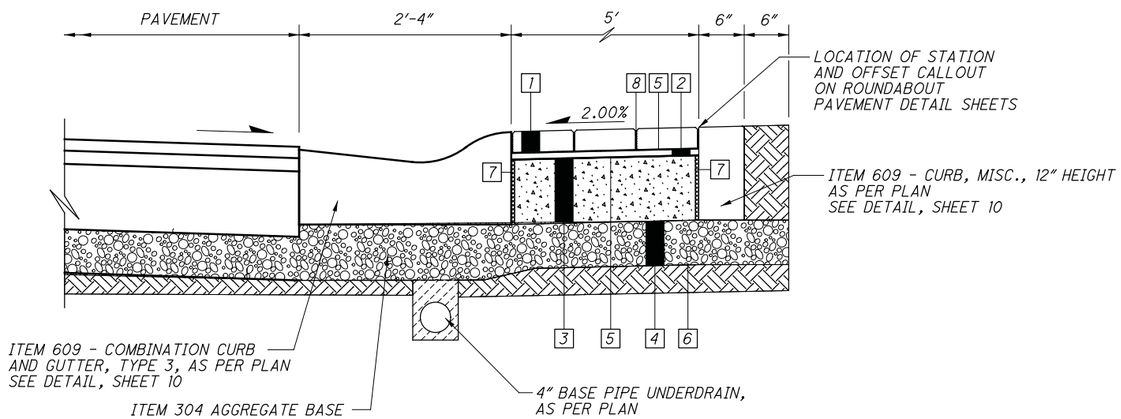

EXTERIOR TRUCK APRON PAVEMENT DETAIL

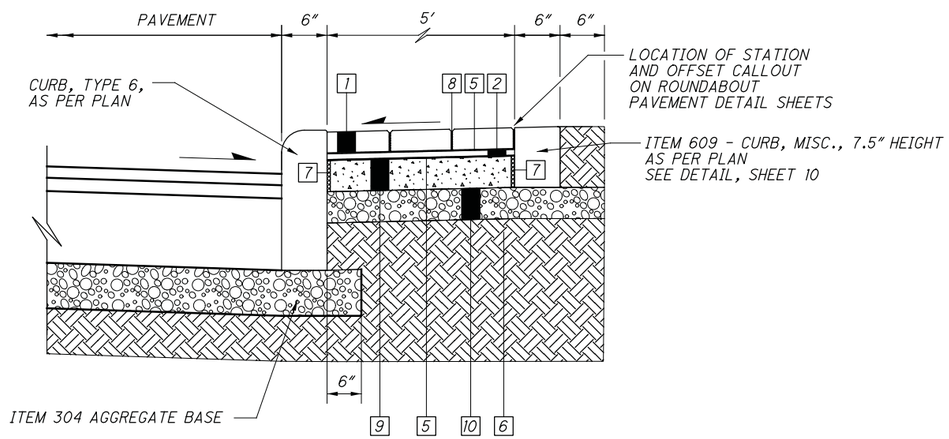

SPLITTER ISLAND PAVERS DETAIL

LEGEND

1. 8" x 4" x 2 ¾" BRICK PAVERS (SEE NOTE BELOW FOR DETAILS)
2. ¾" BITUMINOUS ASPHALT SETTING BED (PG64-22)
3. 8 ½" CLASS "C" CONCRETE BASE
4. 6" AGGREGATE BASE (304)
5. NEOPRENE - MODIFIED ASPHALT ADHESIVE
6. SUBGRADE COMPACTION
7. ¼" PREFORMED EXPANSION JOINT FILLER (ASTM D1752, TYPE 1)
8. 1/16" MIN. - ⅜" MAX. SAND FILLED JOINTS (ASTM C33 JOINT SAND STABILIZER)
9. 4" CLASS "C" CONCRETE BASE
10. 4" AGGREGATE BASE (304)

ITEM SPECIAL - MISC.: TRUCK APRON PAVEMENT
ITEM SPECIAL - MISC.: PAVERS

PAVERS: THE PAVERS SHALL BE REGIMENTAL FULL RANGE WITH A CHAMFERED EDGE AND SPACER LUGS, 8" x 4" x 2-3/4", MADE BY BELDEN BRICK COMPANY, CANTON, OHIO, LAID IN A RUNNING BOND PATTERN.

NEOPRENE-MODIFIED ASPHALT ADHESIVE: FURNISH NEOPRENE MODIFIED ASPHALT ADHESIVE THAT CONTAINS 2% GRADE WM1 NEOPRENE, OXIDIZED ASPHALT WITH A 150 DEGREE SOFTENING POINT (77 PENETRATION), AND 10% LONG-FIBERED INERT MATERIAL, AS SUPPLIED BY SEIDEL COMPANY, INC., NEWBURYPORT, MA, (617) 649-6740; HASTINGS PAVEMENT COMPANY, INC., LAKE SUCCESS, NY, (516) 379-3500; OR APPROVED EQUAL.

BITUMINOUS SETTING BED, 3/4 INCH: FURNISH ASPHALT CEMENT CONFORMING TO ASTM D 3381, PG64-22. FINE AGGREGATE SHALL BE NATURAL SAND AND/OR STONE SAND COMPOSED OF HARD, DURABLE, UNCOATED PARTICLES, FREE FROM CLAY, SILT, ORGANIC MATERIAL, OR OTHER DELETERIOUS SUBSTANCES. ALL SAND SHALL BE UNIFORMLY GRADED AND PASS A NO. 4 SIEVE, MEETING THE REQUIREMENTS OF ASTM C 136. THE DRIED FINE AGGREGATE SHALL BE MIXED WITH HOT ASPHALT CEMENT AT THE PLANT AND HEATED TO APPROXIMATELY 300 DEGREES (F). APPROXIMATE MATERIAL PROPORTIONS SHALL BE 7% ASPHALT CEMENT AND 93% FINE AGGREGATE; OR 140 LBS ASPHALT TO 1,860 LBS FINE AGGREGATE PER TON.

SAND: ALL JOINTS SHALL BE FILLED WITH A POLYMERIC SAND. SAND SHALL BE ALLIANCE GATOR MAXX POLYMERIC SAND FOR OVERLAYS AND SLATE GREY IN COLOR OR AN APPROVED EQUAL.

EDGING: A BRICK/PAVER EDGING SHALL BE PROVIDED ALONG ANY PAVER EDGE NOT RESTRAINED BY CURB, CURB-AND-GUTTER, SIDEWALK, SHARED-USE PATH, ETC. EDGING TO BE PERMALOC ASPHALT EDGE, BLACK, 3" x 3" OR APPROVED EQUAL.

PAYMENT: PAYMENT FOR THE WORK NOTED ABOVE WILL BE MADE AT THE UNIT PRICE BID PER SQUARE FOOT FOR ITEM SPECIAL - TRUCK APRON PAVEMENT AND ITEM SPECIAL - PAVERS AND SHALL INCLUDE THE SUBGRADE COMPACTION, AGGREGATE BASE, CONCRETE BASE SLAB, BITUMINOUS SETTING BED, ASPHALT ADHESIVE, BRICK PAVERS, EDGING AND SAND FILL. THE COST OF ALL CONCRETE CURBING WILL BE PAID UNDER THE APPROPRIATE 609 CURB ITEM.

CALCULATED LAM
CHECKED LMO

TYPICAL SECTIONS

S.R. 161/ EITERMAN RD.
ROUNDABOUT

\\Akrn04\Data\2013\2013945\UNI\80748\roadway\sheets\80748GY008.dgn

TABLE A

SUBGRADE STABILIZATION QUANTITY TABLE

SUBGRADE STABILIZATION				206	206
				LIME KILN DUST STABILIZED SUBGRADE, 16 INCHES DEEP, AS PER PLAN	MIXTURE DESIGN FOR CHEMICALLY STABILIZED SOILS
				SY	LUMP
ROADWAY	STATION		AREA		
	FROM	TO	SQ. FT.		
S.R. 161 (WEST LEG)	40+86.90	43+64.19	26675	2963.9	
WCC (ROUNDABOUT)	6000+00.00	6004+39.82	31603	3511.4	
S.R. 161 (EAST LEG AND RAMP W-S)	45+66.19	51+10.00	62981	6997.9	
EITERMAN ROAD (SOUTH LEG)	100+14.00	WCC	16987	1887.4	
TOTALS CARRIED TO GENERAL SUMMARY				15,361	1

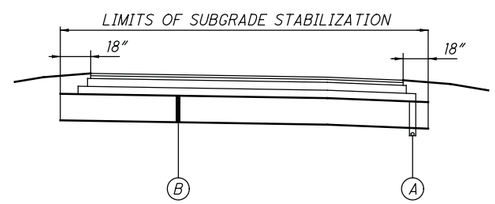

LIME KILN DUST STABILIZATION SECTION - SHOULDER

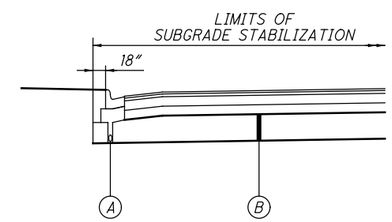

LIME KILN DUST STABILIZATION SECTION - CURB AND GUTTER

LEGEND

(A) ITEM 605 PIPE UNDERDRAIN

(B) ITEM 206 LIME KILN DUST STABILIZED SUBGRADE, 16" DEEP, AS PER PLAN

CALCULATED LAM CHECKED LMO

SUBGRADE STABILIZATION DETAILS

S.R. 161/ EITERMAN RD. ROUNDABOUT

\\Akrn04\Data\2013\2013945\UNI\80748\roadway\sheets\80748GA005.dgn

GENERAL - ODOT

SPECIFICATIONS

THE STANDARD SPECIFICATIONS OF THE STATE OF OHIO, DEPARTMENT OF TRANSPORTATION, INCLUDING CHANGES AND SUPPLEMENTAL SPECIFICATIONS LISTED IN THE PROPOSAL SHALL GOVERN THIS IMPROVEMENT. ITEM NUMBERS LISTED REFER TO ODOT ITEM NUMBERS UNLESS OTHERWISE NOTED.

UTILITIES

LISTED BELOW ARE ALL UTILITIES LOCATED WITHIN THE PROJECT CONSTRUCTION LIMITS TOGETHER WITH THEIR RESPECTIVE OWNERS:

WATER:

CITY OF DUBLIN
5800 SHIER-RINGS ROAD
DUBLIN, OH 43017
TEL: (614) 410-4621
CONTACT: MIKE SWEDER

CITY OF COLUMBUS
910 DUBLIN ROAD
COLUMBUS, OH 43215
TEL: (614) 645-7788

CITY OF MARYSVILLE
WATER DEPARTMENT
455 NORTH MAPLE STREET
MARYSVILLE, OH 43040
TEL: (937) 645-7330
CONTACT: SCOTT SHEPPEARD

TELEPHONE AND FIBER OPTIC:

AT&T
111 NORTH 4TH STREET
ROOM 802
COLUMBUS, OH 43215
TEL: (614) 223-6783
CONTACT: MIKE LEE

FRONTIER COMMUNICATIONS
2780 LIBERTY ROAD
DELAWARE, OH 43015
TEL: (740) 369-0826
CELL: (740) 802-8890
CONTACT: ROBERT CHANDLER

CABLE TV AND FIBER OPTIC:

TIME WARNER CABLE
3760 INTERCHANGE DRIVE
COLUMBUS, OH 43204
TEL: (614) 481-5262
CELL: (614) 348-2979
CONTACT: RAY MAURER

DUBLINK (TEAM FISHEL)
1600 WALCUTT ROAD
COLUMBUS, OH 432228
TEL: (614) 921-8620
CONTACT: JOE TEPPER

ELECTRIC:

AMERICAN ELECTRIC POWER
850 TECH CENTER DRIVE
GAHANNA, OH 43230
TEL: (614) 883-6831
CELL: (614) 949-8883
CONTACT: PAUL PAXTON

GAS:

COLUMBIA GAS OF OHIO
3550 JOHNNY APPLESEED CT.
COLUMBUS, OH 43230
TEL: (614) 818-2108
CELL: (614) 370-1906
CONTACT: ROB CALDWELL

TRAFFIC:

OHIO DEPARTMENT OF TRANSPORTATION
ODOT #6
400 EAST WILLIAM STREET
DELAWARE, OH 43015
TEL: (740) 833-8198
CONTACT: KRAIG SHREWSBERRY

STORM SEWERS:

CITY OF DUBLIN
5800 SHIER-RINGS ROAD
DUBLIN, OH 43017
TEL: (614) 410-4621
CONTACT: MIKE SWEDER

OHIO DEPARTMENT OF TRANSPORTATION
ODOT #6
400 EAST WILLIAM STREET
DELAWARE, OH 43015
TEL: (740) 833-8000

CITY OF MARYSVILLE
WASTEWATER DEPARTMENT
14901 BEECHER-GAMBLE ROAD
MARYSVILLE, OH 43040
TEL: (937) 642-1036
CONTACT: RICK VARNER

CITY OF COLUMBUS
1250 FAIRWOOD AVENUE
COLUMBUS, OH 43206
TEL: (614) 645-6290
CONTACT: HERB JOHNSON

ROUNDING

THE ROUNDING AT SLOPE BREAKPOINTS SHOWN ON THE TYPICAL SECTIONS APPLY TO ALL CROSS-SECTIONS EVEN THOUGH OTHERWISE SHOWN.

EXISTING PLANS

THE FOLLOWING EXISTING PLANS MAY BE INSPECTED IN THE CITY OF DUBLIN, DIVISION OF ENGINEERING OFFICE, DUBLIN, OHIO.

UNI-161-12.98 (06-009-CIP) (2009)

ELEVATION DATUM

ALL ELEVATIONS ARE BASED ON NAVD 88.

WORK LIMITS

THE WORK LIMITS SHOWN ON THESE PLANS ARE FOR PHYSICAL CONSTRUCTION ONLY. PROVIDE THE INSTALLATION AND OPERATION OF ALL WORK ZONE TRAFFIC CONTROL AND WORK ZONE TRAFFIC CONTROL DEVICES REQUIRED BY THESE PLANS WHETHER INSIDE OR OUTSIDE THESE WORK LIMITS.

PROTECTION OF RIGHT-OF-WAY LANDSCAPING

PRIOR TO BEGINNING WORK, THE CONTRACTOR AND THE CITY ENGINEER WILL REVIEW AND RECORD ALL LANDSCAPING ITEMS WITHIN THE RIGHT OF WAY (BOTH WITHIN AND OUTSIDE THE CONSTRUCTION LIMITS). A RECORD OF THIS REVIEW WILL BE KEPT IN THE CITY ENGINEER'S FILES. PRIOR TO FINAL ACCEPTANCE, A FINAL REVIEW OF LANDSCAPING ITEMS WILL BE MADE.

CONSTRICT ALL ACTIVITIES, EQUIPMENT STORAGE, AND STAGING TO WITHIN THE CONSTRUCTION LIMITS. THE CONSTRUCTION LIMITS ARE IDENTIFIED IN THE PLANS. WHERE THEY ARE NOT SHOWN, THE LIMITS ARE IDENTIFIED AS 40 FEET FROM THE EDGE OF PAVEMENT.

SUBMIT A WRITTEN REQUEST TO THE CITY ENGINEER TO USE ANY AREA OUTSIDE THESE LIMITS. THE DOCUMENT SUBMITTED MUST CLEARLY IDENTIFY THE AREA AND EXPLAIN THE PROPOSED USE AND RESTORATION OF THE AREA. USE OF THESE AREAS FOR DISPOSAL OF WASTE MATERIAL AND CONSTRUCTION DEBRIS, EXCAVATION OF BORROW MATERIAL AND PLACEMENT OF PORTABLE PLANTS IS PROHIBITED. THE REQUEST MUST BE APPROVED, IN WRITING, BEFORE THE CONTRACTOR HAS PERMISSION TO USE THE AREA.

ANY ITEMS DAMAGED BEYOND THE CONSTRUCTION LIMITS AS DEFINED ABOVE WILL BE REPLACED IN KIND OR AS APPROVED BY THE CITY ENGINEER.

HOURS OF OPERATION

ACTIVITIES AND LAND USE ADJACENT TO THIS PROJECT MAY BE AFFECTED BY CONSTRUCTION NOISE. IN ORDER TO MINIMIZE ANY ADVERSE CONSTRUCTION NOISE IMPACTS, DO NOT OPERATE POWER-OPERATED CONSTRUCTION-TYPE DEVICES BETWEEN THE HOURS OF 9:00 PM AND 7:00 AM, UNLESS PERMITTED BY THE CITY OF DUBLIN. IN ADDITION, DO NOT OPERATE AT ANY TIME ANY DEVICE IN SUCH A MANNER THAT THE NOISE CREATED SUBSTANTIALLY EXCEEDS THE NOISE CUSTOMARILY AND NECESSARILY ATTENDANT TO THE REASONABLE AND EFFICIENT PERFORMANCE OF SUCH EQUIPMENT.

ENVIRONMENTAL COMMITMENTS

WATERWAY PERMIT COMPLIANCE

THE APPROPRIATE WATERWAY PERMIT(S) FOR THIS PROJECT HAVE YET TO BE AUTHORIZED BY THE US ARMY CORPS OF ENGINEERS AND/OR THE OHIO ENVIRONMENTAL PROTECTION AGENCY. THE CONTRACTOR SHALL NOT PERFORM ANY WORK IN AND/OR PLACE ANY FILL IN WETLANDS UNTIL THE FINAL APPROPRIATE WATERWAY PERMIT(S) ARE AUTHORIZED BY THE US ARMY CORPS OF ENGINEERS AND THE OHIO ENVIRONMENTAL PROTECTION AGENCY. THE COMPLETE/AUTHORIZED WATERWAY PERMIT(S) WILL BE PROVIDED TO THE CONTRACTOR BY THE CITY OF DUBLIN AS SOON AS THEY BECOME AVAILABLE.

WATER QUALITY PROTECTION

THE CONTRACTOR SHALL TAKE ALL NECESSARY PRECAUTIONS IN THE STORAGE AND DISPENSING OF HAZARDOUS MATERIALS TO PREVENT ANY CONTAMINATION OF BODIES OF WATER WITHIN THE PROJECT AREA. NO FILLING OF EQUIPMENT OR STORAGE OF MATERIALS SHALL OCCUR WITHIN THE 100 YEAR FLOOD PLAINS OF THE SOUTH FORK INDIAN RUN AND GORDON TRI-COUNTY DITCH.

ROADWAY

CLEARING AND GRUBBING

ALTHOUGH THERE ARE NO TREES OR STUMPS SPECIFICALLY MARKED FOR REMOVAL WITHIN THE LIMITS OF THE PROJECT, A LUMP SUM QUANTITY IS INCLUDED IN THE GENERAL SUMMARY FOR ITEM 201, CLEARING AND GRUBBING. ALL PROVISIONS AS SET FORTH IN THE SPECIFICATIONS UNDER THIS ITEM ARE INCLUDED IN THE LUMP SUM PRICE BID FOR ITEM 201, CLEARING AND GRUBBING.

FENCE LENGTHS

THE LENGTHS OF FENCE SHOWN IN THE PLANS ARE HORIZONTAL DIMENSIONS. MEASUREMENTS OF THE FINAL QUANTITIES WILL BE IN ACCORDANCE WITH ITEM 607.

MONUMENT ASSEMBLIES

CONSTRUCT MONUMENT ASSEMBLIES IN ACCORDANCE WITH THE DETAILS SHOWN ON THE STANDARD CONSTRUCTION DRAWINGS AND AT THE LOCATIONS SHOWN BELOW.

℄ MONUMENT ASSEMBLY BOXES
TO BE SET DURING CONSTRUCTION

S.R. 161 STA.	OFFSET	MON. BOX
43+17.71	℄	1
44+65.18	℄	1
47+29.31	℄	1

THE FOLLOWING QUANTITY HAS BEEN INCLUDED IN THE GENERAL SUMMARY FOR THESE ITEMS.

ITEM 623, MONUMENT ASSEMBLY 3 EACH

SAW CUTTING OF ASPHALT PAVEMENT

THE LABOR AND MATERIAL REQUIRED TO SAW CUT FULL-DEPTH ASPHALT PAVEMENT FOR REMOVAL UNDER ITEM 203 EXCAVATION, OR FOR INSTALLATION OF ITEM 611 CONDUIT OR CULVERTS, FOR ITEM 611 DRAINAGE STRUCTURES, OR ITEM 638 WATER MAINS, SHALL BE CONSIDERED INCIDENTAL TO AND INCLUDED IN THE CONTRACT UNIT PRICE FOR THE RESPECTIVE ITEM.

CONDUIT CONSTRUCTION

IN FILL AREAS, WHERE CONDUIT IS TO BE LOCATED IN PROPOSED EMBANKMENT, THE CONTRACTOR SHALL CONSTRUCT THE EMBANKMENT PRIOR TO PLACEMENT OF THE PROPOSED CONDUIT.

EARTHWORK QUANTITIES

ITEM 203 EXCAVATION AND ITEM 203 EMBANKMENT QUANTITIES, AS PROVIDED IN THE GENERAL SUMMARY, HAVE NOT BEEN ADJUSTED TO REFLECT SOIL STABILIZATION QUANTITIES.

\\Akrn04\Data\2013\2013945\UNI\80748\roadway\sheets\80748GN001.dgn

AMERICANS WITH DISABILITIES ACT (ADA)
ITEM 608 - CURB RAMP, AS PER PLAN
ITEM 608 - CURB RAMP, MISC.: DETECTABLE WARNING, (BY SIZE)

ALL SIDEWALKS, PEDESTRIAN PATHS, CURB RAMPS, AND DRIVEWAYS SHALL BE CONSTRUCTED IN ACCORDANCE WITH THE LATEST STANDARDS OF THE AMERICANS WITH DISABILITIES ACT ACCESSIBILITY GUIDELINES FOR BUILDINGS AND FACILITIES (ADAGG).

THE ELEVATIONS AND SLOPES PROVIDED ON THE DRAWINGS ARE INTENDED TO CONVEY A DESIGN THAT IS COMPATIBLE WITH ADA GUIDELINES. THE CONTRACTOR SHALL DETERMINE THE EXISTING ELEVATIONS OF ADJACENT NEW OR EXISTING CONCRETE CURB AND ADJACENT NEW OR EXISTING WALK PRIOR TO THE START OF RAMP CONSTRUCTION. ADJUSTMENTS IN GRADE SHALL BE MADE BY THE CONTRACTOR BASED ON THE ELEVATION INFORMATION TO INSURE THAT THE FINISHED WORK IS IN ACCORDANCE WITH ADA GUIDELINES.

DETECTABLE WARNINGS SHALL BE PROVIDED WHEREVER A CURB RAMP CROSSES A PUBLIC VEHICULAR WAY, EXCLUDING UNSIGNALIZED DRIVEWAYS, IN ACCORDANCE WITH DUBLIN STANDARD DRAWING PD-03. ALL DETECTABLE WARNINGS SHALL BE ADA SOLUTIONS TACTILE WARNING SURFACE MATS - REPLACEABLE WET-SET COMPOSITE TACTILE WITH A DOME SPACING OF 2.35 INCHES, MANUFACTURER PART NUMBER 2448REP. BRICK RED COLOR SHALL BE USED IN MOST LOCATIONS UNLESS OTHERWISE NOTED. THE COST OF THIS WORK WILL BE PAID AT THE UNIT PRICE BID PER EACH, AND SHALL BE IN ADDITION TO ANY OVERLAPPING PAYMENTS PER SQUARE FOOT FOR SIDEWALK OR SHARED-USE PATH.

CURB RAMPS WILL BE PAID AT THE UNIT PRICE BID PER EACH FOR COST TO FINISH AND SHALL INCLUDE THE COST OF ANY ADDITIONAL MATERIALS, GRADING, FORMING AND FINISHING NOT INCLUDED IN THE NEW WALK, WHICH IS MEASURED THROUGH THE CURB RAMP AREA.

ITEM 608 - 4" CONCRETE WALK, AS PER PLAN

IN ADDITION TO THE CONCRETE WALK, THE CONTRACTOR SHALL SHAPE AND UNIFORMLY COMPACT THE SUBGRADE TO A SURFACE CONFORMING TO THE PLANS AND THE REQUIREMENTS OF ITEM 204 AND PLACE A 4" BASE OF #57 CRUSHED AGGREGATE THE FULL WIDTH OF THE WALK. THE COST OF THIS WORK SHALL BE INCLUDED IN THE PRICE BID FOR ITEM 608 - 4" CONCRETE WALK, AS PER PLAN.

ITEM 608 - WALKWAY MISC.: 10" CONCRETE WALK

THE CONTRACTOR SHALL INSTALL A 10" THICK CONCRETE WALK AS PER THE REQUIREMENTS OF 608.03. THE 10" CONCRETE WALK SHALL BE INSTALLED IN THE CURB RAMP AND FLARE AREAS OF THE TYPE B CURB RAMPS.

IN ADDITION TO THE CONCRETE WALK, THE CONTRACTOR SHALL SHAPE AND UNIFORMLY COMPACT THE SUBGRADE TO A SURFACE CONFORMING TO THE PLANS AND THE REQUIREMENTS OF ITEM 204 AND PLACE A 4" BASE OF #57 CRUSHED AGGREGATE THE FULL WIDTH OF THE WALK. THE COST OF THIS WORK SHALL BE INCLUDED IN THE PRICE BID FOR ITEM 608 - WALKWAY MISC.: 10" CONCRETE WALK

PAVEMENT

PART-WIDTH CONSTRUCTION

BECAUSE OF THE NECESSITY TO BUILD THIS PROJECT UNDER TRAFFIC AND TO CONSTRUCT THE FULL PAVEMENT WIDTH IN STAGES, EXERCISE CARE TO PREVENT THE CONSTRUCTION OF A BUTT JOINT IN THE BASE COURSES. LAP LONGITUDINAL JOINTS AS SHOWN ON STANDARD CONSTRUCTION DRAWING BP-3.1.

ITEM 407 - TACK COAT
ITEM 407 - TACK COAT FOR INTERMEDIATE COURSE

THE RATE OF APPLICATION OF THE 407 TACK COAT SHALL BE SUBJECT TO ADJUSTMENT AS DIRECTED BY THE ENGINEER. FOR ESTIMATING PURPOSES ONLY, THE PLAN QUANTITIES INDICATE AN AVERAGE APPLICATION RATE OF:

407, TACK COAT	0.075 GAL. PER SQ. YD.
407, TACK COAT FOR INTERMEDIATE COURSE	0.04 GAL. PER SQ. YD.

ITEM 206 - LIME KILN DUST STABILIZED SUBGRADE, 16 INCHES DEEP, AS PER PLAN

THIS ITEM SHALL COMPLY WITH THE GENERAL MATERIALS AND CONSTRUCTION REQUIREMENTS OF ODOT CMS 206.

PAYMENT FOR ALL LABOR, EQUIPMENT AND MATERIALS NECESSARY TO PERFORM THE WORK NOTED ABOVE, INCLUDING LIME KILN DUST, CURING COAT, AND TEST ROLLING SHALL BE INCLUDED IN THE UNIT PRICE BID PER SQUARE YARD FOR ITEM 206, LIME KILN DUST STABILIZED SUBGRADE, 16 INCHES DEEP, AS PER PLAN.

ITEM 609 - COMBINATION CURB AND GUTTER, TYPE 2, AS PER PLAN

COMBINATION CURB AND GUTTER, TYPE 2, SHALL BE CONSTRUCTED IN ACCORDANCE WITH ITEM 609 AND STANDARD CONSTRUCTION DRAWING BP-5.1, EXCEPT AS FOLLOWS:

1. IT SHALL CONFORM TO THE DETAIL ON SHEET 10.

2. THE #57 CRUSHED AGGREGATE BASE SHOWN ON THE ABOVE REFERENCED DETAIL SHALL BE INCLUDED IN THIS ITEM. CONSTRUCT THE SUBGRADE ACCORDING TO ITEM 204. USE THE SPREADING AND COMPACTION REQUIREMENTS OF ITEM 304.

PAYMENT FOR ALL OF THE ABOVE SHALL BE INCLUDED IN THE CONTRACT UNIT PRICE BID PER FOOT.

DRAINAGE

REVIEW OF DRAINAGE FACILITIES

BEFORE ANY WORK IS STARTED ON THE PROJECT AND AGAIN BEFORE FINAL ACCEPTANCE BY THE CITY, REPRESENTATIVES OF THE CITY AND THE CONTRACTOR SHALL MAKE AN INSPECTION OF ALL EXISTING SEWERS WHICH ARE TO REMAIN IN SERVICE AND WHICH MAY BE AFFECTED BY THE WORK. THE CONDITION OF THE EXISTING CONDUITS AND THEIR APPURTENANCE SHALL BE DETERMINED FROM FIELD OBSERVATIONS. RECORDS OF THE INSPECTION SHALL BE KEPT IN WRITING BY THE CITY.

ALL NEW CONDUITS, INLETS, CATCH BASINS, AND MANHOLES CONSTRUCTED AS A PART OF THE PROJECT SHALL BE FREE OF ALL FOREIGN MATTER AND IN A CLEAN CONDITION BEFORE THE PROJECT WILL BE ACCEPTED BY THE CITY.

ALL EXISTING SEWERS INSPECTED INITIALLY BY THE ABOVE MENTIONED PARTIES SHALL BE MAINTAINED AND LEFT IN A CONDITION REASONABLY COMPARABLE TO THAT DETERMINED BY THE ORIGINAL INSPECTION. ANY CHANGE IN THE CONDITION RESULTING FROM THE CONTRACTOR'S OPERATIONS SHALL BE CORRECTED BY THE CONTRACTOR TO THE SATISFACTION OF THE CITY ENGINEER.

PAYMENT FOR ALL OPERATIONS DESCRIBED ABOVE SHALL BE INCLUDED IN THE CONTRACT PRICE FOR THE PERTINENT 611 CONDUIT ITEMS.

CROSSINGS AND CONNECTIONS TO EXISTING PIPES AND UTILITIES

WHERE PLANS PROVIDE FOR A PROPOSED CONDUIT TO BE CONNECTED TO, OR CROSS OVER OR UNDER AN EXISTING SEWER OR UNDERGROUND UTILITY, THE CONTRACTOR SHALL LOCATE THE EXISTING PIPES OR UTILITIES BOTH AS TO LINE AND GRADE BEFORE STARTING TO LAY THE PROPOSED CONDUIT.

IF IT IS DETERMINED THAT THE ELEVATION OF THE EXISTING CONDUIT, OR EXISTING APPURTENANCE TO BE CONNECTED, DIFFERS FROM THE PLAN ELEVATION OR RESULTS IN A CHANGE IN THE PLAN CONDUIT SLOPE, THE CITY ENGINEER SHALL BE NOTIFIED BEFORE STARTING CONSTRUCTION OF ANY PORTION OF THE PROPOSED CONDUIT WHICH WILL BE AFFECTED BY THE VARIANCE IN THE EXISTING ELEVATIONS.

IF IT IS DETERMINED THAT THE PROPOSED CONDUIT WILL INTERSECT AN EXISTING SEWER OR UNDERGROUND UTILITY IF CONSTRUCTED AS SHOWN ON THE PLAN, THE CITY ENGINEER SHALL BE NOTIFIED BEFORE STARTING CONSTRUCTION OF ANY PORTION OF THE PROPOSED CONDUIT WHICH WOULD BE AFFECTED BY THE INTERFERENCE WITH AN EXISTING FACILITY.

PAYMENT FOR ALL THE OPERATIONS DESCRIBED ABOVE SHALL BE INCLUDED IN THE CONTRACT PRICE FOR THE PERTINENT 611 CONDUIT ITEM.

FARM DRAINS

ALL FARM DRAINS, WHICH ARE ENCOUNTERED DURING CONSTRUCTION, SHALL BE PROVIDED WITH UNOBSTRUCTED OUTLETS. EXISTING COLLECTORS WHICH ARE LOCATED BELOW THE ROADWAY DITCH ELEVATIONS, AND WHICH CROSS THE ROADWAY, SHALL BE REPLACED WITHIN THE RIGHT OF WAY BY ITEM 611 CONDUIT, TYPE B, ONE COMMERCIAL SIZE LARGER THAN THE EXISTING CONDUIT.

EXISTING COLLECTORS AND ISOLATED FARM DRAINS, WHICH ARE ENCOUNTERED ABOVE THE ELEVATION OF ROADWAY DITCHES, SHALL BE OUTLETTED INTO THE ROADWAY DITCH BY 611 TYPE F CONDUIT. THE OPTIMUM OUTLET ELEVATION SHALL BE ONE FOOT ABOVE THE FLOWLINE ELEVATION OF THE DITCH. LATERAL FIELD TILES WHICH CROSS THE ROADWAY SHALL BE INTERCEPTED BY 611, TYPE E CONDUIT, AND CARRIED IN A LONGITUDINAL DIRECTION TO AN ADEQUATE OUTLET OR ROADWAY CROSSING.

THE LOCATION, TYPE, SIZE AND GRADE OF REPLACEMENTS SHALL BE DETERMINED BY THE CITY ENGINEER AND PAYMENT SHALL BE MADE ON FINAL MEASUREMENTS.

EROSION CONTROL PADS AND ANIMAL GUARDS SHALL BE PROVIDED AT THE OUTLET END OF ALL FARM DRAINS AS PER STANDARD CONSTRUCTION DRAWING DM-1.1, EXCEPT WHEN THEY OUTLET INTO A DRAINAGE STRUCTURE. PAYMENT FOR THE EROSION CONTROL PADS AND ANIMAL GUARDS AND ANY NECESSARY BENDS OR BRANCHES SHALL BE INCLUDED FOR PAYMENT IN THE PERTINENT CONDUIT ITEMS.

THE FOLLOWING ESTIMATED QUANTITIES HAVE BEEN INCLUDED IN THE GENERAL SUMMARY FOR THE WORK NOTED ABOVE:

611,	8 " CONDUIT, TYPE B	50 FT.
611,	8 " CONDUIT, TYPE E	50 FT.
611,	8 " CONDUIT, TYPE F	50 FT.
611,	4 " CONDUIT, TYPE F	20 FT.
601,	ROCK CHANNEL PROTECTION TYPE C WITH FILTER	5 CY.

UNRECORDED STORM WATER DRAINAGE

FURNISH A CONTINUANCE FOR ALL UNRECORDED STORM WATER DRAINAGE, SUCH AS ROOF DRAINS, FOOTER DRAINS, OR YARD DRAINS, DISTURBED BY THE WORK. FURNISH EITHER AN OPEN CONTINUANCE OR AN UNOBSTRUCTED CONTINUANCE BY CONNECTING A CONDUIT THROUGH THE CURB OR INTO A DRAINAGE STRUCTURE. THE LOCATION, TYPE, SIZE AND GRADE OF THE NEEDED CONDUIT TO REPLACE OR EXTEND AN EXISTING DRAIN WILL BE DETERMINED BY THE CITY ENGINEER. ALL SUCH CONTINUANCE REQUIRES A RIGHT OF WAY USE PERMIT.

THE FOLLOWING CONDUIT TYPES MAY BE USED: 707.33, 707.41 NON-PERFORATED, 707.42, 707.43, 707.45, 707.46, 707.47, 707.51, 707.52 SDR35.

THE FOLLOWING ESTIMATED QUANTITIES HAVE BEEN INCLUDED IN THE GENERAL SUMMARY FOR USE AS DIRECTED BY THE CITY ENGINEER FOR THE WORK NOTED ABOVE:

611,	4" CONDUIT, TYPE B (FOR DRAINAGE CONNECTION)	50 FT.
611,	4" CONDUIT, TYPE C (FOR DRAINAGE CONNECTION)	50 FT.
611,	4" CONDUIT, TYPE D (FOR DRAINAGE CONNECTION)	50 FT.
611,	4" CONDUIT, TYPE E (FOR DRAINAGE CONNECTION)	50 FT.

MANHOLES, CATCH BASINS AND INLETS REMOVED OR ABANDONED

ALL CASTINGS SHALL BE CAREFULLY REMOVED AND STORED WITHIN THE RIGHT OF WAY FOR SALVAGE BY CITY OF DUBLIN FORCES.

CALCULATED LAM
CHECKED LMO

GENERAL NOTES

S.R. 161/ EITERMAN RD. ROUNDABOUT

\\Akrn04\Data\2013\2013945\UNI\80748\roadway\sheets\80748GN001.dgn

ITEM SPECIAL - MISCELLANEOUS METAL

EXISTING CASTINGS MAY PROVE TO BE UNSUITABLE FOR REUSE, AS DETERMINED BY THE CITY ENGINEER. IT SHALL BE THE CONTRACTOR'S RESPONSIBILITY TO PROVIDE THE CASTINGS OF THE REQUIRED TYPE, SIZE AND STRENGTH (HEAVY OR LIGHT DUTY) FOR THE PARTICULAR STRUCTURE IN QUESTION. ALL MATERIAL SHALL MEET ITEM 611 OF THE SPECIFICATIONS AND SHALL HAVE THE PRIOR APPROVAL OF THE CITY ENGINEER.

THE FOLLOWING ESTIMATED QUANTITY HAS BEEN CARRIED TO THE GENERAL SUMMARY FOR USE AS DIRECTED BY THE CITY ENGINEER.

SPECIAL, MISCELLANEOUS METAL 500 POUNDS

THE CONTRACTOR IS CAUTIONED TO USE EXTREME CARE IN THE REMOVAL, STORAGE AND REPLACEMENT OF ALL EXISTING CASTINGS. CASTINGS DAMAGED BY THE NEGLIGENCE OF THE CONTRACTOR, AS DETERMINED BY THE CITY ENGINEER, SHALL BE REPLACED WITH THE PROPER NEW CASTINGS AT THE EXPENSE OF THE CONTRACTOR.

POST CONSTRUCTION STORM WATER TREATMENT

THIS PLAN UTILIZES STRUCTURAL BEST MANAGEMENT PRACTICES (BMP'S) FOR POST CONSTRUCTION STORM WATER TREATMENT.

MANUFACTURED WATER QUALITY STRUCTURE

THIS PLAN UTILIZES MANUFACTURED WATER QUALITY STRUCTURES FOR WATER QUALITY TREATMENT. AREAS HAVE BEEN SHOWN IN THE PLANS FOR PLACEMENT OF AN OFF-LINE SYSTEM. PAYMENT FOR THESE DEVICES SHALL BE MADE AT THE CONTRACT UNIT PRICE FOR ITEM 895, MANUFACTURED WATER QUALITY STRUCTURE, TYPE 4, AS PER PLAN.

ITEM 895 - MANUFACTURED WATER QUALITY STRUCTURE, TYPE 4, AS PER PLAN

THE CONTRACTOR SHALL REMOVE THE EXISTING MANUFACTURED WATER QUALITY STRUCTURE AT STA. 45+18 LT AND RELOCATE SAID STRUCTURE TO THE LOCATION SHOWN ON SHEET 79.

THE CONTRACTOR SHALL CAREFULLY REMOVE THE EXISTING WATER QUALITY STRUCTURE IN A MANNER TO AVOID DAMAGE. BACKFILL THE CAVITY CREATED BY THE REMOVAL ACCORDING TO 202.02 EXCEPT FOR THE PART OF THE CAVITY THAT LIES WITHIN THE LIMITS OF SUBSEQUENT EXCAVATION.

INSTALLATION OF THE WATER QUALITY STRUCTURE SHALL BE AS PER 895 EXCEPT THE CONTRACTOR WILL NOT BE REQUIRED TO FURNISH A NEW PRECAST STRUCTURE.

PAYMENT FOR THIS WORK, INCLUDING ALL LABOR, TOOLS, EQUIPMENT AND NECESSARY MATERIALS, SHALL BE MADE AT THE UNIT PRICE BID PER EACH, COMPLETE IN PLACE, AND ACCEPTED.

ITEM 611 - MANHOLE, NO. 3 WITH 108" BASE I.D. & 12" WEIR, AS PER PLAN

THE CONTRACTOR SHALL REMOVE THE EXISTING MANHOLE AT STA. 45+15 LT AND RELOCATE SAID STRUCTURE TO STA. 6049+16.6 LT. AT THE LOCATION AND ELEVATIONS SHOWN ON SHEETS 79 - 80.

THE CONTRACTOR SHALL CAREFULLY REMOVE THE EXISTING MANHOLE IN A MANNER TO AVOID DAMAGE. BACKFILL THE CAVITY CREATED BY THE REMOVAL ACCORDING TO 202.02 EXCEPT FOR THE PART OF THE CAVITY THAT LIES WITHIN THE LIMITS OF SUBSEQUENT EXCAVATION.

INSTALLATION OF THE MANHOLE SHALL BE AS PER 611 EXCEPT THE CONTRACTOR WILL NOT BE REQUIRED TO FURNISH A NEW PRECAST STRUCTURE. THE MANHOLE WILL BE ADJUSTED TO GRADE ACCORDING TO 611.10 IN ORDER TO MEET THE ELEVATIONS SHOWN ON THE PLANS.

PAYMENT FOR THIS WORK, INCLUDING ALL LABOR, TOOLS, EQUIPMENT AND NECESSARY MATERIALS, SHALL BE MADE AT THE UNIT PRICE BID PER EACH, COMPLETE IN PLACE, AND ACCEPTED.

ITEM 611 - CATCH BASIN, NO. 3A, AS PER PLAN

THIS ITEM SHALL CONFORM TO CITY OF COLUMBUS STANDARD DRAWING AA-S125A, STANDARD CURB AND GUTTER INLET. THE INLET FRAME AND CURB BOX SHALL CONFORM TO CITY OF COLUMBUS STANDARD DRAWING AA-S128.

BICYCLE SAFE GRATES SHALL BE FURNISHED WITH THIS ITEM.

THIS ITEM SHALL BE CHANNELIZED.

THE CONTRACTOR SHALL PLACE CURB AND GUTTER INLETS WITHIN THE CURB LINE IN ACCORDANCE WITH COLUMBUS STANDARD DRAWING AA-S125A. BASELINE STATIONS AND OFFSETS ARE MEASURED TO FACE OF CURB AND CENTERLINE OF GRATE. GRATE ELEVATIONS ARE 2" BELOW NORMAL PAVEMENT SLOPE AT FACE OF CURB, AS PER STANDARD CONSTRUCTION DRAWING CB-2.2.

ITEM 611 - DRAINAGE STRUCTURE, MISC.: 12" HDPE FLARED END SECTION WITH DISSIMILAR COUPLER

HDPE FLARED END SECTIONS CALLED FOR ON THE PLANS SHALL BE ADVANCED DRAINAGE SYSTEMS (ADS) "FLARED END SECTIONS", OR APPROVED EQUAL, WITH THREADED RODS AND WING NUTS. N-12 ADAPTER FITTINGS FOR CONNECTION TO CONCRETE PIPE SHALL BE INCLUDED IN THE UNIT BID PRICE FOR THE FLARED END SECTIONS.

ITEM 611 - DRAINAGE STRUCTURE, MISC.: 36" CONCRETE FLARED END SECTION

CONCRETE FLARED END SECTIONS CALLED FOR ON THE PLANS SHALL BE HANSON PIPE "CONCRETE FLARED END SECTION".

ITEM 605 - 4" BASE PIPE UNDERDRAINS, AS PER PLAN
ITEM 605 - 4" UNCLASSIFIED PIPE UNDERDRAINS, AS PER PLAN

4" PIPE UNDERDRAINS SHALL BE CONSTRUCTED IN ACCORDANCE WITH ITEM 605, EXCEPT AS FOLLOWS:

1. PIPE MATERIAL SHALL CONFORM TO ODOT CMS 707.31.

2. BACKFILL SHALL BE #57 CRUSHED AGGREGATE, AS DETAILED IN THE PLANS.

PAVEMENT RESTORATION FOR PIPE INSTALLATIONS

THE FOLLOWING QUANTITIES HAVE BEEN PROVIDED FOR PAVEMENT RESTORATION FOLLOWING INSTALLATION OF THE 36" STORM SEWER ACROSS OLD INDUSTRIAL PARKWAY, AS SHOWN ON SHEET 56

ITEM 448, ASPHALT CONCRETE SURFACE COURSE, TYPE 1, PG64-22	2 TON
ITEM 448, ASPHALT CONCRETE INTERMEDIATE COURSE, TYPE 2, PG64-22	4 TON
ITEM 301, ASPHALT CONCRETE BASE, PG64-22	12 TON
ITEM 304, AGGREGATE BASE	4 CY

THE ABOVE QUANTITY IS BASED ON A 448 SURFACE COURSE THICKNESS OF 1-1/2 INCHES, A 448 INTERMEDIATE COURSE THICKNESS OF 1-3/4 INCHES, A 301 THICKNESS OF 9 INCHES, A 304 THICKNESS OF 6 INCHES AND A PAVEMENT RESTORATION WIDTH THAT INCLUDES THE TRENCH WIDTH PLUS TWO FEET ON EACH SIDE OF THE TRENCH.

PROVIDE ANY MATERIALS USED OUTSIDE THE LIMITS STATED ABOVE AT NO ADDITIONAL COST.

EROSION CONTROL

SEEDING AND MULCHING

THE FOLLOWING QUANTITIES ARE PROVIDED TO PROMOTE GROWTH AND CARE OF PERMANENT SEEDED AREAS:

653, TOPSOIL FURNISHED AND PLACED, AS PER PLAN	1041 CU. YD.
659, SEEDING AND MULCHING, AS PER PLAN	SEE SHEET 78
659, REPAIR SEEDING AND MULCHING	625 SQ. YD.
659, INTER-SEEDING	625 SQ. YD.
659, COMMERCIAL FERTILIZER	1.74 TON
659, LIME	2.58 ACRES
659, WATER	69 M. GAL.

SEEDING AND MULCHING SHALL BE APPLIED TO ALL AREAS OF EXPOSED SOIL WITHIN THE CONSTRUCTION LIMITS. QUANTITY CALCULATIONS FOR SEEDING AND MULCHING ARE BASED ON THESE LIMITS.

ITEM 653 - TOPSOIL FURNISHED AND PLACED, AS PER PLAN

A MINIMUM 3 INCHES OF TOPSOIL SHALL BE PLACED IN ALL AREAS TO BE SEEDED. PRIOR TO PLACING TOPSOIL IN CUT AREAS, THE EARTH SHALL BE EXCAVATED TO A DEPTH SUFFICIENT TO PLACE 3 INCHES OF TOPSOIL. THE COST OF EXCAVATION AND DISPOSAL OF SURPLUS MATERIALS WILL NOT BE PAID FOR SEPARATELY, BUT SHALL BE INCLUDED IN THE COST OF THE VARIOUS CONTRACT ITEMS.

TOPSOIL SHALL BE REMOVED AND WASTED OR UTILIZED IN NON-LOAD BEARING FILLS IN ACCORDANCE WITH THE SPECIFICATIONS. NO EXTRA COMPENSATION SHALL BE PAID FOR THE REMOVAL OF EXCESS TOPSOIL AS REQUIRED TO OBTAIN A SUITABLE SUBGRADE. PAYMENT FOR TOPSOIL REMOVAL IS INCLUDED IN ITEM 203, EXCAVATION.

ALL TOPSOIL MATERIALS AND FINAL AREA OF SUBGRADE PREPARATION SHALL BE FREE FROM ROCK AND OTHER FOREIGN MATERIAL OF ½" OR GREATER IN ANY DIMENSION.

ITEM 659 - SEEDING AND MULCHING, AS PER PLAN

SEED: CERTIFICATION OF GRASS SEED SHALL BE PROVIDED BY SEED VENDOR FOR EACH GRASS-SEED MIXTURE STATING THE BOTANICAL AND COMMON NAME, PERCENTAGE BY WEIGHT OF EACH SPECIES AND VARIETY; AND PERCENTAGE OF PURITY, GERMINATION, AND WEED SEED. INCLUDE THE YEAR OF PRODUCTION AND DATE OF PACKAGING. FURNISH NATIONAL TURFGRASS EVALUATION PROGRAM (NTEP) DATA FOR EACH SPECIES TO BE USED.

GRASS SEED MUST BE FRESH, CLEAN, DRY, NEW-CROP SEED COMPLYING WITH THE A.O.S.A. "JOURNAL OF SEED TECHNOLOGY" RULES FOR TESTING SEEDS FOR PURITY AND GERMINATION TOLERANCES.

SEED SPECIES SHALL BE AS FOLLOWS, WITH NOT LESS THAN 90 PERCENT GERMINATION, NOT LESS THAN 98 PERCENT PURE SEED, AND NOT MORE THAN 0.5 PERCENT WEED SEED.

TURFGRASS SEED MIX PROPORTIONED BY WEIGHT:

A. 80 PERCENT TALL FESCUE (FESTUCA ARUNDINACEA), WITH A MINIMUM OF 3 IMPROVED TURF-TYPE VARIETIES. KENTUCKY-31 AND ALTA VARIETIES ARE NOT APPROVED.
B. 20 PERCENT PERENNIAL RYEGRASS (LOLIUM PERENNE).

SEEDING: SOW SEED AT A TOTAL RATE OF 7-9 LB. / 1,000 S.F. WITH A SPREADER OR SEEDING MACHINE. RAKE SEED LIGHTLY INTO TOP 1/8 INCH OF SOIL, ROLL LIGHTLY, AND WATER WITH FINE SPRAY. THOROUGHLY COVER WITH STRAW AND TACK. TACK SHALL BE ADEQUATE TO PREVENT THE STRAW FROM BEING BLOWN AWAY.

PROTECT SEEDED AREAS WITH SLOPES EXCEEDING 3:1 WITH EROSION CONTROL BLANKETS AS DIRECTED BY THE CITY ENGINEER. COST OF EROSION CONTROL BLANKETS, MATERIAL, AND LABOR SHALL BE PAID FOR BY THE CITY.

HYDRO-SEEDING: NOT PERMITTED.

HYDRO-MULCHING: NOT PERMITTED.

TURF MAINTENANCE: MAINTAIN AND ESTABLISH TURF BY WATERING, FERTILIZING, WEEDING, MOWING, TRIMMING, AND REPLANTING TO ESTABLISH HEALTHY, VIABLE TURF. ROLL, REGRADE, AND REPLANT BARE OR ERODED AREAS AND REMULCH TO PRODUCE A UNIFORMLY SMOOTH TURF. PROVIDE THE SAME MATERIALS AND INSTALLATION AS THOSE USED IN THE ORIGINAL INSTALLATION. WATER TURF WITH FINE SPRAY AT A MINIMUM RATE OF 1 INCH PER WEEK UNLESS RAINFALL PRECIPITATION IS ADEQUATE.

MOW TURFGRASS SEED MIX AREAS AS SOON AS TOP GROWTH IS TALL ENOUGH TO CUT. REPEAT MOWING TO MAINTAIN SPECIFIED HEIGHT WITHOUT CUTTING MORE THAN 1/3 OF GRASS HEIGHT. MOW AREAS TO A HEIGHT OF 2 TO 3 INCHES.

CALCULATED LAM
CHECKED LMO

GENERAL NOTES

S.R. 161/EITERMAN RD.
ROUNDABOUT

\\Akrn04\Data\2013\2013945\UNI\80748\roadway\sheets\80748GN001.dgn

GENERAL - CITY OF DUBLIN

THE CONTRACTOR INTENDING TO SUBMIT A BID FOR CITY OF DUBLIN (HEREAFTER REFERRED TO AS "CITY") CAPITAL IMPROVEMENT CONTRACTS SHALL BE PREQUALIFIED WITH THE OHIO DEPARTMENT OF TRANSPORTATION IN ACCORDANCE WITH SECTION 102 OF THE ODOT CONSTRUCTION AND MATERIAL SPECIFICATIONS AND CHAPTER 5525 OF THE OHIO REVISED CODE CONCERNING CONTSTRUCTION CONTRACTS.

ALL ITEMS OF WORK CALLED FOR ON THE PLANS FOR WHICH NO SPECIFIC METHOD OF PAYMENT IS PROVIDED SHALL BE PERFORMED BY THE CONTRACTOR WITH THE COST TO BE INCLUDED IN THE UNIT PRICE BID FOR THE VARIOUS RELATED ITEMS.

IT IS THE INTENTION OF THE CONTRACT DOCUMENTS TO PROVIDE AND REQUIRE A COMPLETE PROJECT READY FOR OPERATION. ANY WORK ITEMS OMITTED FROM THE CONTRACT DOCUMENTS WHICH ARE CLEARLY NECESSARY FOR COMPLETION OF THE WORK AND ITS APPURTENANCES SHALL BE CONSIDERED A PART OF SUCH WORK, THOUGH NOT DIRECTLY SPECIFIED OR CALLED FOR IN THE CONTRACT DOCUMENTS. THIS INCLUDES, BUT IS NOT LIMITED TO, SUCH INCIDENTAL ITEMS AS RELOCATION OF MAIL BOXES, SAW CUTTING, AND REMOVAL AND/OR RELOCATION OF SIGNS, SPRINKLERS, OR OTHER MISCELLANEOUS ITEMS.

THE CITY ENGINEER IS NOT RESPONSIBLE FOR MEANS, METHODS, PROCEDURES, TECHNIQUES, OR SEQUENCES OF CONSTRUCTION THAT ARE NOT SPECIFIED HEREIN. THE CITY ENGINEER IS NOT RESPONSIBLE FOR SAFETY ON THE WORK SITE, OR FOR FAILURE BY THE CONTRACTOR TO PERFORM WORK ACCORDING TO THE CONTRACT DOCUMENTS.

THE CONTRACTOR SHALL NOTIFY THE CITY OF DUBLIN DIVISION OF ENGINEERING IN WRITING AT LEAST 5 WORKING DAYS PRIOR TO BEGINNING CONSTRUCTION.

THE CONTRACTOR SHALL BE SOLELY RESPONSIBLE FOR COMPLYING WITH ALL FEDERAL, STATE AND LOCAL SAFETY REQUIREMENTS INCLUDING THE OCCUPATIONAL SAFETY AND HEALTH ACT OF 1970. THE CONTRACTOR SHALL EXERCISE CAUTION ALWAYS FOR THE PROTECTION OF PERSONS (INCLUDING EMPLOYEES) AND PROPERTY. IT SHALL ALSO BE THE SOLE RESPONSIBILITY OF THE CONTRACTOR TO INITIATE, MAINTAIN AND SUPERVISE ALL SAFETY REQUIREMENTS, PRECAUTIONS AND PROGRAMS IN CONNECTION WITH THE WORK, INCLUDING THE REQUIREMENTS FOR CONFINED SPACES PER 29 CFR 1910.146.

ANY MODIFICATIONS TO THE WORK AS SHOWN ON THESE APPROVED PLANS SHALL HAVE PRIOR WRITTEN APPROVAL OF THE CITY ENGINEER.

THE CONTRACTOR SHALL NOT ORDER MATERIALS OR PERFORM WORK FOR ITEMS DESIGNATED BY PLAN NOTE TO BE USED "AS DIRECTED BY THE ENGINEER" UNLESS AUTHORIZED BY THE CITY ENGINEER.

FOLLOWING COMPLETION OF CONSTRUCTION, A PROOF SURVEY SHALL BE PROVIDED BY THE CONTRACTOR THAT DOCUMENTS AS-BUILT INFORMATION ON ALL PUBLIC UTILITIES (SANITARY, STORM, WATER) COMPLETED AS PART OF THIS PROJECT. THE SURVEY SHALL BE PREPARED AND SIGNED BY AN OHIO PROFESSIONAL SURVEYOR. THE CONTRACTOR SHALL REVISE THE ORIGINAL MYLARS IN RED INK, TO THE SATISFACTION OF THE CITY, SHOWING ALL CHANGES IN THE WORK. THE COST OF THE PROOF SURVEY, INCLUDING MYLAR REVISIONS, WILL BE PAID AT THE LUMP SUM PRICE BID FOR ITEM 690, SPECIAL - AS-BUILT CONSTRUCTION PLANS.

THE CONTRACTOR SHALL RESTRICT CONSTRUCTION ACTIVITY TO PUBLIC RIGHT-OF-WAY, AREAS DEFINED AS PERMANENT AND/OR TEMPORARY CONSTRUCTION EASEMENTS, AND/OR THE LIMITS OF DISTURBANCE SHOWN.

PROPERTY BOUNDARIES, INCLUDING PROPERTY LINES AND ROAD RIGHTS-OF-WAY, ARE SHOWN FROM THE BEST INFORMATION AVAILABLE AND ARE NOT NECESSARILY COMPLETE OR CORRECT.

THE CONTRACTOR SHALL BE RESPONSIBLE FOR HAVING THE FINISHED WORK CONFORM TO THE LINES, GRADES, ELEVATIONS, AND DIMENSIONS CALLED FOR ON THE DRAWINGS AND TYPICAL SECTIONS. PAYMENT FOR CONSTRUCTION LAYOUT SHALL BE MADE AT THE LUMP SUM PRICE BID FOR ITEM 623 - CONSTRUCTION LAYOUT STAKES.

THE CONTRACTOR SHALL CAREFULLY PRESERVE BENCHMARKS, PROPERTY CORNERS, REFERENCE POINTS, STAKES, AND OTHER SURVEY REFERENCE MONUMENTS OR MARKERS. IN CASE OF DESTRUCTION, THE CONTRACTOR SHALL BE RESPONSIBLE FOR RESTORATIONS. RESETTING OF MARKERS SHALL BE PERFORMED BY AN OHIO PROFESSIONAL SURVEYOR AS APPROVED BY THE CITY ENGINEER AT THE CONTRACTOR'S EXPENSE.

THE CONTRACTOR SHALL RESTORE ALL DISTURBED AREAS TO EQUAL OR BETTER CONDITION THAN EXISTED BEFORE CONSTRUCTION. DRAINAGE DITCHES OR WATER COURSES THAT ARE DISTURBED BY CONSTRUCTION SHALL BE RESTORED TO THE GRADES AND CROSS-SECTIONS THAT EXISTED BEFORE CONSTRUCTION.

ALL SIGNS, FENCES, LANDSCAPING, STRUCTURES OR OTHER APPURTENANCES DISTURBED OR DAMAGED DURING CONSTRUCTION SHALL BE REPLACED OR REPAIRED TO THE SATISFACTION OF THE CITY ENGINEER. THE COST OF THIS WORK SHALL BE PAID FOR BY THE CONTRACTOR.

WHERE THE WORK REQUIRES REMOVAL OF BUSINESS SIGNS OR PRIVATE LANDSCAPING SUCH AS DECORATIVE ROCKS, CROSSTIES, FENCES, OR OTHER SALVAGEABLE AND REUSABLE ITEMS, THE CONTRACTOR SHALL COORDINATE SUCH REMOVAL WITH THE PROPERTY OWNER PRIOR TO THE START OF WORK. IF THESE ITEMS CANNOT BE REPLACED TO THEIR ORIGINAL LOCATION FOLLOWING COMPLETION OF THE WORK, THE CONTRACTOR SHALL BE OBLIGATED TO RELOCATE THESE ITEMS TO A STORAGE FACILITY OF THE OWNER'S CHOICE LOCATED ON THE SAME PROPERTY. IF THE PROPERTY OWNER DOES NOT WISH TO SALVAGE THESE ITEMS, THEN THE CONTRACTOR SHALL BE RESPONSIBLE FOR PROPER REMOVAL AND DISPOSAL. THE COST FOR THIS WORK SHALL BE INCLUDED IN THE VARIOUS RELATED ITEMS OF THE CONTRACT.

NON-RUBBER TIRED VEHICLES SHALL NOT BE MOVED ON OR ACROSS PUBLIC STREETS OR HIGHWAYS WITHOUT THE WRITTEN PERMISSION OF THE CITY ENGINEER.

TRACKING OR SPILLING MUD, DIRT OR DEBRIS UPON STREETS, RESIDENTIAL OR COMMERCIAL DRIVES, SIDEWALKS OR BIKE PATHS IS PROHIBITED AND ANY SUCH OCCURRENCE SHALL BE CLEANED UP IMMEDIATELY BY THE CONTRACTOR. IF THE CONTRACTOR FAILS TO REMOVE THE MUD, DIRT, DEBRIS, OR SPILLAGE, THE CITY OF DUBLIN RESERVES THE RIGHT TO REMOVE THESE MATERIALS AND CLEAN AFFECTED AREAS, THE COST OF WHICH SHALL BE WITHHELD FROM MONIES THAT ARE DUE OR MAY BECOME DUE TO THE CONTRACTOR.

IN THE EVENT THAT IT BECOMES NECESSARY FOR THE CITY TO PERFORM WORK OF AN IMMEDIATE NATURE (SUCH AS THE PLACEMENT OF BARRICADES OR REPLACEMENT OF SIGNS AND OTHER WARNING OR PROTECTIVE DEVICES) BECAUSE OF FAILURE OR REFUSAL OF THE CONTRACTOR TO PERFORM SUCH WORK AS REQUIRED BY THE CONTRACT, THE CONTRACTOR SHALL REIMBURSE THE CITY AT THE RATE OF 2.5 TIMES THE ACTUAL COST OF LABOR, MATERIALS, AND EQUIPMENT NECESSARY TO PERFORM SUCH WORK. THE CITY SHALL BE REQUIRED TO NOTIFY OR ATTEMPT TO NOTIFY THE DESIGNATED REPRESENTATIVE OF THE CONTRACTOR OF THE NECESSITY TO PERFORM SUCH WORK. IF THE CONTRACTOR REFUSES OR FAILS WITHIN A REASONABLE TIME TO PERFORM OR CAUSE THE PERFORMANCE OF SUCH WORK, THE CITY SHALL BE REIMBURSED BY THE CONTRACTOR IN THE AMOUNT PROVIDED HEREIN BY WAY OF A DEDUCTION FROM THE CONTRACTOR'S NEXT PAYMENT UNDER THE CONTRACT. REASONABLE TIME FOR ALL STREETS INVOLVED ON THIS CONTRACT IS 1 HOUR FROM THE TIME OF NOTIFICATION BY THE CITY.

ITEM SPECIAL - CPM SCHEDULE, AS PER PLAN

THE CONTRACTOR SHALL PROVIDE A CPM SCHEDULE IN ACCORDANCE WITH CITY OF DUBLIN GENERAL CONDITIONS SECTION 108.03 B.

SEQUENCE OF CONSTRUCTION

PHASE 1

PRIOR TO THE START OF PHASE 1 CONSTRUCTION, THE CONTRACTOR SHALL CONSTRUCT THE TWO AREAS OF PAVEMENT FOR MAINTAINING TRAFFIC ALONG THE U.S. 33 EAST EXIT RAMP AND ALONG THE S.R. 161 WB SHOULDER, AS SHOWN ON THE PHASE 1 MAINTENANCE OF TRAFFIC PLAN SHEETS 26 AND 27. THE CONTRACTOR SHALL REMOVE THE EXISTING TRAFFIC SIGNAL INSTALLATION IN ACCORDANCE WITH CMS 632.26, AT THE INTERSECTION OF S.R. 161 AND EITERMAN ROAD. THE PROPOSED AEP UNDERGROUND CONDUIT CROSSING S.R. 161 AND THE U.S. 33 EAST EXIT RAMP SHALL ALSO BE CONSTRUCTED PRIOR TO PHASE 1. THIS WORK SHALL BE COMPLETED UNDER FLAGGER CONTROL IN ACCORDANCE WITH THE ODOT STANDARD CONSTRUCTION DRAWING MT-95.30.

PHASE 1 CONSISTS OF THE BEGINNING OF CONSTRUCTION OF THE PROPOSED ROUNDABOUT, APPROACH PAVEMENT ON S.R. 161, THE U.S. 33 EAST ENTRANCE RAMP, AND RELOCATED EITERMAN ROAD; CONSTRUCTION OF THE PAVEMENT FOR MAINTAINING TRAFFIC ALONG THE S.R. 161 EAST SHOULDER WEST OF THE U.S. 33 EAST EXIT RAMP; AND PART-WIDTH CONSTRUCTION OF THE U.S. 33 EAST EXIT RAMP. ALL PROPOSED PAVEMENT SHALL BE CONSTRUCTED UP TO AND INCLUDING THE INTERMEDIATE COURSE. WORK INCLUDES STORM SEWER, WATER MAIN, AEP UNDERGROUND CONDUIT, LIGHTING, AND SIGNING. A MINIMUM OF ONE LANE OF TRAFFIC IN EACH DIRECTION SHALL BE MAINTAINED ON S.R. 161 AND EITERMAN ROAD, AND ONE LANE OF TRAFFIC SHALL BE MAINTAINED ON THE U.S. 33 EAST EXIT RAMP, AS SHOWN ON THE PHASE 1 MAINTENANCE OF TRAFFIC PLANS, UTILIZING EXISTING PAVEMENT AND PAVEMENT FOR MAINTAINING TRAFFIC.

ALL PHASE 1 WORK CAN BE COMPLETED CONCURRENTLY WITH PHASE 1A.

PHASE 1A

PHASE 1A CONSISTS OF THE CONTINUED CONSTRUCTION OF THE PROPOSED ROUNDABOUT, APPROACH PAVEMENT ON S.R. 161; THE REMAINING CONSTRUCTION OF THE U.S. 33 EAST ENTRANCE RAMP AND RELOCATED EITERMAN ROAD; AND THE CONTINUED PART-WIDTH CONSTRUCTION OF THE U.S. 33 EAST EXIT RAMP. ALL PROPOSED PAVEMENT SHALL BE CONSTRUCTED UP TO AND INCLUDING THE INTERMEDIATE COURSE. WORK INCLUDES STORM SEWER, WATER MAIN, AEP UNDERGROUND CONDUIT, LIGHTING, AND SIGNING. A MINIMUM OF ONE LANE OF TRAFFIC IN EACH DIRECTION SHALL BE MAINTAINED ON S.R. 161; AND ONE LANE OF TRAFFIC SHALL BE MAINTAINED ON THE U.S. 33 EAST EXIT RAMP, AS SHOWN ON THE PHASE 1 AND PHASE 1A MAINTENANCE OF TRAFFIC PLANS, UTILIZING EXISTING PAVEMENT AND PAVEMENT FOR MAINTAINING TRAFFIC.

PHASE 1A ALSO INCLUDES THE REMOVAL OF THE EXISTING EITERMAN ROAD APPROACH PAVEMENT. EITERMAN ROAD TRAFFIC SHALL BE DETOURED AS SHOWN ON SHEET 22.

PHASE 2

PHASE 2 CONSISTS OF THE REMAINING CONSTRUCTION OF THE PROPOSED ROUNDABOUT; THE CONTINUED CONSTRUCTION OF THE APPROACH PAVEMENT ON S.R. 161; AND THE CONTINUED PART-WIDTH CONSTRUCTION OF THE U.S. 33 EAST EXIT RAMP. ALL PROPOSED PAVEMENT SHALL BE CONSTRUCTED UP TO AND INCLUDING THE INTERMEDIATE COURSE. WORK INCLUDES STORM SEWER, LIGHTING AND SIGNING. A MINIMUM OF ONE LANE OF TRAFFIC IN EACH DIRECTION SHALL BE MAINTAINED ON S.R. 161, AND ONE LANE OF TRAFFIC SHALL BE MAINTAINED ON THE U.S. 33 EAST EXIT AND ENTRANCE RAMPS, AS SHOWN ON THE PHASE 2 MAINTENANCE OF TRAFFIC PLANS, UTILIZING THE COMPLETED PAVEMENT AND PAVEMENT FOR MAINTAINING TRAFFIC.

LEFT TURNS FROM THE U.S. 33 EAST EXIT RAMP ONTO S.R. 161 EB SHALL BE RESTRICTED. THE U.S. 33 EAST TO S.R. 161 EB TRAFFIC SHALL BE DETOURED AS SHOWN ON SHEET 23.

PHASE 3

PHASE 3 CONSISTS OF THE REMAINING CONSTRUCTION OF THE APPROACH PAVEMENT ON S.R. 161 AND THE REMAINING PART-WIDTH CONSTRUCTION OF THE U.S. 33 EAST EXIT RAMP. ALL PROPOSED PAVEMENT SHALL BE CONSTRUCTED UP TO AND INCLUDING THE INTERMEDIATE COURSE. A MINIMUM OF ONE LANE OF TRAFFIC IN EACH DIRECTION SHALL BE MAINTAINED ON S.R. 161, AND ONE LANE OF TRAFFIC SHALL BE MAINTAINED ON THE U.S. 33 EAST EXIT AND ENTRANCE RAMPS, AS SHOWN ON THE PHASE 3 MAINTENANCE OF TRAFFIC PLANS, UTILIZING THE COMPLETED PAVEMENT.

LEFT TURNS FROM THE U.S. 33 EAST EXIT RAMP ONTO POST ROAD SHALL BE RESTRICTED. THE U.S. 33 EAST TO POST ROAD TRAFFIC SHALL BE DETOURED AS SHOWN ON SHEET 23.

SEQUENCE OF CONSTRUCTION (CONTINUED)

PHASE 4

PHASE 4 CONSISTS OF PLACING THE FINAL ASPHALT PAVEMENT SURFACE COURSE AND FINAL PAVEMENT MARKINGS ON THE ENTIRE PROJECT. DURING PLACEMENT OF THE FINAL PAVEMENT SURFACE COURSE, TRAFFIC SHALL BE MAINTAINED THROUGH THE USE OF FLAGGERS IN ACCORDANCE WITH ODOT STANDARD CONSTRUCTION DRAWINGS MT-95.30 AND MT-97.11. DURING FINAL PAVEMENT MARKING OPERATIONS, TRAFFIC SHALL BE MAINTAINED IN ACCORDANCE WITH MT-99.20.

ITEM 614 - MAINTAINING TRAFFIC (TIME LIMITATION ON A DETOUR)

A MINIMUM OF ONE LANE OF TRAFFIC IN EACH DIRECTION SHALL BE MAINTAINED AT ALL TIMES, EXCEPT FOR A PERIOD NOT TO EXCEED 30 CONSECUTIVE CALENDAR DAYS, WHEN THROUGH TRAFFIC MAY BE AS DETOURED AS SHOWN ON SHEETS 22 & 23. A DISINCENTIVE SHALL BE ASSESSED IN THE AMOUNT OF $ 4000 PER DAY FOR EACH CALENDAR DAY THE ROADWAY REMAINS CLOSED TO TRAFFIC BEYOND THE SPECIFIED LIMIT.

ITEM 614 - MAINTAINING TRAFFIC (ESTIMATED QUANTITIES)

THE FOLLOWING ESTIMATED QUANTITIES HAVE BEEN INCLUDED IN THE GENERAL SUMMARY FOR USE AS DETERMINED BY THE ENGINEER FOR THE MAINTENANCE OF TRAFFIC.

ITEM 410, TRAFFIC COMPACTED SURFACE, TYPE A OR B	10	CU. YD.
ITEM 616, WATER M. GAL.	50	M. GAL.

ITEM 614 - PORTABLE CHANGEABLE MESSAGE SIGN, AS PER PLAN

THE CONTRACTOR SHALL FURNISH, INSTALL, MAINTAIN AND REMOVE, WHEN NO LONGER NEEDED, A CHANGEABLE MESSAGE SIGN. THE SIGN SHALL BE OF A TYPE SHOWN ON A LIST OF APPROVED PCMS UNITS AVAILABLE ON THE OFFICE OF MATERIALS MANAGEMENT WEB PAGE. THE LIST CONTAINS CLASS A AND B UNITS WITH MINIMUM LEGIBILITY DISTANCES OF 650 FEET AND 475 FEET, RESPECTIVELY.

EACH SIGN SHALL BE TRAILER-MOUNTED AND EQUIPPED WITH A FUNCTIONAL DIMMING MECHANISM, TO DIM THE SIGN DURING DARKNESS, AND A TAMPER AND VANDAL PROOF ENCLOSURE. EACH SIGN SHALL BE PROVIDED WITH APPROPRIATE TRAINING AND OPERATION INSTRUCTIONS TO ENABLE ON-SITE PERSONNEL TO OPERATE AND TROUBLESHOOT THE UNIT. THE SIGN SHALL ALSO BE CAPABLE OF BEING POWERED BY AN ELECTRICAL SERVICE DROP FROM A LOCAL UTILITY COMPANY. THE PCMS SHALL BE DELINEATED IN ACCORDANCE WITH CMS 614.03.

THE PROBABLE PCMS LOCATIONS AND WORK LIMITS FOR THOSE LOCATIONS ARE SHOWN ON SHEET(S) OF THE PLAN. PLACEMENT, OPERATION, MAINTENANCE AND ALL ACTIVATION OF THE SIGNS BY THE CONTRACTOR SHALL BE AS DIRECTED BY THE ENGINEER. THE PCMS SHALL BE LOCATED IN A HIGHLY VISIBLE POSITION YET PROTECTED FROM TRAFFIC. THE CONTRACTOR SHALL, AT THE DIRECTION OF THE ENGINEER, RELOCATE THE PCMS TO IMPROVE VISIBILITY OR ACCOMMODATE CHANGED CONDITIONS. WHEN NOT IN USE, THE PCMS SHALL BE TURNED OFF. ADDITIONALLY, WHEN NOT IN USE FOR EXTENDED PERIODS OF TIME, THE PCMS SHALL BE TURNED AWAY FROM ALL TRAFFIC.

THE ENGINEER SHALL BE PROVIDED ACCESS TO EACH SIGN UNIT AND SHALL BE PROVIDED WITH APPROPRIATE TRAINING AND OPERATION INSTRUCTIONS TO ENABLE ODOT PERSONNEL TO OPERATE AND TROUBLESHOOT THE UNIT, AND TO REVISE SIGN MESSAGES, IF NECESSARY.

ALL MESSAGES TO BE DISPLAYED ON THE SIGN WILL BE PROVIDED BY THE ENGINEER. A LIST OF ALL REQUIRED PRE-PROGRAMMED MESSAGES WILL BE GIVEN TO THE CONTRACTOR AT THE PROJECT PRECONSTRUCTION CONFERENCE. THE SIGN SHALL HAVE THE CAPABILITY TO STORE UP TO 99 MESSAGES. MESSAGE MEMORY OR PRE-PROGRAMMED DISPLAYS SHALL NOT BE LOST AS A RESULT OF POWER FAILURES TO THE ON-BOARD COMPUTER. THE SIGN LEGEND SHALL BE CAPABLE OF BEING CHANGED IN THE FIELD. THREE-LINE PRESENTATION FORMATS WITH UP TO SIX MESSAGE PHASES SHALL BE SUPPORTED. PCMS FORMAT SHALL PERMIT THE COMPLETE MESSAGE FOR EACH PHASE TO BE READ AT LEAST TWICE.

ITEM 614 - PORTABLE CHANGEABLE MESSAGE SIGN, AS PER PLAN (CONTINUED)

THE PCMS SHALL CONTAIN AN ACCURATE CLOCK AND PROGRAMMING LOGIC WHICH WILL ALLOW THE SIGN TO BE ACTIVATED, DEACTIVATED OR MESSAGES CHANGED AUTOMATICALLY AT DIFFERENT TIMES OF THE DAY FOR DIFFERENT DAYS OF THE WEEK.

(THE PCMS SHALL CONTAIN A CELLULAR TELEPHONE DATA LINK WHICH WILL (IN ACTIVE CELLULAR PHONE AREAS) ALLOW REMOTE SIGN ACTIVATION, MESSAGE CHANGES, MESSAGE ADDITIONS AND REVISIONS TO TIME OF DAY PROGRAMS. THE SYSTEM SHALL ALSO PERMIT VERIFICATION OF CURRENT AND PROGRAMMED MESSAGES. ONE REMOTE DATA INPUT DEVICE (LAPTOP COMPUTER PLUS MODEM OR EQUIVALENT) SHALL BE

FURNISHED FOR USE BY THE DISTRICT TRAFFIC ENGINEER, OR EQUIVALENT, AND SHALL BE INSURED AGAINST THEFT.)

THE PCMS UNIT SHALL BE MAINTAINED IN GOOD WORKING ORDER BY THE CONTRACTOR IN ACCORDANCE WITH THE PROVISIONS OF CMS 614.07. THE CONTRACTOR SHALL, PRIOR TO ACTIVATING THE UNIT, MAKE ARRANGEMENTS, WITH AN AUTHORIZED SERVICE AGENT FOR THE PCMS, TO ASSURE PROMPT SERVICE IN THE EVENT OF FAILURE. ANY FAILURE SHALL NOT RESULT IN THE SIGN BEING OUT OF SERVICE FOR MORE THAN 12 HOURS, INCLUDING WEEKENDS. FAILURE TO COMPLY MAY RESULT IN AN ORDER TO STOP WORK AND OPEN ALL TRAFFIC LANES AND/OR IN THE DEPARTMENT TAKING APPROPRIATE ACTION TO SAFELY CONTROL TRAFFIC. THE ENTIRE COST TO CONTROL TRAFFIC, ACCRUED BY THE DEPARTMENT DUE TO THE CONTRACTOR'S NONCOMPLIANCE, WILL BE DEDUCTED FROM MONEYS DUE, OR TO BECOME DUE THE CONTRACTOR ON HIS CONTRACT.

THE CONTRACTOR SHALL BE RESPONSIBLE FOR 24-HOUR-PER-DAY OPERATION AND MAINTENANCE OF THESE SIGNS ON THE PROJECT FOR THE DURATION OF THE PHASES WHEN THE PLAN REQUIRES THEIR USE. PAYMENT FOR THE ABOVE DESCRIBED ITEM SHALL BE AT THE CONTRACT UNIT PRICE. PAYMENT SHALL INCLUDE ALL LABOR, MATERIALS, EQUIPMENT, FUELS, LUBRICATING OILS, SOFTWARE, HARDWARE AND INCIDENTALS TO PERFORM THE ABOVE DESCRIBED WORK.

ITEM 614, PORTABLE CHANGEABLE MESSAGE SIGN, AS PER PLAN	87	DAY

SHORT DURATION RAMP CLOSURES

FOR THE PURPOSE OF PERFORMING THE REQUIRED WORK OR WHEN REQUIRED BY THE INTERSTATE ENTRANCE RAMP CLOSURE NOTE, RAMPS MAY BE CLOSED FOR SHORT DURATIONS AND DETOURED IN ACCORDANCE WITH THE RAMP CLOSURE TABLE IF
APPROVED BY THE ENGINEER. RAMP CLOSURES ARE SUBJECT TO DISINCENTIVES. FOR ALL RAMP CLOSURES LASTING MORE THAN 12 HOURS BUT LESS THAN 60 HOURS, THE CONTRACTOR SHALL PROVIDE THE FOLLOWING:

- A MINIMUM OF TWO PORTABLE CHANGEABLE MESSAGE SIGNS (PCMS) PLACED, AS DIRECTED BY THE ENGINEER, TO WARN DRIVERS OF THE CLOSURE AND TO PROVIDE THE DESIGNATED DETOUR ROUTE.

- POSITIVE GUIDANCE ALONG THE DETOUR ROUTE WITH DETOUR SIGNS (M4-9 SERIES) IN ACCORDANCE WITH THE DETOUR SIGNS NOTE. FOR ALL RAMP CLOSURES LASTING LESS THAN 12 HOURS, THE CONTRACTOR SHALL PROVIDE THE FOLLOWING:

- A MINIMUM OF TWO PORTABLE CHANGEABLE MESSAGE SIGNS (PCMS) PLACED, AS DIRECTED BY THE ENGINEER, TO WARN DRIVERS OF THE CLOSURE AND TO PROVIDE THE DESIGNATED DETOUR ROUTE. WHEN CLOSING ENTRANCE RAMPS, CORRESPONDING LEAD-IN LANES AND TURN LANES SHALL ALSO BE CLOSED.

IF A DESIGNATED DETOUR ROUTE IS NOT PROVIDED IN THE PLANS, TRAFFIC SHALL BE DIRECTED TO THE NEXT INTERCHANGE, IF AVAILABLE, TO TURN AROUND. IF THE USE OF THE NEXT INTERCHANGE IS NOT POSSIBLE, AN ALTERNATIVE DETOUR ROUTE SHALL BE PROVIDED BY THE ENGINEER.

CALCULATED JWG
CHECKED RAK

MAINTENANCE OF TRAFFIC GENERAL NOTES

S.R. 161/EITERMAN RD. ROUNDABOUT

\\AKRN04\DATA\2013\2013945\UNI\88748\MOT\SHEETS\88748MN001.DGN
3/11/2015
10:50:49 AM
JGRIMM

NOTIFICATION OF CONSTRUCTION INITIATION

AT LEAST FOURTEEN DAYS PRIOR TO STARTING INITIAL CONSTRUCTION ACTIVITIES, THE CONTRACTOR SHALL ADVISE THE DISTRICT OFFICE OF COMMUNICATIONS VIA E-MAIL AT D06.PIO@DOT.STATE.OH.US, THE DISTRICT WORK ZONE TRAFFIC MANAGER VIA E-MAIL AT D06.MOT@DOT.STATE.OH.US AND THE CENTRAL OFFICE SPECIAL HAUL PERMITS SECTION BY FAX AT (614) 728 - 4099 OF THE ANTICIPATED IMPACT ON TRAFFIC. THE CONTRACTOR WILL IMMEDIATELY INFORM THE DISTRICT OFFICE OF COMMUNICATIONS AND THE DISTRICT WORK ZONE TRAFFIC MANAGER OF ANY AND ALL DELAYS AND/OR CHANGES REGARDING THE CONSTRUCTION INITIATION DATE.

NOTIFICATION OF TRAFFIC RESTRICTIONS

THROUGHOUT THE DURATION OF THE PROJECT, THE CONTRACTOR SHALL NOTIFY THE PROJECT ENGINEER IN WRITING OF ALL TRAFFIC RESTRICTIONS AND UPCOMING MAINTENANCE OF TRAFFIC CHANGES. THE CONTRACTOR SHALL ENSURE THE WRITTEN NOTIFICATION IS SUBMITTEDIN A TIMELY MANNER TO ALLOW THE PROJECT ENGINEER TO MEET THE REQUIRED TIME FRAMES SET FORTH IN THE TABLE BELOW. THIS NOTIFICATION SHALL BE RECEIVED BY THE PROJECT ENGINEER PRIOR TO THE PHYSICAL SETUP OF ANY APPLICABLE SIGNS OR MESSAGE BOARDS. INFORMATION SHOULD INCLUDE BUT IS NOT LIMITED TO ALL CONSTRUCTION ACTIVITIES THAT IMPACT OR INTERFERE WITH TRAFFIC AND SHOULD LIST THE SPECIFIC LOCATION, TYPE OF WORK, ROAD STATUS, DATE AND TIME OF RESTRICTION, DURATION OF RESTRICTION, NUMBEROF LANES MAINTAINED, DETOUR ROUTES IF APPLICABLE, AND ANY OTHER INFORMATION REQUESTED BY THE PROJECT ENGINEER.

NOTIFICATION TIME FRAME TABLE
ITEM DURATION OF CLOSURE NOTIFICATION DUE TO DISTRICT 6 COMMUNICATIONS OFFICE
RAMP & ROAD CLOSURES
>= 2 WEEKS 14 CALENDAR DAYS PRIOR TO CLOSURE
> 12 HOURS & < 2 WEEKS 7 CALENDAR DAYS PRIOR TO CLOSURE
< 12 HOURS 2 BUSINESS DAYS PRIOR TO CLOSURE

LANE CLOSURES & RESTRICTIONS
>= 2 WEEKS 7 CALENDAR DAYS PRIOR TO CLOSURE
< 2 WEEKS 2 BUSINESS DAYS PRIOR TO CLOSURE
ANY UNFORESEEN CONDITIONS NOT SPECIFIED IN THE PLANS REQUIRING TRAFFIC RESTRICTIONS SHALL ALSO BE REPORTED TO THE PROJECT ENGINEER USING THE NOTIFICATION TIME FRAME TABLE.

PUBLIC OUTREACH AND NOTIFICATION (ROAD CLOSURE)

THE CONTRACTOR SHALL BE RESPONSIBLE FOR CONTACTING THE DISTRICT 6 PUBLIC INFORMATION OFFICE VIA EMAIL AT D06.PIO@DOT.STATE.OH.US TO COORDINATE EFFORTS TO NOTIFY ALL LOCAL COUNTY, STATE AND FEDERAL EMERGENCY SERVICES, SCHOOL DISTRICTS AND ADJACENT RESIDENTS AND BUSINESSES OF THE UPCOMING CLOSURE. ADVANCE NOTIFICATION SHALL OCCUR NO LATER THAN FOURTEEN (14) DAYS PRIOR TO CLOSING THE ROAD. IF, SUBSEQUENT TO THE ADVANCE NOTIFICATION, THE START DATE IS CHANGED, THEN A NEW SEVEN (7) DAY NOTIFICATION WILL BE REQUIRED. THE ROAD CANNOT BE CLOSED UNLESS PRIOR NOTIFICATION HAS BEEN ACCOMPLISHED. THE SAME PARTIES SHALL BE NOTIFIED WHEN THE CLOSURE HAS CONCLUDED AND THE ROAD IS BACK OPEN TO TRAFFIC. ALL NOTIFICATIONS SHALL BE MADE UTILIZING THE TEMPLATE PROVIDED BY THE DISTRICT 6 PUBLIC INFORMATION OFFICE.

INGRESS/EGRESS

WORKSITE INGRESS AND EGRESS MEETING THE DESCRIPTIONS BELOW SHALL NOT OCCUR DURING PEAK HOURS. PEAK HOURS ARE CONSIDERED TO BE 5AM-9AM AND 3PM-6PM MONDAY-FRIDAY.

- ENTERING THE WORKSITE FROM RAMPS, INTERSTATE LOOKALIKE SHOULDERS OR INTERSTATE LOOK ALIKE LANES
- EXITING THE WORKSITE ONTO OR ALONGSIDE RAMPS, INTERSTATE LOOKALIKE SHOULDERS OR INTERSTATE LOOKALIKE LANES

ITEM 614 - LAW ENFORCEMENT OFFICER (WITH PATROL CAR) FOR ASSISTANCE DURING CONSTRUCTION OPERATIONS

USE OF LAW ENFORCEMENT OFFICERS (LEOS) BY CONTRACTORS OTHER THAN THE USES SPECIFIED BELOW WILL NOT BE PERMITTED AT PROJECT COST. LEOS SHOULD NOT BE USED WHERE THE OMUTCD INTENDS THAT FLAGGERS BE USED.

IN ADDITION TO THE REQUIREMENTS OF C&MS 614 AND THE OMUTCD, A UNIFORMED LEO WITH ANOFFICIAL PATROL CAR (CAR WITH TOP-MOUNTED EMERGENCY FLASHING LIGHTS AND COMPLETE MARKINGS OF THE APPROPRIATE LAW ENFORCEMENT AGENCY) SHALL BE PROVIDED FOR THE FOLLOWING TRAFFIC CONTROL TASKS:

- DURING THE ENTIRE ADVANCE PREPARATION AND CLOSURE SEQUENCE WHERE COMPLETE BLOCKAGE OF TRAFFIC IS REQUIRED.

IN ADDITION TO THE REQUIREMENT OF C&MS 614 AND THE OMUTCD, A UNIFORMED LEO WITH AN OFFICIAL PATROL CAR (CAR WITH TOP-MOUNTED EMERGENCY FLASHING LIGHTS AND COMPLETE MARKINGS OF THE APPROPRIATE LAW ENFORCEMENT AGENCY) SHOULD BE PROVIDED FOR THE FOLLOWING TRAFFIC CONTROL TASKS:

- FOR LANE CLOSURES: DURING INITIAL SET-UP PERIODS, TEAR DOWN PERIODS, SUBSTANTIAL SHIFTS OF A CLOSURE POINT OR WHEN NEW LANE CLOSURE ARRANGEMENTS ARE INITIATED FOR LONG-TERM LANE CLOSURES/SHIFTS (FOR THE FIRST AND LAST DAY OF MAJOR CHANGES IN TRAFFIC CONTROL SETUP). IN GENERAL, LEOS SHOULD BE POSITIONED AT THE POINT OF LANE RESTRICTION OR ROAD CLOSURE AND TO MANUALLY CONTROL TRAFFIC MOVEMENTS THROUGH INTERSECTIONS IN WORK ZONES.

- WHEN CONSTRUCTION VEHICLES ARE ENTERING/EXITING THE ZONE DIRECTLY FROM/INTO AN OPEN LANE OF TRAFFIC. IF A LANE HAS BEEN CLOSED TO PROVIDE AN ACCELERATION/ DECELERATION LANE FOR THE VEHICLE, THE LEO WILL NOT BE REQUIRED.

LEOS SHOULD NOT FORGO THEIR TRAFFIC CONTROL RESPONSIBILITIES TO APPREHEND MOTORISTS FOR ROUTINE TRAFFIC VIOLATIONS. HOWEVER, IF A MOTORIST'S ACTIONS ARE CONSIDERED TO BE RECKLESS, THEN PURSUIT OF THE MOTORIST IS APPROPRIATE.

THE LEOS WORK AT THE DIRECTION OF THE CONTRACTOR. THE CONTRACTOR IS RESPONSIBLE FOR SECURING THE SERVICES OF THE LEOS WITH THE APPROPRIATE AGENCIES AND COMMUNICATING THE INTENTIONS OF THE PLANS WITH RESPECT TO DUTIES OF THE LEOS. THE ENGINEER SHALL HAVE FINAL CONTROL OVER THE LEOS' DUTIES AND PLACEMENT, AND WILL RESOLVE ANY ISSUES THAT MAY ARISE BETWEEN THE TWO PARTIES.

THE LEO SHALL REPORT IN TO THE CONTRACTOR PRIOR TO THE START OF THE SHIFT, IN ORDER TO RECEIVE INSTRUCTIONS REGARDING SPECIFIC WORK ASSIGNMENTS DURING HIS/HER SHIFT. THE LEO IS EXPECTED TO STAY AT THE PROJECT SITE FOR THE ENTIRE DURATION OF HIS/HER SHIFT. THE LEO SHALL REPORT TO THE CONTRACTOR AT THE END OF HIS/HER SHIFT. ONCE THE LEO HAS COMPLETED THE DUTIES DESCRIBEDABOVE AND STILL HAS TIME REMAINING ON HIS/HER SHIFT, THE LEO MAY BE ASKED TO PATROL THROUGH THE WORK ZONE (WITH FLASHING LIGHTS OFF) OR BE PLACED AT A LOCATION TO DETER MOTORISTS FROM SPEEDING. SHOULD IT BE NECESSARY TO LEAVE THE PROJECT SITE, THE LEO SHALL NOTIFY THE ENGINEER.THE CONTRACTOR SHALL PROVIDE THE LEO WITH A TWO-WAY COMMUNICATION DEVICE WHICH SHALL BE RETURNED TO THE CONTRACTOR AT THE END OF HIS/HER SHIFT.

LEOS (WITH PATROL CAR) REQUIRED BY THE TRAFFIC MAINTENANCE TASKS ABOVE SHALL BE PAID FOR ON A UNIT PRICE (HOURLY) BASIS UNDER ITEM 614, LAW ENFORCEMENT OFFICER (WITH PATROL CAR) FOR ASSISTANCE. THE FOLLOWING ESTIMATED QUANTITIES HAVE BEEN CARRIED TO THE GENERAL SUMMARY.

ITEM 614, LAW ENFORCEMENT OFFICER WITH PATROL CAR FOR ASSISTANCE 40 HOURS

THE HOURS PAID SHALL INCLUDE ANY MINIMUM SHOW-UP TIME REQUIRED BY THE LAW ENFORCEMENT AGENCY INVOLVED.

ANY ADDITIONAL COSTS (ADMINISTRATIVE OR OTHERWISE) INCURRED BY THE CONTRACTOR TO OBTAIN THE SERVICES OF AN LEO ARE INCLUDED WITH THE BID UNIT PRICE FOR ITEM 614, LAW ENFORCEMENT OFFICER WITH PATROL CAR FOR ASSISTANCE.

ITEM 632, REMOVAL OF TRAFFIC SIGNAL INSTALLATION, AS PER PLAN

TRAFFIC SIGNAL INSTALLATIONS, INCLUDING SIGNAL HEADS, CABLE, MESSENGER WIRE, STRAIN POLES, CABINET, CONTROLLER, ETC., SHALL BE REMOVED IN ACCORDANCE WITH CMS 632.26 AND AS INDICATED ON THE PLANS. REMOVED ITEMS SHALL BE STORED ON THE PROJECT FOR SALVAGE AND BE DELIVERED TO ODOT DISTRICT 6, 400 EAST WILLIAM STREET DELAWARE, OHIO, 43015-2199, IN ACCORDANCE WITH THE LISTING GIVEN ON HEREIN ON SHEET 25. THE ODOT CONTACT PERSON FOR EQUIPMENT DELIVERY IS KRAIG SHREWSBERRY AT 740-833-8198.

THE CONTRACTOR SHALL REMOVE AND DISPOSE OF ALL ITEMS ON THE PROJECT NOT MARKED FOR SALVAGE AND DELIVERY TO THE LOCAL AGENCY AT NO ADDITIONAL COST TO THE PROJECT.

ITEM 614 - MAINTAINING TRAFFIC (NOTICE OF CLOSURE SIGN)

NOTICE OF CLOSURE SIGNS, W20-H13, SHALL BE ERECTED BY THE CONTRACTOR AT LEAST ONE WEEK IN ADVANCE OF THE SCHEDULED ROAD OR RAMP CLOSURE. THERE SHALL BE ONE SIGN PER DIRECTION OF TRAFFIC AND THE SIGNS SHALL BE ERECTED ON THE RIGHT-HAND SIDE OF THE ROAD/RAMP FACING TRAFFIC. THEY SHALL BE PLACED SO AS NOT TO INTERFERE WITH THE VISIBILITY OF ANY OTHER TRAFFIC CONTROL SIGNS. ON ROADWAYS, THEY SHOULD BE ERECTED AT THE POINT OF CLOSURE. THE SIGNS MAY BE ERECTED ANYWHERE ON RAMPS AS LONG AS THEY ARE VISIBLE TO THE MOTORISTS USING THE RAMP. ON ENTRANCE RAMPS, THE SIGN SHALL BE ERECTED WELL IN ADVANCE OF THE MERGE AREA TO AVOID DISTRACTING MOTORISTS. THE PHONE NUMBER AT THE BOTTOM OF THE SIGN SHALL BE THE DISTRICT 6 PUBLIC INFORMATION CONSTRUCTION LINE (740)833-8268.

USE OF WEIGHTED CHANNELIZERS

THE WEIGHTED CHANNELIZER MAY BE USED IN ACCORDANCE WITH THIS SECTION. THE WEIGHTED CHANNELIZER SHALL BE PREDOMINANTLY ORANGE IN COLOR AND SHALL BE MADE OF LIGHTWEIGHT, FLEXIBLE, AND DEFORMBABLE MATERIAL. THEY SHALL BE AT LEAST 42 INCHES IN HEIGHT WITH A WEIGHTED BASE. THEY MAY HAVE A HANDLE OR LIFTING DEVICE WHICH EXTENDS ABOVE THE 42 INCHES MINIMUM HEIGHT.

THE MARKINGS ON THE WEIGHTED CHANNELIZER SHALL BE HORIZONTAL, CIRCUMFERENTIAL, ALTERNATING ORANGE AND WHITE RETROREFLECTIVE STRIPES 6 INCHES WIDE. EACH WEIGHTED CHANNELIZER SHALL HAVE A MINIMUM OF TWO ORANGE AND TWO WHITE STRIPES. ANY NONRETROREFLECTIVE SPACES BETWEEN THE HORIZONTAL ORANGE AND WHITE STRIPES SHALL NOT EXCEED 2 INCHES WIDE. THE WEIGHTED CHANNELIZER SHALL HAVE A 4-INCH MINIMUM WIDTH, REGARDLESS OF ORIENTATION.

USE OF WEIGHTED CHANNELIZERS ON FREEWAYS AND MULTILANE HIGHWAYS SHALL BE LIMITED TO SHORT-TERM OPERATIONS FOR EITHER DAY OR NIGHT. UPON COMPLETION OF WORK, THE WEIGHTED CHANNELIZERS SHALL BE REMOVED. THE WEIGHTED CHANNELIZERS MAY AGAIN BE PLACED ON THE HIGHWAY WHEN THE WORK IS TO RESUME ON THE FOLLOWING DAY OR NIGHT. ANY LANE CLOSURE USING CHANNELIZATION DEVICES, EXPECTED TO REMAIN FOR MORE THAN TWELVE HOURS, SHALL REQUIRE THE USE OF DRUMS OR BARRICADES.

WHEN USED AT NIGHT, WEIGHTED CHANNELIZERS SHALL ONLY BE PLACED IN THE TANGENT AREA AND AT A MAXIMUM SPACING OF 40 FEET. THE TANGENT AREA IS DEFINED AS THE AREA AFTER THE TRANSITION TAPER WHERE THE WORK TAKES PLACE. DRUMS SHALL BE USED IN THE TRANSITION TAPERS FOR NIGHT OPERATIONS.

STEPS SHOULD BE TAKEN TO ENSURE THAT THE WEIGHTED CHANNLEIZERS WILL NOT BE BLOWN OVER OR DISPLACED BY WIND OR MOVING TRAFFIC. BALLASTS SHOULD NOT PRESENT A HAZARD IF THE WEIGHTED CHANNELIZERS ARE IN ADVERTENTLY STRUCK, NOR SHOULD THEY AFFECT THE VISIBILITY OF THE WEIGHTED CHANNELIZERS. ALL BALLASTS USED SHOULD BE IN ACCORDANCE WITH THE MANUFACTURER'S SPECIFICATIONS.

PAYMENT SHALL BE INCLUDED IN THE LUMP SUM CONTRACT PRICE FOR ITEM 614 MAINTAINING TRAFFIC.

MAINTENANCE OF TRAFFIC

THIS ITEM SHALL CONSIST OF MAINTENANCE OF TRAFFIC ON EXISTING ROADWAYS AND RAMPS IN ACCORDANCE WITH THE OHIO MANUAL OF UNIFORM TRAFFIC CONTROL DEVICES FOR STREETS AND HIGHWAYS, CURRENT EDITION, LATEST REVISION, THE SPECIFICATIONS AND THE FOLLOWING:

1. A MINIMUM OF ONE TEN FOOT LANE IN EACH DIRECTION SHALL BE MAINTAINED ON THE EXISTING PAVEMENT, (COMPLETED PAVEMENT AND TEMPORARY PAVEMENT) DURING CONSTRUCTION OF THE WORK.

2. THE CONTRACTOR SHALL INFORM THE DISTRICT (740) 833-8000 AND THE CITY OF DUBLIN ENGINEERING (614) 410-4600, EIGHTEEN (18) DAYS PRIOR TO THE BEGINNING OF WORK.

3. CONES SHALL NOT BE ACCEPTABLE TRAFFIC CONTROL DEVICES FOR LANE RESTRICTIONS OR LANE REDUCTIONS THAT ARE IN OPERATION ONE-HALF HOUR AFTER SUNSET OR ONE HALF-HOUR BEFORE SUNRISE. ALL NIGHTTIME LANE RESTRICTIONS SHALL REQUIRE DRUMS OR BARRICADES AT A MAXIMUM SPACING OF FIFTY (50) FEET. WEIGHTED CHANNELIZERS MAY BE USED IN ACCORDANCE WITH THE STANDARD CONSTRUCTION DRAWINGS.

4. THE CONTRACTOR SHALL FURNISH, ERECT, MAINTAIN AND SUBSEQUENTLY REMOVE ALL FLAGS, BARRICADES, SIGNS, SIGN SUPPORTS AND FURNISH AND MAINTAIN ALL FLAGGERS, WATCHERS AND INCIDENTALS RELATED THERETO.

5. ALL FULL DEPTH PAVEMENT REMOVAL AND REPLACEMENT OPERATIONS SHALL BE COMPLETED THE SAME DAY THE EXCAVATION IS MADE. IF THE CONTRACTOR CANNOT COMPLETE THE WORK. THE EXCAVATION SHALL BE BACKFILLED OR PROTECTED AS SHOWN IN THE PLANS.

6. TRUCK MOUNTED ATTENUATORS (TMA'S) SHALL BE USED AS SHOWN IN THE STANDARD CONSTRUCTION DRAWINGS.

7. ONLY DURING OFF-PEAK PERIODS (ie ANY PERIOD OTHER THAN 6-8AM AND 3-6PM) SHALL THE CONTRACTOR INSTALL AND SUBSEQUENTLY RESET ALL TRAFFIC CONTROL NECESSARY FOR THE WORK ZONE FOR EACH CONSTRUCTION PHASE.

8. PRIOR TO OPENING TO TRAFFIC EACH LANE SHALL BE IN A SAFE, PASSABLE CONDITION. ALL TRANSVERSE JOINTS SHALL EXTEND ACROSS THE FULL LANE AND SHOULDER WIDTH AND EACH LANE SHALL BE FREE FROM UNEVEN LONGITUDINAL JOINTS. THE CONTRACTOR SHALL PROVIDE ASPHALT WEDGES FOR TRANSVERSE JOINTS WHEREVER THERE ARE PAVEMENT ELEVATION DIFFERENCES. THE ASPHALT WEDGE SHALL BE PLACED ALONG THE CONSTRUCTED GUTTER PLATE FOR MAINTENANCE OF TRAFFIC PURPOSES.

ALL WORK AND TRAFFIC CONTROL DEVICES SHALL BE IN ACCORDANCE WITH CMS 614 AND OTHER APPLICABLE PORTIONS OF THE SPECIFICATIONS AS WELL AS THE OHIO MANUAL OF UNIFORM TRAFFIC CONTROL DEVICES. PAYMENT FOR ALL LABOR, EQUIPMENT AND MATERIALS SHALL BE INCLUDED IN THE LUMP SUM CONTRACT PRICE FOR ITEM 614, MAINTAINING TRAFFIC, UNLESS SEPARATELY ITEMIZED AND OTHERWISE NOTED IN THE PLAN.

TRENCH FOR WIDENING

TRENCH EXCAVATION FOR BASE WIDENING SHALL BE ONLY ON ONE SIDE OF THE PAVEMENT AT A TIME. THE OPEN TRENCH SHALL BE ADEQUATELY MAINTAINED AND PROTECTED WITH DRUMS OR BARRICADES AT ALL TIMES. PLACEMENT OF PROPOSED SUBBASE AND BASE MATERIAL SHALL FOLLOW AS CLOSELY AS POSSIBLE BEHIND EXCAVATION OPERATIONS. THE LENGTH OF WIDENING TRENCH WHICH IS OPEN AT ANY ONE TIME SHALL BE HELD TO A MINIMUM AND SHALL AT ALL TIMES BE SUBJECT TO APPROVAL OF THE ENGINEER.

DUST CONTROL

THE CONTRACTOR SHALL FURNISH AND APPLY WATER FOR DUST CONTROL AS DIRECTED BY THE ENGINEER. THE FOLLOWING ESTIMATED QUANTITIES HAVE BEEN INCLUDED FOR DUST CONTROL PURPOSES:

ITEM 616, WATER 60 M. GAL.

\\AKRNB4\DATA\2013\2013945\UNI\80748\MOT\SHEETS\80748MN002.DGN
1/13/2015
3:59:52 PM
MSUMMERVILLE

SHEET NO.	REFERENCE NO.	LOCATION	STATION FROM	STATION TO	SIDE	614 WORK ZONE LANE LINE, CLASS I FT	614 WORK ZONE CENTER LINE, DOUBLE SOLID, CLASS I FT	614 WORK ZONE EDGE LINE, WHITE, CLASS I FT	614 WORK ZONE EDGE LINE, YELLOW, CLASS I FT	614 WORK ZONE CHANNELIZING LINE, CLASS I FT	614 WORK ZONE STOP LINE, CLASS I FT	614 WORK ZONE ARROW, CLASS I EACH	615 PAVEMENT FOR MAINTAINING TRAFFIC, CLASS A SY
24	W-1	S.R. 161	39+17	41+00	LT			183					
24	W-2	S.R. 161	37+93	41+00	RT			307					
25	DY-1	S.R. 161	41+13	46+50	RT		537						
25	W-3	S.R. 161	41+00	46+50	RT/LT			550					
25	W-4	EITERMAN RD / S.R. 161	28+50	46+50	RT			445					
25	W-5	S.R. 161 / EITERMAN RD	41+00	28+03	RT			349					
26	LL-1	S.R. 161	48+95	50+43	LT	148							
26	W-6	S.R. 161	46+50	51+27	RT			527					
26	W-7	S.R. 161	46+50	50+50	LT			529					
26	Y-1	S.R. 161	51+01	51+17	LT				54				
26	SL-1A	S.R. 161	50+88		LT.						23		
26		S.R. 161	47+88	50+37	LT								109
26		S.R. 161	50+75	51+20	LT								135
26		S.R. 161	51+20	51+75	LT								31
27		S.R. 161	51+75	53+44	LT								64
28	W-8	EITERMAN RD	28+50	31+23	RT			273					
29	W-9	S.R. 161	49+68	50+77	LT			319					
29	Y-2	S.R. 161	50+15	50+87	LT				211				
29		S.R. 161	50+04	50+75	LT								187
29	W-10	S.R. 161	42+50	44+09	RT			159					
TOTALS CARRIED TO GENERAL SUMMARY						148	537	3,641	265		23		527
MILE						0.03	0.11	0.74					

CALCULATED DTP
CHECKED RAK

MAINTENANCE OF TRAFFIC SUBSUMMARY - PHASE 1

S.R. 161/ EITERMAN RD. ROUNDABOUT

\\AKRN04\DATA\2013\2813945\UNI\80748\MOT\SHEETS\80748HS001.DGN
1/13/2015
4:18:26 PM
NSUMMERVILLE

SHEET NO.	REFERENCE NO.	LOCATION	STATION FROM	STATION TO	SIDE	614 WORK ZONE LANE LINE, CLASS I	614 WORK ZONE CENTER LINE, DOUBLE SOLID, CLASS I	614 WORK ZONE EDGE LINE, WHITE, CLASS I	614 WORK ZONE EDGE LINE, YELLOW, CLASS I	614 WORK ZONE CHANNELIZING LINE, CLASS I	614 WORK ZONE STOP LINE, CLASS I	614 WORK ZONE ARROW, CLASS I	615 PAVEMENT FOR MAINTAINING TRAFFIC, CLASS A
						FT	FT	FT	FT	FT	FT	EACH	SY
34	W-11	S.R. 161	39+00	41+00	LT			200					
34	W-12	S.R. 161	38+00	41+00	RT			300					
34	Y-3	S.R. 161	39+02	41+00	RT				198				
35	SL-1	S.R. 161	45+34		RT						21		
35	W-13	EITERMAN RD / S.R. 161	6010+50	46+50	RT			210					
35	W-14	S.R. 161 / EITERMAN RD	42+38	6011+07	RT			175					
35	W-15	S.R. 161	41+00	42+08	RT			108					
35	Y-4	S.R. 161	41+00	46+50	LT				627				
35	Y-5	S.R. 161	41+00	46+50	RT				550				
36	CL-1	S.R. 161	48+55	49+35	RT					80			
36	CL-2	S.R. 161	48+55	49+35	RT					80			
36	LA-1	S.R. 161	50+56		LT							1	
36	SL-2	S.R. 161	50+52		LT						33		
36	W-16	S.R. 161	47+05	50+62	LT			472					
36	W-17	S.R. 161	50+66	51+75	LT			115					
36	W-18	S.R. 161	49+35	51+10	RT			175					
36	W-19	S.R. 161	46+50	50+88	RT			450					
36	Y-6	S.R. 161	50+66	5071	LT				100				
36	Y-7	S.R. 161	46+50	51+75	LT				525				
36	Y-8	S.R. 161	49+35	50+96	RT				175				
37	CL-3	S.R. 161	51+93	53+65	LT					172			
37	CL-4	S.R. 161	51+93	53+65	LT					172			
37	LA-2	S.R. 161	52+03		LT							1	
37	LA-3	S.R. 161	52+69		LT							1	
37	LA-4	S.R. 161	53+35		LT							1	
37	W-20	S.R. 161	51+75	53+44	LT			169					
37	Y-9	S.R. 161	51+75	51+93	LT				18				
38	DY-2	EITERMAN RD	100+14	102+21	LT		207						
38	DY-3	EITERMAN RD	6010+00	6010+14	LT		14						
38	DY-4	EITERMAN RD	100+14	102+21	RT		207						
38	W-21	EITERMAN RD	6010+00	6010+14	RT			14					
38	W-22	EITERMAN RD	101+42	102+21	RT			79					
39	Y-10	S.R. 161	50+64	50+72	LT				8				
TOTALS CARRIED TO GENERAL SUMMARY							428	2,467	2,201	504	54	4	
MILE							0.09	0.89					

CALCULATED DTP
CHECKED RAK

MAINTENANCE OF TRAFFIC SUBSUMMARY - PHASE 2

S.R. 161/ EITERMAN RD. ROUNDABOUT

\\MKRN04\DATA\2013\2013945\UNI\98748\MOT\SHEETS\98748HS002.DGN
1/13/2015
4:19:41 PM
MSUMMERVILLE

SHEET NO.	REFERENCE NO.	LOCATION	STATION FROM	STATION TO	SIDE	614 WORK ZONE LANE LINE, CLASS I (FT)	614 WORK ZONE CENTER LINE, DOUBLE SOLID, CLASS I (FT)	614 WORK ZONE EDGE LINE, WHITE, CLASS I (FT)	614 WORK ZONE EDGE LINE, YELLOW, CLASS I (FT)	614 WORK ZONE CHANNELIZING LINE, CLASS I (FT)	614 WORK ZONE STOP LINE, CLASS I (FT)	614 WORK ZONE ARROW, CLASS I (EACH)	615 PAVEMENT FOR MAINTAINING TRAFFIC, CLASS A (SY)
40	W-23	S.R. 161	47+05	50+61	LT			411					
40	Y-11	S.R. 161	46+87	50+75	LT				485				
40	W-24	S.R. 161	46+87	51+75	LT			488					
40	LA-5	S.R. 161	50+71		LT							1	
41	W-25	S.R. 161	51+75	52+28	LT			53					
42	LA-5	S.R. 161	57+40		LT							1	
42	LA-6	S.R. 161	58+06		LT							1	
42	CL-5	S.R. 161	57+30	58+30	LT					100			
TOTALS CARRIED TO GENERAL SUMMARY								952	485	100		3	
MILE								0.28					

CALCULATED DTP
CHECKED RAK

MAINTENANCE OF TRAFFIC SUBSUMMARY - PHASE 3

S.R. 161/ EITERMAN RD. ROUNDABOUT

\\AKRN04\DATA\2013\2013945\UNI\68748\MOT\SHEETS\68748MS003.DGN
1/13/2015
4:38:44 PM
MSUMMERVILLE

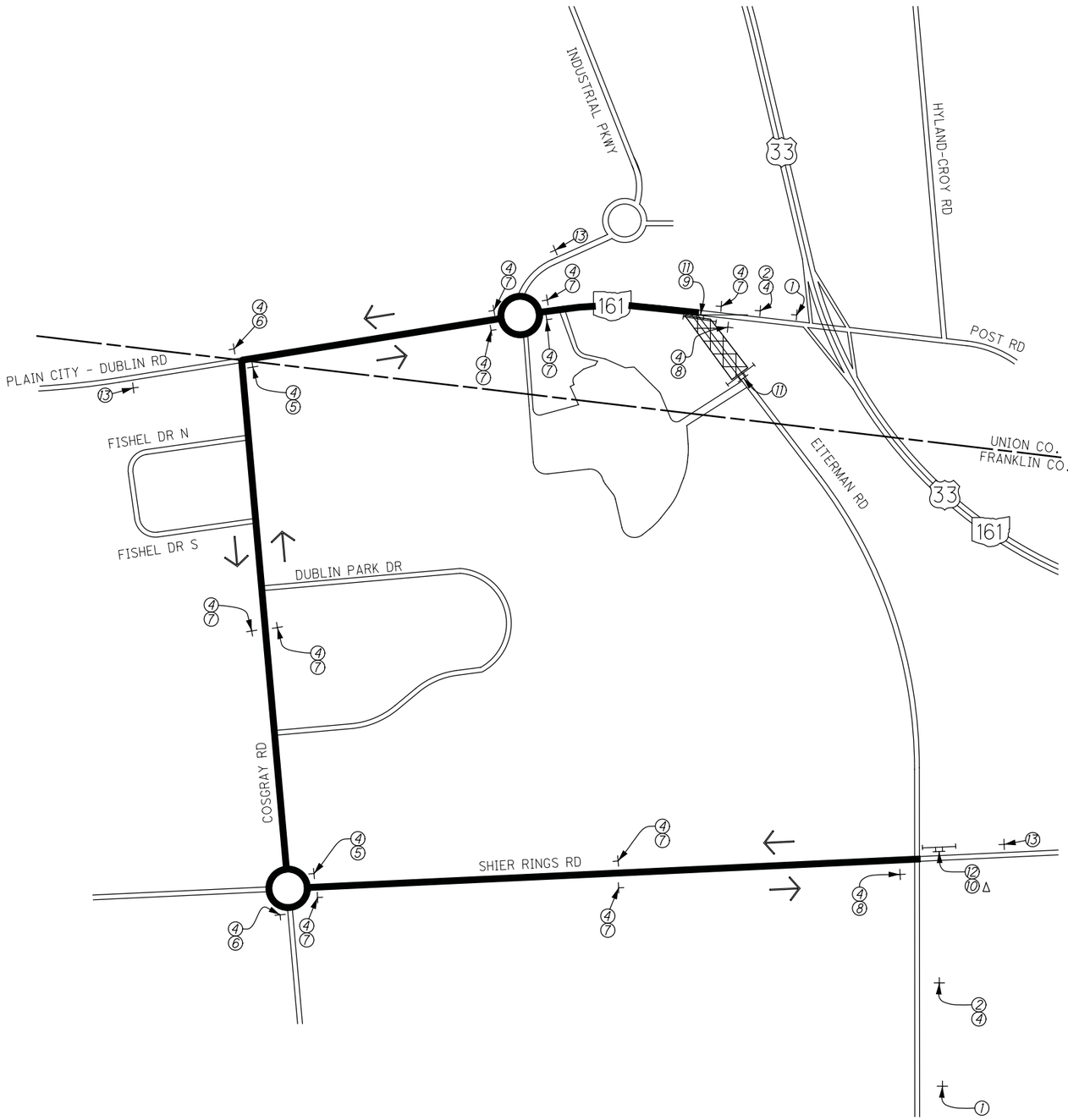

NOT TO SCALE

ROAD CLOSED AHEAD

TYPE 'A' WARNING LIGHT
W20-3-36
①

DETOUR AHEAD

TYPE 'A' WARNING LIGHT
W20-2-36
②

Eiterman Rd
D3-1-42
④

DETOUR
M4-9R-30
⑤

DETOUR
M4-9L-30
⑥

DETOUR
M4-H9T-30
⑦

END DETOUR
M4-8a-24
⑧

DETOUR
M4-10R-48
⑨

DETOUR
M4-10L-48
⑩

ROAD CLOSED
R11-2-48
MOUNTED ON TYPE 3 BARRICADE WITH TYPE B FLASHING WARNING LIGHTS (COMPLETE CLOSURE)
⑪

ROAD CLOSED
1.2 MILES AHEAD
LOCAL TRAFFIC ONLY
R11-3a-60
MOUNTED ON A TYPE 3 BARRICADE
⑫

PCMS
PORTABLE CHANGEABLE MESSAGE SIGN
⑬

EITERMAN RD. CLOSED AT S.R. 161
MESSAGE

USE COSGRAY RD.
MESSAGE

NOT USED: ③

Δ TYPE 3 BARRICADE SET ADJACENT TO THE EDGE OF TRAVELED WAY FACING ONCOMING TRAFFIC

LEGEND	
⊤	SIGN
⊤⊥	TYPE 3 BARRICADE
	CLOSURE AREA
	DETOUR ROUTE

CALCULATED JWG
CHECKED RAK

DETOUR PLAN (EITERMAN ROAD) - PHASE 1A

S.R. 161/EITERMAN RD. ROUNDABOUT

\\AKRNB4\DATA\2013\2013945\UNI\80748\MOT\SHEETS\80748MG001.DGN
1/13/2015
3:54:19 PM
MSUMMERVILLE

NOT TO SCALE

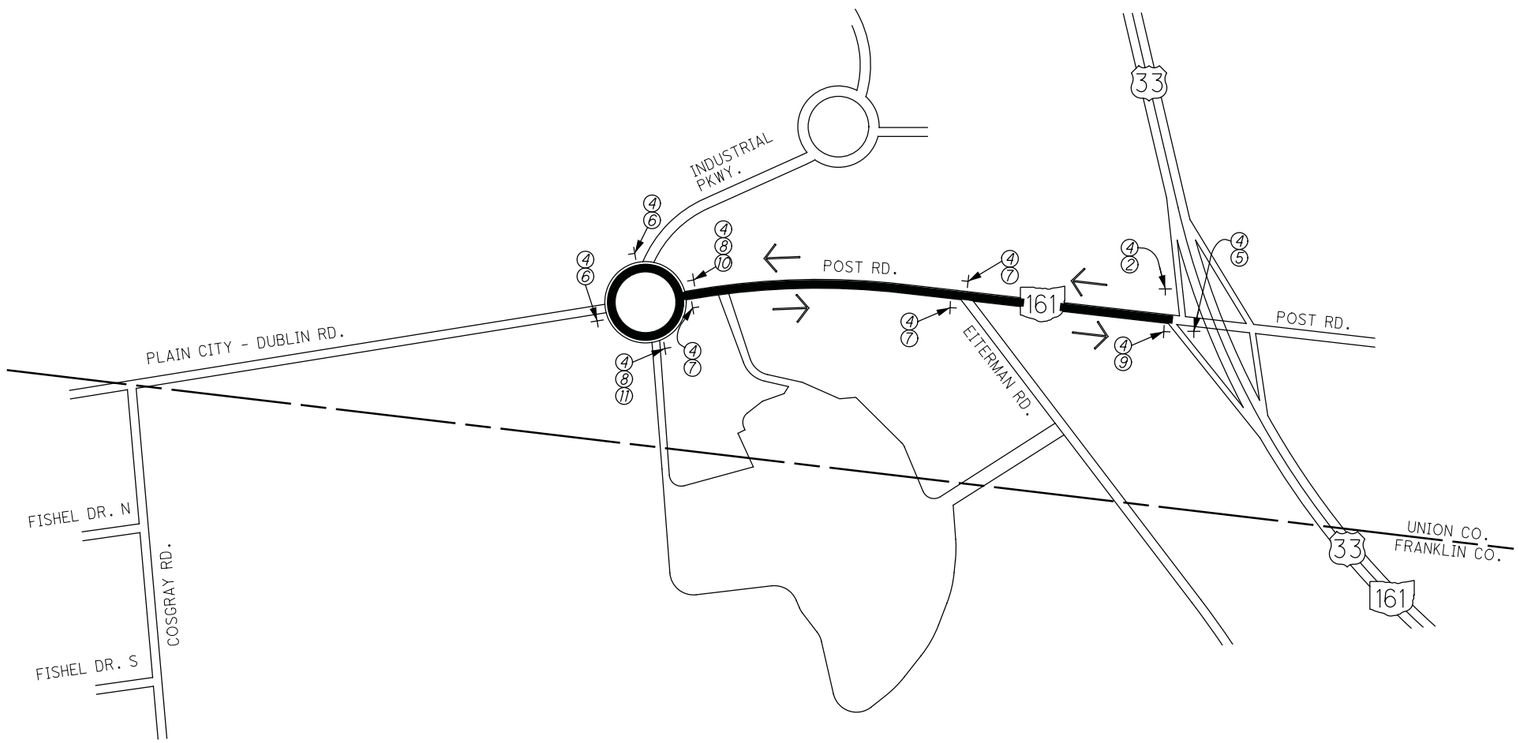

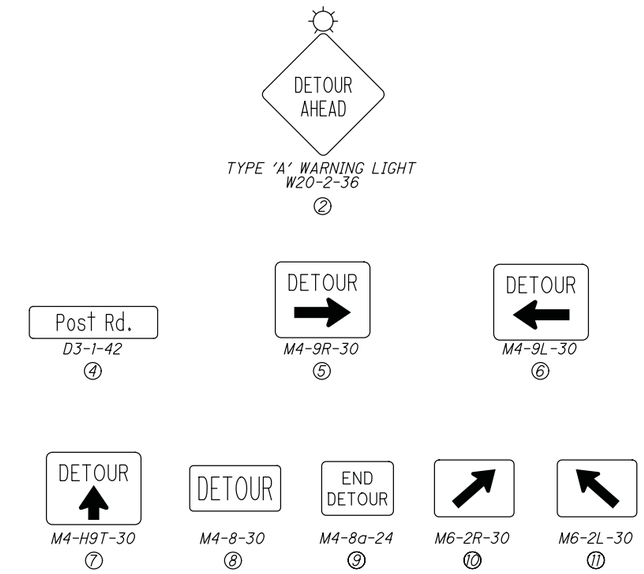

NOT USED: ① & ③

Δ TYPE 3 BARRICADE SET ADJACENT TO THE EDGE OF TRAVELED WAY FACING ONCOMING TRAFFIC

LEGEND	
⊢	SIGN
⊢⊣	TYPE 3 BARRICADE
▨	CLOSURE AREA
▬	DETOUR ROUTE

CALCULATED JWG
CHECKED RAK

DETOUR PLAN (U.S. 33 EAST TO POST ROAD - PHASES 2 & 3

S.R. 161/ EITERMAN RD. ROUNDABOUT

\\AKRN04\DATA\2013\2013945\INI\80748\MOT\SHEETS\80748MG002.DGN
1/13/2015
4:24:28 PM
WSUMMERVILLE

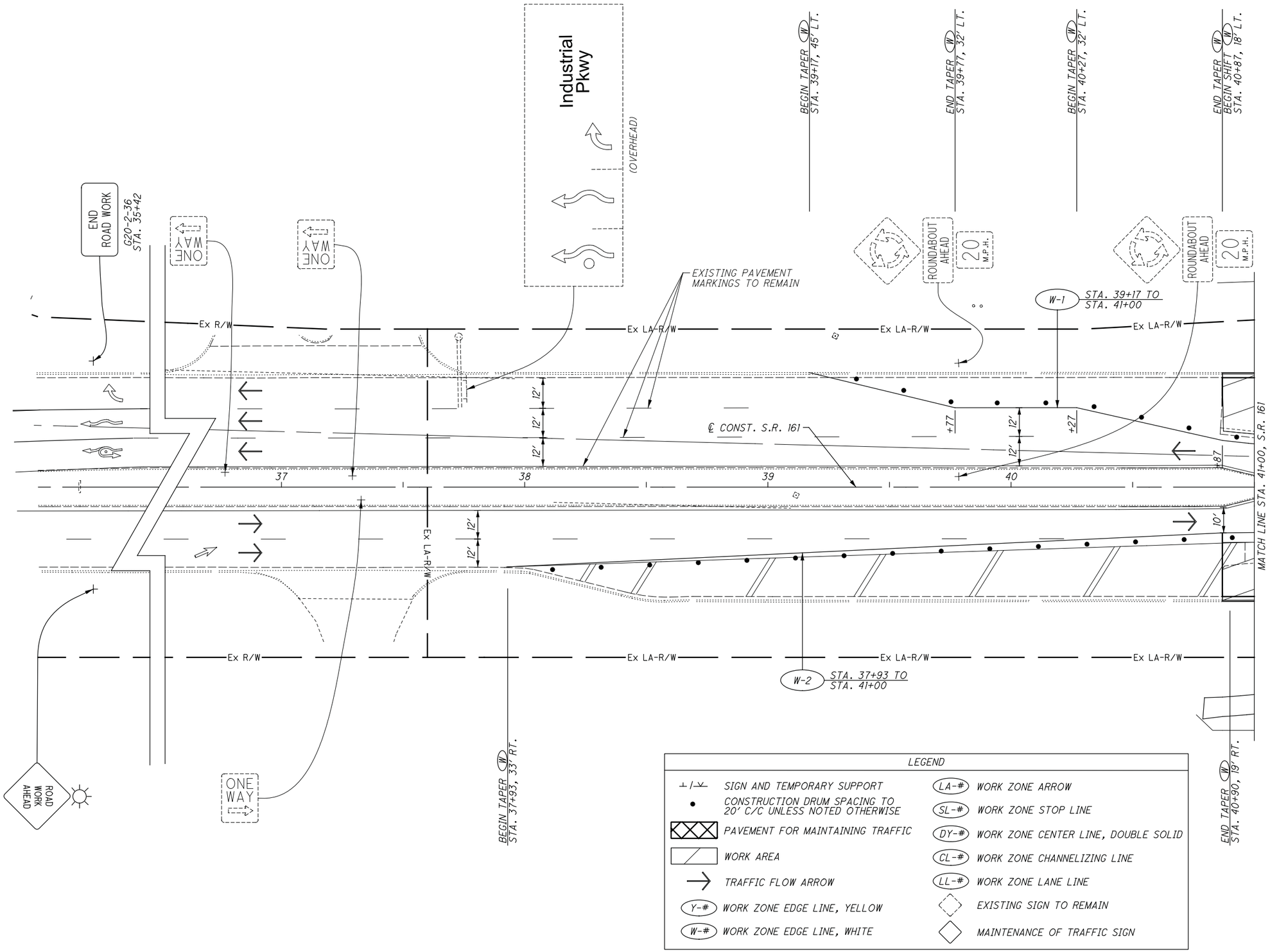

\\AKRN04\DATA\2013\2013945\UNI\80748\MOT\SHEETS\80748MP001.DGN
1/13/2015
4:00:09 PM
MSUMMERVILLE

N

0 10 20 40
HORIZONTAL SCALE IN FEET

CALCULATED JWG
CHECKED RAK

MAINTENANCE OF TRAFFIC PLAN - PHASE 1
BEGIN TO STA. 41+00 (S.R. 161)

S.R. 161/ EITERMAN RD.
ROUNDABOUT

LEGEND			
	SIGN AND TEMPORARY SUPPORT	LA-#	WORK ZONE ARROW
•	CONSTRUCTION DRUM SPACING TO 20' C/C UNLESS NOTED OTHERWISE	SL-#	WORK ZONE STOP LINE
	PAVEMENT FOR MAINTAINING TRAFFIC	DY-#	WORK ZONE CENTER LINE, DOUBLE SOLID
	WORK AREA	CL-#	WORK ZONE CHANNELIZING LINE
→	TRAFFIC FLOW ARROW	LL-#	WORK ZONE LANE LINE
Y-#	WORK ZONE EDGE LINE, YELLOW		EXISTING SIGN TO REMAIN
W-#	WORK ZONE EDGE LINE, WHITE		MAINTENANCE OF TRAFFIC SIGN

ITEM 632 - REMOVAL OF TRAFFIC SIGNAL INSTALLATION, AS PER PLAN

QUANTITY	REMOVED ITEM DESCRIPTION	DELIVERED TO ODOT D-6	DISPOSED OF BY PROJECT
1	CONTROLLER CABINET W/ ALL EQUIPMENT	X	
8	VEHICULAR SIGNAL HEADS	X	
2	SIGNAL POLES (BOLTED)	X	
LUMP	SIGNAL CONDUIT		X
LUMP	SIGNAL PULL BOXES		X
LUMP	SIGNAL CABLE		X
LUMP	MESSENGER / TETHER WIRE		X
2	POLE FOUNDATION		X
1	CONTROLLER FOUNDATION		X

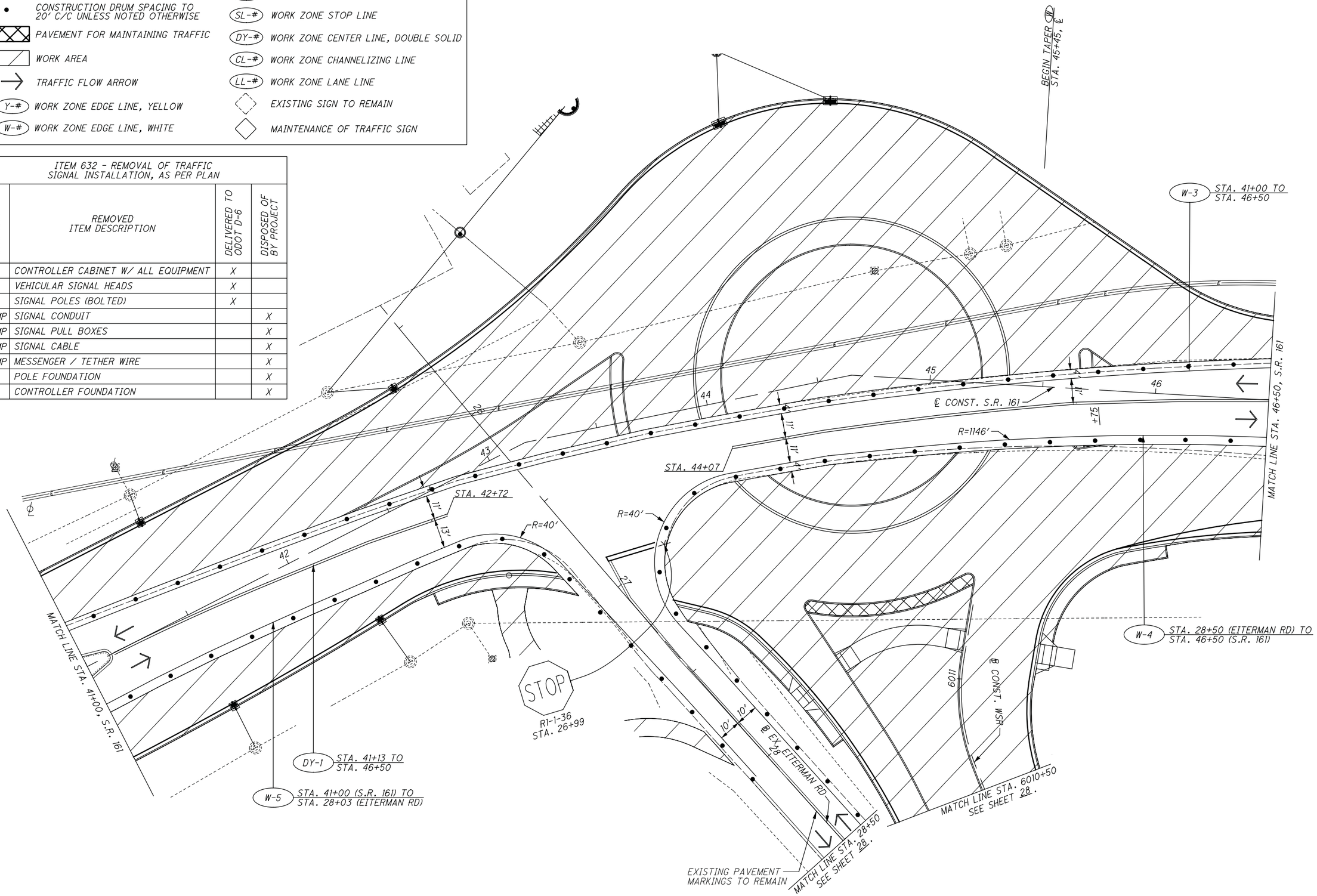

CALCULATED JWG
CHECKED RAK

MAINTENACE OF TRAFFIC PLAN - PHASE 1
STA. 41+00 TO STA. 46+50 (S.R. 161)

S.R. 161/ EITERMAN RD. ROUNDABOUT

\\AKRN04\DATA\2013\2013945\UNIT\88748\MOT\SHEETS\88748MP002.DGN
1/13/2015
4:00:56 PM
MSUMMERVILLE

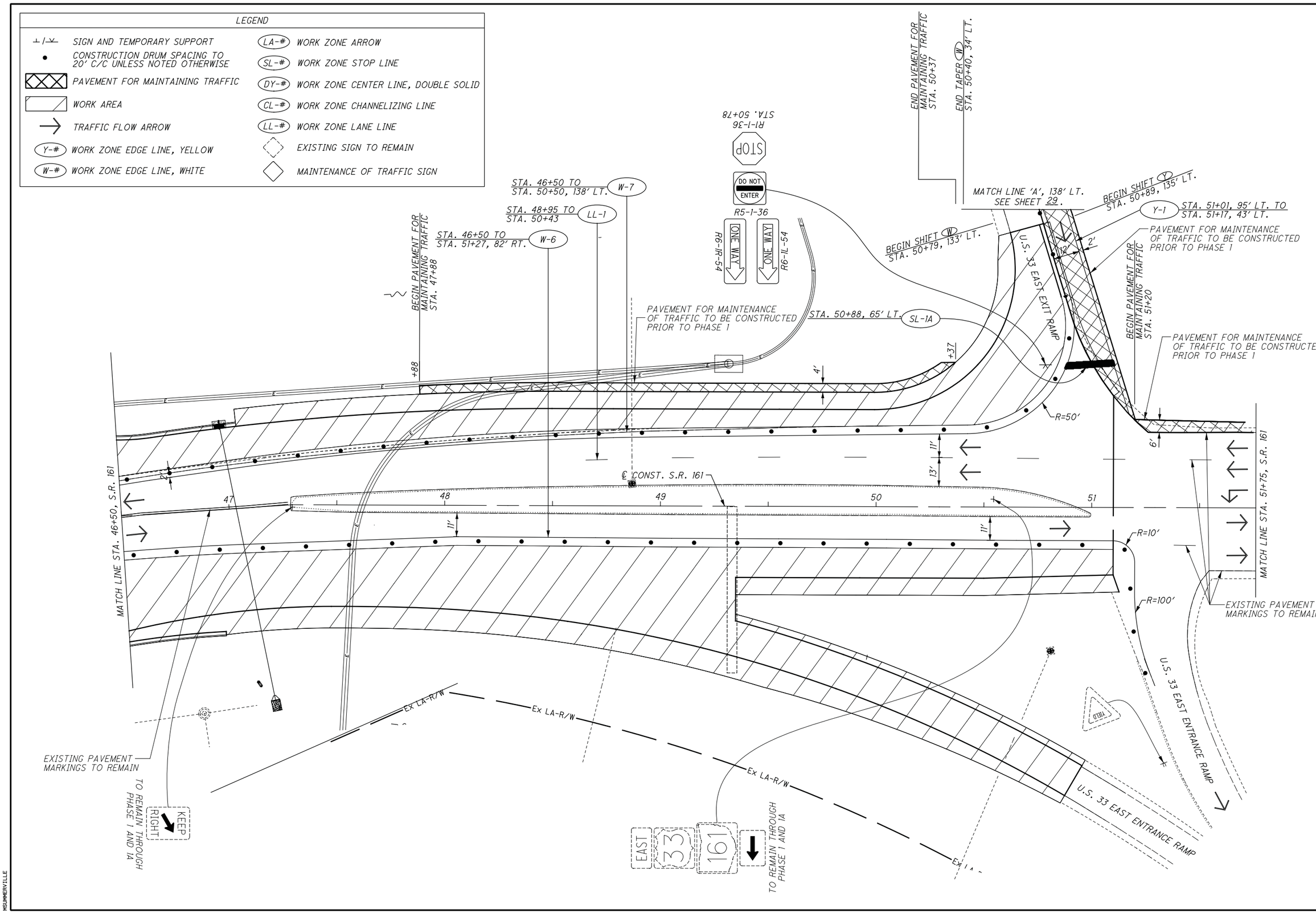

HORIZONTAL SCALE IN FEET 0 10 20 40

CALCULATED JWG
CHECKED RAK

MAINTENACE OF TRAFFIC PLAN - PHASE 1
STA. 46+50 TO STA. 51+75 (S.R. 161)

S.R. 161/ EITERMAN RD. ROUNDABOUT

\\AKRN04\DATA\2013\2013945\INI\80748\MOT\SHEETS\80748MP003.DGN
1/13/2015
4:01:49 PM
MSUMMERVILLE

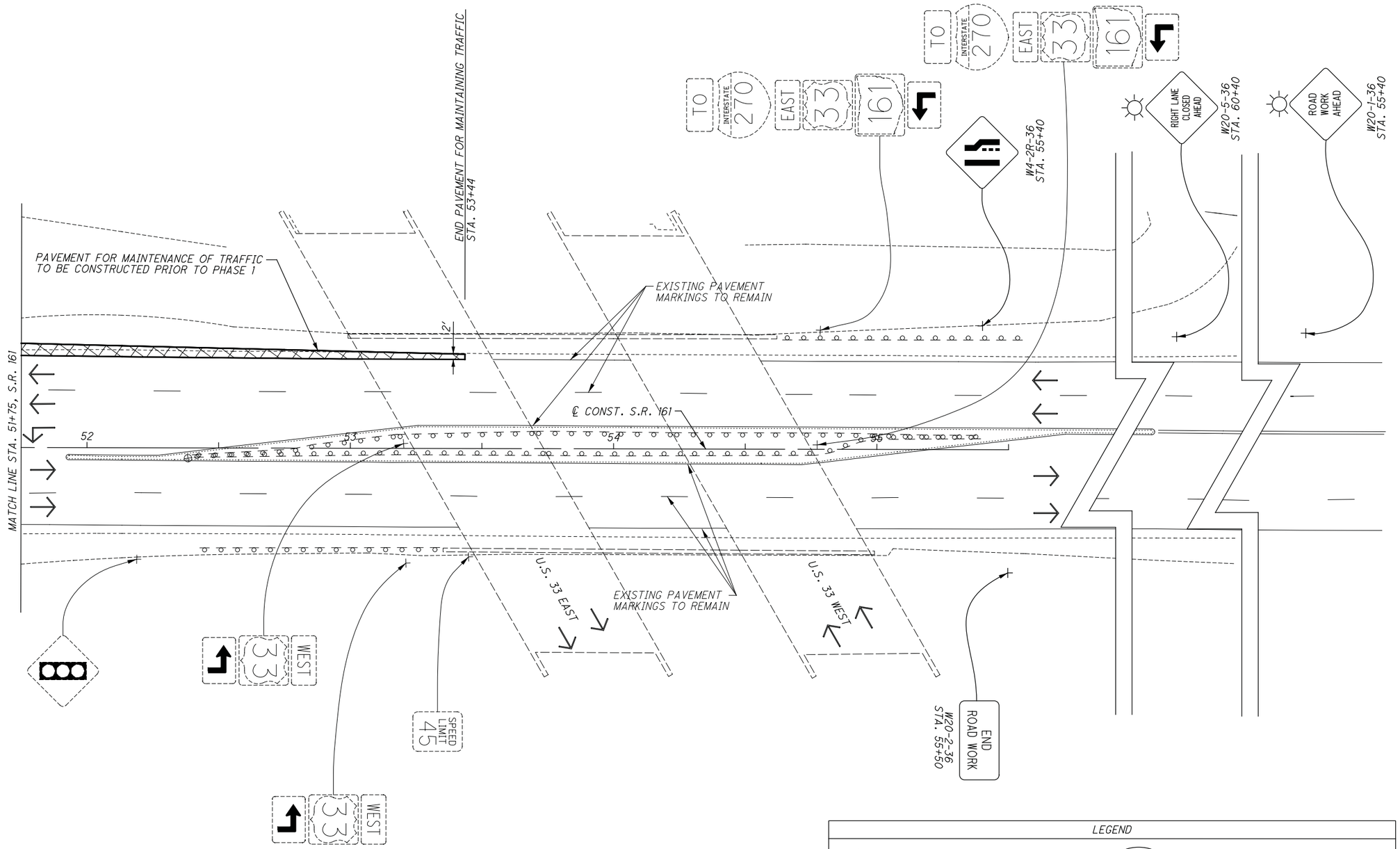

LEGEND

⊥/⊻	SIGN AND TEMPORARY SUPPORT	(LA-#)	WORK ZONE ARROW
•	CONSTRUCTION DRUM SPACING TO 20' C/C UNLESS NOTED OTHERWISE	(SL-#)	WORK ZONE STOP LINE
▨	PAVEMENT FOR MAINTAINING TRAFFIC	(DY-#)	WORK ZONE CENTER LINE, DOUBLE SOLID
▱	WORK AREA	(CL-#)	WORK ZONE CHANNELIZING LINE
→	TRAFFIC FLOW ARROW	(LL-#)	WORK ZONE LANE LINE
(Y-#)	WORK ZONE EDGE LINE, YELLOW	◇	EXISTING SIGN TO REMAIN
(W-#)	WORK ZONE EDGE LINE, WHITE	◇	MAINTENANCE OF TRAFFIC SIGN

N

0 10 20 40
HORIZONTAL SCALE IN FEET

CALCULATED JWG
CHECKED RAK

MAINTENACE OF TRAFFIC PLAN - PHASE 1
STA. 51+75 TO END (S.R. 161)

S.R. 161/EITERMAN RD.
ROUNDABOUT

\\AKRN04\DATA\2013\2013945\UNI\08748\WOT\SHEETS\08748MP004.DGN
1/13/2015
4:02:41 PM
MSUMMERVILLE

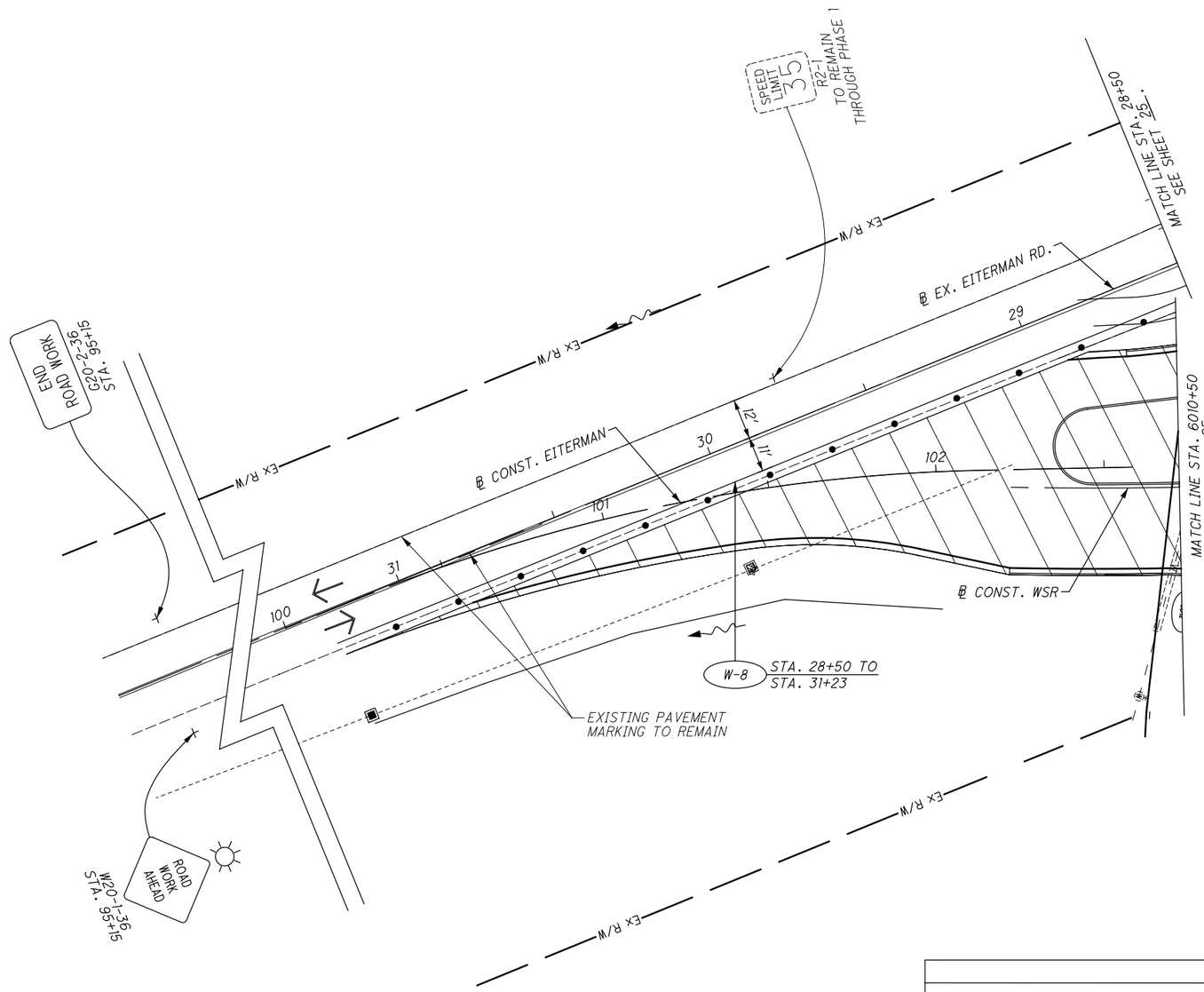

LEGEND

	SIGN AND TEMPORARY SUPPORT	LA-#	WORK ZONE ARROW
•	CONSTRUCTION DRUM SPACING TO 20' C/C UNLESS NOTED OTHERWISE	SL-#	WORK ZONE STOP LINE
	PAVEMENT FOR MAINTAINING TRAFFIC	DY-#	WORK ZONE CENTER LINE, DOUBLE SOLID
	WORK AREA	CL-#	WORK ZONE CHANNELIZING LINE
→	TRAFFIC FLOW ARROW	LL-#	WORK ZONE LANE LINE
Y-#	WORK ZONE EDGE LINE, YELLOW		EXISTING SIGN TO REMAIN
W-#	WORK ZONE EDGE LINE, WHITE		MAINTENANCE OF TRAFFIC SIGN

0 10 20 40
HORIZONTAL SCALE IN FEET

CALCULATED JWG
CHECKED RAK

TRAFFIC PLAN - PHASE 1
MAINTENANCE OF TRAFFIC
BEGIN TO STA. 6010+50 (EITERMAN RD.)

S.R. 161/EITERMAN RD.
ROUNDABOUT

\\AKRNO4\DATA\2013\2013945\UNI\80748\MOT\SHEETS\80748MP005.DGN
1/13/2015
4:03:36 PM
MSUMMERVILLE

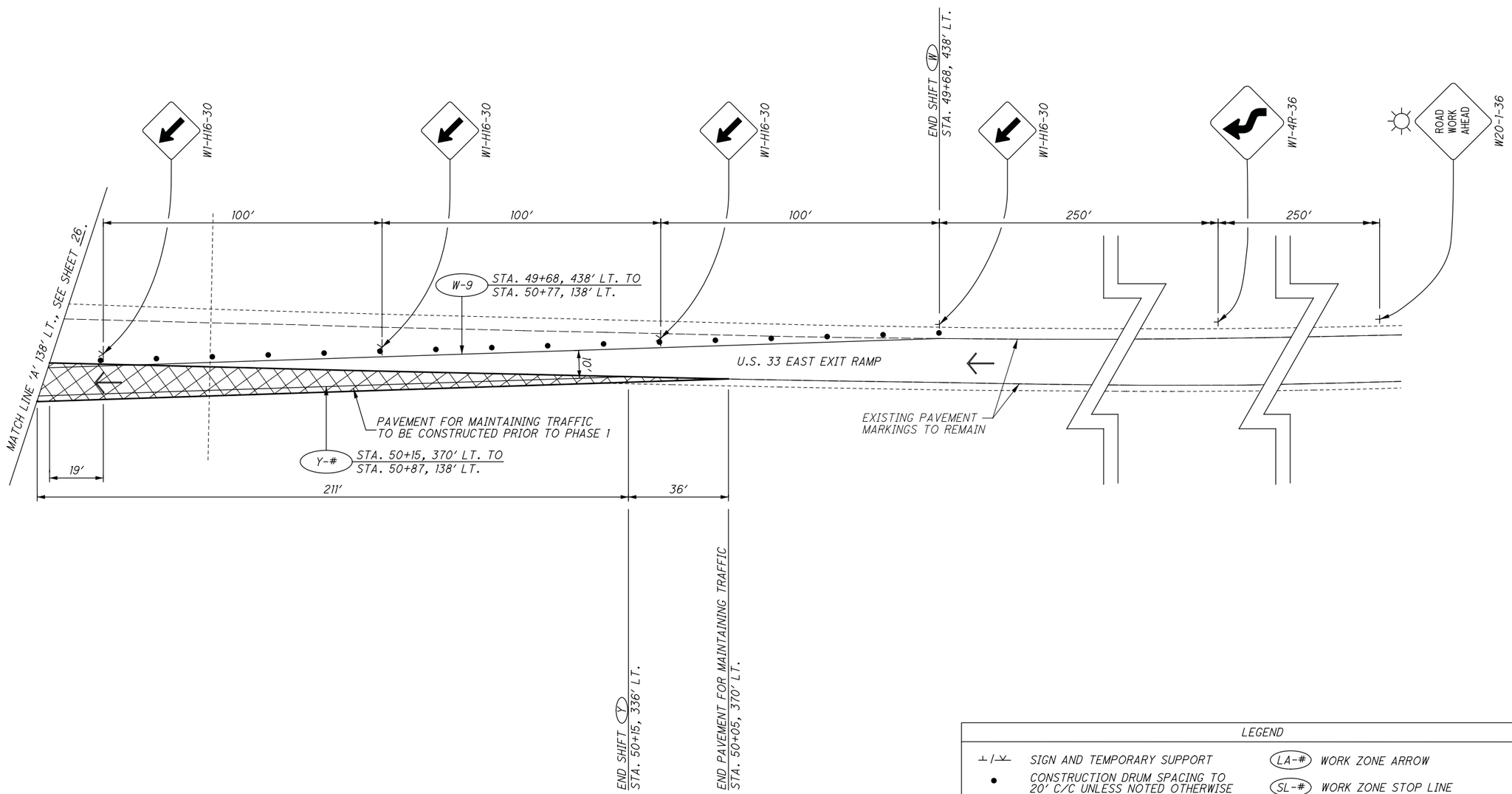

LEGEND			
⊥/⊻	SIGN AND TEMPORARY SUPPORT	LA-#	WORK ZONE ARROW
•	CONSTRUCTION DRUM SPACING TO 20' C/C UNLESS NOTED OTHERWISE	SL-#	WORK ZONE STOP LINE
	PAVEMENT FOR MAINTAINING TRAFFIC	DY-#	WORK ZONE CENTER LINE, DOUBLE SOLID
	WORK AREA	CL-#	WORK ZONE CHANNELIZING LINE
→	TRAFFIC FLOW ARROW	LL-#	WORK ZONE LANE LINE
Y-#	WORK ZONE EDGE LINE, YELLOW		EXISTING SIGN TO REMAIN
W-#	WORK ZONE EDGE LINE, WHITE		MAINTENANCE OF TRAFFIC SIGN

HORIZONTAL SCALE IN FEET
0 10 20 40

CALCULATED JWG
CHECKED RAK

MAINTENANCE OF TRAFFIC PLAN - PHASE 1
U.S. 33 EAST EXIT RAMP

S.R. 161/ EITERMAN RD.
ROUNDABOUT

\\KRNB4\DATA\2013\2013945\UNIT\80748\MOT\SHEETS\80748MP006.DGN
1/13/2015
4:05:00 PM
MSUMMERVILLE

LEGEND	
SIGN AND TEMPORARY SUPPORT	(LA-#) WORK ZONE ARROW
CONSTRUCTION DRUM SPACING TO 20' C/C UNLESS NOTED OTHERWISE	(SL-#) WORK ZONE STOP LINE
PAVEMENT FOR MAINTAINING TRAFFIC	(DY-#) WORK ZONE CENTER LINE, DOUBLE SOLID
WORK AREA	(CL-#) WORK ZONE CHANNELIZING LINE
TRAFFIC FLOW ARROW	(LL-#) WORK ZONE LANE LINE
(Y-#) WORK ZONE EDGE LINE, YELLOW	EXISTING SIGN TO REMAIN
(W-#) WORK ZONE EDGE LINE, WHITE	MAINTENANCE OF TRAFFIC SIGN

NOTES: 1. FOR DETOUR PLAN (EITERMAN ROAD) SEE SHEET 30.

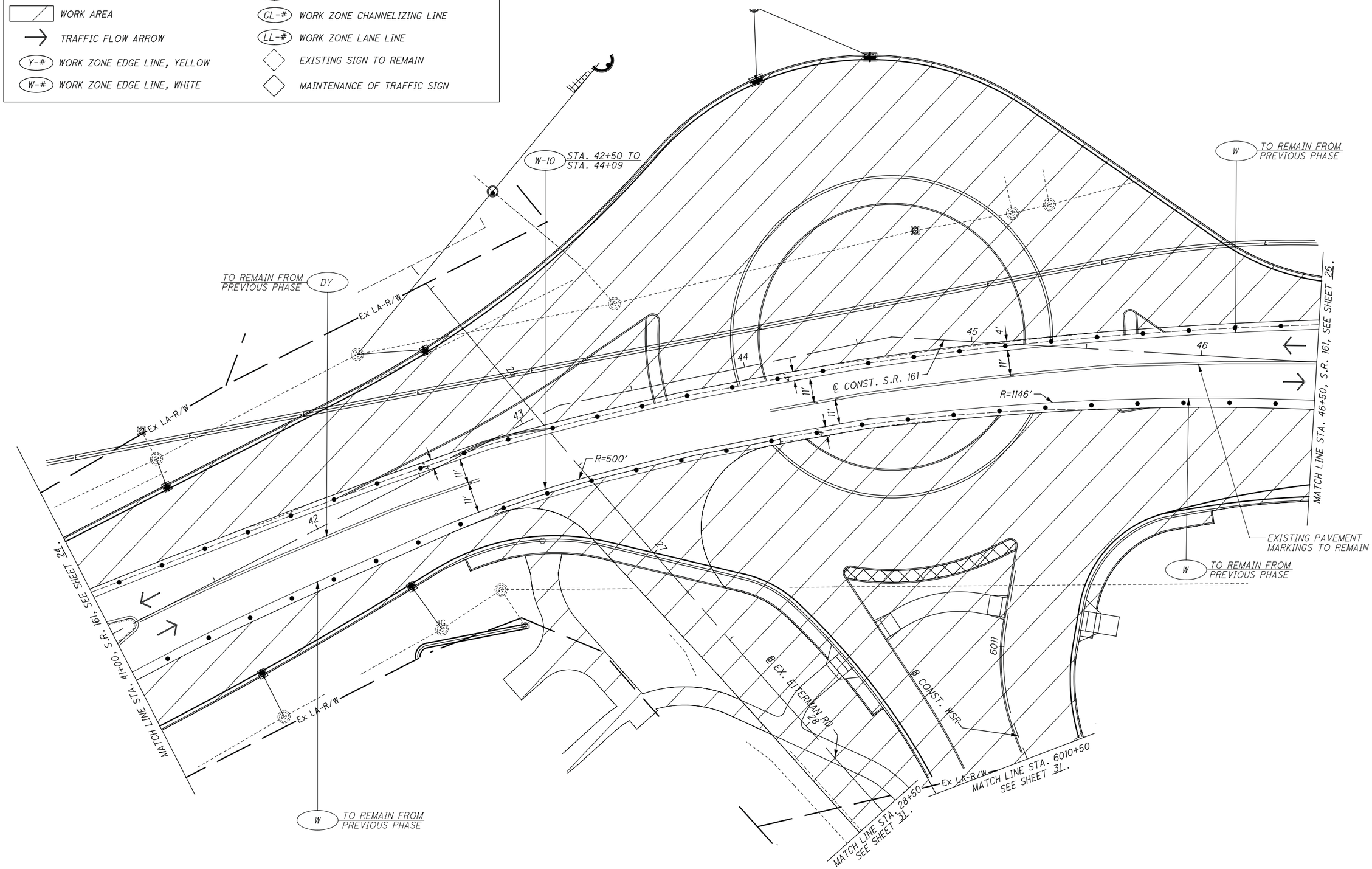

HORIZONTAL SCALE IN FEET 0 10 20 40

CALCULATED JWG
CHECKED RAK

MAINTENACE OF TRAFFIC PLAN - PHASE 1A
STA. 41+00 TO STA. 46+50 (S.R. 161)

S.R. 161/EITERMAN RD. ROUNDABOUT

\\WKRN04\DATA\2013\2013945\UNIT\80748\MOT\SHEETS\80748MP007.DGN
2/3/2015
9:17:00 AM
JGRIMM

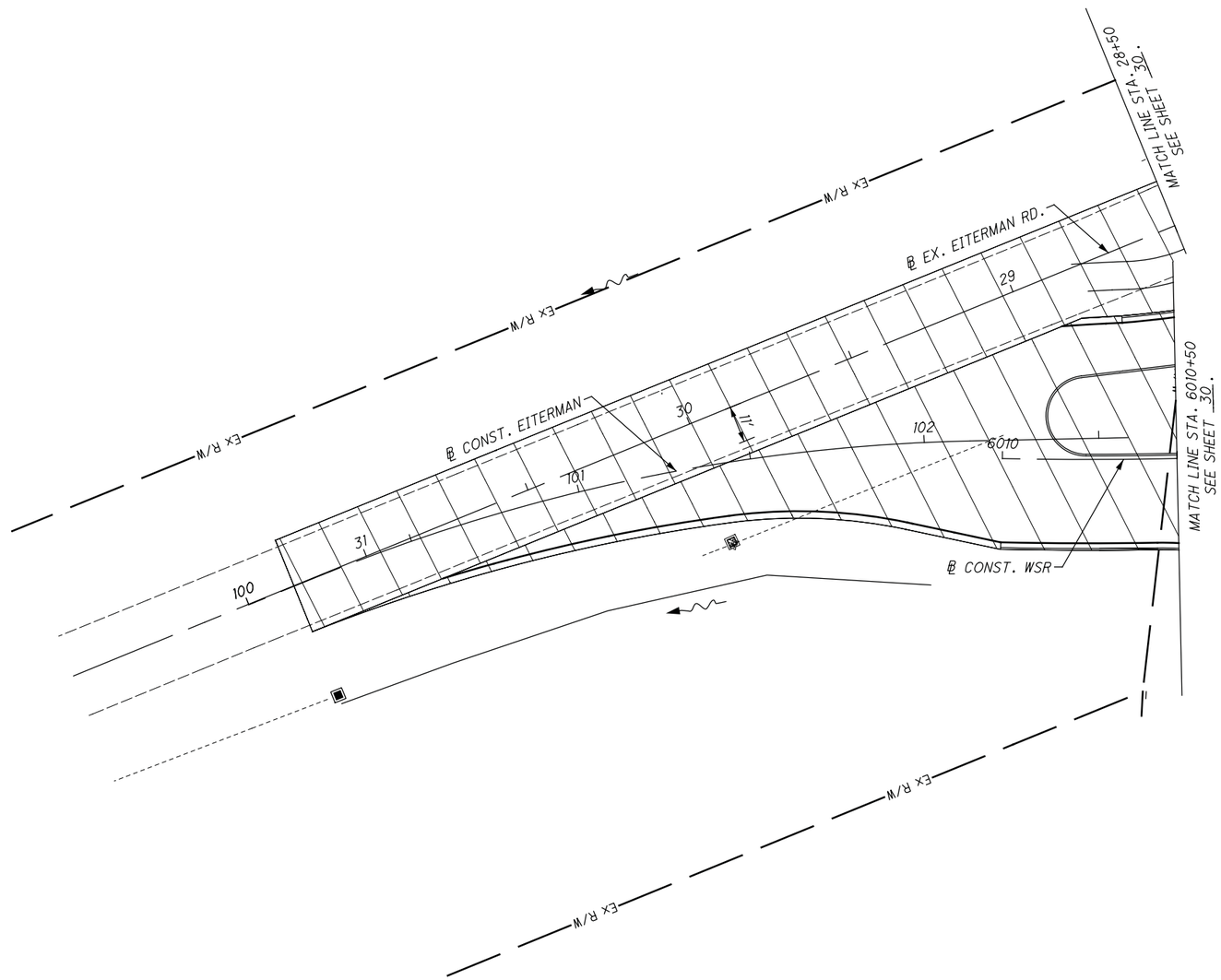

NOTES: 1. FOR DETOUR PLAN (EITERMAN ROAD) SEE SHEET 22.

LEGEND

SIGN AND TEMPORARY SUPPORT	LA-# WORK ZONE ARROW
CONSTRUCTION DRUM SPACING TO 20' C/C UNLESS NOTED OTHERWISE	SL-# WORK ZONE STOP LINE
PAVEMENT FOR MAINTAINING TRAFFIC	DY-# WORK ZONE CENTER LINE, DOUBLE SOLID
WORK AREA	CL-# WORK ZONE CHANNELIZING LINE
TRAFFIC FLOW ARROW	LL-# WORK ZONE LANE LINE
Y-# WORK ZONE EDGE LINE, YELLOW	EXISTING SIGN TO REMAIN
W-# WORK ZONE EDGE LINE, WHITE	MAINTENANCE OF TRAFFIC SIGN

0 10 20 40
HORIZONTAL SCALE IN FEET

CALCULATED JWG
CHECKED RAK

MAINTENANCE OF TRAFFIC PLAN - PHASE 1A
BEGIN TO STA. 6010+50 (EITERMAN RD.)

S.R. 161/ EITERMAN RD.
ROUNDABOUT

\\WRNR\DATA\2013\2013945\INT\80748\MOT\SHEETS\80748MP008.DGN
1/13/2015
4:06:58 PM
MSUMMERVILLE

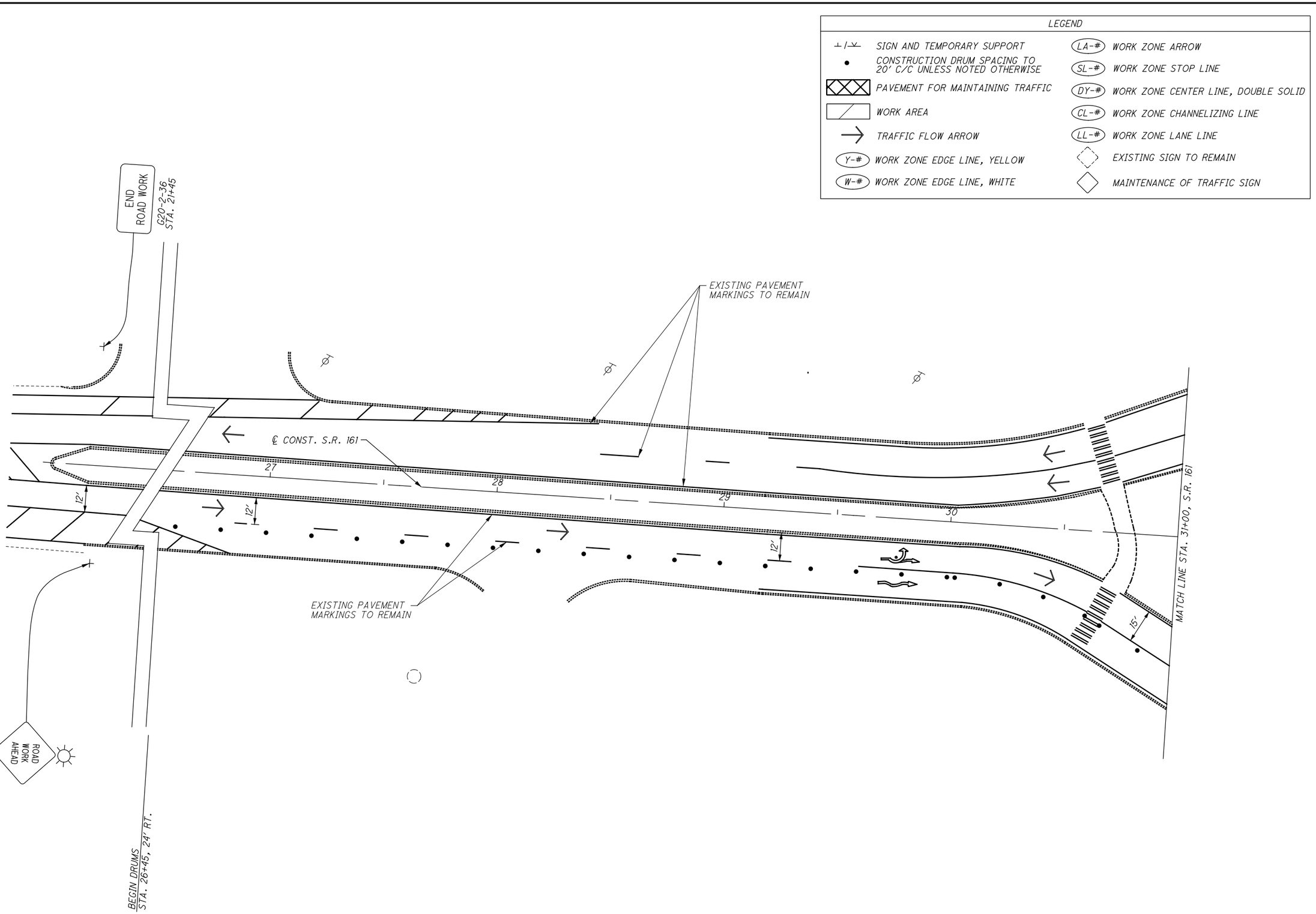

HORIZONTAL SCALE IN FEET
0 10 20 40

CALCULATED JWG
CHECKED RAK

MAINTENANCE OF TRAFFIC PLAN - PHASE 2
BEGIN TO STA. 31+00 (S.R. 161)

S.R. 161/ EITERMAN RD. ROUNDABOUT

\\AKRN04\DATA\2013\2013945\UNI\80748\MOT\SHEETS\80748MP011.DGN
1/14/2015
9:31:16 AM
JGRIMM

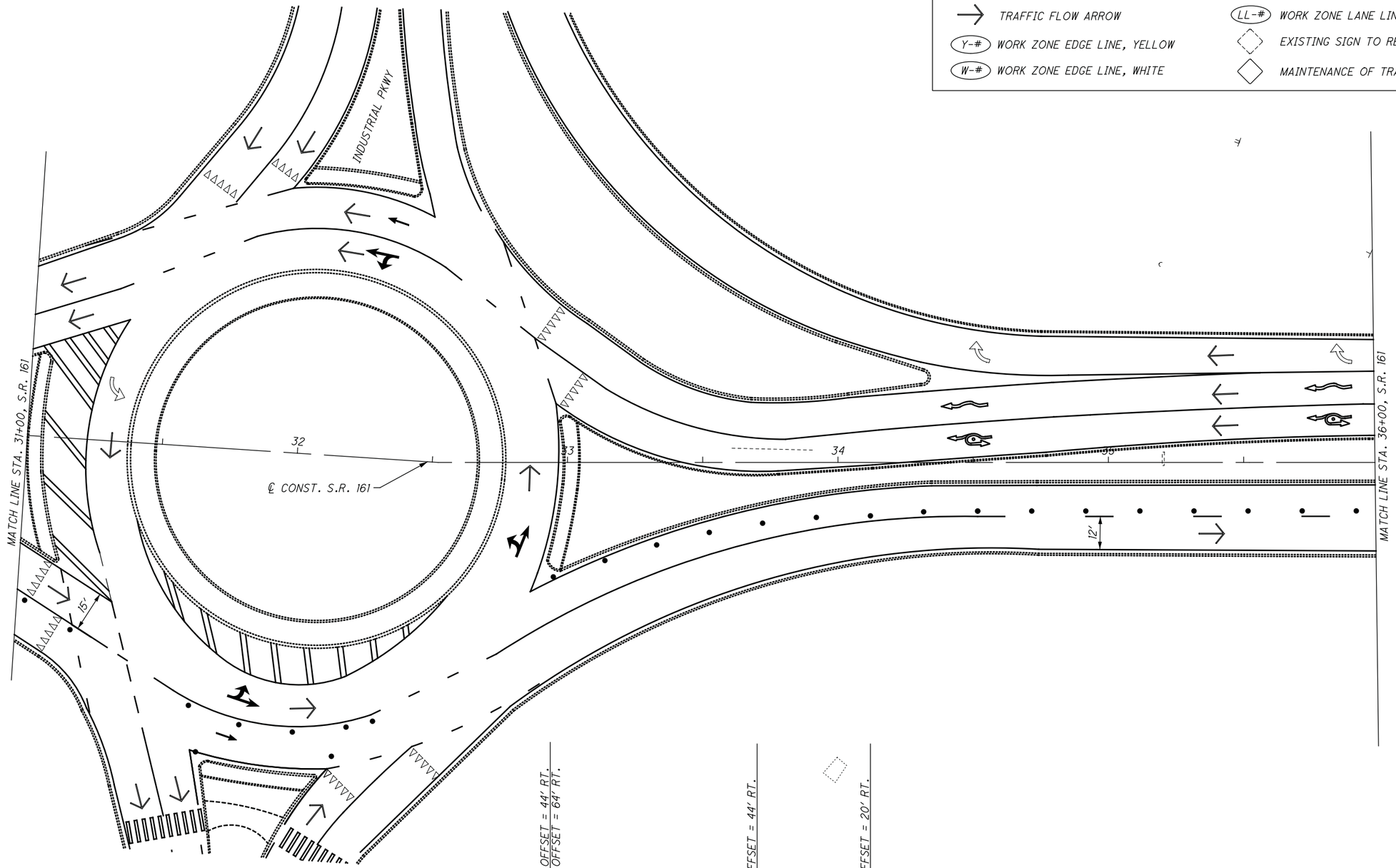

LEGEND

SIGN AND TEMPORARY SUPPORT	LA-# WORK ZONE ARROW
CONSTRUCTION DRUM SPACING TO 20' C/C UNLESS NOTED OTHERWISE	SL-# WORK ZONE STOP LINE
PAVEMENT FOR MAINTAINING TRAFFIC	DY-# WORK ZONE CENTER LINE, DOUBLE SOLID
WORK AREA	CL-# WORK ZONE CHANNELIZING LINE
TRAFFIC FLOW ARROW	LL-# WORK ZONE LANE LINE
Y-# WORK ZONE EDGE LINE, YELLOW	EXISTING SIGN TO REMAIN
W-# WORK ZONE EDGE LINE, WHITE	MAINTENANCE OF TRAFFIC SIGN

N

0 10 20 40
HORIZONTAL SCALE IN FEET

CALCULATED JWG
CHECKED RAK

MAINTENANCE OF TRAFFIC PLAN - PHASE 2
STA. 36+00 TO STA. 31+00 (S.R. 161)

S.R. 161/ EITERMAN RD. ROUNDABOUT

\\WRNB9A\DATA\2813\2813945\UNI\80748\MOT\SHEETS\80748MP012.DGN
1/14/2015
9:32:03 AM
JGR1MM

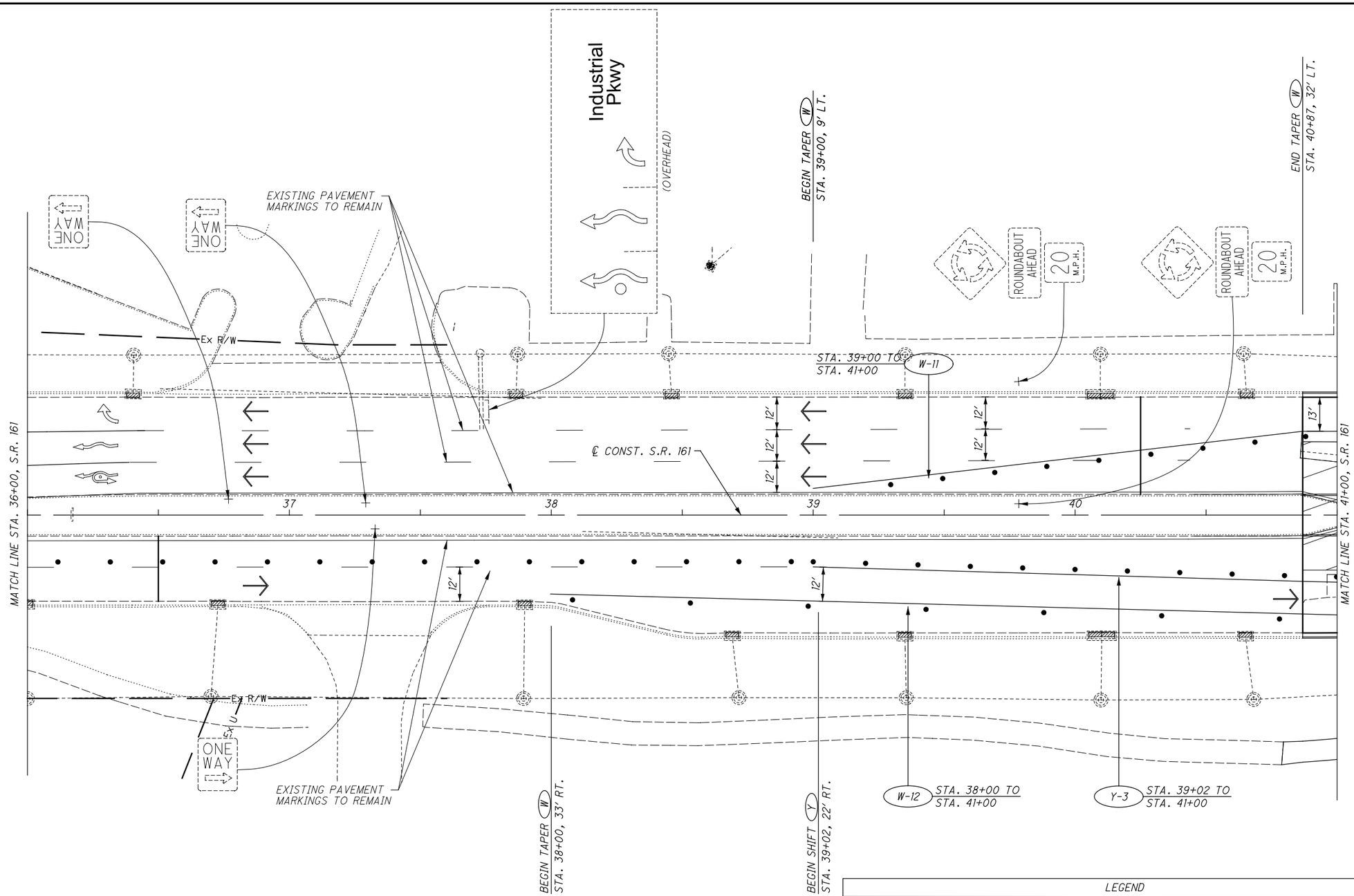

LEGEND

⊥/⊥	SIGN AND TEMPORARY SUPPORT	LA-#	WORK ZONE ARROW
•	CONSTRUCTION DRUM SPACING TO 20' C/C UNLESS NOTED OTHERWISE	SL-#	WORK ZONE STOP LINE
	PAVEMENT FOR MAINTAINING TRAFFIC	DY-#	WORK ZONE CENTER LINE, DOUBLE SOLID
	WORK AREA	CL-#	WORK ZONE CHANNELIZING LINE
→	TRAFFIC FLOW ARROW	LL-#	WORK ZONE LANE LINE
Y-#	WORK ZONE EDGE LINE, YELLOW		EXISTING SIGN TO REMAIN
W-#	WORK ZONE EDGE LINE, WHITE		MAINTENANCE OF TRAFFIC SIGN

N

0 10 20 40
HORIZONTAL SCALE IN FEET

CALCULATED JWG
CHECKED RAK

MAINTENANCE OF TRAFFIC PLAN - PHASE 2
STA. 36+00 TO STA. 41+00 (S.R. 161)

S.R. 161/EITERMAN RD. ROUNDABOUT

\\AKRN04\DATA\2013\2013945\UNI\80748\WOT\SHEETS\80748MP013.DGN
1/13/2015
4:09:34 PM
MSUMMERVILLE

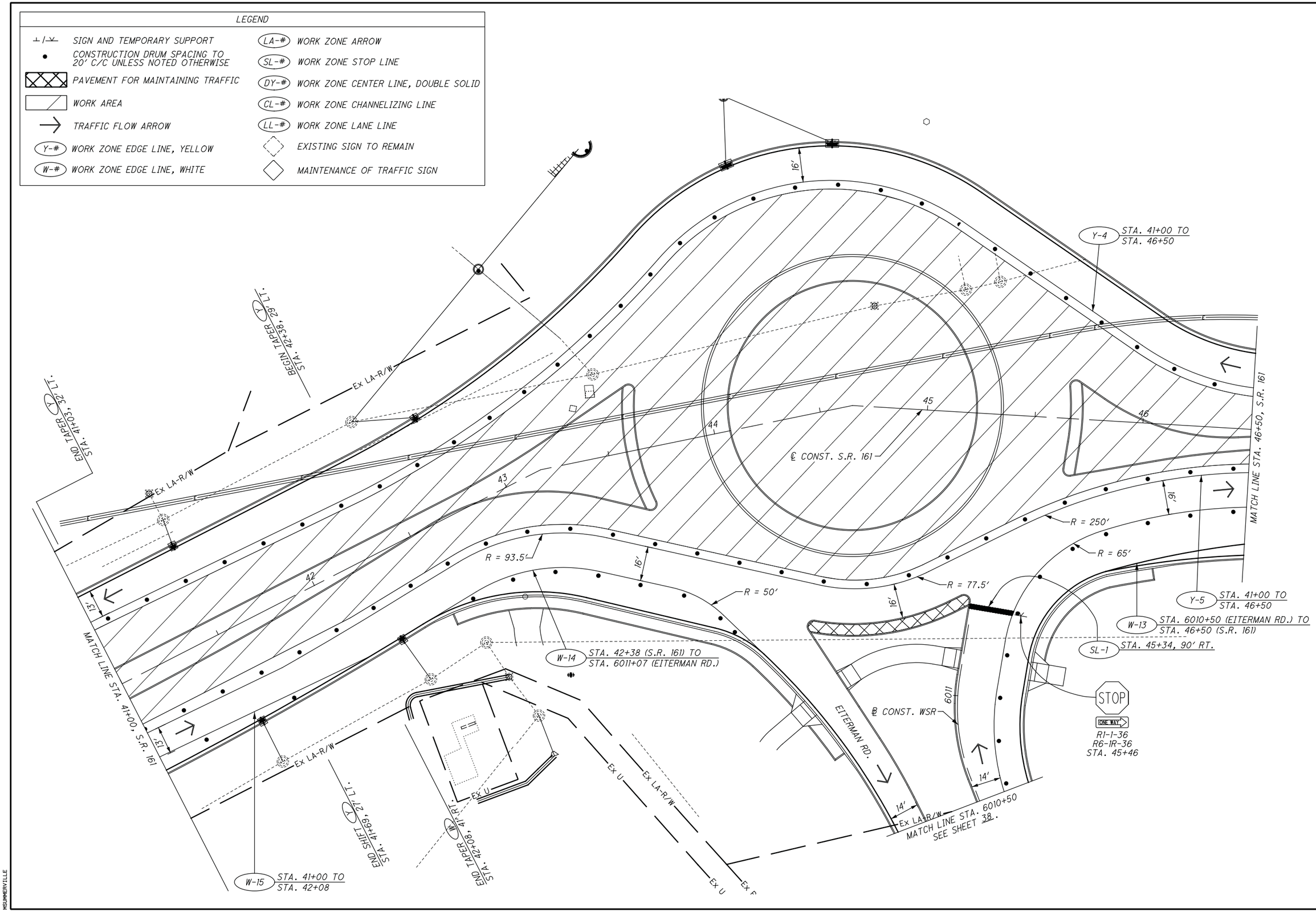

HORIZONTAL SCALE IN FEET
0 10 20 40

CALCULATED JWG
CHECKED RAK

MAINTENANCE OF TRAFFIC PLAN - PHASE 2
STA. 46+50 (S.R. 161)
STA. 41+00 TO

S.R. 161/ EITERMAN RD. ROUNDABOUT

\\WRN01\DATA\2813\2813945\UNIT\80748\MOT\SHEETS\80748MP014.DGN
1/13/2015
4:28:27 PM
MSUMMERVILLE

LEGEND	
SIGN AND TEMPORARY SUPPORT	(LA-#) WORK ZONE ARROW
CONSTRUCTION DRUM SPACING TO 20' C/C UNLESS NOTED OTHERWISE	(SL-#) WORK ZONE STOP LINE
PAVEMENT FOR MAINTAINING TRAFFIC	(DY-#) WORK ZONE CENTER LINE, DOUBLE SOLID
WORK AREA	(CL-#) WORK ZONE CHANNELIZING LINE
TRAFFIC FLOW ARROW	(LL-#) WORK ZONE LANE LINE
(Y-#) WORK ZONE EDGE LINE, YELLOW	EXISTING SIGN TO REMAIN
(W-#) WORK ZONE EDGE LINE, WHITE	MAINTENANCE OF TRAFFIC SIGN

NOTES: 1. THE FOR DETOUR PLAN (SB U.S. 33 TO EB S.R. 161) SEE SHEET 23.

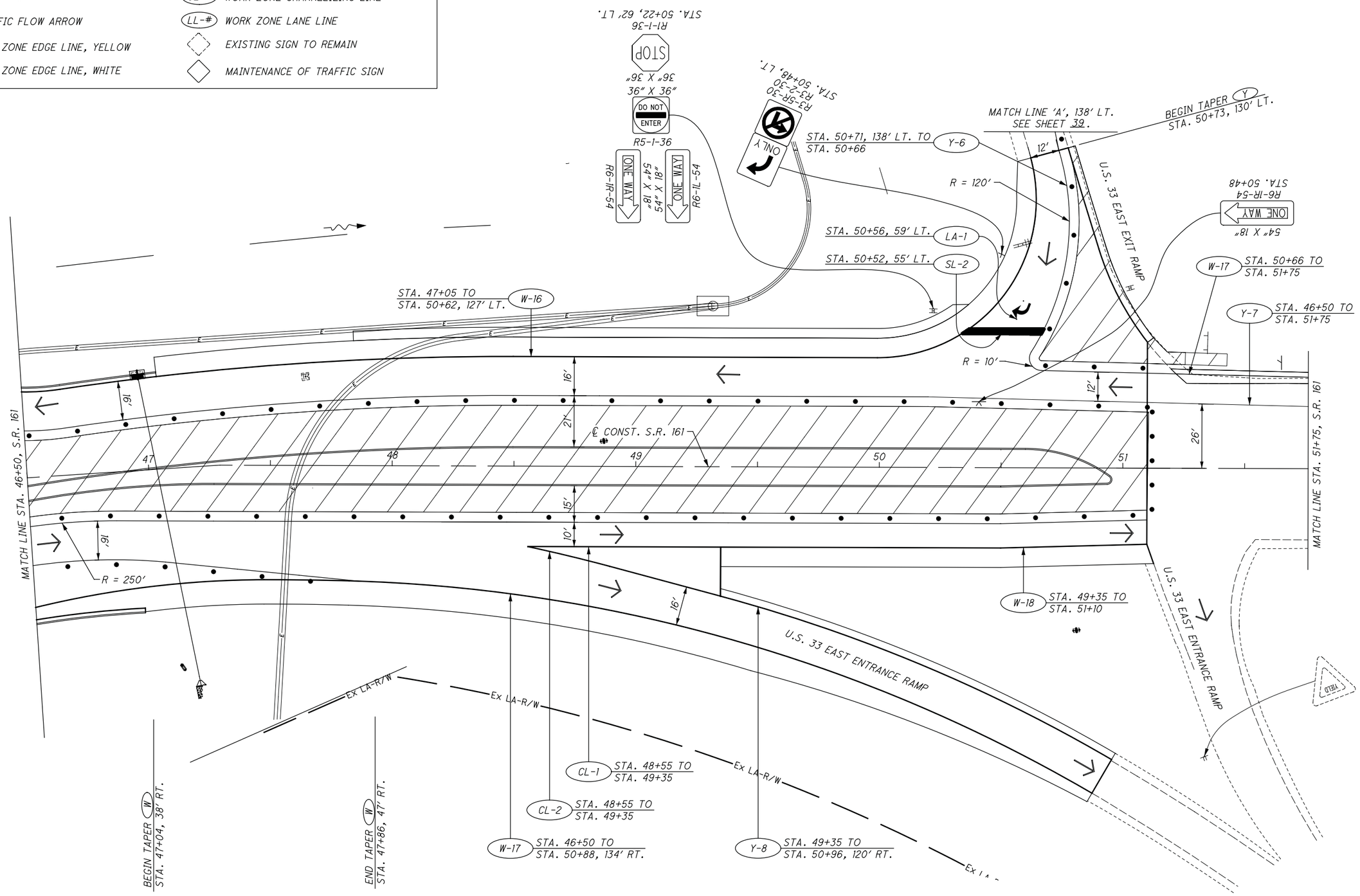

HORIZONTAL SCALE IN FEET 0 10 20 40

CALCULATED JWG
CHECKED RAK

MAINTENANCE OF TRAFFIC PLAN - PHASE 2
STA. 46+50 TO STA. 51+75 (S.R. 161)

S.R. 161/ EITERMAN RD. ROUNDABOUT

\\KRNA\DATA\2013\2013945\UNI\80748\MOT\SHEETS\80748MP015.DGN
1/13/2015
4:11:00 PM
MSUMMERVILLE

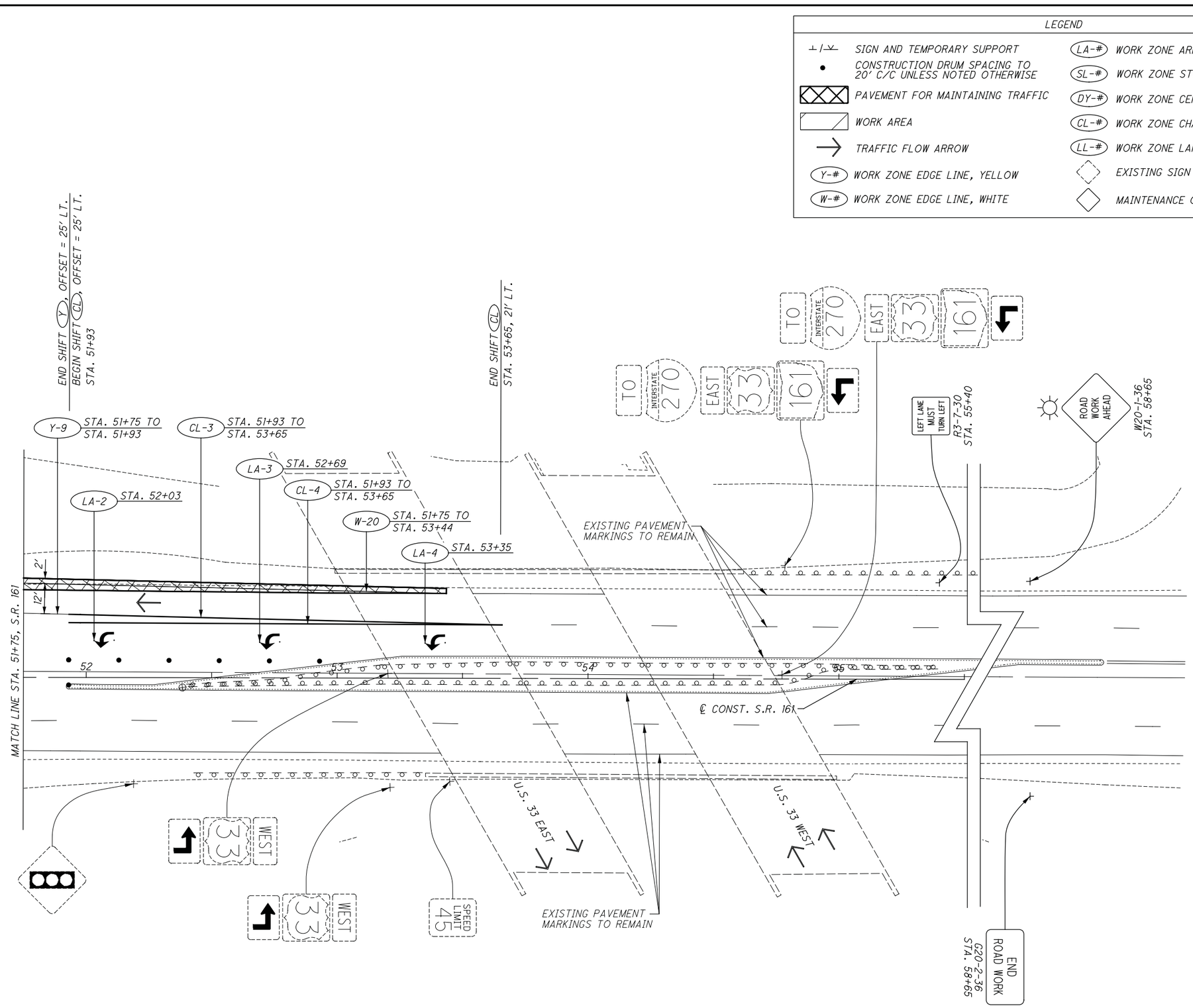

HORIZONTAL SCALE IN FEET
0 10 20 40

CALCULATED JWG
CHECKED RAK

MAINTENANCE OF TRAFFIC PLAN - PHASE 2
STA. 51+75 TO END (S.R. 161)

S.R. 161/EITERMAN RD. ROUNDABOUT

\\KRNA\DATA\2013\2013945\UNI\80748\MOT\SHEETS\80748MP016.DGN
1/13/2015
4:29:28 PM
MSUMMERVILLE

LEGEND	
SIGN AND TEMPORARY SUPPORT	(LA-#) WORK ZONE ARROW
CONSTRUCTION DRUM SPACING TO 20' C/C UNLESS NOTED OTHERWISE	(SL-#) WORK ZONE STOP LINE
PAVEMENT FOR MAINTAINING TRAFFIC	(DY-#) WORK ZONE CENTER LINE, DOUBLE SOLID
WORK AREA	(CL-#) WORK ZONE CHANNELIZING LINE
TRAFFIC FLOW ARROW	(LL-#) WORK ZONE LANE LINE
(Y-#) WORK ZONE EDGE LINE, YELLOW	EXISTING SIGN TO REMAIN
(W-#) WORK ZONE EDGE LINE, WHITE	MAINTENANCE OF TRAFFIC SIGN

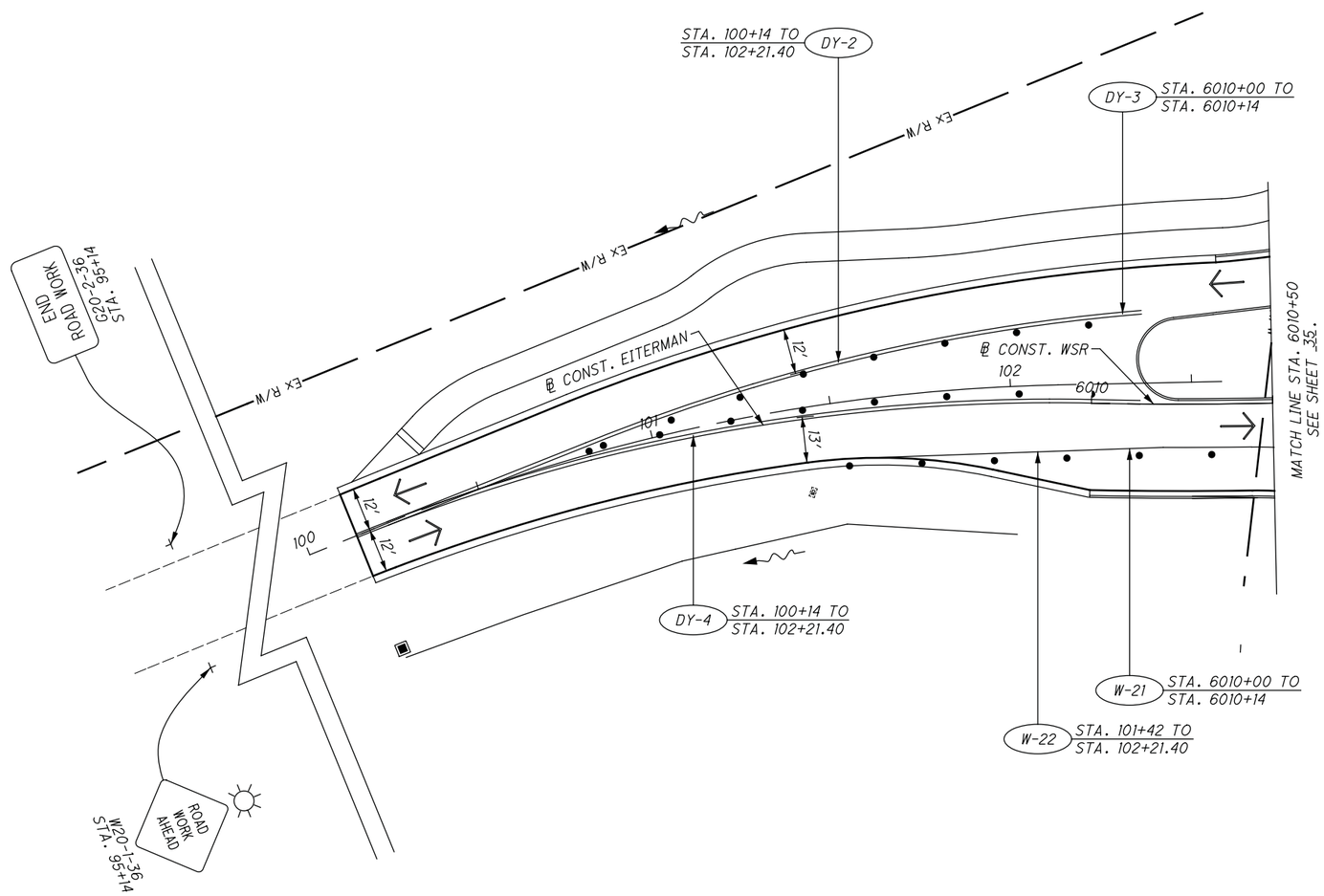

HORIZONTAL SCALE IN FEET
0 10 20 40

CALCULATED JWG
CHECKED RAK

MAINTENANCE OF TRAFFIC PLAN - PHASE 2
BEGIN TO STA. 6010+50 (EITERMAN RD.)

S.R. 161/ EITERMAN RD.
ROUNDABOUT

\\WKRNGA\DATA\2013\2013945\UNIT\80748\MOT\SHEETS\80748MP017.DGN
1/13/2015
4:12:36 PM
MSUMMERVILLE

LEGEND	
SIGN AND TEMPORARY SUPPORT	(LA-#) WORK ZONE ARROW
CONSTRUCTION DRUM SPACING TO 20' C/C UNLESS NOTED OTHERWISE	(SL-#) WORK ZONE STOP LINE
PAVEMENT FOR MAINTAINING TRAFFIC	(DY-#) WORK ZONE CENTER LINE, DOUBLE SOLID
WORK AREA	(CL-#) WORK ZONE CHANNELIZING LINE
TRAFFIC FLOW ARROW	(LL-#) WORK ZONE LANE LINE
(Y-#) WORK ZONE EDGE LINE, YELLOW	EXISTING SIGN TO REMAIN
(W-#) WORK ZONE EDGE LINE, WHITE	MAINTENANCE OF TRAFFIC SIGN

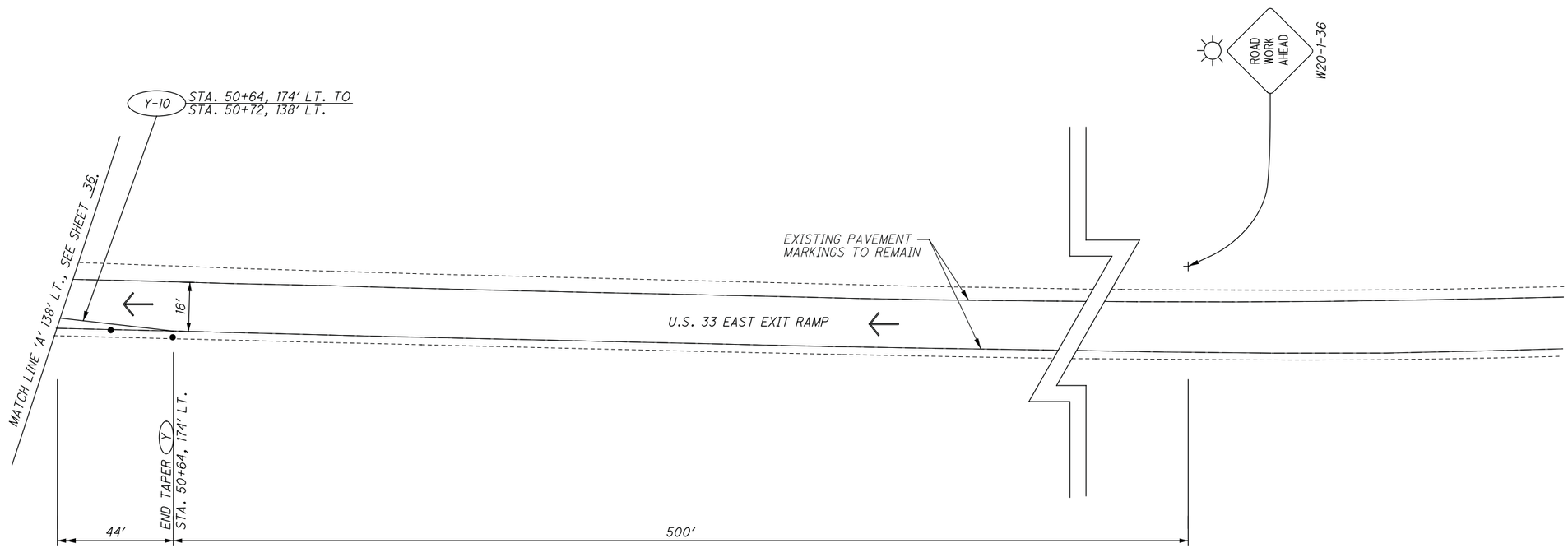

SHEET 40 NOT USED.

HORIZONTAL SCALE IN FEET 0 10 20 40

CALCULATED JWG
CHECKED RAK

MAINTENANCE OF TRAFFIC PLAN - PHASE 2
U.S. 33 EAST EXIT RAMP

S.R. 161/EITERMAN RD.
ROUNDABOUT

\\AKRN04\DATA\2013\2013945\INT\80746\MOT\SHEETS\80746MP018.DGN
2/3/2015
9:18:10 AM
JARIMM

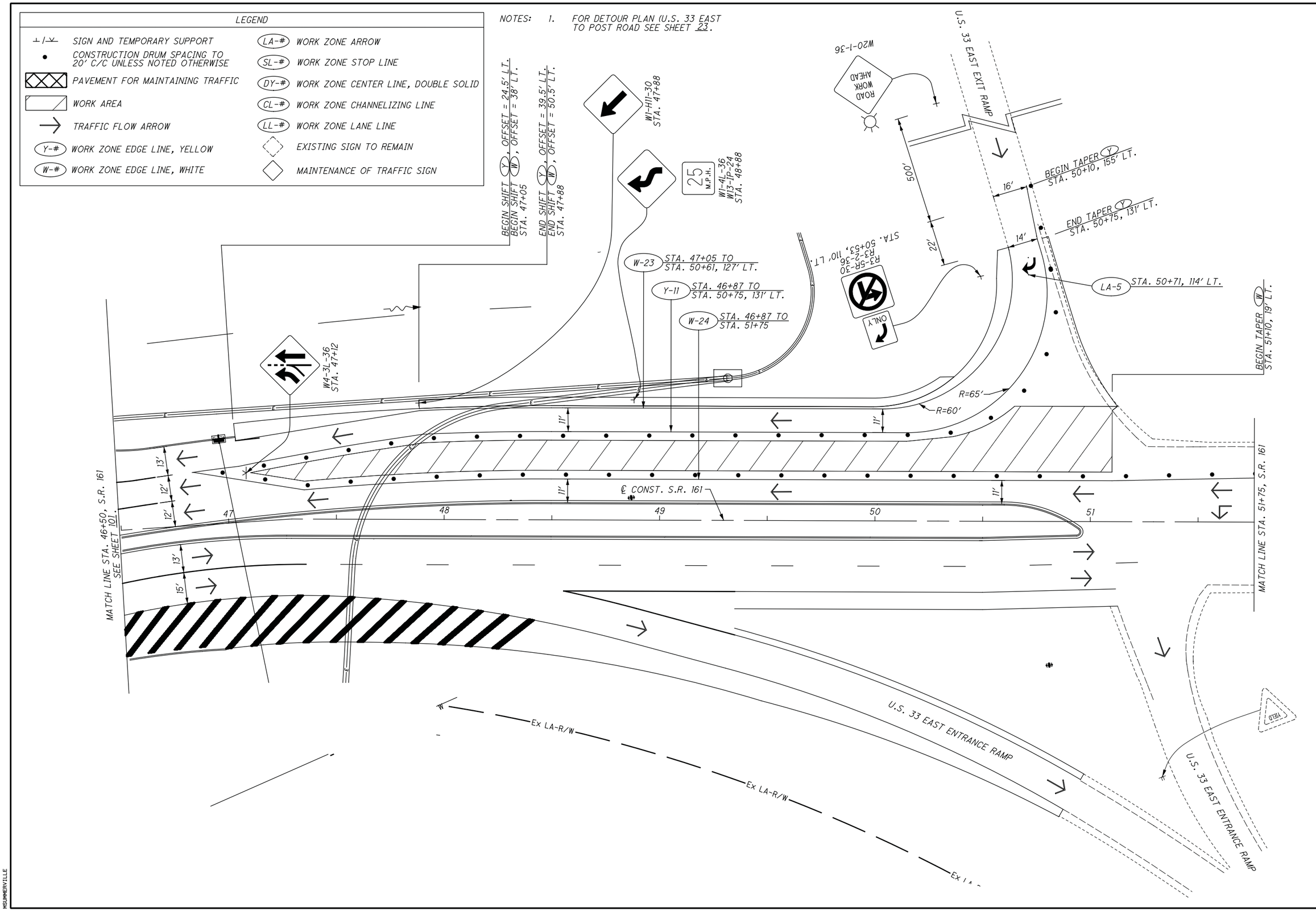

\\AKRN04\DATA\2013\2013945\UNI\88748\WOT\SHEETS\88748MP021.DGN
1/13/2015
4:14:59 PM
MSUMMERVILLE

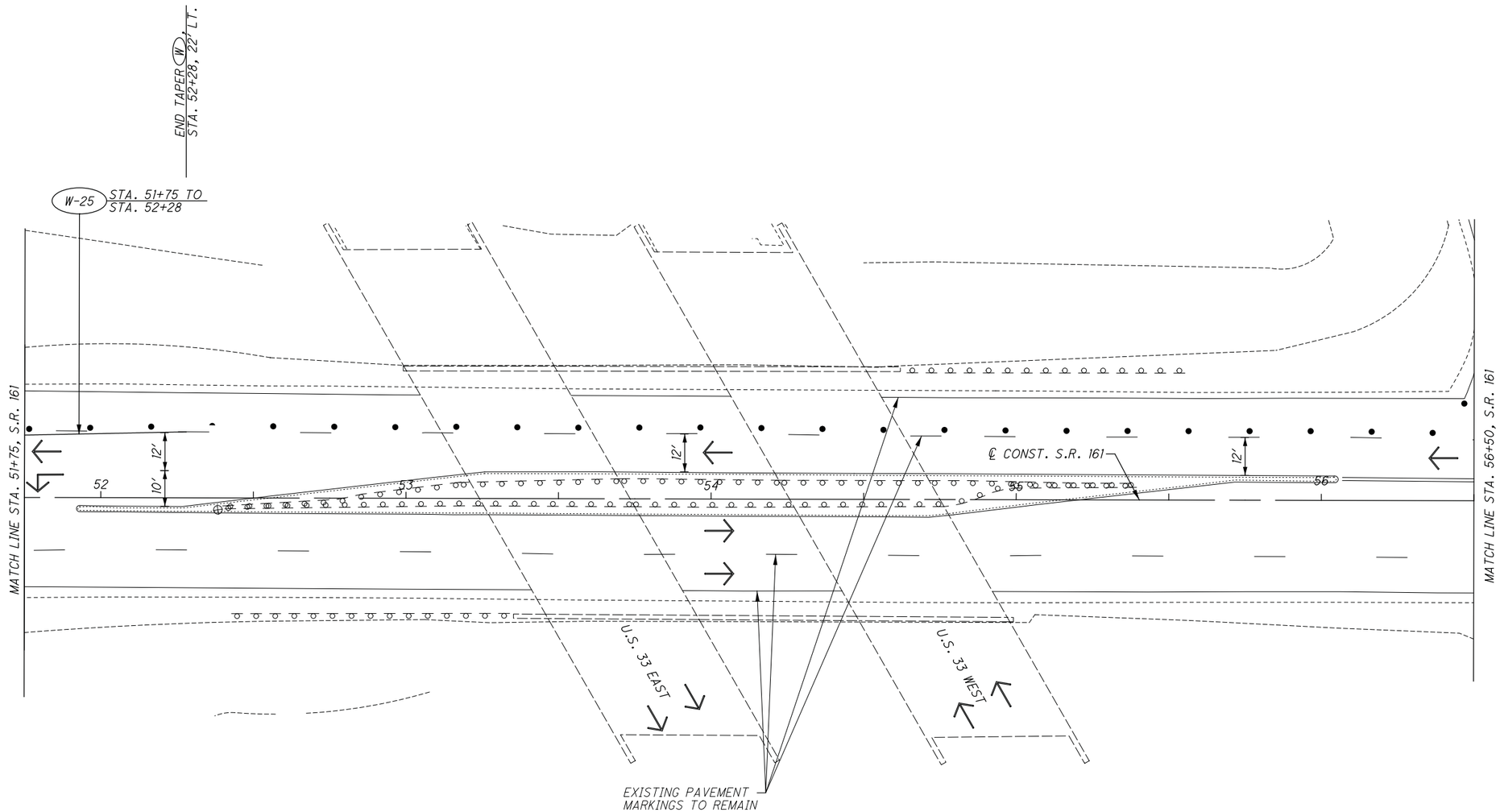

LEGEND			
⊥/⊻	SIGN AND TEMPORARY SUPPORT	(LA-#)	WORK ZONE ARROW
•	CONSTRUCTION DRUM SPACING TO 20' C/C UNLESS NOTED OTHERWISE	(SL-#)	WORK ZONE STOP LINE
	PAVEMENT FOR MAINTAINING TRAFFIC	(DY-#)	WORK ZONE CENTER LINE, DOUBLE SOLID
	WORK AREA	(CL-#)	WORK ZONE CHANNELIZING LINE
→	TRAFFIC FLOW ARROW	(LL-#)	WORK ZONE LANE LINE
(Y-#)	WORK ZONE EDGE LINE, YELLOW	◇	EXISTING SIGN TO REMAIN
(W-#)	WORK ZONE EDGE LINE, WHITE	◇	MAINTENANCE OF TRAFFIC SIGN

0 10 20 40
HORIZONTAL SCALE IN FEET

CALCULATED JWG
CHECKED RAK

MAINTENANCE OF TRAFFIC PLAN - PHASE 3
STA. 56+50 (S.R. 161)

S.R. 161/ EITERMAN RD. ROUNDABOUT

\\WRNB\DATA\2813\2813945\UNI\80748\MOT\SHEETS\80748MP822.DGN
1/13/2015
4:16:11 PM
MSUMMERVILLE

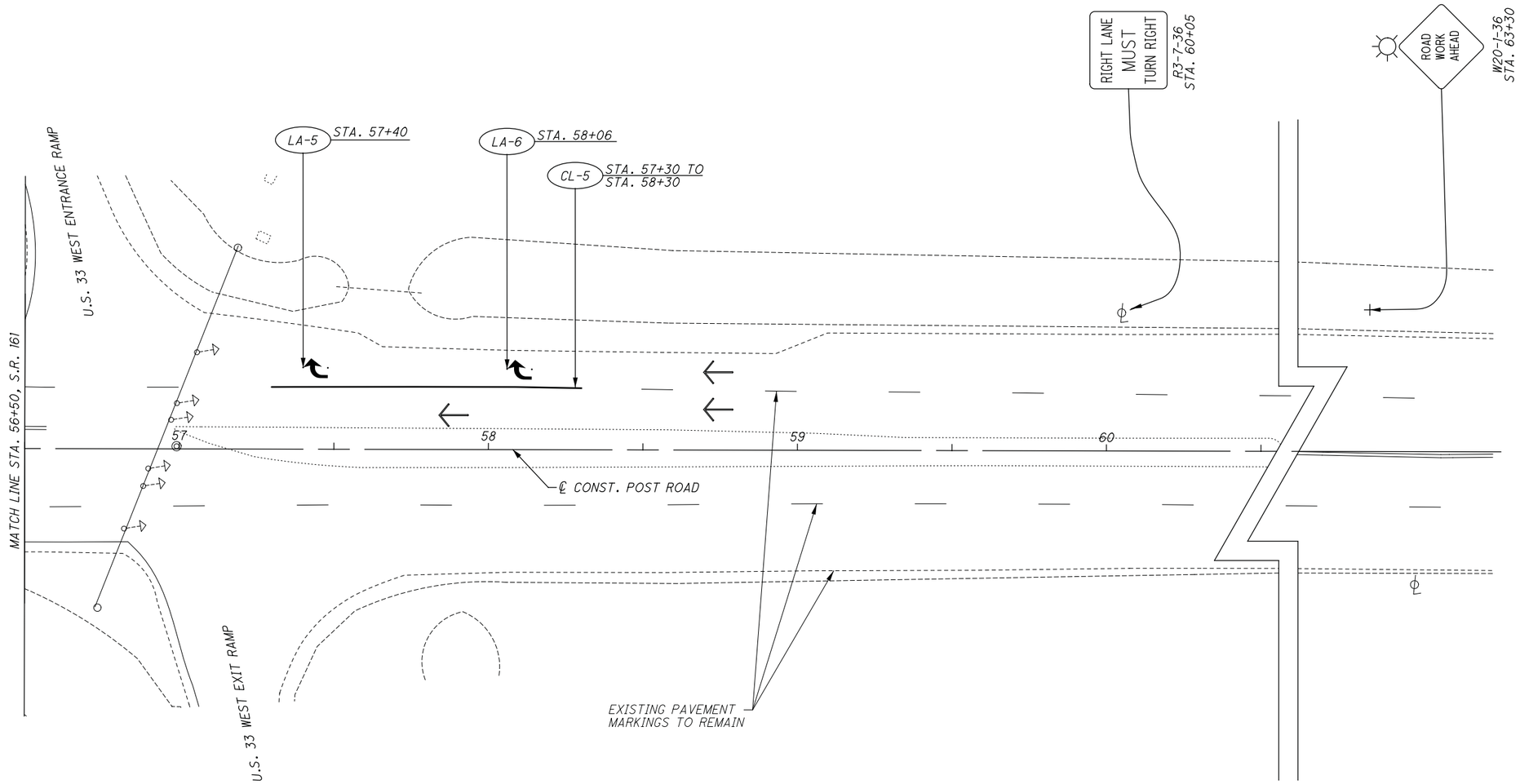

LEGEND			
⊥ / ⊻	SIGN AND TEMPORARY SUPPORT	(LA-#)	WORK ZONE ARROW
•	CONSTRUCTION DRUM SPACING TO 20' C/C UNLESS NOTED OTHERWISE	(SL-#)	WORK ZONE STOP LINE
	PAVEMENT FOR MAINTAINING TRAFFIC	(DY-#)	WORK ZONE CENTER LINE, DOUBLE SOLID
	WORK AREA	(CL-#)	WORK ZONE CHANNELIZING LINE
→	TRAFFIC FLOW ARROW	(LL-#)	WORK ZONE LANE LINE
(Y-#)	WORK ZONE EDGE LINE, YELLOW	◇	EXISTING SIGN TO REMAIN
(W-#)	WORK ZONE EDGE LINE, WHITE	◇	MAINTENANCE OF TRAFFIC SIGN

0 10 20 40
HORIZONTAL SCALE IN FEET

CALCULATED JWG
CHECKED RAK

MAINTENANCE OF TRAFFIC PLAN - PHASE 3
STA. 56+50 TO END (S.R. 161)

S.R. 161/EITERMAN RD.
ROUNDABOUT

\\WKRN04\DATA\2013\2013945\UNIT\88748\MOT\SHEETS\88748MP823.DGN
1/13/2015
4:17:09 PM
MSUMMERVILLE

SHEET NUMBER														PARTICIPATION		ITEM	ITEM EXT.	GRAND TOTAL	UNIT	DESCRIPTION	SEE SHEET NO.
12	13	14	15	48	49	50	52	53	76	77	78	127	OFFICE CALCS								
																				ROADWAY	
	1															201		1	LS	CLEARING AND GRUBBING	
							1									202		1	EACH	HEADWALL REMOVED	
							39									202		39	SF	WALK REMOVED	
							505									202		505	SY	CONCRETE MEDIAN REMOVED	
							220									202		220	FT	CURB REMOVED	
							718									202		718	FT	PIPE REMOVED	
							512									202		512	FT	GUARDRAIL REMOVED	
							1									202		1	EACH	MANHOLE REMOVED	
							4									202		4	EACH	CATCH BASIN REMOVED	
							1									SPECIAL		1	EACH	DRILLED WATER WELL ABANDONED	
							900									202		900	FT	FENCE REMOVED	
							180				4472					203		4652	CY	EXCAVATION	
							180				9788					203		9968	CY	EMBANKMENT	
									725	141		341				204		1207	SY	SUBGRADE COMPACTION	
15361																206		15361	SY	LIME KILN DUST STABILIZED SUBGRADE, 16 INCHES DEEP, AS PER PLAN	14
1																206		1	LS	MIXTURE DESIGN FOR CHEMICALLY STABILIZED SOILS	
				214												607		214	FT	FENCE, TYPE 47	
				570												608		570	SF	4" CONCRETE WALK, AS PER PLAN	14
				4												608		4	EACH	CURB RAMP, AS PER PLAN	14
				5												608		5	EACH	CURB RAMP, MISC.: DETECTABLE WARNING, (8' X 2')	14
				202												608		202	SF	WALKWAY, MISC.: 10" CONCRETE WALK	14
	3															623		3	EACH	MONUMENT ASSEMBLY	
			1041													653		1041	CY	TOPSOIL FURNISHED AND PLACED, AS PER PLAN	15
																SPECIAL		1	LS	AS-BUILT CONSTRUCTION PLANS	
																				EROSION CONTROL	
								14								207*		14	EACH	INLET PROTECTION	
								2000								207*		2000	FT	PERIMETER FILTER FABRIC FENCE	
								6								SPECIAL*		6	EACH	NO. 2 STONE CHECK DAM	53
						6										601		6	SY	TIED CONCRETE BLOCK MAT, TYPE 1	
		5			7											601		12	CY	ROCK CHANNEL PROTECTION, TYPE C WITH FILTER	
											12488					659		12488	SY	SEEDING AND MULCHING, AS PER PLAN	15
			625													659		625	SY	REPAIR SEEDING AND MULCHING	
			625													659		625	SY	INTER-SEEDING	
			1.74													659		1.74	TON	COMMERCIAL FERTILIZER	
			2.58													659		2.58	ACRE	LIME	
			69													659		69	MGAL	WATER	

* CITY OF COLUMBUS CONSTRUCTION AND MATERIAL SPECIFICATIONS, 2012 EDITION. ALL OTHER ITEMS REFER TO THE ODOT CONSTRUCTION AND MATERIAL SPECIFICATIONS, 2013 EDITION.

CALCULATED LAM
CHECKED LMO

GENERAL SUMMARY

S.R. 161/ EITERMAN RD. ROUNDABOUT

\\Akrn04\Data\2013\2013945\UNI\80748\roadway\sheets\80748GG001.dgn

SHEET NUMBER												PARTICIPATION		ITEM	ITEM EXT.	GRAND TOTAL	UNIT	DESCRIPTION	SEE SHEET NO.
14	15	48	49	50	76	77	127				OFFICE CALCS								
																		DRAINAGE	
				310										605		310	FT	4" UNCLASSIFIED PIPE UNDERDRAINS, AS PER PLAN	15
				1800										605		1800	FT	4" BASE PIPE UNDERDRAINS, AS PER PLAN	15
				834										605		834	FT	6" SHALLOW PIPE UNDERDRAINS	
				1118										605		1118	FT	6" BASE PIPE UNDERDRAINS	
50				187										611		237	FT	4" CONDUIT, TYPE B	
50														611		50	FT	4" CONDUIT, TYPE C	
50														611		50	FT	4" CONDUIT, TYPE D	
50														611		50	FT	4" CONDUIT, TYPE E	
20														611		20	FT	4" CONDUIT, TYPE F	
				116										611		116	FT	4" CONDUIT, TYPE F FOR UNDERDRAIN OUTLET	
				132										611		132	FT	6" CONDUIT, TYPE F FOR UNDERDRAIN OUTLETS	
				28										611		28	FT	6" CONDUIT, TYPE B	
50														611		50	FT	8" CONDUIT, TYPE B	
50														611		50	FT	8" CONDUIT, TYPE E	
50														611		50	FT	8" CONDUIT, TYPE F	
			186											611		186	FT	12" CONDUIT, TYPE B	
			170											611		170	FT	12" CONDUIT, TYPE C	
			40											611		40	FT	24" CONDUIT, TYPE B	
			217											611		217	FT	36" CONDUIT, TYPE C	
			7											611		7	EACH	CATCH BASIN, NO. 3A, AS PER PLAN	15
			1											611		1	EACH	CATCH BASIN, NO. 2-2B	
			1											611		1	EACH	CATCH BASIN, NO. 2-3	
			1											611		1	EACH	CATCH BASIN RECONSTRUCTED TO GRADE	
			2											611		2	EACH	MANHOLE, NO. 3	
			1											611		1	EACH	MANHOLE, NO. 3 W/ 108" BASE I.D. & 12" WEIR, AS PER PLAN	15
			1											611		1	EACH	MANHOLE RECONSTRUCTED TO GRADE	
				3										611		3	EACH	PRECAST REINFORCED CONCRETE OUTLET	
	500													SPECIAL		500	LB	MISCELLANEOUS METAL	15
			3											611		3	EACH	DRAINAGE STRUCTURE, MISC.: 12" HDPE FLARED END SECTION WITH DISSIMILAR COUPLER	15
			1											611		1	EACH	DRAINAGE STRUCTURE, MISC.: 36" CONCRETE FLARED END SECTION	15
			1											895		1	EACH	MANUFACTURED WATER QUALITY STRUCTURE, TYPE 4, AS PER PLAN	15
																		PAVEMENT	
											2384			254		2384	SY	PAVEMENT PLANING, ASPHALT CONCRETE	
	12				110									301		122	TON	ASPHALT CONCRETE BASE, PG64-22	
						35								301		35	TON	ASPHALT CONCRETE BASE, PG64-22 (DRIVEWAYS)	
											6763			302		6763	TON	ASPHALT CONCRETE BASE, PG64-22	
	4				121	24					2343			304		2492	CY	AGGREGATE BASE	
											179			407		179	GAL	TACK COAT	
											537			407		537	GAL	TACK COAT FOR INTERMEDIATE COURSE	
											1318			442		1318	TON	ASPHALT CONCRETE SURFACE COURSE, 12.5MM, TYPE A (448)	
											1306			442		1306	TON	ASPHALT CONCRETE INTERMEDIATE COURSE, 19MM, TYPE A (448)	
	4													448		4	TON	ASPHALT CONCRETE INTERMEDIATE COURSE, TYPE 2, PG64-22	
	2				48									448		50	TON	ASPHALT CONCRETE SURFACE COURSE, TYPE 1, PG64-22	
						12								448		12	TON	ASPHALT CONCRETE SURFACE COURSE, TYPE 1, PG64-22 (DRIVEWAYS)	
		1072												609		1072	FT	COMBINATION CURB AND GUTTER, TYPE 2, AS PER PLAN	14
		336												609		336	FT	COMBINATION CURB AND GUTTER, TYPE 3, AS PER PLAN	10
		440												609		440	FT	CURB, TYPE 4-C, AS PER PLAN	10
		365												609		365	FT	CURB, TYPE 6	
		2115												609		2115	FT	CURB, TYPE 6, AS PER PLAN	10
		273												609		273	FT	CURB, MISC.: 12" HEIGHT	10
		177												609		177	FT	CURB, MISC.: 7.5" HEIGHT	10
							220							609		220	FT	CURB, MISC.: 14" HEIGHT	10
		5682												SPECIAL		5682	SF	MISC.: TRUCK APRON PAVEMENT	11
		882												SPECIAL		882	SF	MISC.: PAVERS	11
							2067							SPECIAL		2067	SF	MISC.: OLEN VALLEY LIMESTONE	127
							891							SPECIAL		891	SF	MISC.: UNISTONE COURTSTONE	127

CALCULATED LAM CHECKED LMO

GENERAL SUMMARY

S.R. 161/ EITERMAN RD. ROUNDABOUT

\\Akrn04\Data\2013\2013945\UNI\80748\roadway\sheets\80748GG001.dgn

SHEET NUMBER												PARTICIPATION		ITEM	ITEM EXT.	GRAND TOTAL	UNIT	DESCRIPTION	SEE SHEET NO.
51		117	118	119							OFFICE CALCS								
																		WATER WORK	
24														613		24	CY	LOW STRENGTH MORTAR BACKFILL (TYPE 2)	
2														638		2	EACH	WATER WORK, MISC.: CUT AND PLUG 12" WATER MAIN	82
3														638		3	EACH	WATER WORK, MISC.: 12" VALVE AND APPURTENANCES	82
979														638		979	FT	WATER WORK, MISC.: 12" DUCTILE IRON PIPE AND FITTINGS	82
112														638		112	FT	WATER WORK, MISC.: 20" STEEL CASING PIPE (OPEN TRENCH)	82
4														807*		4	EACH	VALVE BOXES ADJUSTED TO GRADE	
																		LIGHTING	
			16	2										625		18	EACH	CONNECTION, FUSED PULL APART	
			32	4										625		36	EACH	CONNECTION, UNFUSED PULL APART	
			14	2										625		16	EACH	TRANSFORMER BASE, TYPE AT-A, AS PER PLAN	117
			14	2										625		16	EACH	LIGHT POLE, CONVENTIONAL, 35', AS PER PLAN	117
			14	2										625		16	EACH	LIGHT POLE FOUNDATION, MISC.: 24" X 7' DEEP	117
			6471	261										625		6732	FT	NO. 4 AWG 600 VOLT DISTRIBUTION CABLE	
			1974	282										625		2256	FT	NO. 12 AWG POLE AND BRACKET CABLE	
			2104	89										625		2193	FT	CONDUIT, 2", 725.05	
			211	85										625		296	FT	CONDUIT, 4", 725.05 (SCH. 80), AS PER PLAN	117
			6	2										625		8	EACH	LUMINAIRE, MISC.: 8 BAR LED, TYPE II DISTRIBUTION, 480 VOLT	117
			4											625		4	EACH	LUMINAIRE, MISC.: 10 BAR LED, TYPE IV DISTRIBUTION, 480 VOLT	117
			4											625		4	EACH	LUMINAIRE, MISC.: 12 BAR LED, TYPE IV DISTRIBUTION, 480 VOLT	117
			2104	174										625		2278	FT	TRENCH, 30" DEEP, AS PER PLAN	117
			8											625		8	EACH	PULL BOX, 725.06, 18", AS PER PLAN	117
			14	2										625		16	EACH	GROUND ROD	
			2104	174										625		2278	FT	PLASTIC CAUTION TAPE	
			14	2										625		16	EACH	LIGHTING, MISC.: CADWELD CONNECTION	
		1												625		1	LS	LIGHTING, MISC.: ELECTRICAL LIGHTING TEST	117
																		UTILITY DUCT	
329														SPECIAL		329	FT	TRENCH, TYPE A	85-85A
203														SPECIAL		203	FT	TRENCH, TYPE B	85-85A
1021														SPECIAL		1021	FT	TRENCH, TYPE C	85-85A
5394														SPECIAL		5394	FT	4" PVC CONDUIT, SCH. 40 (TWC OR DUBLINK)	85A
10551														SPECIAL		10551	FT	5" PVC CONDUIT, SCH. 40, ELECTRIC RATED (AEP)	85
129														SPECIAL		129	CY	CONCRETE ENCASEMENT, PEA GRAVEL, CLASS "A"	85
1														SPECIAL		1	EACH	PRECAST CONCRETE ELECTRIC MANHOLE	85
2														SPECIAL		2	EACH	HAND HOLE, INSTALLATION ONLY (TWC OR DUBLINK)	85A

* CITY OF COLUMBUS CONSTRUCTION AND MATERIAL SPECIFICATIONS, 2012 EDITION. ALL OTHER ITEMS REFER TO THE ODOT CONSTRUCTION AND MATERIAL SPECIFICATIONS, 2013 EDITION.

CALCULATED LAM CHECKED LMO

GENERAL SUMMARY

S.R. 161/ EITERMAN RD. ROUNDABOUT

\\Akrn04\Data\2013\2013945\UNI\80748\roadway\sheets\80748GG001.dgn

SHEET NUMBER													PARTICIPATION		ITEM	ITEM EXT.	GRAND TOTAL	UNIT	DESCRIPTION	SEE SHEET NO.
17	18	19	20	21	91	92	93	94	95	96	97	98								
																			TRAFFIC CONTROL	
						71	38	5							621		114	EACH	RPM	
					218										621		218	EACH	RAISED PAVEMENT MARKER REMOVED	
												4			625		4	EACH	GROUND ROD	
									320.4	243.7					630		564.1	FT	GROUND MOUNTED SUPPORT, NO. 3 POST, TYPE S, AS PER PLAN	91
										4					630		4	EACH	SIGN POST REFLECTOR	
												1			630		1	EACH	OVERHEAD SIGN SUPPORT, TYPE TC-12.30, DESIGN 3	
												1			630		1	EACH	OVERHEAD SIGN SUPPORT, TYPE TC-12.30, DESIGN 7	
												1			630		1	EACH	OVERHEAD SIGN SUPPORT, TYPE TC-15.115	
									152.8	154.7					630		307.5	SF	SIGN, FLAT SHEET	
												482.0			630		482.0	SF	SIGN, OVERHEAD EXTRUSHEET	
									3						630		3	EACH	SIGN, STREET NAME, AS PER PLAN	91
												4			630		4	EACH	RIGID OVERHEAD SIGN SUPPORT FOUNDATION	
											41				630		41	EACH	REMOVAL OF GROUND MOUNTED SIGN AND DISPOSAL	
											1				630		1	EACH	REMOVAL OF GROUND MOUNTED SIGN AND REERECTION	
											31				630		31	EACH	REMOVAL OF GROUND MOUNTED POST SUPPORT AND DISPOSAL	
											2				630		2	EACH	REMOVAL OF GROUND MOUNTED POST SUPPORT AND REERECTION	
											3				630		3	EACH	REMOVAL OF OVERHEAD MOUNTED SIGN AND DISPOSAL	
											1				630		1	EACH	REMOVAL OF POLE MOUNTED SIGN AND DISPOSAL	
											1				630		1	EACH	REMOVAL OF OVERHEAD SIGN SUPPORT AND DISPOSAL	
									33	19					630		52	EACH	SIGNING MISC.: 2 1/4" SQUARE ANCHOR	91
						0.39	0.44	0.10							644		0.93	MILE	EDGE LINE, 4"	
							0.12								644		0.12	MILE	EDGE LINE, 6"	
						0.34	0.29	0.01							644		0.64	MILE	LANE LINE, 4"	
								0.09							644		0.09	MILE	CENTER LINE	
						1338	249								644		1587	FT	CHANNELIZING LINE, 8"	
							325								644		325	FT	CHANNELIZING LINE, 12"	
							80								644		80	FT	STOP LINE	
						112									644		112	FT	CROSSWALK LINE, AS PER PLAN	91
						411	435	252							644		1098	FT	TRANSVERSE/DIAGONAL LINE	
						8	1								644		9	EACH	LANE ARROW, 72"	
							360								644		360	FT	DOTTED LINE, 8"	
							173								644		173	FT	DOTTED LINE, 12"	
						5	3								647		8	EACH	LANE ARROW, TYPE A125	
							118								647		118	FT	PAVEMENT MARKING, MISC.: YIELD LINE, TYPE A125	91
																			TRAFFIC SIGNALS	
	1														632		1	EACH	REMOVAL OF TRAFFIC SIGNAL INSTALLATION, AS PER PLAN	18
																			MAINTENANCE OF TRAFFIC	
10															410		10	CY	TRAFFIC COMPACTED SURFACE, TYPE A OR B	17
	40														614		40	HOUR	LAW ENFORCEMENT OFFICER WITH PATROL CAR FOR ASSISTANCE	
															614		1	LS	DETOUR SIGNING	
87															614		87	DAY	PORTABLE CHANGEABLE MESSAGE SIGN, AS PER PLAN	17
		0.03													614		0.03	MILE	WORK ZONE LANE LINE, CLASS I	
		0.11	0.09												614		0.20	MILE	WORK ZONE CENTER LINE, DOUBLE SOLID, CLASS I	
		0.74	0.89	0.28											614		1.91	MILE	WORK ZONE EDGE LINE, CLASS I	
			504	100											614		604	FT	WORK ZONE CHANNELIZING LINE, CLASS I	
		23	54												614		77	FT	WORK ZONE STOP LINE, CLASS I	
			4	3											614		7	EACH	WORK ZONE ARROW, CLASS I	
		527													615		527	SY	PAVEMENT FOR MAINTAINING TRAFFIC, CLASS A	
50	60														616		110	MGAL	WATER	
															SPECIAL		1	LS	CPM SCHEDULE, AS PER PLAN	16
															614		1	LS	MAINTAINING TRAFFIC	18
															623		1	LS	CONSTRUCTION LAYOUT STAKES AND SURVEYING	
															624		1	LS	MOBILIZATION	

CALCULATED LAM
CHECKED LMO

GENERAL SUMMARY

S.R. 161/ EITERMAN RD. ROUNDABOUT

\\Akrn04\Data\2013\2013945\UNI\80748\roadway\sheets\80748GG001.dgn

REF NO.	SHEET NO.	STATION FROM	STATION TO	SIDE	607 FENCE, TYPE 47 (FT)	608 4" CONCRETE WALK, AS PER PLAN (SF)	608 CURB RAMP, AS PER PLAN (EACH)	608 CURB RAMP, MISC.: DETECTABLE WARNING, (8' X 2') (EACH)	608 WALKWAY, MISC., 10" CONCRETE WALK (SF)	609 COMBINATION CURB AND GUTTER, TYPE 2, AS PER PLAN (FT)	609 COMBINATION CURB AND GUTTER, TYPE 3, AS PER PLAN (FT)	609 CURB, TYPE 4-C, AS PER PLAN (FT)	609 CURB, TYPE 6 (FT)	609 CURB, TYPE 6, AS PER PLAN (FT)	609 CURB, MISC., 12" HEIGHT (FT)	609 CURB, MISC.: 7.5" HEIGHT (FT)	SPECIAL MISC., TRUCK APRON PAVEMENT (SF)	SPECIAL MISC., PAVERS (SF)
C1	55 - 56	40+87	47+06	LT						705								
C2	55 - 56	40+87	43+68	CENTER										629				
C3	55 - 56	6100+00 (WSW)	6101+55 (WSW)	RT						155								
C4	56 & 61	6101+55 (WSW)	6103+85 (WSW)	RT							228							
C5	56 & 61	6101+65 (WSW)	6103+43 (WSW)	RT											174			
C6	56	6003+22 (WCC)	6003+61 (WCC)	RT												58		
C7	56	6000+00 (WCC)	6004+40 (WCC)	CENTER								440						
C8	56	6000+00 (WCC)	6004+40 (WCC)	LT									365					
C9	56 & 60	45+64	50+96	CENTER										1116				
C10	56	6000+87 (WCC)	6001+15 (WCC)	RT												43		
C11	56	46+18	46+95	RT						77								
C12	56 & 61	6020+87 (WSE)	6021+97 (WSE)	RT							108							
C13	56 & 61	6021+09 (WSE)	6021+86 (WSE)	RT											74			
C14	56 & 61	6020+00 (WSE)	6020+87 (WSR)	RT						86								
C15	56 & 61	6103+20 (WSW)	6104+34 (WSW)	LT										370				
C16	56 & 61	6004+25 (WCC)	6000+35 (WCC)	RT												76		
C17	56 & 61	6103+85 (WSW)	6104+34 (WSW)	RT						49								
C18	56 & 61	6103+55 (WSW)	6103+75 (WSW)	RT											25			
L1	56	6003+22 (WCC)	6003+61 (WCC)	RT														287
L2	56 & 61	6101+65 (WSW)	6103+43 (WSW)	RT													851	
L3	56	6000+00 (WCC)	6004+40 (WCC)	CENTER													4389	
L4	56 & 61	6004+24 (WCC)	6000+36 (WCC)	RT														380
L5	56	6000+87 (WCC)	6001+15 (WCC)	RT														215
L6	56 & 61	6021+09 (WSE)	6021+86 (WSE)	RT													351	
L7	56 & 61	6103+55 (WSW)	6103+75 (WSW)	RT													91	
M1	56 & 61	6103+40 (WSW)	6103+58 (WSW)	RT			1	1	101									
M2	56 & 61	44+33	45+22	RT		502	2	2										
M3	56 & 61	6020+94 (WSE)	6021+13 (WSE)	RT		68	1	1	101									
M4	61	100+34	100+40	LT				1										
F1	56 & 60	46+00	48+06	RT	214													
TOTALS CARRIED TO GENERAL SUMMARY					214	570	4	5	202	1072	336	440	365	2115	273	177	5682	882

CALCULATED LAM
CHECKED LMO

ROADWAY SUBSUMMARY

S.R. 161/ EITERMAN RD. ROUNDABOUT

\\Akrn04\Data\2013\2013945\UNI\80748\roadway\sheets\80748GS001.dgn

REF NO.	SHEET NO.	STATION FROM	STATION TO	SIDE	601 ROCK CHANNEL PROTECTION, TYPE C WITH FILTER	611 12" CONDUIT, TYPE B	611 12" CONDUIT, TYPE C	611 24" CONDUIT, TYPE B	611 36" CONDUIT, TYPE C	611 CATCH BASIN, NO. 3A, AS PER PLAN	611 CATCH BASIN, NO. 2-2B	611 CATCH BASIN, NO. 2-3	611 CATCH BASIN RECONSTRUCTED TO GRADE	611 MANHOLE, NO. 3	611 MANHOLE, NO. 3 W/108" BASE I.D. & 12" WEIR, AS PER PLAN	611 MANHOLE RECONSTRUCTED TO GRADE	611 DRAINAGE STRUCTURE, MISC., 12" HDPE FLARED END SECTION WITH DISSIMILAR COUPLER	611 DRAINAGE STRUCTURE, MISC., 36" CONCRETE FLARED END SECTION	895 MANUFACTURED WATER QUALITY STRUCTURE, TYPE 4, AS PER PLAN
					CY	FT	FT	FT	FT	EACH	EACH	EACH	EACH	EACH	EACH	EACH	EACH	EACH	EACH
D1	61	100+14		RT.								1							
D2	79	6070+63 (WNW)	6070+65 (WNW)	LT.			13			1									
D3	79	6071+63 (WNW)	6071+90 (WNW)	LT.			29			1									
D5	79	6049+69 (WNE)	6050+10 (WNE)	LT.		55				1									
D6	79	6072+48 (WNW)		LT.							1								
D7	79	6072+58 (WNW)	6049+17 (WNE)	LT.					74					1					
D8	79	6052+80 (WNE)	47+16	LT./RT.		131				1									
D9	79	6049+54 (WNE)	6049+69 (WNE)	LT.			33							1					
D10	79	6049+60 (WNE)	6049+69 (WNE)	LT.			32			1									
D11	79	6049+54 (WNE)		LT.	1												1		
D13	79	6101+38 (WSW)	6101+40 (WSW)	RT.			22			1									
D14	79	6100+62 (WSW)	6100+63 (WSW)	RT.			21			1									
D97	79	47+16		RT.	2												1		
D98	79	6049+51 (WNE)		LT.	4													1	
D100	79	6071+63 (WNW)	6072+58 (WNW)	LT.					92										
D188	79	6049+17 (WNE)	6049+51 (WNE)	LT.				40	51						1				1
D190	79	42+63	42+65	RT.			20										1		
D191	79	42+65		RT.												1			
D192	79	42+61		RT.									1						
TOTALS CARRIED TO GENERAL SUMMARY					7	186	170	40	217	7	1	1	1	2	1	1	3	1	1

CALCULATED LAM
CHECKED LMO

DRAINAGE SUBSUMMARY

S.R. 161/ EITERMAN RD. ROUNDABOUT

\\Akrn04\Data\2013\2013945\UNI\80748\roadway\sheets\80748DS001.dgn

REF NO.	SHEET NO.	STATION FROM	STATION TO	STATION REF.	601 TIED CONCRETE BLOCK MAT, TYPE 1 (SY)	605 4" UNCLASSIFIED PIPE UNDERDRAINS, AS PER PLAN (FT)	605 4" BASE PIPE UNDERDRAINS, AS PER PLAN (FT)	605 6" SHALLOW PIPE UNDERDRAINS (30" DEPTH) (FT)	605 6" BASE PIPE UNDERDRAINS (18" DEPTH) (FT)	611 4" CONDUIT, TYPE B (FT)	611 4" CONDUIT, TYPE F FOR UNDERDRAIN OUTLET (FT)	611 6" CONDUIT, TYPE F FOR UNDERDRAIN OUTLETS (FT)	611 6" CONDUIT, TYPE B (FT)	611 PRECAST REINFORCED CONCRETE OUTLET (EACH)	FOR INFORMATION ONLY: 4" 45 DEGREE BEND (EACH)	4" 90 DEGREE BEND (EACH)	4" TEE (EACH)	4" WYE (EACH)	4" END CAP (EACH)	6" 45 DEGREE BEND (EACH)	6" 90 DEGREE BEND (EACH)	6" TEE (EACH)	6" WYE (EACH)	6" END CAP (EACH)
UD1	55	6070+00	6070+58	WNW			58												1					
UD2	55 & 56	6070+63	6071+85	WNW			112				10								1					
UD3	55	6100+00	6100+58	WSW			58												1					
UD4	55 & 56	6100+63	6101+33	WSW			60				10								1					
UD5	56	6071+90	6049+60	WNW/WNE			167				20													
UD6	56	6050+10	6052+80	WNE			250				20													
UD7	56	6000+00	6004+39.8	WCC			360																	
UD8	56	6000+33	6021+20	WCC/WSE						82							2							
UD9	56	6002+28	6050+10	WCC/WNE						56	10						1							
UD10	56 & 61	6101+38	101+68	WSW/EIT			376				10													
UD11	56 & 61	6022+76	101+68	WSE/EIT			324																	
UD12	56	6022+76	6022+92	WSE	2						26			1	1									
UD13	56 & 60	47+06	50+56	S.R. 161					401															2
UD14	56 & 60	47+06	50+64	S.R. 161				415																2
UD15	60	50+02	50+56	S.R. 161	2							53		1						1		2	1	
UD16	56 & 60	6022+80	803+57	WSE/W-S					395															2
UD17	60	800+00	802+75	RAMP W-S				274																1
UD18	60	801+87	803+62	RAMP W-S					177															2
UD19	60	802+65	802+78	RAMP W-S	2							45	28	1						1		3	1	
UD20	60	49+35	50+80	S.R. 161				145																1
UD21	60	49+35	50+80	S.R. 161					145															1
UD22	60	50+80	50+81	S.R. 161								34								1	2		1	
UD23	61	100+14	101+68	EITERMAN		160																		
UD24	61	100+14	101+68	EITERMAN		150																		
UD25	61	100+14	100+14	EITERMAN						49						1	1							
UD26	56	6049+60	6050+05	WNE			35				10								1					
TOTALS CARRIED TO GENERAL SUMMARY					6	310	1800	834	1118	187	116	132	28	3										

CALCULATED LAM
CHECKED LMO

UNDERDRAIN SUBSUMMARY

S.R. 161/EITERMAN RD. ROUNDABOUT

\\Akrn04\Data\2013\2013945\UNI\80748\roadway\sheets\80748DS002.dgn

CALCULATED LAM
CHECKED LMO

WATER WORK SUBSUMMARY

REF NO.	SHEET NO.	STATION FROM	STATION TO	SIDE	613 LOW STRENGTH MORTAR BACKFILL (TYPE 2)	638 WATER WORK, MISC.: CUT AND PLUG 12" WATER MAIN	638 WATER WORK, MISC.: 12" VALVE AND APPURTENANCES	638 WATER WORK, MISC.: 12" DUCTILE IRON PIPE AND FITTINGS	638 WATER WORK, MISC.: 20" STEEL CASING PIPE (OPEN TRENCH)	807* VALVE BOXES ADJUSTED TO GRADE
					CY	EACH	EACH	FT	FT	EACH
W1	56 & 61	43+80		RT						1
W2	56 & 61	43+85		RT						1
W3	56 & 61	45+97		RT						1
W4	83	42+59		LT		1				
W5	83 - 84	2000+50	2010+25	CENTER				979		
W6	84	2008+72		LT			1			
W7	83	2002+43	2003+15	CENTER					72	
W8	83	2003+80	2004+20	CENTER					40	
W9	84	2010+22		CENTER			1			
W10	84	2008+78		CENTER			1			
W11	84	50+08		LT		1				
W12	83 - 84	42+59	50+08	LT	24					
W13	61	101+36		LT						1
TOTALS CARRIED TO GENERAL SUMMARY					24	2	3	979	112	4

* CITY OF COLUMBUS CONSTRUCTION AND MATERIAL SPECIFICATIONS, 2012 EDITION. ALL OTHER ITEMS REFER TO THE ODOT CONSTRUCTION AND MATERIAL SPECIFICATIONS, 2013 EDITION.

UTILITY DUCT SUBSUMMARY

REF NO.	SHEET NO.	STATION FROM	STATION TO	SIDE	SPECIAL TRENCH, TYPE A	SPECIAL TRENCH, TYPE B	SPECIAL TRENCH, TYPE C	SPECIAL 4" PVC CONDUIT, SCH. 40 (TWC OR DUBLINK)	SPECIAL 5" PVC CONDUIT, SCH. 40, ELECTRIC RATED (AEP)	SPECIAL CONCRETE ENCASEMENT, PEA GRAVEL, CLASS "A"	SPECIAL PRECAST CONCRETE ELECTRIC MANHOLE	SPECIAL HAND HOLE, INSTALLATION ONLY (TWC OR DUBLINK)
					FT	FT	FT	FT	FT	CY	EACH	EACH
E1	88 - 89	1022+99	1031+48	CENTER	71	110	668	3976	7641	90		
E2	88	1024+22	1024+35	LT			29	58				
E3	88	1024+28	1024+35	LT			27	108				
E4	89 - 90	600+00	603+28	CENTER	258	70			2624	33		
E5	89 - 90	1031+48		CENTER							1	
E6	89	1030+87	1031+71	LT			89	392				1
E7	89	1031+03	1031+54	LT			52	104				1
E8	89	1031+48	1032+91	CENTER		23	120	540	286	6		
E9	89	1032+61	1032+91	LT			36	216				
TOTALS CARRIED TO GENERAL SUMMARY					329	203	1021	5394	10551	129	1	2

UTILITIES SUBSUMMARY

S.R. 161/EITERMAN RD. ROUNDABOUT

\\Akrn04\Data\2013\2013945\UNI\80748\roadway\sheets\80748US001.dgn

REF NO.	SHEET NO.	STATION FROM	STATION TO	SIDE	202 HEADWALL REMOVED EACH	202 WALK REMOVED SF	202 CONCRETE MEDIAN REMOVED SY	202 CURB REMOVED FT	202 PIPE REMOVED FT	202 GUARDRAIL REMOVED FT	202 MANHOLE REMOVED EACH	202 CATCH BASIN REMOVED EACH	SPECIAL DRILLED WATER WELL ABANDONED EACH	202 FENCE REMOVED FT	203 EXCAVATION CY	203 EMBANKMENT CY
R1	55	40+87	41+11	LT./RT.				53								
R2	56	43+11	43+15	LT.					11			1				
R3	56	44+67	44+72	LT.		39										
R4	56	44+81		LT.									1			
R5	56	43+00	43+57	RT.					49							
R6	56 & 61	45+10	45+38	RT.						40						
R7	56 & 60	47+29	51+00	LT./RT.			495									
R8	56	42+50	43+50	LT.					114							
R9	56	43+50	44+73	LT.					134		1					
R10	56	44+73	45+14	LT.					43			1				
R11	56	45+14	45+69	LT.					58							
R12	56	43+18	43+50	LT.					72							
R13	56 & 60	44+24	50+20	LT.										612		
R14	56 & 60	45+14	48+06	RT.										288		
R15	60	48+36	49+63	LT./RT.						127						
R16	60	48+36	49+01	LT.						65						
R17	60	48+86	48+87	LT.	1				86			1				
R18	60	49+05	50+32	LT.						127						
R19	60	49+67	50+32	LT.						65						
R20	60	49+34	49+51	RT.			10									
R21	60	49+51	50+35	RT.				84								
R22	60	49+50	50+27	RT.				83								
R23	60	48+65	49+50	RT.						88						
R24	60	48+64	48+80	RT.					67							
R25	61	101+41	102+23	RT.					84			1				
R26	61	101+30	102+58	RT.											180	180
TOTALS CARRIED TO GENERAL SUMMARY					1	39	505	220	718	512	1	4	1	900	180	180

CALCULATED LAM
CHECKED LMO

REMOVAL SUBSUMMARY

S.R. 161/ EITERMAN RD. ROUNDABOUT

\\Akrn04\Data\2013\2013945\UNI\80748\roadway\sheets\80748GS002.dgn

GENERAL NOTES

1. A DETAILED TEMPORARY AND PERMANENT EROSION CONTROL PLAN MUST BE SUBMITTED TO THE CITY ENGINEER FOR APPROVAL BEFORE CONSTRUCTION IF ONE IS NOT INCLUDED IN THE PLANS. THE DESIGN OF EROSION CONTROL SYSTEMS SHALL FOLLOW THE REQUIREMENTS OF OHIO EPA, ITEM 207 OF OHIO DEPARTMENT OF TRANSPORTATION (ODOT) STANDARD SPECIFICATIONS, AND THE CITY ENGINEER. THE CONTRACTOR SHALL BE CONSIDERED THE DEVELOPER OF THE STORMWATER DISCHARGE.

2. THE CONTRACTOR SHALL PROVIDE SEDIMENT CONTROL AT ALL POINTS WHERE WATER LEAVES THE PROJECT, INCLUDING WATERWAYS, OVERLAND SHEET FLOW, AND STORM SEWERS, WHETHER SPECIFICALLY SHOWN ON THE PLANS OR NOT.

3. ACCEPTED METHODS OF PROVIDING EROSION/SEDIMENT CONTROL INCLUDE BUT ARE NOT LIMITED TO: SEDIMENT FILTERS, SILT FILTER FENCE, ROCK CHECK DAMS, AND TEMPORARY GROUND COVER.

4. THE CONTRACTOR SHALL PROVIDE ADEQUATE DRAINAGE OF THE WORK AREA AT ALL TIMES CONSISTENT WITH EROSION CONTROL PRACTICES.

5. DISTURBED AREAS THAT WILL REMAIN UNWORKED FOR 45 DAYS OR MORE SHALL BE SEEDED WITHIN 7 CALENDAR DAYS OF THE DISTURBANCE. OTHER SEDIMENT CONTROLS THAT ARE INSTALLED SHALL BE MAINTAINED UNTIL VEGETATIVE GROWTH HAS BEEN ESTABLISHED. THE CONTRACTOR SHALL BE RESPONSIBLE FOR THE REMOVAL OF ALL TEMPORARY SEDIMENT DEVICES AT THE CONCLUSION OF CONSTRUCTION BUT NOT BEFORE GROWTH OF PERMANENT GROUND COVER.

6. ALL DENUDED AREAS, INCLUDING STOCKPILED TOPSOIL AND EXCAVATED MATERIAL, ARE TO BE PROTECTED THROUGH THE USE OF TEMPORARY SEEDING, OR COVERED WITH ANCHORED STRAW MULCH.

7. FINAL GRADING WILL BE CONSISTENT WITH PRECONSTRUCTION TOPOGRAPHY TO MAINTAIN DRAINAGE AND AESTHETICS.

8. REMOVE ONLY THE TREES, SHRUBS, AND GRASSES THAT MUST BE REMOVED TO PERMIT ACTUAL CONSTRUCTION. PROTECT THE REMAINING TO PRESERVE THEIR AESTHETIC AND EROSION CONTROL VALUE.

9. BACKFILL TRENCHES IMMEDIATELY AFTER USE. SEED AND MULCH TRENCH AREA WITHIN 2 WEEKS AFTER AREA OR SECTION HAS BEEN OPENED.

10. SETTLING FACILITIES, SEDIMENT FILTERS, PERIMETER CONTROLS, AND OTHER PRACTICES INTENDED TO TRAP SEDIMENT SHALL BE IMPLEMENTED AS THE FIRST STEP OF GRADING OR CONSTRUCTION AND WITHIN 7 DAYS FROM THE START OF GRUBBING. THEY SHALL CONTINUE TO FUNCTION UNTIL THE UPSLOPE DEVELOPMENT AREA IS RESTABILIZED.

11. STORM SEWER INLET PROTECTION - ALL STORM SEWER INLETS WHICH ACCEPT WATER RUNOFF FROM THE PROJECT AREA SHALL BE PROTECTED SO THAT SEDIMENT-LADEN WATER WILL NOT ENTER THE STORM SEWER SYSTEM WITHOUT FIRST BEING FILTERED OR OTHERWISE TREATED TO REMOVE SEDIMENT, UNLESS THE STORM SEWER SYSTEM DRAINS TO A SETTLING FACILITY. THESE CONTROLS SHALL BE SELECTED AND LOCATED AS INDICATED IN THE PLANS AND AS DIRECTED BY THE CITY ENGINEER.

12. WORKING IN OR CROSSING STREAMS - STREAMS INCLUDING BED AND BANKS SHALL BE RESTABILIZED IMMEDIATELY AFTER IN-CHANNEL WORK IS COMPLETED, INTERRUPTED, OR STOPPED. TO THE EXTENT PRACTICABLE, CONSTRUCTION VEHICLES SHALL BE KEPT OUT OF STREAMS. WHERE IN-CHANNEL WORK IS NECESSARY, PRECAUTIONS SHALL BE TAKEN TO STABILIZE THE WORK AREA DURING CONSTRUCTION TO MINIMIZE EROSION. WHERE A STREAM MUST BE CROSSED BY CONSTRUCTION VEHICLES REGULARLY DURING CONSTRUCTION, A TEMPORARY CULVERT SHALL BE PROVIDED.

13. CONSTRUCTION ACCESS ROUTES - MEASURES SHALL BE TAKEN TO PREVENT SOIL TRANSPORT ONTO SURFACES WHERE RUNOFF IS NOT CHECKED BY SEDIMENT CONTROLS, OR ONTO PUBLIC ROADS. THE CONTRACTOR SHALL BE RESPONSIBLE TO ENSURE THAT OFF-SITE TRACKING OF SEDIMENTS BY VEHICLES AND EQUIPMENT IS ELIMINATED.

14. SLOUGHING AND DUMPING - NO SOIL, ROCK, DEBRIS, OR ANY OTHER MATERIAL SHALL BE DUMPED OR PLACED INTO A WATER RESOURCE OR INTO SUCH PROXIMITY THAT IT MAY READILY SLOUGH, SLIP, OR ERODE INTO A WATER RESOURCE UNLESS SUCH DUMPING OR PLACING IS AUTHORIZED BY THE CITY ENGINEER. UNSTABLE SOILS PRONE TO SLIPPING OR LANDSLIDING SHALL NOT BE GRADED, EXCAVATED, FILLED, OR HAVE LOADS IMPOSED UPON THEM UNLESS THE WORK IS DONE IN ACCORDANCE WITH A QUALIFIED PROFESSIONAL ENGINEER'S RECOMMENDATIONS TO CORRECT, ELIMINATE, OR ADEQUATELY ADDRESS THE PROBLEMS.

15. MAINTENANCE AND INSPECTION - ALL TEMPORARY AND PERMANENT EROSION AND SEDIMENT CONTROL PRACTICES SHALL BE DESIGNED AND CONSTRUCTED TO MINIMIZE MAINTENANCE REQUIREMENTS. THEY SHALL BE MAINTAINED AND REPAIRED AS NEEDED TO ENSURE CONTINUED PERFORMANCE OF THEIR INTENDED FUNCTION. MAINTENANCE AND INSPECTION OF ALL EROSION/SEDIMENT CONTROL DEVICES REQUIRED BY THE CITY ENGINEER SHALL BE THE SOLE RESPONSIBILITY OF THE CONTRACTOR. INSPECTIONS SHALL BE PERFORMED BY THE CONTRACTOR IN THE PRESENCE OF THE CITY ENGINEER, ONCE EVERY 7 CALENDAR DAYS AND/OR WITHIN 24 HOURS AFTER A RAIN EVENT OF GREATER THAN 0.5 INCHES IN A 24-HOUR PERIOD. THESE INSPECTIONS SHALL IDENTIFY AREAS CONTRIBUTING TO STORMWATER DISCHARGES ASSOCIATED WITH THE PROJECT; EVALUATE THE ADEQUACY, IMPLEMENTATION, AND MAINTENANCE OF EXISTING AND PROPOSED EROSION/SEDIMENTATION MEASURES; AND DETERMINE WHETHER ADDITIONAL MEASURES ARE REQUIRED. ACCEPTABLE INSPECTION REPORTS SHALL BE PREPARED BY THE CONTRACTOR AND SUBMITTED TO THE CITY ENGINEER WITHIN 48 HOURS OF INSPECTION COMPLETION. THE REPORT SHALL CONTAIN THE RESULTS OF THE INSPECTION, NAME(S) AND QUALIFICATIONS OF PERSONNEL MAKING THE INSPECTION, MAJOR OBSERVATIONS RELATING TO THE IMPLEMENTATION OF THE TEMPORARY EROSION AND SEDIMENT CONTROL PLAN, A CERTIFICATION THAT THE FACILITY IS IN COMPLIANCE WITH THE PLAN, AND IDENTIFYING ANY INCIDENTS OF NONCOMPLIANCE.

16. OUTFLOWS FROM DEWATERING OPERATIONS - ALL WATER PRODUCED FROM CLEANING AND DEWATERING OPERATIONS, WHETHER SPECIFICALLY FROM TRENCH DEWATERING OPERATIONS OR FROM MORE EXTENSIVE DEWATERING OPERATIONS, SHALL BE DISCHARGED IN SUCH A MANNER AS TO ELIMINATE EROSION FROM SUCH DISCHARGE.

17. ADDITIONAL CONTROLS - THE CONTRACTOR SHALL ENSURE THAT NO SEDIMENTS ARE TRACKED OFF-SITE BY CONSTRUCTION EQUIPMENT, VEHICLES, AND WORKERS. THE CONTRACTOR SHALL ALSO ENSURE THAT NO SOLID OR LIQUID WASTE IS DISCHARGED INTO ANY STORMWATER FLOW.

18. TEMPORARY EROSION AND SEDIMENT CONTROL PLAN AVAILABILITY AND UPDATES - THE CONTRACTOR SHALL BE SOLELY RESPONSIBLE TO ENSURE THE IMMEDIATE AVAILABILITY OF THE TEMPORARY EROSION AND SEDIMENT CONTROL PLAN ON-SITE. THE CONTRACTOR SHALL ALSO BE SOLELY RESPONSIBLE TO PERFORM ALL UPDATES AND ADJUSTMENTS TO THE TEMPORARY EROSION AND SEDIMENT CONTROL PLAN.

NO. 2 STONE CHECK DAM

FURNISH MATERIAL CONFORMING TO ITEM 601 - ROCK CHANNEL PROTECTION, NO. 2 STONE, WITHOUT FILTER. PLACE THE ROCK OUTSIDE THE TRAFFIC CLEAR ZONE IN THE DITCH. THIS WORK SHALL BE PAID AT THE UNIT PRICE BID PER EACH FOR ITEM SPECIAL, NO. 2 STONE CHECK DAM.

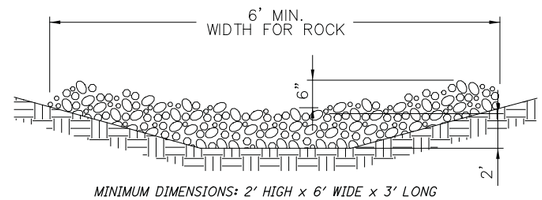

MINIMUM DIMENSIONS: 2' HIGH x 6' WIDE x 3' LONG

ELEVATION VIEW

NO. 2 STONE CHECK DAM DETAIL

PROHIBITED CONSTRUCTION ACTIVITIES

THE CONTRACTOR SHALL NOT USE CONSTRUCTION PROCEDURES, ACTIVITIES, OR OPERATIONS THAT MAY UNNECESSARILY IMPACT THE NATURAL ENVIRONMENTAL OR THE PUBLIC HEALTH AND SAFETY. PROHIBITED CONSTRUCTION PROCEDURES, ACTIVITIES, OR OPERATIONS INCLUDE, BUT ARE NOT LIMITED TO, THE FOLLOWING:

1. DISPOSING OF EXCESS OR UNSUITABLE EXCAVATED MATERIAL IN WETLANDS OR FLOOD PLAINS, EVEN WITH THE PERMISSION OF THE PROPERTY OWNER.

2. INDISCRIMINATE, ARBITRARY, OR CAPRICIOUS OPERATION OF EQUIPMENT IN ANY STREAM CORRIDORS, ANY WETLANDS, ANY SURFACE WATERS, OR OUTSIDE THE EASEMENT LIMITS.

3. PUMPING OF SEDIMENT LADEN WATER FROM TRENCHES OR OTHER EXCAVATIONS INTO ANY SURFACE WATERS, ANY STREAM CORRIDORS, ANY WETLANDS, OR STORM DRAINS.

4. DISCHARGING POLLUTANTS SUCH AS CHEMICALS, FUELS, LUBRICANTS, BITUMINOUS MATERIALS, RAW SEWAGE, AND/OR ANY OTHER HARMFUL WASTE, INTO OR ALONGSIDE OF RIVERS, STREAMS, IMPOUNDMENTS, OR INTO NATURAL OR MAN-MADE CHANNELS LEADING THERETO.

5. PERMANENT OR UNSPECIFIED ALTERATION OF THE FLOWLINE OF A STREAM.

6. DAMAGING VEGETATION OUTSIDE OF THE CONSTRUCTION AREA.

7. DISPOSAL OF TREES, BRUSH, AND OTHER DEBRIS IN ANY STREAM CORRIDORS, WETLANDS, OR SURFACE WATERS.

8. OPEN BURNING OF PROJECT DEBRIS WITHOUT A PERMIT.

9. STORING CONSTRUCTION EQUIPMENT AND VEHICLES AND/OR STOCKPILING CONSTRUCTION MATERIALS ON PROPERTY (PUBLIC OR PRIVATE) NOT PREVIOUSLY SPECIFIED BY THE CITY ENGINEER FOR SAID PURPOSES.

TEMPORARY EROSION AND SEDIMENT CONTROL

THE FOLLOWING ESTIMATED QUANTITIES ARE TO BE USED AS DIRECTED BY THE CITY ENGINEER FOR TEMPORARY EROSION AND SEDIMENT CONTROL MEASURES:

ITEM 207, INLET PROTECTION	14 EACH
ITEM 207, PERIMETER FILTER FABRIC FENCE	2000 FT
ITEM SPECIAL, NO. 2 STONE CHECK DAM	6 EACH

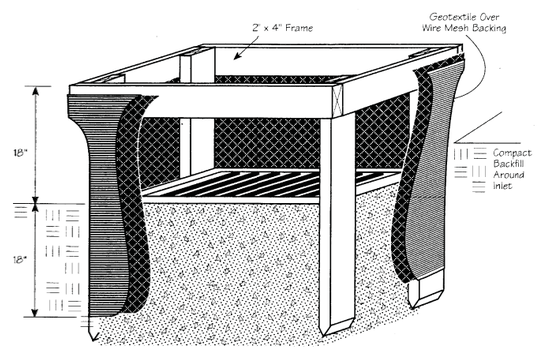

1. Inlet protection shall be constructed either before upslope land disturbance begins or before the storm drain becomes operational.

2. The earth around the inlet shall be excavated completely to a depth at least 18 in.

3. The wooden frame shall be constructed of 2-by-4-in. construction-grade lumber. The 2-by-4-in. posts shall be driven 1 ft. into the ground at four corners of the inlet and the top portion of 2-by-4-in. frame assembled using the overlap joint shown. The top of the frame shall be at least 6 in. below adjacent roads if ponded water would pose a safety hazard to traffic.

4. Wire mesh shall be of sufficient strength to support fabric with water fully impounded against it. It shall be stretched tightly around the frame and fastened securely to the frame.

5. Geotextile shall have an equivalent opening size of 20-40 sieve and be resistant to sunlight. It shall be stretched tightly around the frame and fastened securely. It shall extend from the top of the frame to 18 in. below the inlet notch elevation. The geotextile shall overlap across one side of the inlet so the ends of the cloth are not fastened to the same post.

6. Backfill shall be placed around the inlet in compacted 6-in. layers until the earth is even with notch elevation on ends and top elevation on sides.

7. A compacted earth dike or a check dam shall be constructed in the ditch line below the inlet if the inlet is not in a depression and if runoff bypassing the inlet will not flow to a settling pond. The top of earth dikes shall be at least 6 in. higher than the top of the frame.

INLET PROTECTION DETAIL

FOR CATCH BASINS

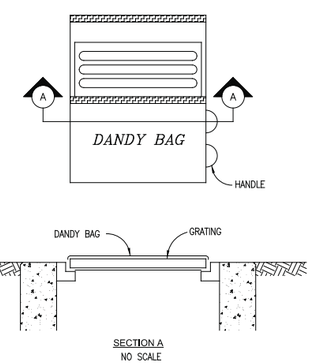

INSTALLATION: STAND GRATE ON END. PLACE DANDY BAG OVER GRATE. FLIP GRATE OVER SO THAT OPEN END IS UP. PULL UP SLACK. TUCK FLAP IN. BE SURE END OF GRATE IS COMPLETELY COVERED BY FLAP OR DANDY BAG WILL NOT FIT PROPERLY. HOLDING HANDLES, CAREFULLY PLACE DANDY BAG WITH GRATE INSERTED INTO CATCH BASIN FRAME SO THAT RED DOT ON THE TOP OF THE DANDY BAG IS VISIBLE.

MAINTENANCE: AFTER SILT HAS DRIED, REMOVE IT FROM THE SURFACE OF DANDY BAG WITH BROOM.

DANDY BAG DETAIL

FOR CATCH BASINS

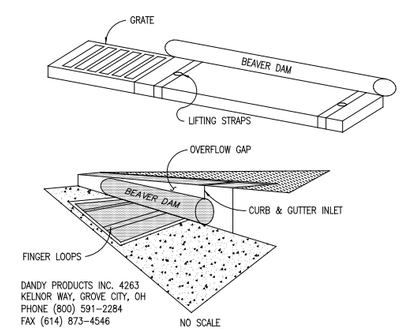

INSTALLATION: STAND GRATE ON END. SLIDE THE BEAVER DAM BAG ON WITH DAM ON TOP OF GRATE. PULL ALL EXCESS DOWN. LAY UNIT ON ITS SIDE. CAREFULLY TUCK FLAP IN. PRESS VELCRO STRIPS TOGETHER. INSTALL THE UNIT MAKING SURE FRONT EDGE OF GRATE IS INSERTED IN FRAME FIRST THEN LOWER BACK INTO PLACE. PRESS VELCRO DOTS TOGETHER WHICH ARE LOCATED UNDER LIFTING STRAPS. THIS INSURES STRAPS REMAIN FLUSH WITH GUTTER.

MAINTENANCE: WITH A STIFF BRISTLE BROOM SWEEP SILT & OTHER DEBRIS OFF SURFACE AFTER EACH EVENT.

BEAVER DAM DETAIL

FOR CURB & GUTTER INLETS

CALCULATED LMO
CHECKED KJG

EROSION CONTROL NOTES AND DETAILS

S.R. 161/ EITERMAN RD. ROUNDABOUT

\\Akrn04\Data\2013\2013945\UNI\80748\roadway\sheets\80748GN001.dgn

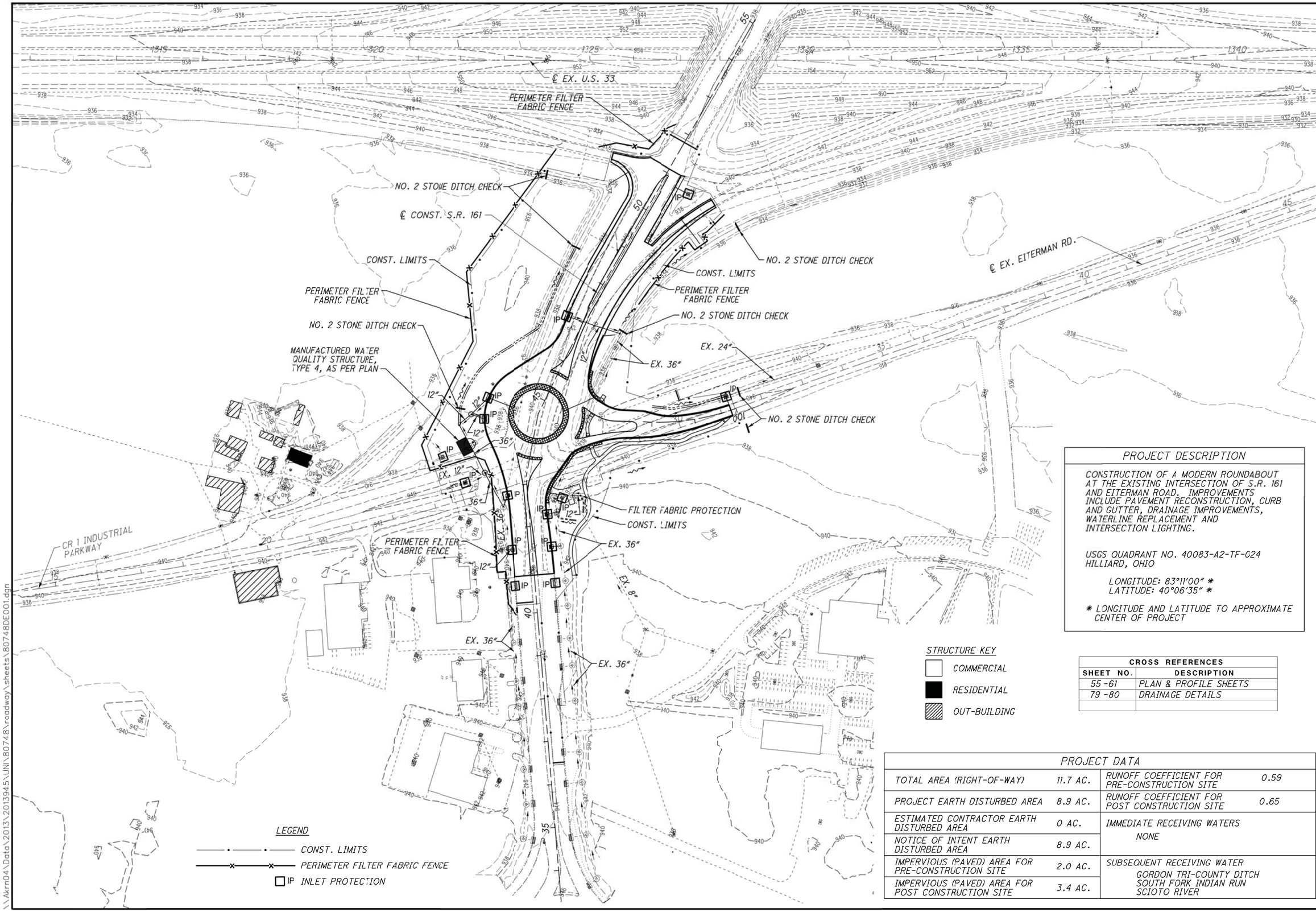

PROJECT DESCRIPTION

CONSTRUCTION OF A MODERN ROUNDABOUT AT THE EXISTING INTERSECTION OF S.R. 161 AND EITERMAN ROAD. IMPROVEMENTS INCLUDE PAVEMENT RECONSTRUCTION, CURB AND GUTTER, DRAINAGE IMPROVEMENTS, WATERLINE REPLACEMENT AND INTERSECTION LIGHTING.

USGS QUADRANT NO. 40083-A2-TF-C24
HILLIARD, OHIO

LONGITUDE: 83°11'00" *
LATITUDE: 40°06'35" *

* LONGITUDE AND LATITUDE TO APPROXIMATE CENTER OF PROJECT

CROSS REFERENCES	
SHEET NO.	DESCRIPTION
55 -61	PLAN & PROFILE SHEETS
79 -80	DRAINAGE DETAILS

PROJECT DATA

TOTAL AREA (RIGHT-OF-WAY)	11.7 AC.	RUNOFF COEFFICIENT FOR PRE-CONSTRUCTION SITE	0.59
PROJECT EARTH DISTURBED AREA	8.9 AC.	RUNOFF COEFFICIENT FOR POST CONSTRUCTION SITE	0.65
ESTIMATED CONTRACTOR EARTH DISTURBED AREA	0 AC.	IMMEDIATE RECEIVING WATERS NONE	
NOTICE OF INTENT EARTH DISTURBED AREA	8.9 AC.		
IMPERVIOUS (PAVED) AREA FOR PRE-CONSTRUCTION SITE	2.0 AC.	SUBSEQUENT RECEIVING WATER GORDON TRI-COUNTY DITCH SOUTH FORK INDIAN RUN SCIOTO RIVER	
IMPERVIOUS (PAVED) AREA FOR POST CONSTRUCTION SITE	3.4 AC.		

CROSS REFERENCES	
SHEET NO.	DESCRIPTION
48 - 52	ESTIMATED QUANTITIES
79 - 80	DRAINAGE DETAILS
72 - 75	ROUNDABOUT PVMT. DETAILS
76	WALKING PATH DETAILS
88	AEP CONDUIT PLAN

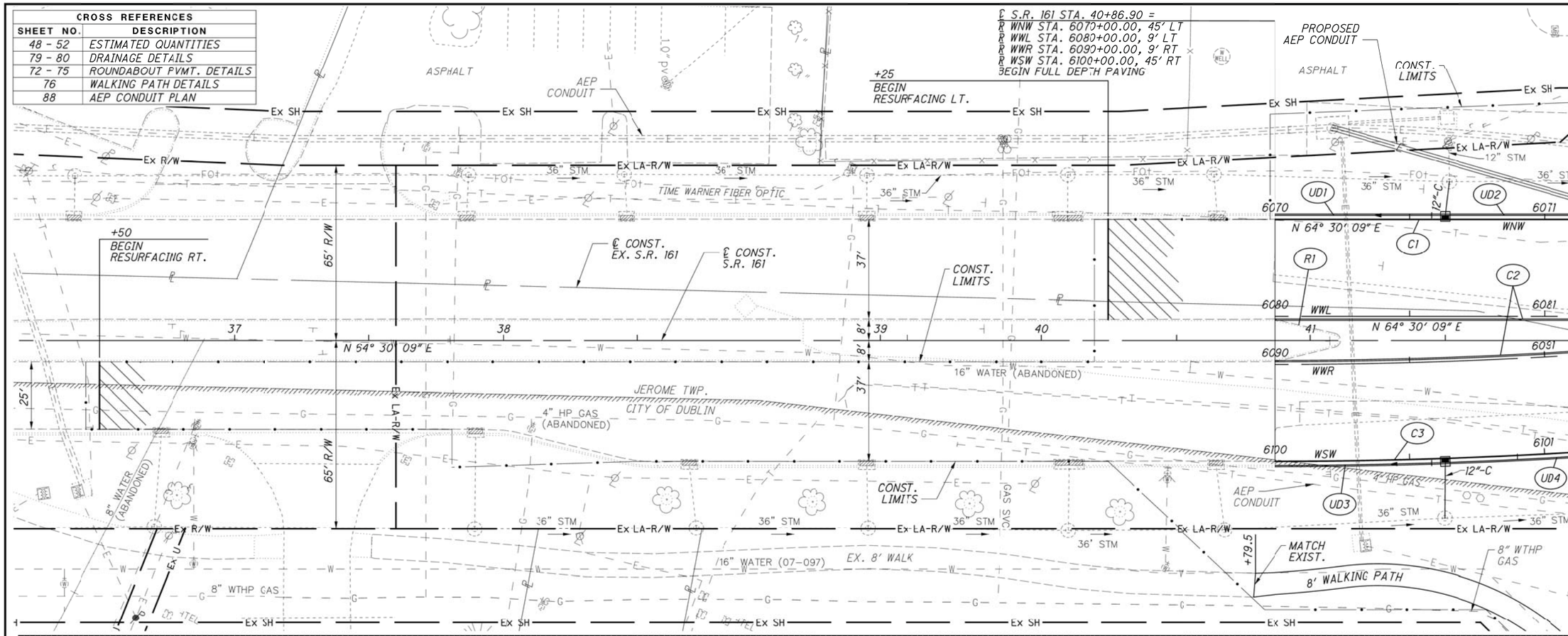

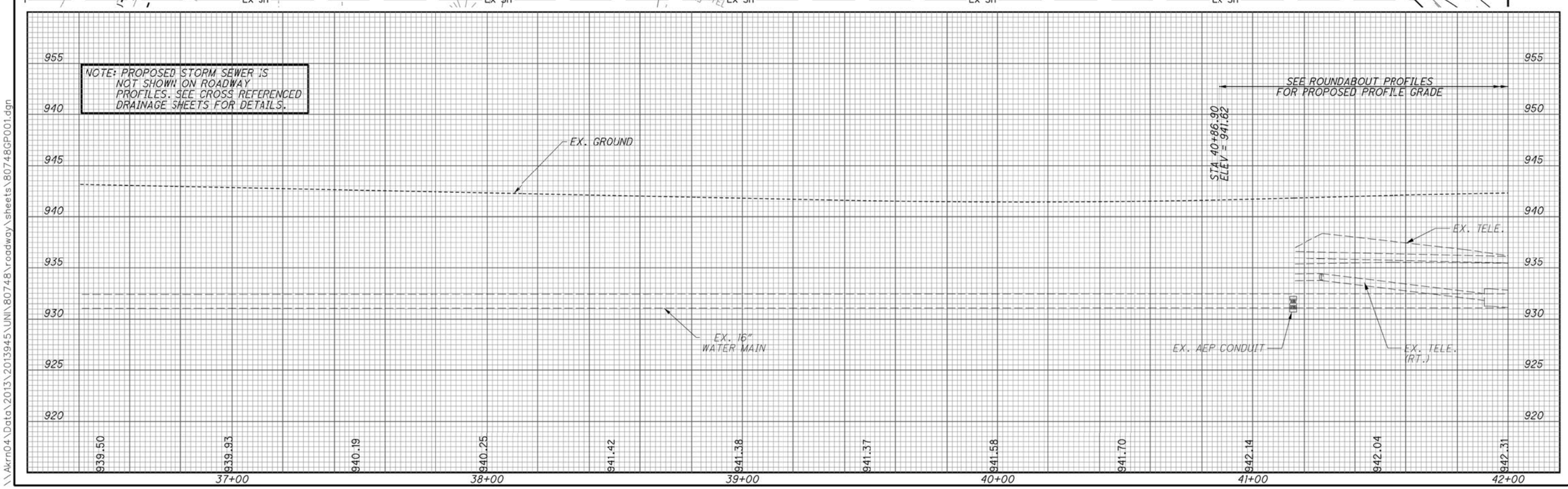

\\Akrn04\Data\2013\2013945\UNI\80748\roadway\sheets\80748GP001.dgn

HORIZONTAL SCALE IN FEET 0 10 20

CALCULATED LAM
CHECKED LMO

PLAN AND PROFILE - S.R. 161
STA. 36+40.00 TO STA. 42+00.00

S.R. 161/EITERMAN RD. ROUNDABOUT

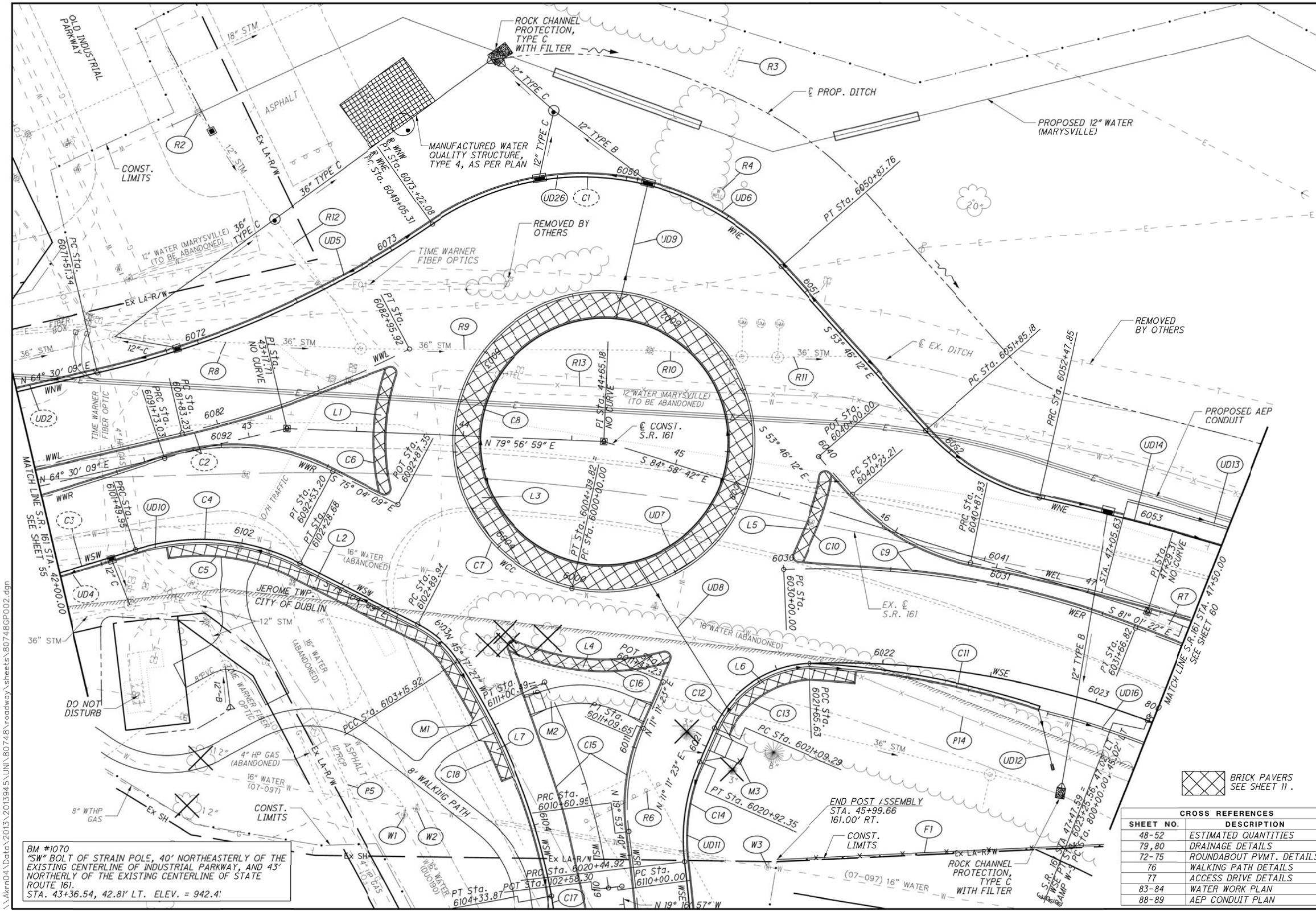

BRICK PAVERS SEE SHEET 11.

CROSS REFERENCES	
SHEET NO.	DESCRIPTION
48-52	ESTIMATED QUANTITIES
79,80	DRAINAGE DETAILS
72-75	ROUNDABOUT PVMT. DETAILS
76	WALKING PATH DETAILS
77	ACCESS DRIVE DETAILS
83-84	WATER WORK PLAN
88-89	AEP CONDUIT PLAN

HORIZONTAL SCALE IN FEET 0 10 20 40

CALCULATED LAM CHECKED LMO

PLAN - S.R. 161 ROUNDABOUT
STA. 42+00.00 TO STA. 47+50.00

S.R. 161/EITERMAN RD. ROUNDABOUT

\\Akron04\Data\2013\2013945\UNI\80748\roadway\sheets\80748GP002.dgn

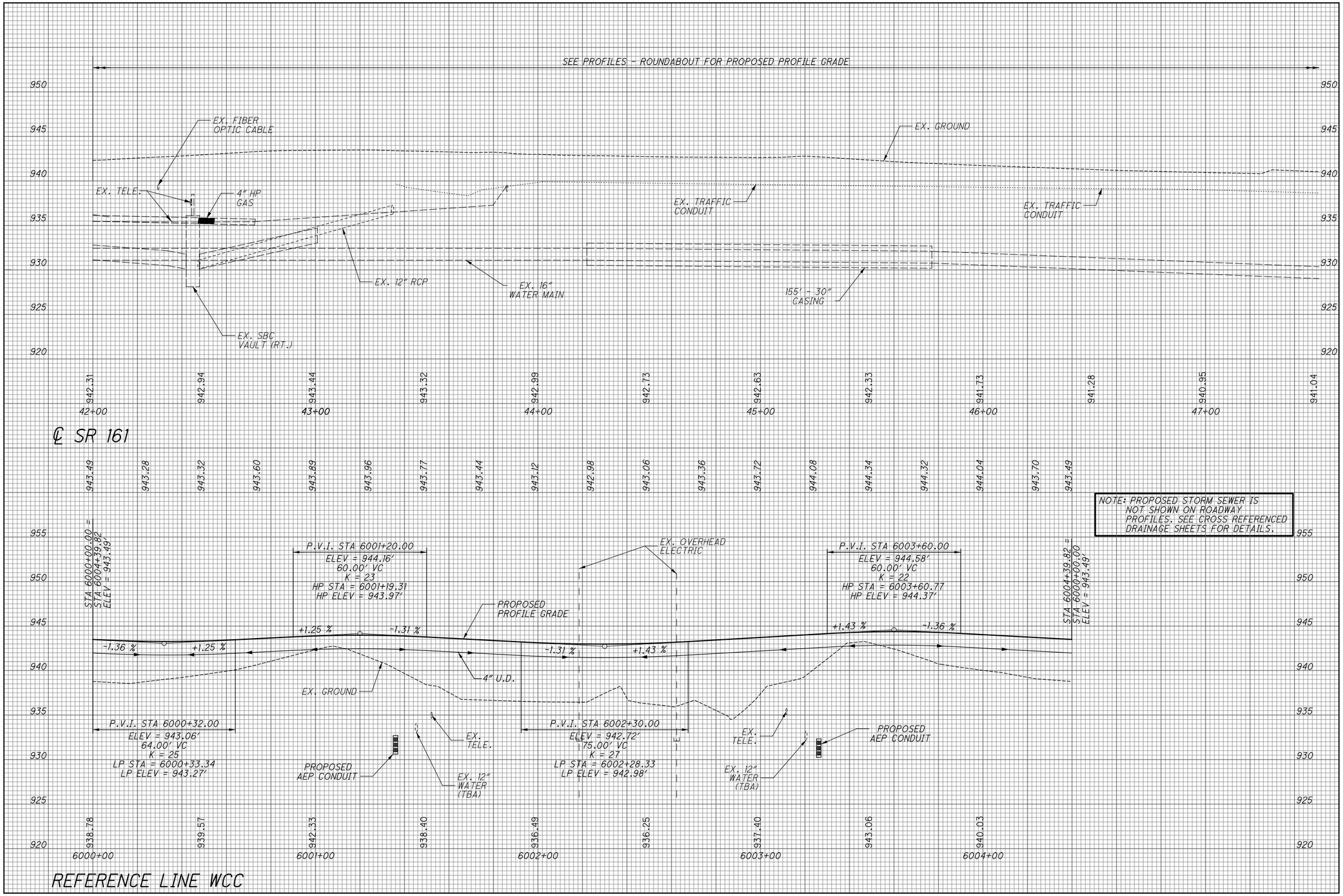

CALCULATED LAM
CHECKED LMO

PROFILE - S.R. 161 STA. 42+00.00 TO STA. 47+50
PROFILES - ROUNDABOUT REFERENCE LINE WCC

S.R. 161/EITERMAN RD. ROUNDABOUT

\\Akrn04\Data\2013\2013945\UNI\80748\roadway\sheets\80748GF001.dgn

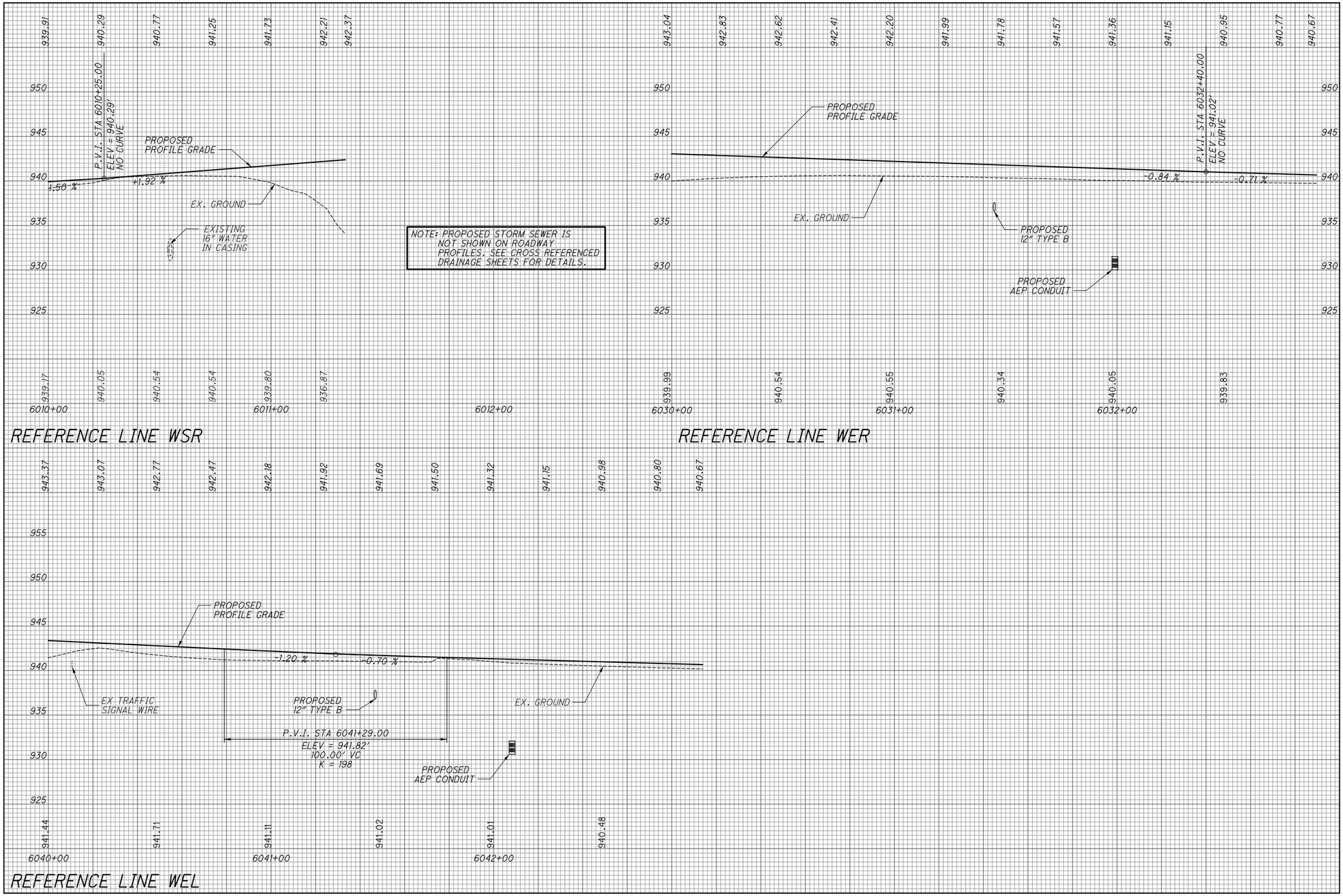

CALCULATED LAM
CHECKED LMO

PROFILES - ROUNDABOUT
REFERENCE LINES WSR, WER & WEL

S.R. 161/EITERMAN RD.
ROUNDABOUT

\\Akrn04\Data\2013\2013945\UNI\80748\roadway\sheets\80748GF002.dgn

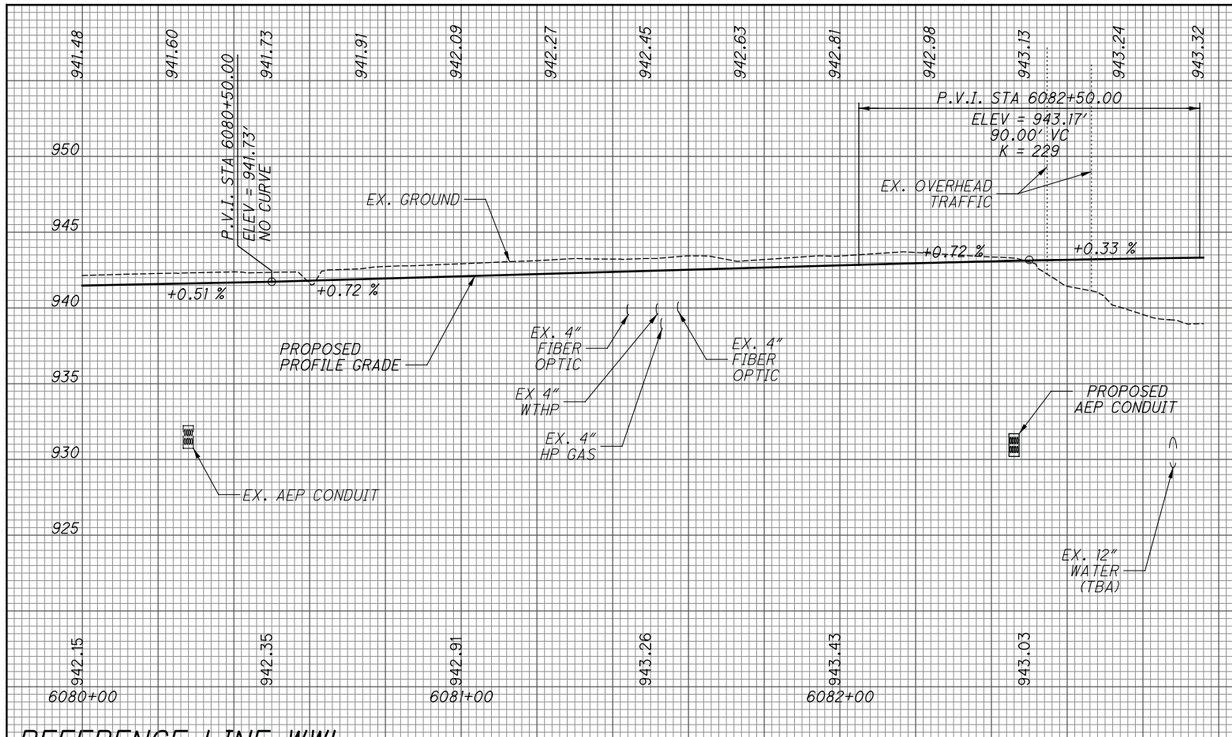

REFERENCE LINE WWL

REFERENCE LINE WSL

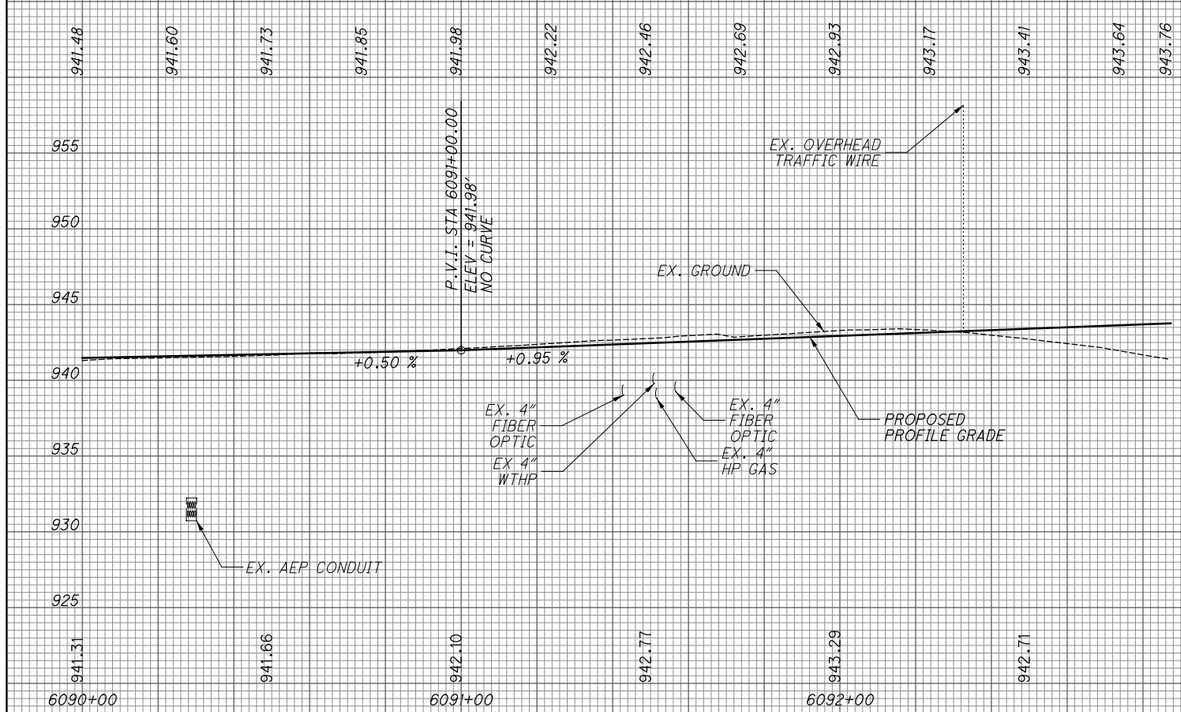

REFERENCE LINE WWR

NOTE: PROPOSED STORM SEWER IS NOT SHOWN ON ROADWAY PROFILES. SEE CROSS REFERENCED DRAINAGE SHEETS FOR DETAILS.

CALCULATED LAM
CHECKED LMO

PROFILES - ROUNDABOUT
REFERENCE LINES WWL, WWR & WSL

S.R. 161/ EITERMAN RD.
ROUNDABOUT

\\Akrn04\Data\2013\2013945\UNI\80748\roadway\sheets\80748GF003.dgn

℞ WNE STA. 6053+69.21, 43.27' RT. =
℄ S.R. 161 STA. 47+84.73

PROP. 12" WATER MAIN (MARYSVILLE)
PROPOSED AEP CONDUIT
EX. 12" WATER (MARYSVILLE) (TO BE ABANDONED)
EX. 12" WATER W/ 24" CASING (MARYSVILLE)
UD13 UD14 R13 UD15 R=65'
TWC
WNE
PROPOSED AEP CONDUIT
36'
12" STM
R17 R18 R16 C9 R15 R19 R7 +95.6
6042 WEL 48 49 50 51 52
6032 WER
S 81° 01' 22" E
℄ S.R. 161 STA. 48+49.65
℞ WEL STA. 6042+93.84, 9' RT
℞ WER STA. 6032+89.52, 9' LT
UD16
MATCH LINE 47+50 S.R. 161 SEE SHEET 56
31'
8' 8' 8'
25'
+50
31.27'
CONST. LIMITS
MATCH EXIST.
℄ CONSTRUCTION S.R. 161
EX. ℄ S.R. 161
EX. 16" WATER W/ 30" CASING (ABANDONED)
R20 R21 UD20 UD21
EX. OVERHEAD SIGN
+35
R23 UD17
801
802
4'
UD18 R22
16" WATER (ABANDONED)
UD22
+80
END RESURFACING
TRAF. BOX
JEROME TWP.
CITY OF DUBLIN
+50
BEGIN TAPER RT.
803
16" WATER (ABANDONED)
R24
R14
Ex LA-R/W
CONST. LIMITS
EX. 16" WATER W/ 30" CASING (ABANDONED)
UD19
+10
END FULL DEPTH PAVING
BEGIN RESURFACING
F1
CORNER POST ASSEMBLY
STA. 48+06.18
82.55' RT.
Ex U

CROSS REFERENCES	
SHEET NO.	DESCRIPTION
48 - 52	ESTIMATED QUANTITIES
75	PAVEMENT DETAILS
84	WATER WORK PLAN
89 - 90	AEP CONDUIT PLAN

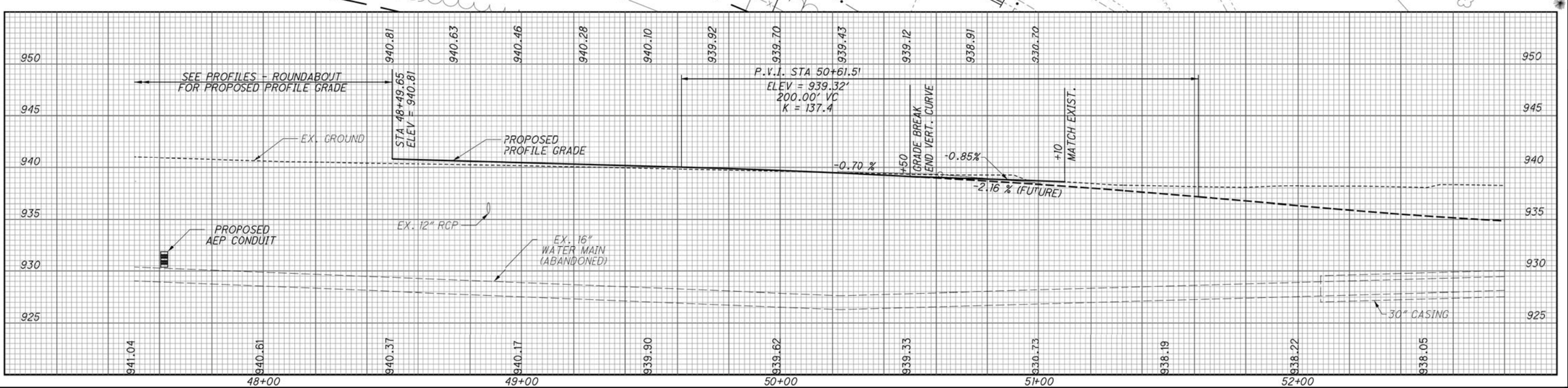

HORIZONTAL SCALE IN FEET 0 10 20 40

CALCULATED LAM
CHECKED LMO

PLAN AND PROFILE - S.R. 161
STA. 47+50.00 TO STA. 52+00.00

S.R. 161/EITERMAN RD. ROUNDABOUT

\\Akrn04\Data\2013\2013945\UNI\80748\roadway\sheets\80748GP003.dgn

CROSS REFERENCES	
SHEET NO.	DESCRIPTION
48 - 52	ESTIMATED QUANTITIES
70	DRAINAGE DETAILS
72 - 75	ROUNDABOUT PVMT. DETAILS
76	WALKING PATH DETAILS
81	UNDERDRAIN DETAILS
88	AEP CONDUIT PLAN

PAVEMENT TRANSITION DETAILS				
CURVE NO.	P.I. STATION	Dc	RADIUS	LENGTH
1	STA. 101+04.72	10° 44′ 56″	533.03′	50.02′
2	STA. 101+91.71	10° 45′ 08″	532.87′	133.41′
3	STA. 100+77.62	11° 15′ 34″	508.87′	124.39′
4	STA. 101+68.14	38° 11′ 50″	150.00′	51.30′

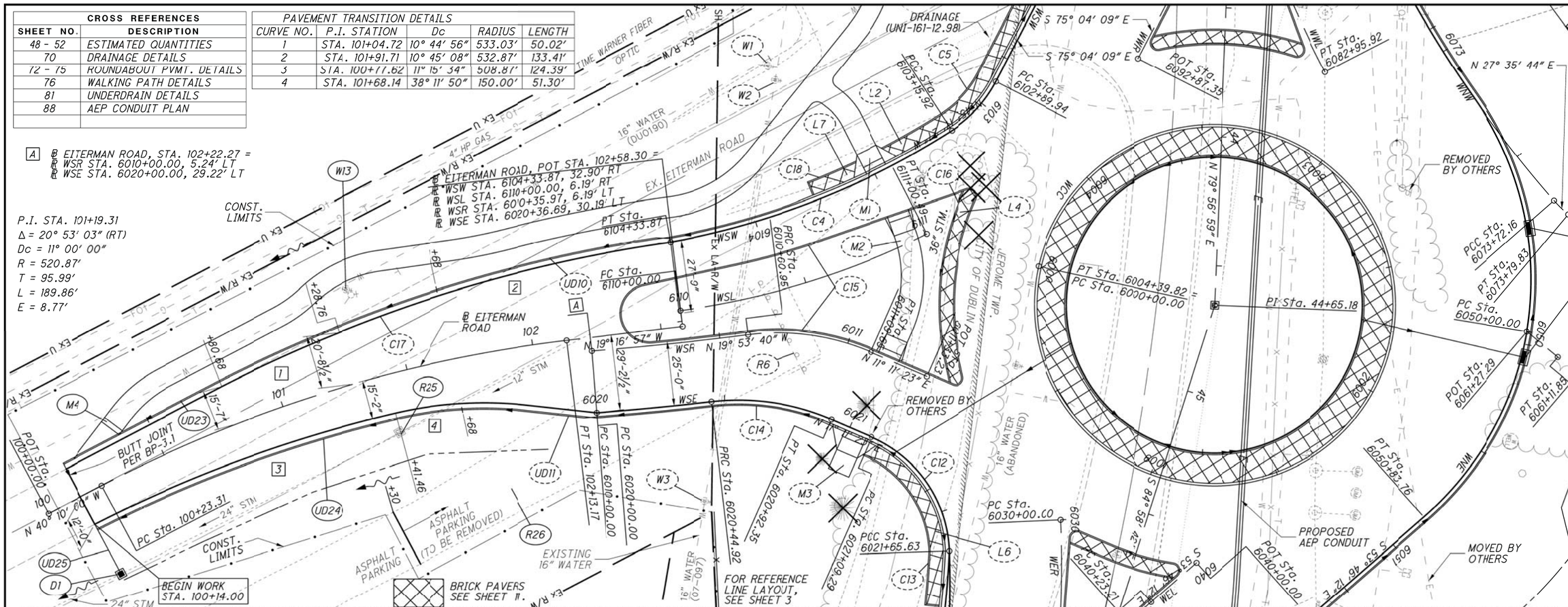

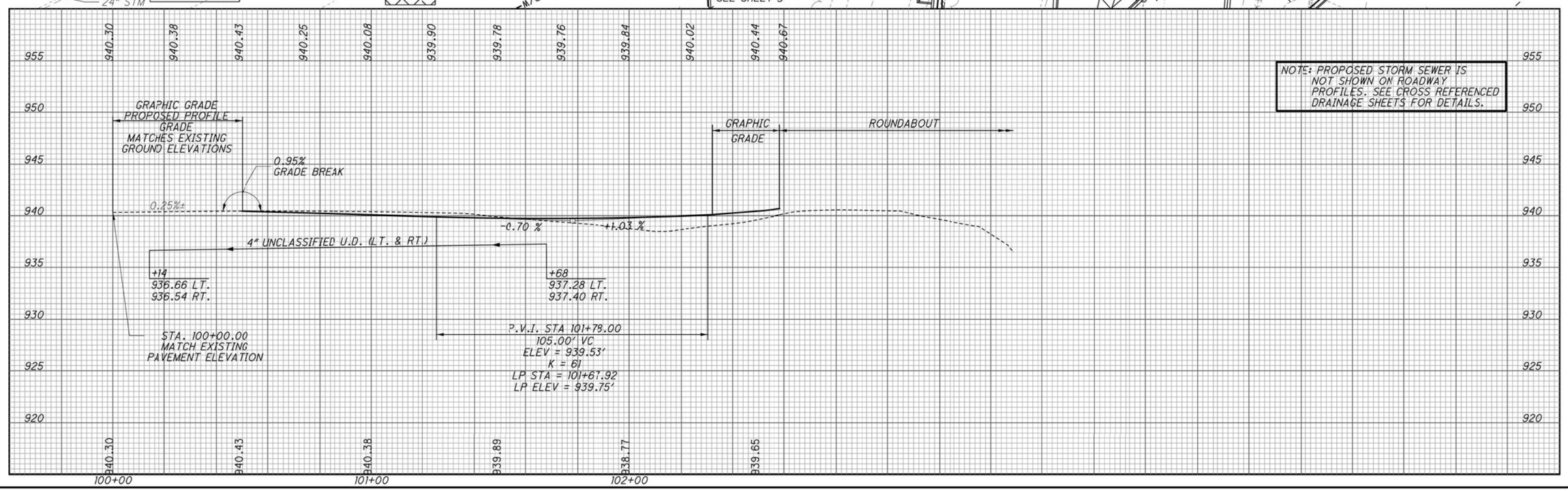

PLAN AND PROFILE - EITERMAN ROAD STA. 100+00.00 TO STA. 102+58.30

S.R. 161/EITERMAN RD. ROUNDABOUT

\\Akrn04\Data\2013\2013945\UNI\80748\roadway\sheets\80748GP004.dgn

SEEDING	
END WIDTH	SQ. YDS.

END AREA		VOLUME	
CUT	FILL	CUT	FILL

CALCULATED LAM
CHECKED LMO

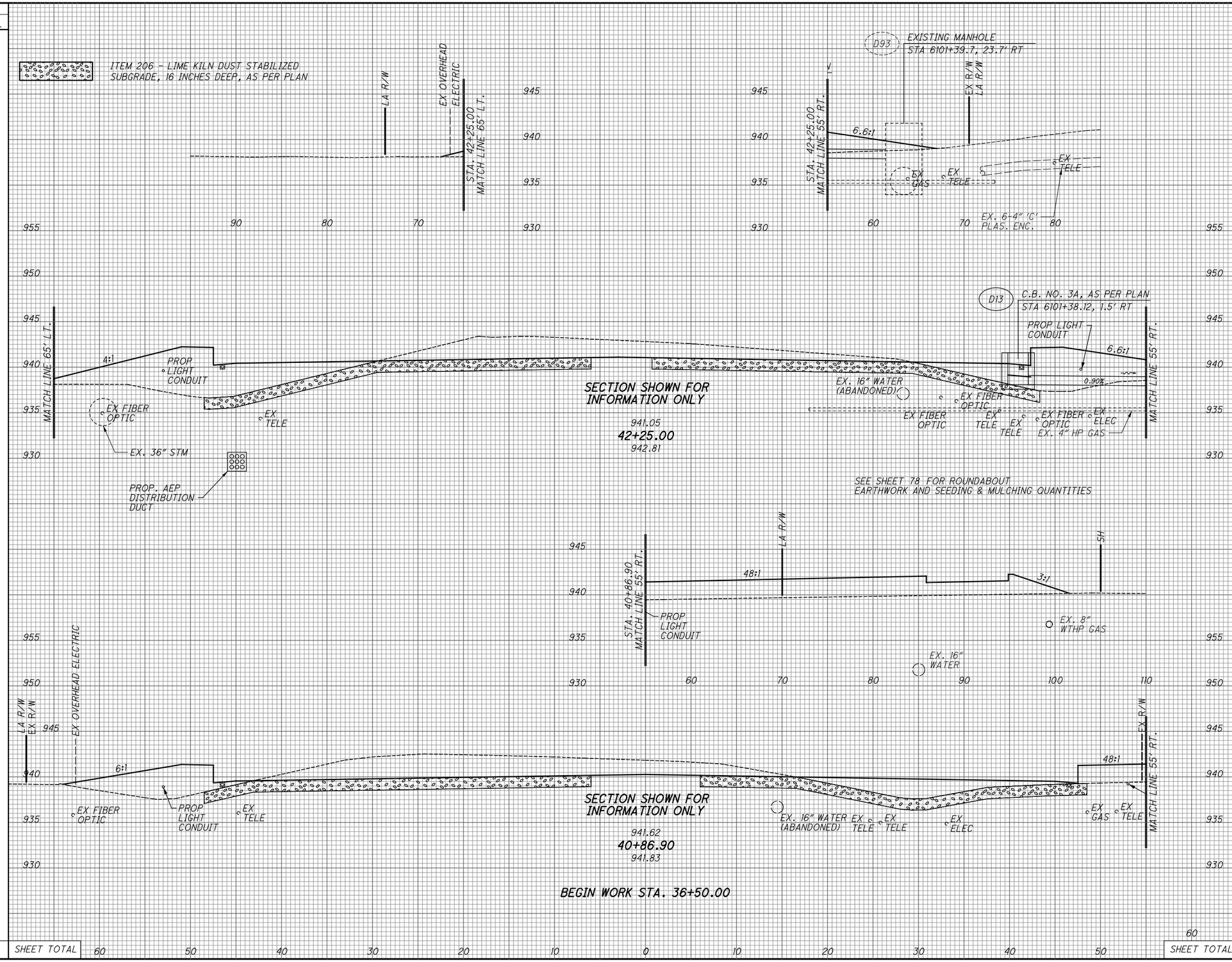

0	SHEET TOTAL			0	0

CROSS SECTIONS - S.R. 161
STA. 40+86.90 TO STA. 42+25.00

S.R. 161/ EITERMAN RD. ROUNDABOUT

\\Akrn04\Data\2013\2013945\UNI\80748\roadway\sheets\80748XS001.dgn

SEEDING		END AREA		VOLUME	
END WIDTH	SQ. YDS.	CUT	FILL	CUT	FILL
12		112	54		
64				208	104
11		113	58		
0		0	0		
64	SHEET TOTAL			208	104

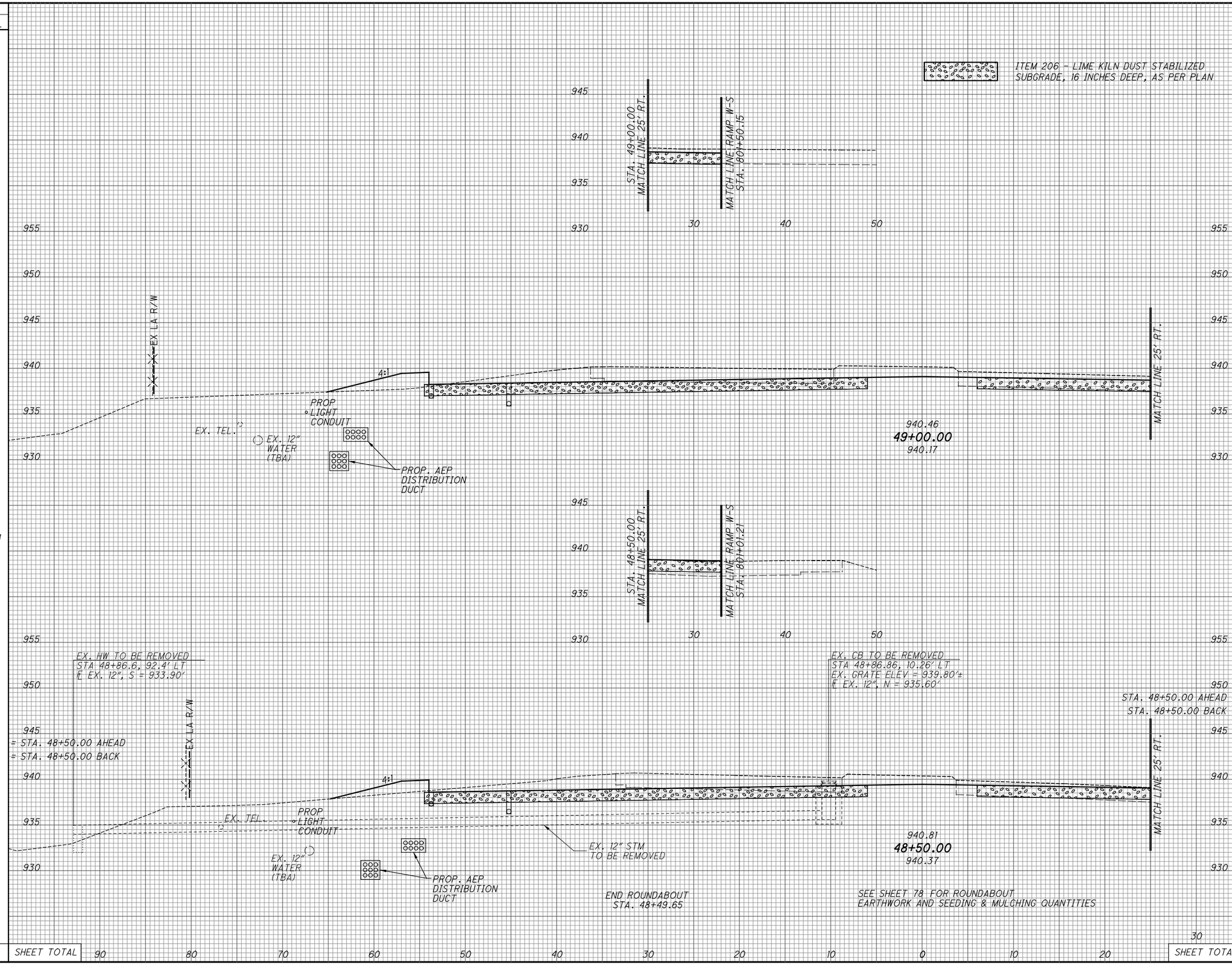

CALCULATED LAM
CHECKED LMO

CROSS SECTIONS - S.R. 161
STA. 48+50.00 TO STA. 49+00.00

S.R. 161/ EITERMAN RD. ROUNDABOUT

\\Akrn04\Data\2013\2013945\UNI\80748\roadway\sheets\80748XS001.dgn

SEEDING	
END WIDTH	SQ. YDS.

END AREA		VOLUME	
CUT	FILL	CUT	FILL

CALCULATED LAM
CHECKED LMO

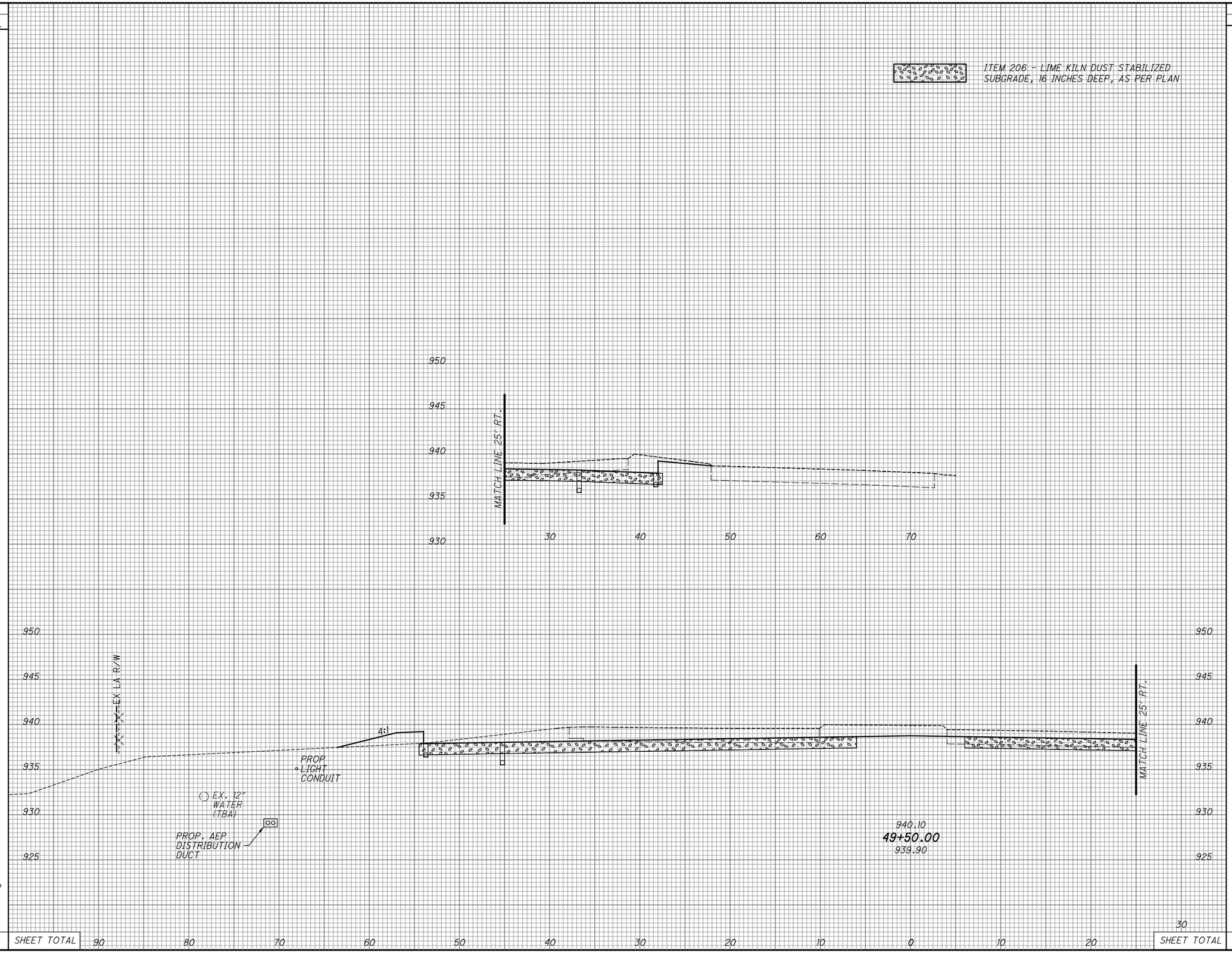

21					127	42	
92	SHEET TOTAL					221	89
92	SHEET TOTAL					221	89

CROSS SECTIONS - S.R. 161
STA. 49+50.00

S.R. 161/ EITERMAN RD. ROUNDABOUT

\\Akrn04\Data\2013\2013945\UNI\80748\roadway\sheets\80748XS001.dgn

SEEDING		END AREA		VOLUME	
END WIDTH	SQ. YDS.	CUT	FILL	CUT	FILL
11		167	21		
	64			275	59
12		130	43		
	92			238	79
	156			513	138

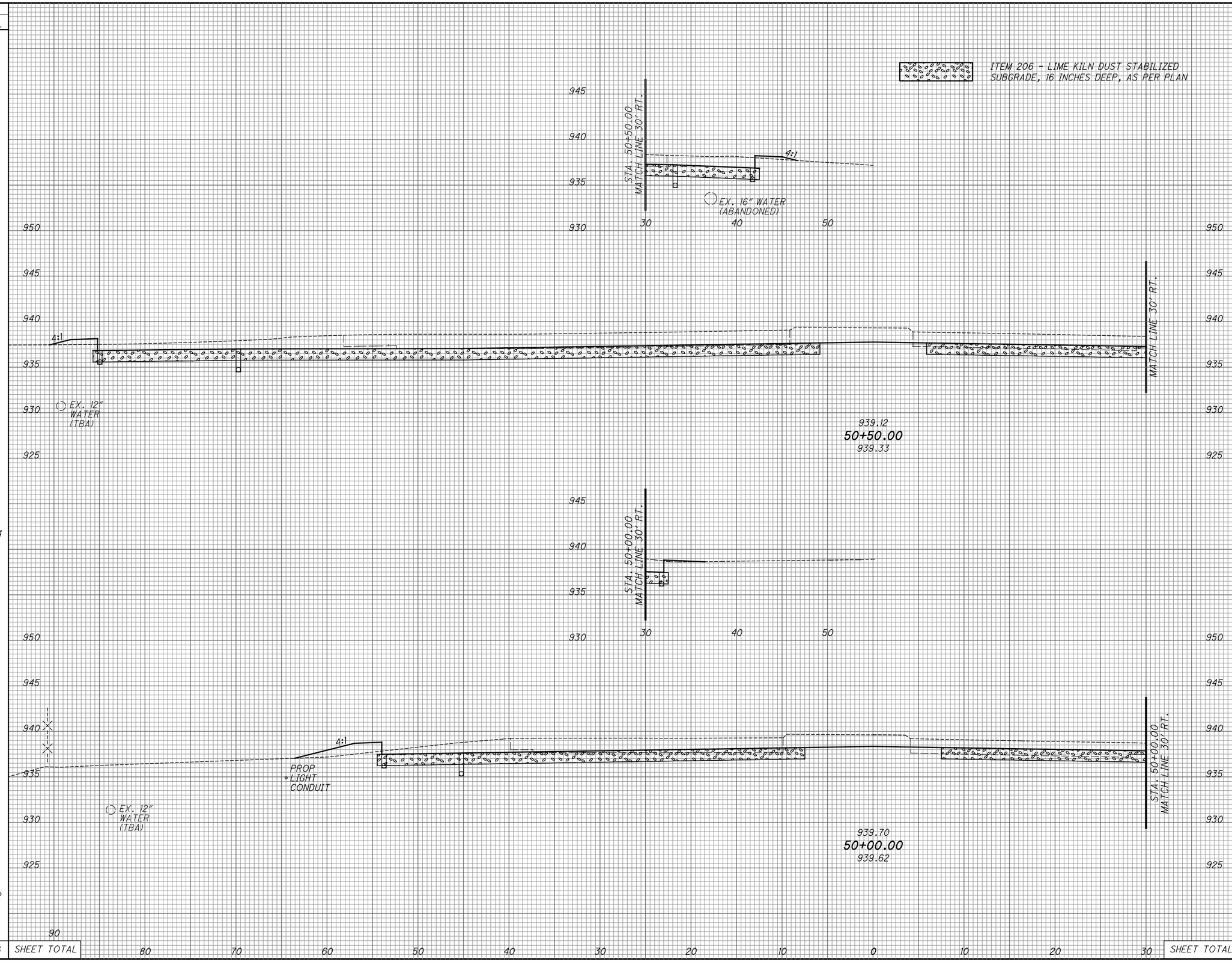

CALCULATED LAM
CHECKED LMO

CROSS SECTIONS - S.R. 161
STA. 50+00.00 TO STA. 50+50.00

S.R. 161/ EITERMAN RD.
ROUNDABOUT

\\Akrn04\Data\2013\2013945\UNI\80748\roadway\sheets\80748XS001.dgn

SEEDING	
END WIDTH	SQ. YDS.
0	
16	
	90
SHEET TOTAL	90

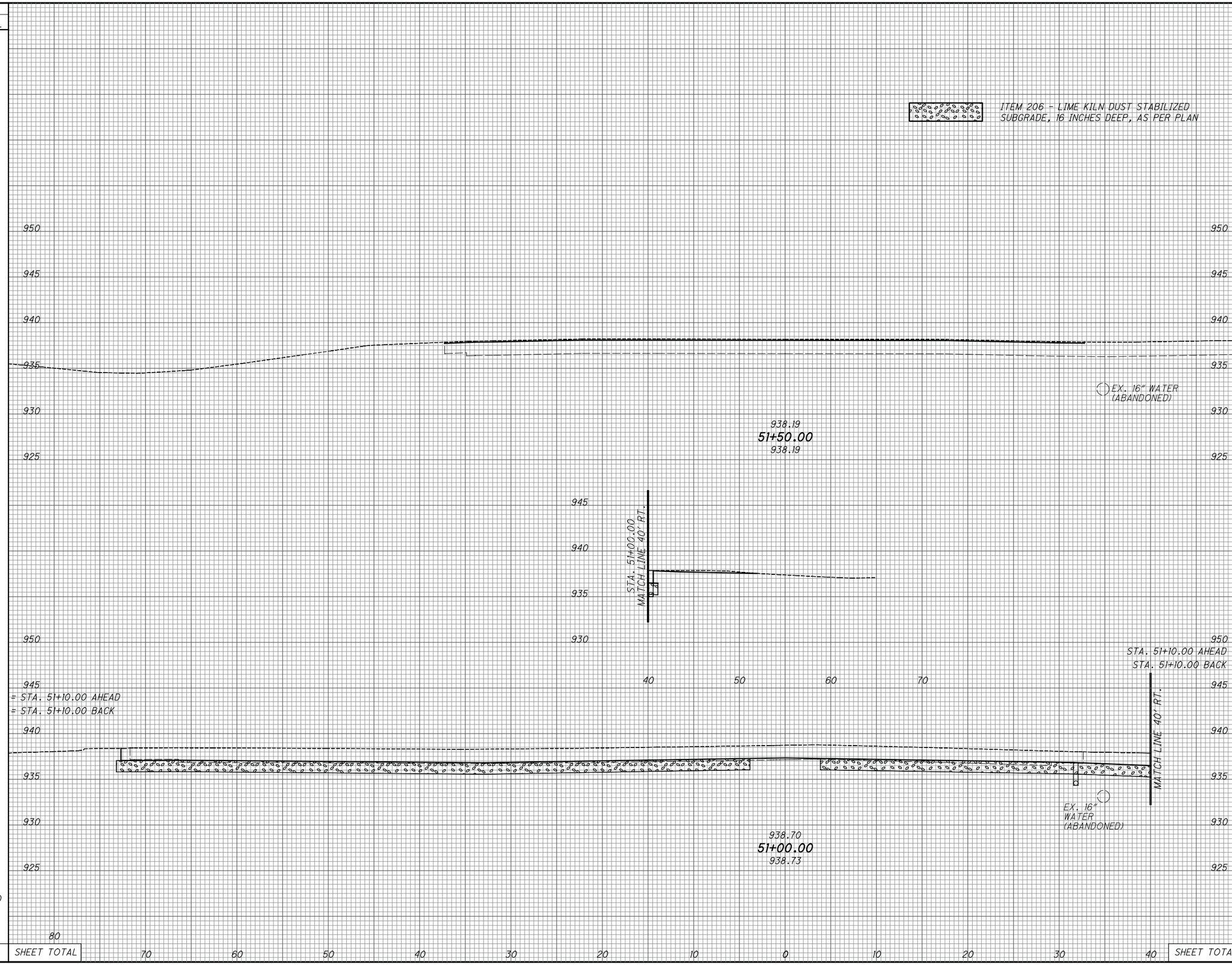

END AREA		VOLUME	
CUT	FILL	CUT	FILL
0	0		
176	18		
		381	41
SHEET TOTAL		366	43

CALCULATED LAM
CHECKED LMO

CROSS SECTIONS - S.R. 161
STA. 51+00.00 TO STA. 51+50.00

S.R. 161/ EITERMAN RD. ROUNDABOUT

\\Akrn04\Data\2013\2013945\UNI\80748\roadway\sheets\80748XS001.dgn

SEEDING END WIDTH	SEEDING SQ. YDS.	END AREA CUT	END AREA FILL	VOLUME CUT	VOLUME FILL
27	142	19	77	19	131
24	133	2	65	2	119
24 = STA. 800+00.00 AHEAD		0	63		
0 = STA. 800+00.00 BACK		0	0		
275	SHEET TOTAL			21	250

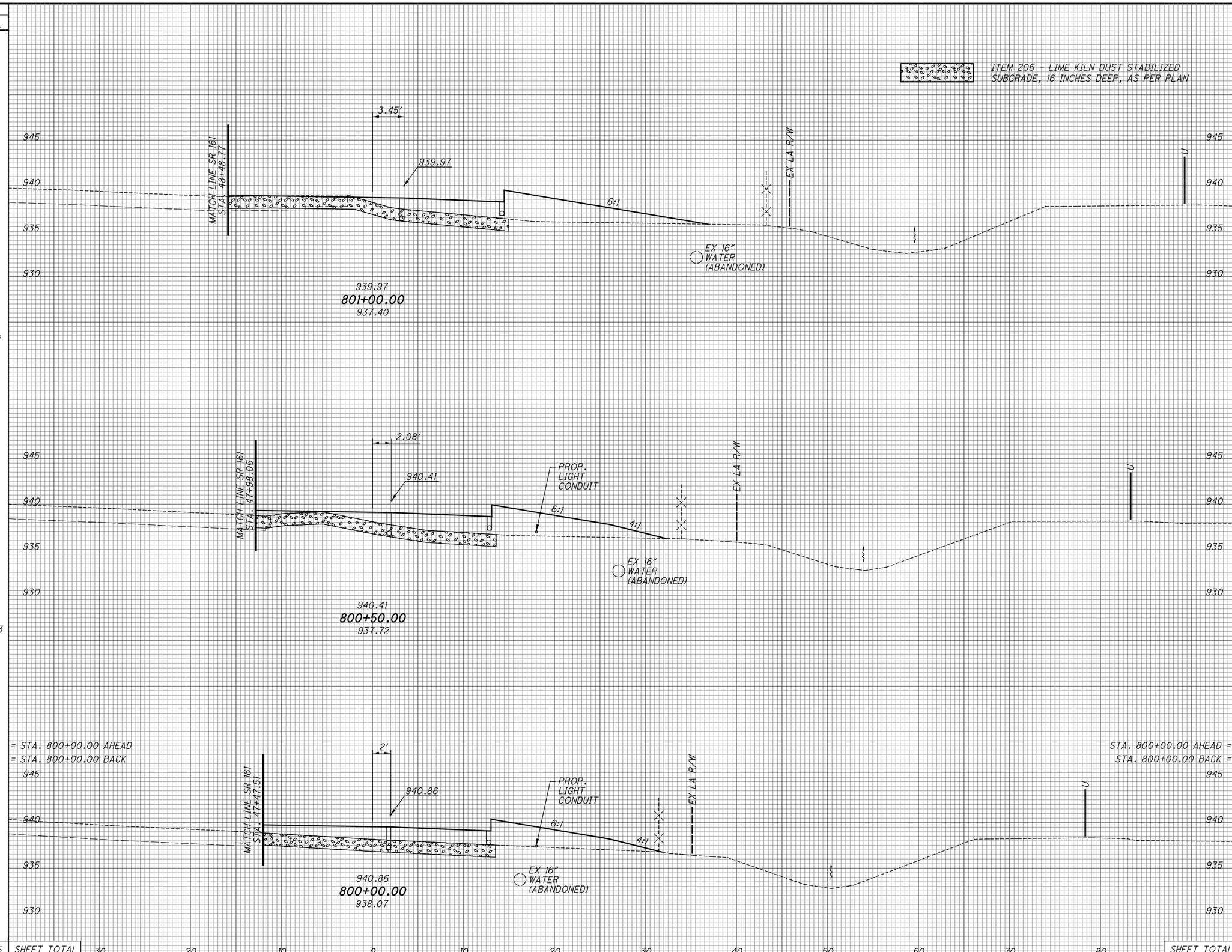

CALCULATED LAM
CHECKED LMO

CROSS SECTIONS - RAMP W-S
STA. 800+00.00 TO STA. 801+00.00

S.R. 161/ EITERMAN RD. ROUNDABOUT

\\Akrn04\Data\2013\2013945\UNI\80748\roadway\sheets\80748XS003.dgn

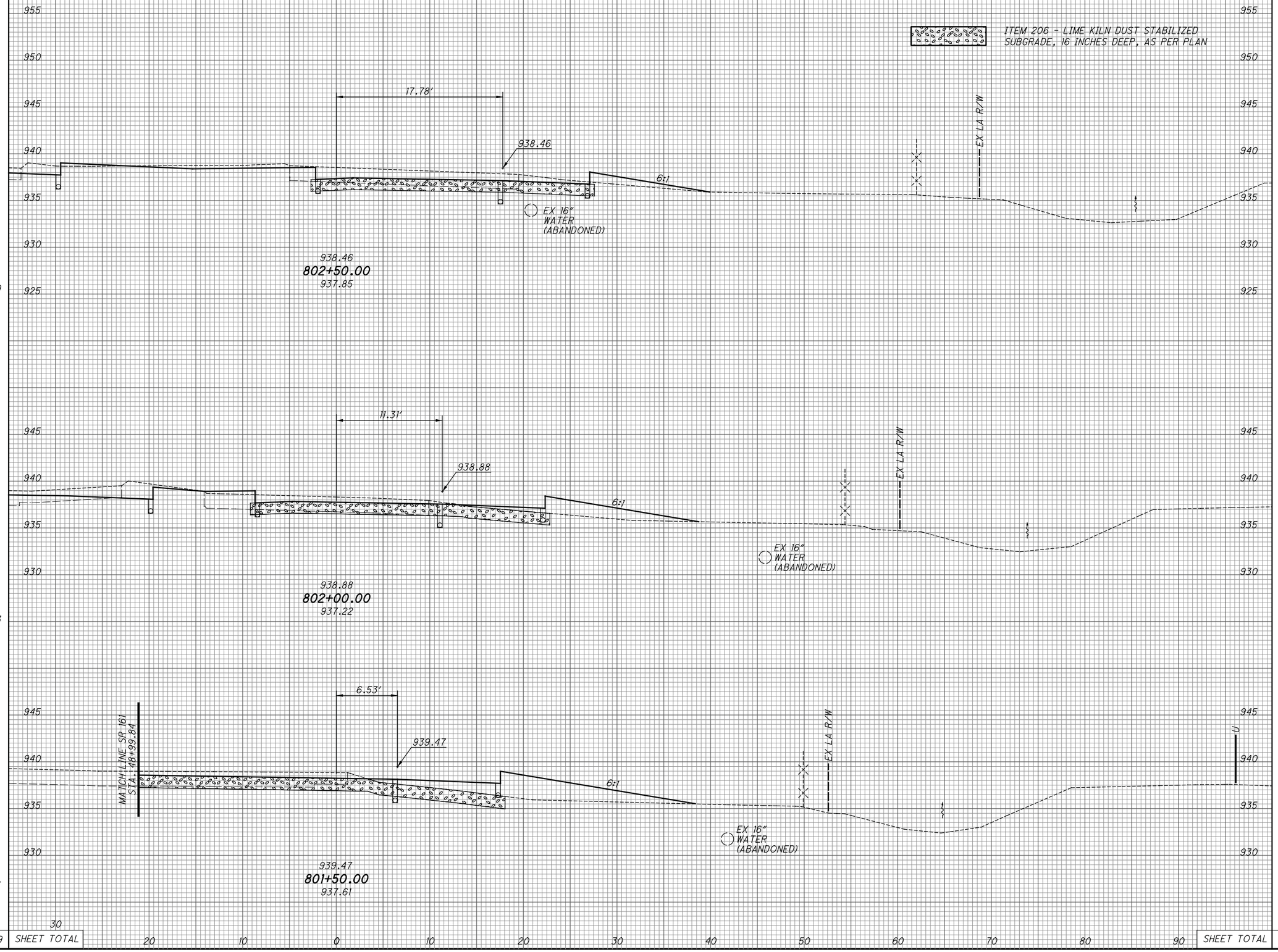

SEEDING END WIDTH	SEEDING SQ. YDS.	END AREA CUT	END AREA FILL	VOLUME CUT	VOLUME FILL
39		47	25		
	189			80	69
29		39	49		
	153			69	105
26		35	64		
	147			50	131
	489 SHEET TOTAL		SHEET TOTAL	199	305

CALCULATED LAM
CHECKED LMO

CROSS SECTIONS - RAMP W-S
STA. 801+50.00 TO STA. 802+5.00

S.R. 161/ EITERMAN RD. ROUNDABOUT

\\Akrn04\Data\2013\2013945\UNI\80748\roadway\sheets\80748XS003.dgn

SEEDING			END AREA		VOLUME	
END WIDTH	SQ. YDS.		CUT	FILL	CUT	FILL
0		= STA. 803+61.23 AHEAD	STA. 803+61.23 AHEAD =	0	0	
27		= STA. 803+61.23 BACK	STA. 803+61.23 BACK =	43	0	
	231				96	17
41				42	15	
	222				82	37
	453	SHEET TOTAL	SHEET TOTAL		178	54

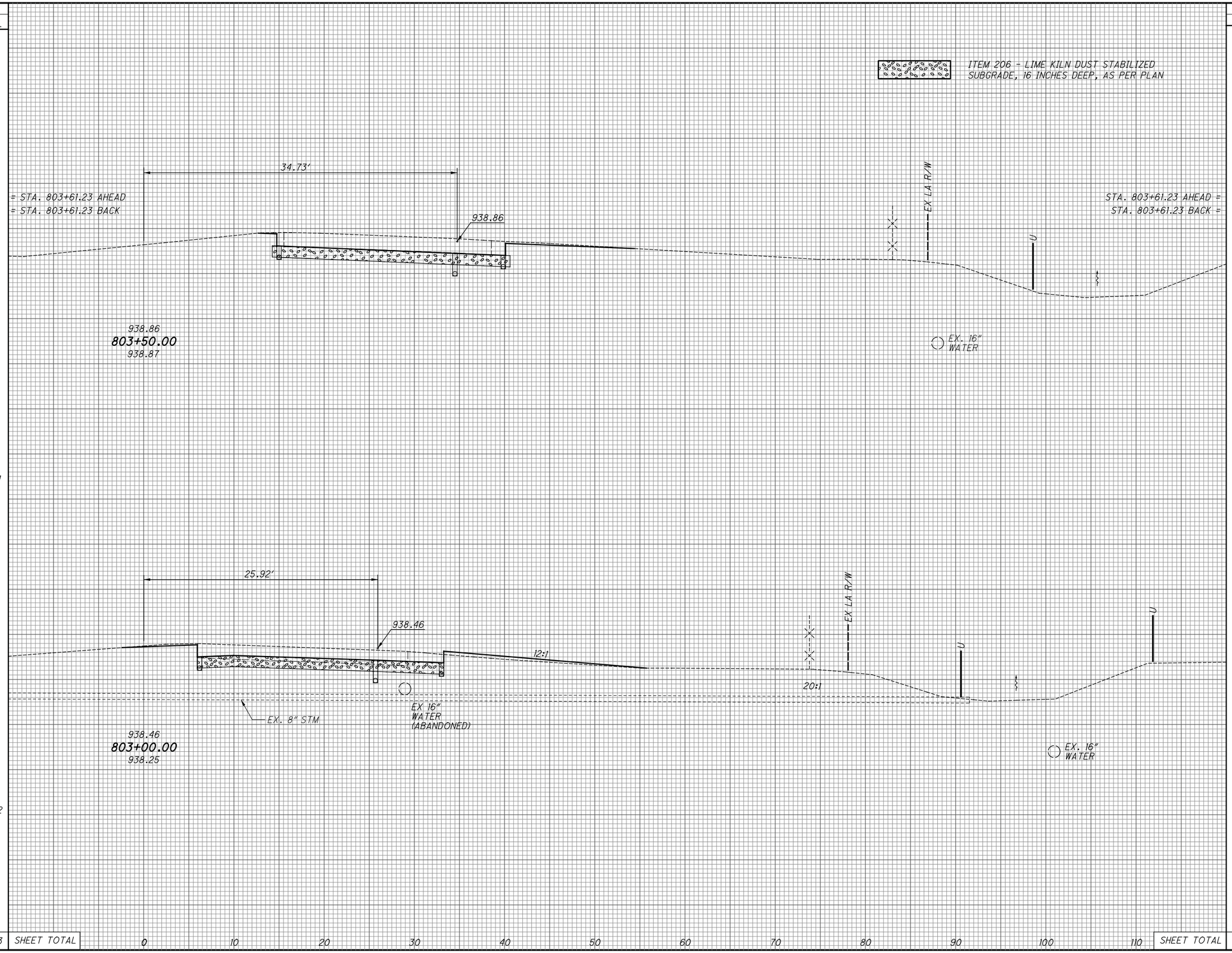

CALCULATED LAM
CHECKED LMO

CROSS SECTIONS - RAMP W-S
STA. 803+00.00 TO STA. 803+50.00

S.R. 161/ EITERMAN RD. ROUNDABOUT

\\Akrn04\Data\2013\2013945\UNI\80748\roadway\sheets\80748XS003.dgn

SEEDING END WIDTH	SEEDING SQ. YDS.		END AREA CUT	END AREA FILL	VOLUME CUT	VOLUME FILL
46	261	940.08 101+00.00 940.38	78	15	119	35
48	204	940.43 100+50.00 940.43	51	23	66	23
54	465	940.35 100+14.00 940.35 BEGIN WORK	48	12	185	58
0	SHEET TOTAL		0	0	SHEET TOTAL	

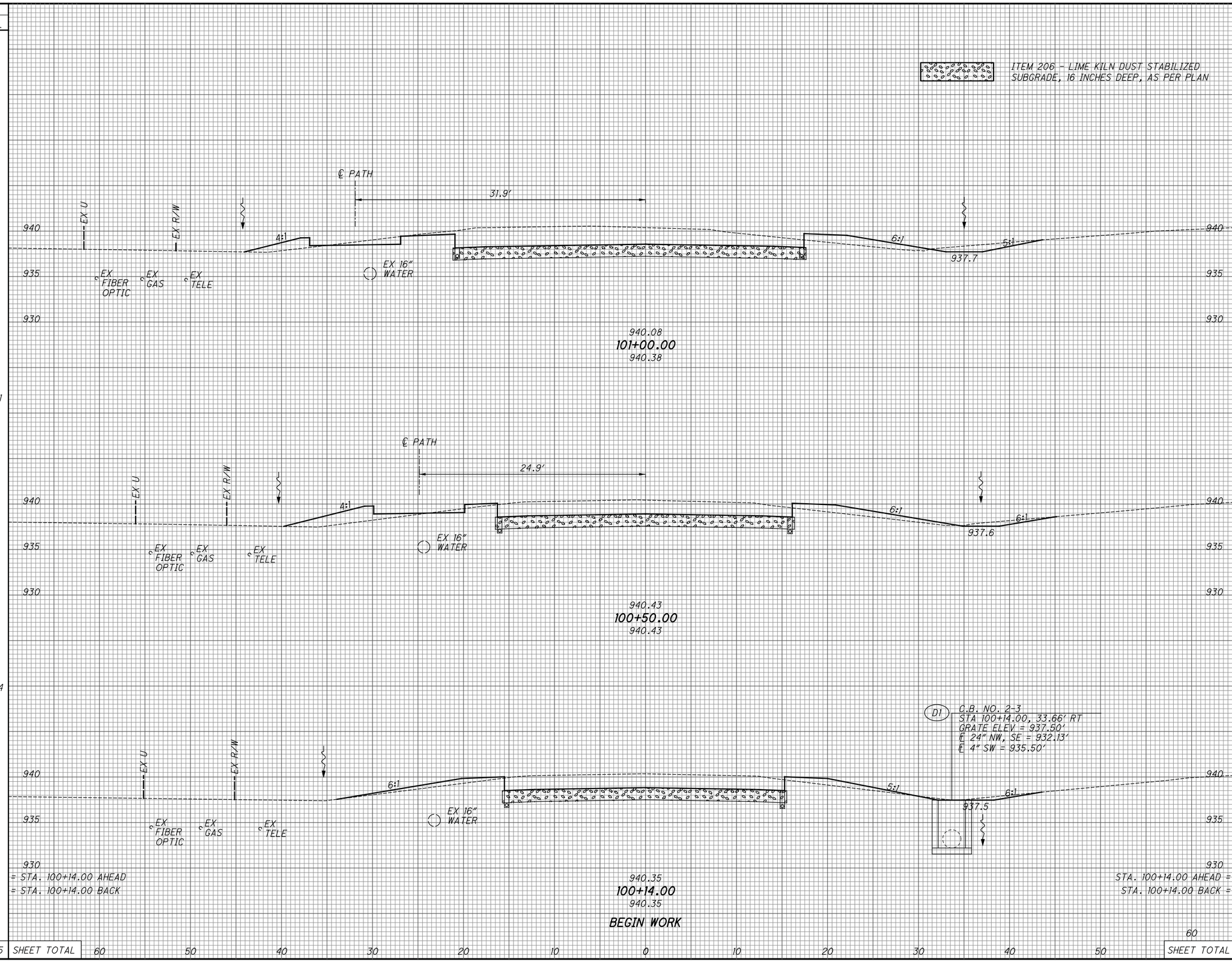

CALCULATED LAM
CHECKED LMO

CROSS SECTIONS - EITERMAN ROAD
STA. 100+14.00 TO STA. 101+00.00

S.R. 161/ EITERMAN RD. ROUNDABOUT

\\Akrn04\Data\2013\2013945\UNI\80748\roadway\sheets\80748XS002.dgn

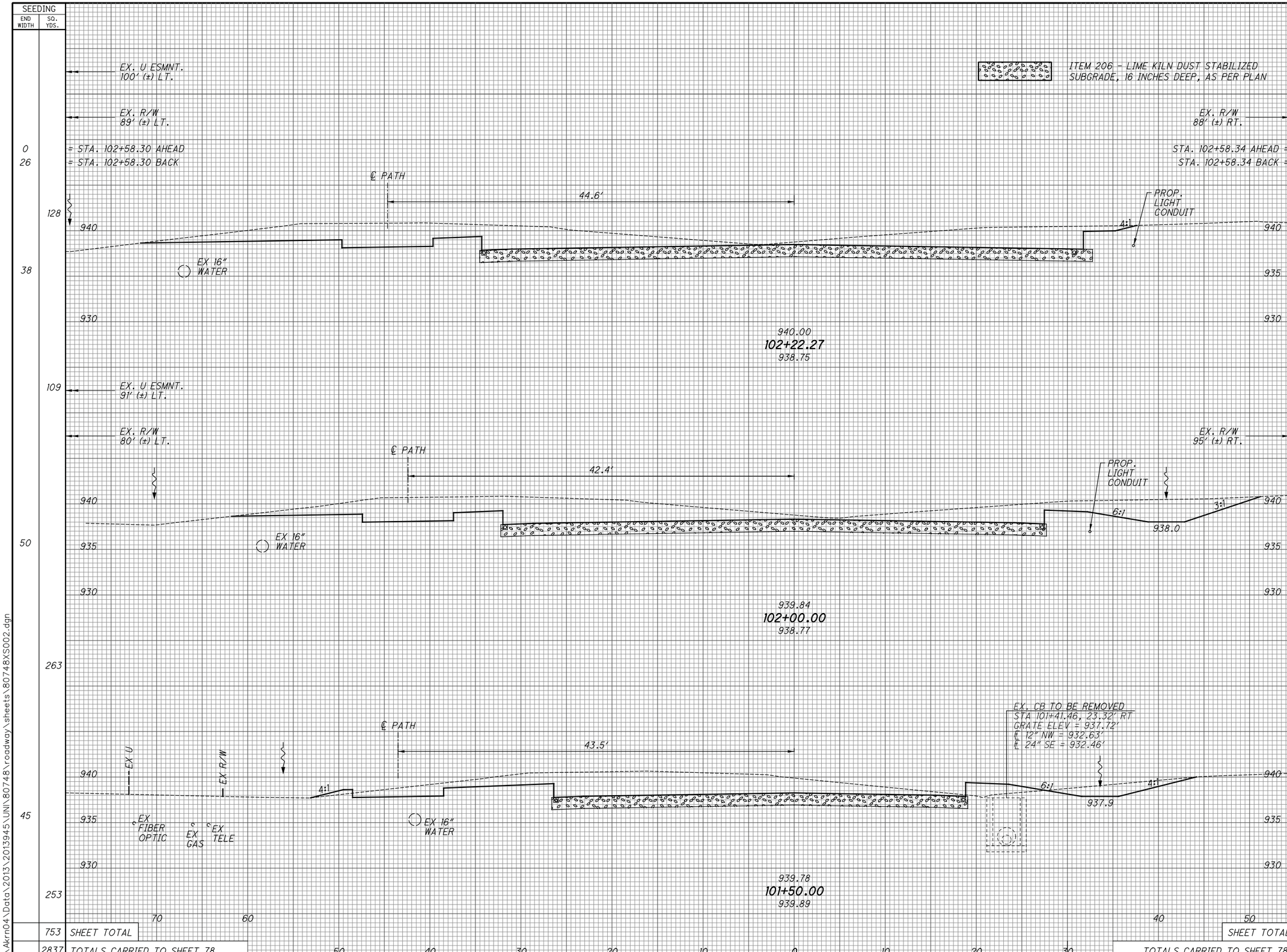

CALCULATED LAM
CHECKED LMO

CROSS SECTIONS - EITERMAN ROAD
STA. 101+50.00 TO STA. 102+22.27

S.R. 161/ EITERMAN RD. ROUNDABOUT

\\Akrn04\Data\2013\2013945\UNI\80748\roadway\sheets\80748XS002.dgn

CROSS REFERENCES	
SHEET NO.	DESCRIPTION
3	ROUNDABOUT GEOMETRY
73	SPLITTER ISLAND DETAILS
74	EXTERIOR TRUCK APRON DETAILS
75	RAMP W-S DETAILS
57 - 59	℞ PROFILES
76	WALKING PATH DETAILS
77	ACCESS DRIVE DETAILS
79 - 80	DRAINAGE DETAILS

NOTES:

1. UNLESS OTHERWISE NOTED, ALL ELEVATIONS SHOWN AT 10' INTERVALS ALONG THEIR RESPECTIVE REFERENCE LINES.
2. ALL ELEVATIONS SHOWN ARE EDGE OF PAVEMENT ELEVATIONS.
3. FOR TOP OF CURB ELEVATIONS, ADD THE FOLLOWING:
   - 4" FOR COMBINATION CURB AND GUTTER, TYPE 2, APP
   - 6" FOR CURB, TYPE 6 (SPLITTER ISLAND)
   - 4" CURB, TYPE 4-C, APP. (CENTRAL ISLAND TRUCK APRON)
   - 2" FOR COMBINATION CURB AND GUTTER , TYPE 3, APP (EXTERIOR TRUCK APRON)
   - 6¼" FOR CURB, TYPE 6, APP (MEDIAN)

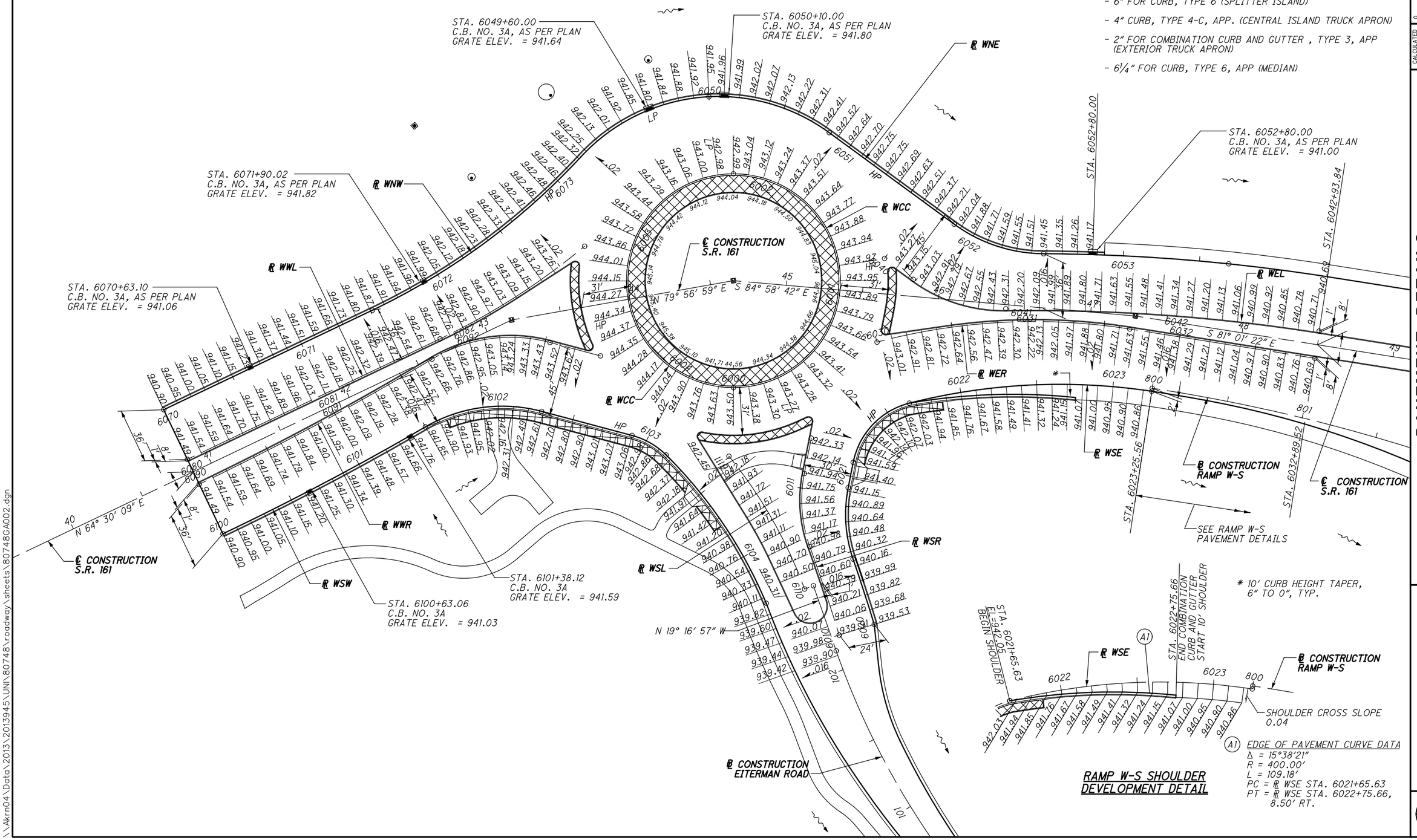

HORIZONTAL SCALE IN FEET
0 15 30 60

CALCULATED LAM
CHECKED LMO

PAVEMENT DETAILS ROUNDABOUT

S.R. 161/ EITERMAN RD. ROUNDABOUT

\\Akrn04\Data\2013\2013945\UNI\80748\roadway\sheets\80748GA002.dgn

CROSS REFERENCES	
SHEET NO.	DESCRIPTION
3	ROUNDABOUT GEOMETRY
72	OVERALL ROUNDABOUT DETAIL

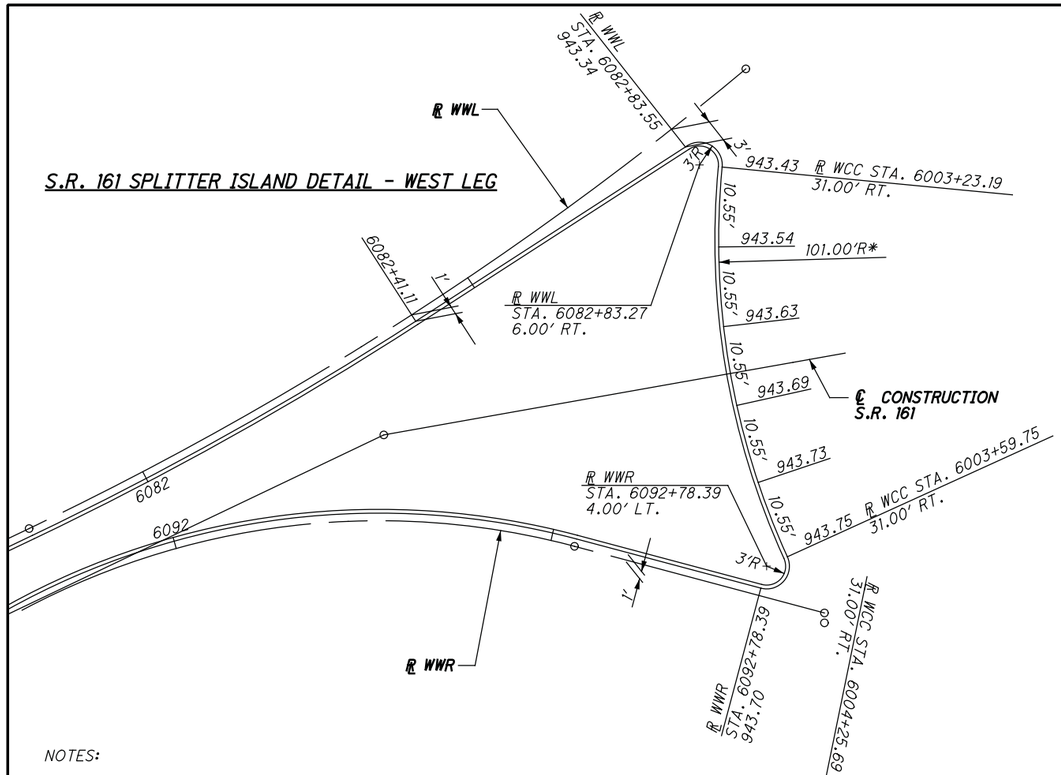

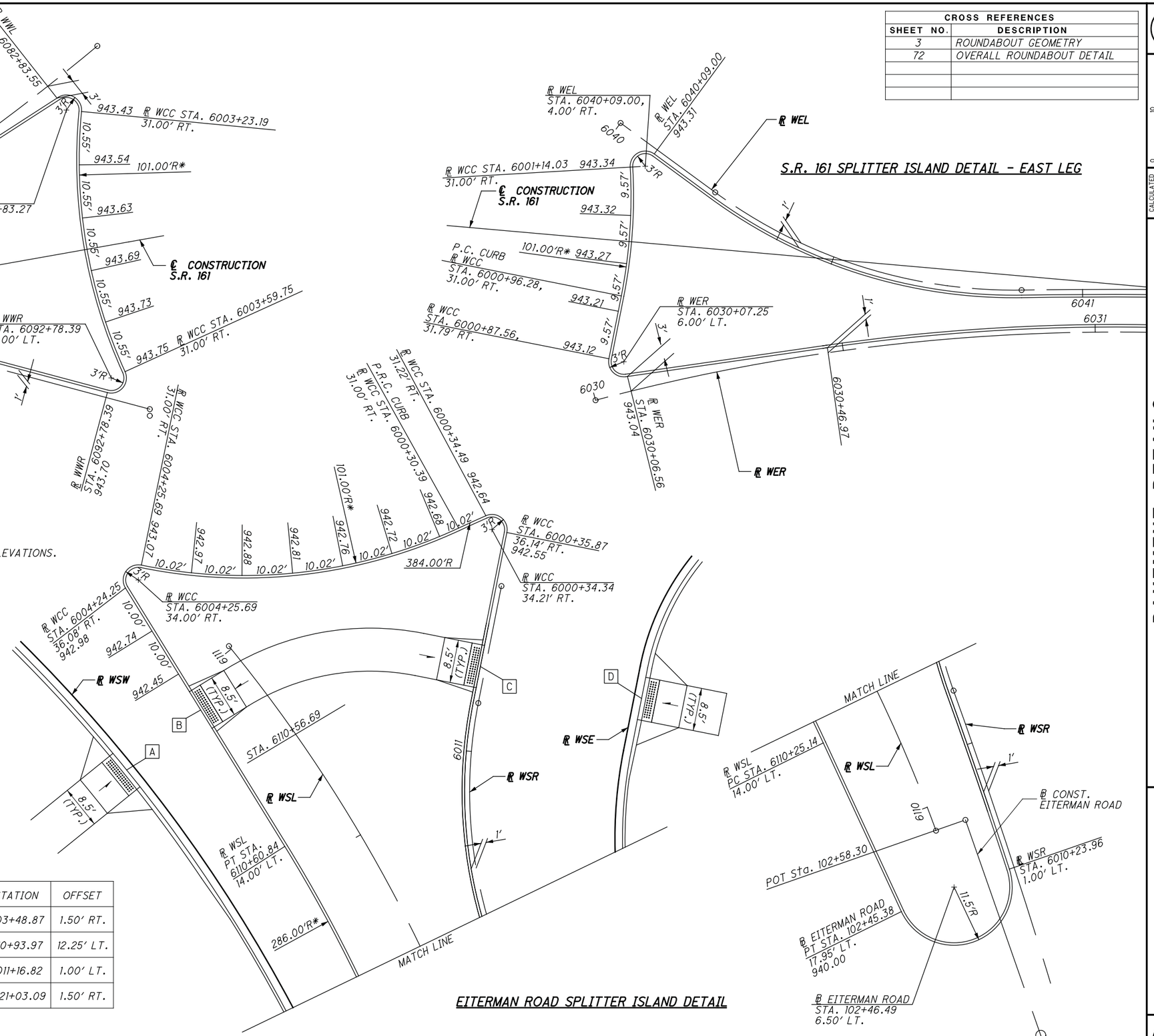

NOTES:

1. ALL ELEVATIONS SHOWN ARE EDGE OF PAVEMENT ELEVATIONS.
2. ADD 6" TO EDGE OF PAVEMENT ELEVATIONS FOR TOP OF CURB ELEVATIONS.

* RADIUS BASED ON CENTER OF ROUNDABOUT (℞ WCC)

℄ CURB RAMP LOCATIONS

ID	RAMP TYPE	NORTHING	EASTING	℞	STATION	OFFSET
A	TYPE B (PD-05)	769187.50	1777441.76	REF "WSW"	6103+48.87	1.50' RT.
B	TYPE H (PD-11)	769199.36	1777456.40	REF "WSL"	6110+93.97	12.25' LT.
C	TYPE H (PD-11)	769207.96	1777511.72	REF "WSR"	6011+16.82	1.00' LT.
D	TYPE B (PD-05)	769201.65	1777543.60	REF "WSE"	6021+03.09	1.50' RT.

RAMP LOCATION IS CENTERLINE OF RAMP AT FACE OF CURB.

HORIZONTAL SCALE IN FEET 0 5 10 20

CALCULATED LAM
CHECKED LMO

PAVEMENT DETAILS
ROUNDABOUT

S.R. 161/EITERMAN RD.
ROUNDABOUT

\\Akrn04\Data\2013\2013945\UNI\80748\roadway\sheets\80748GA003.dgn

S.R. 161 (WEST LEG) AND EITERMAN ROAD EXTERIOR TRUCK APRON DETAIL

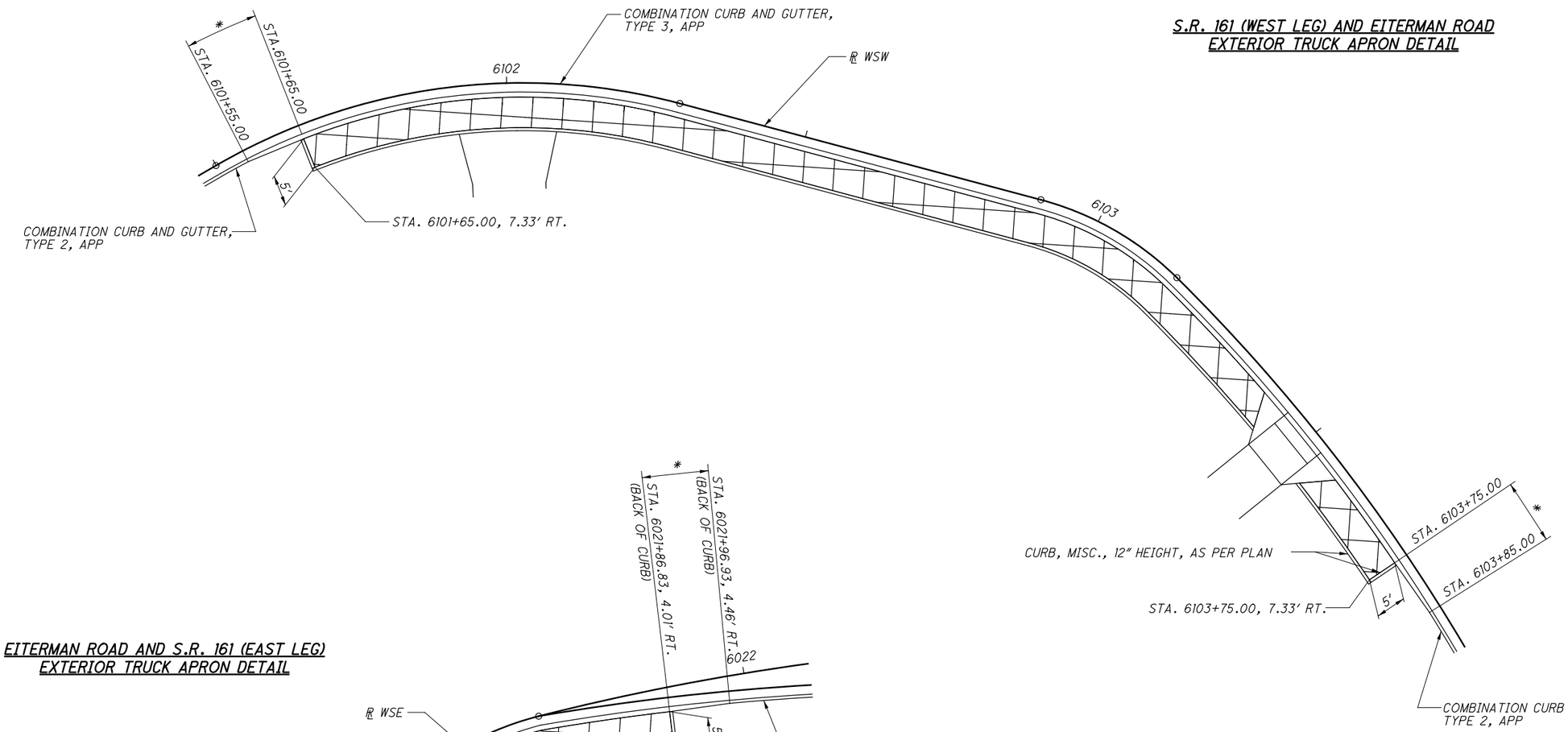

EITERMAN ROAD AND S.R. 161 (EAST LEG) EXTERIOR TRUCK APRON DETAIL

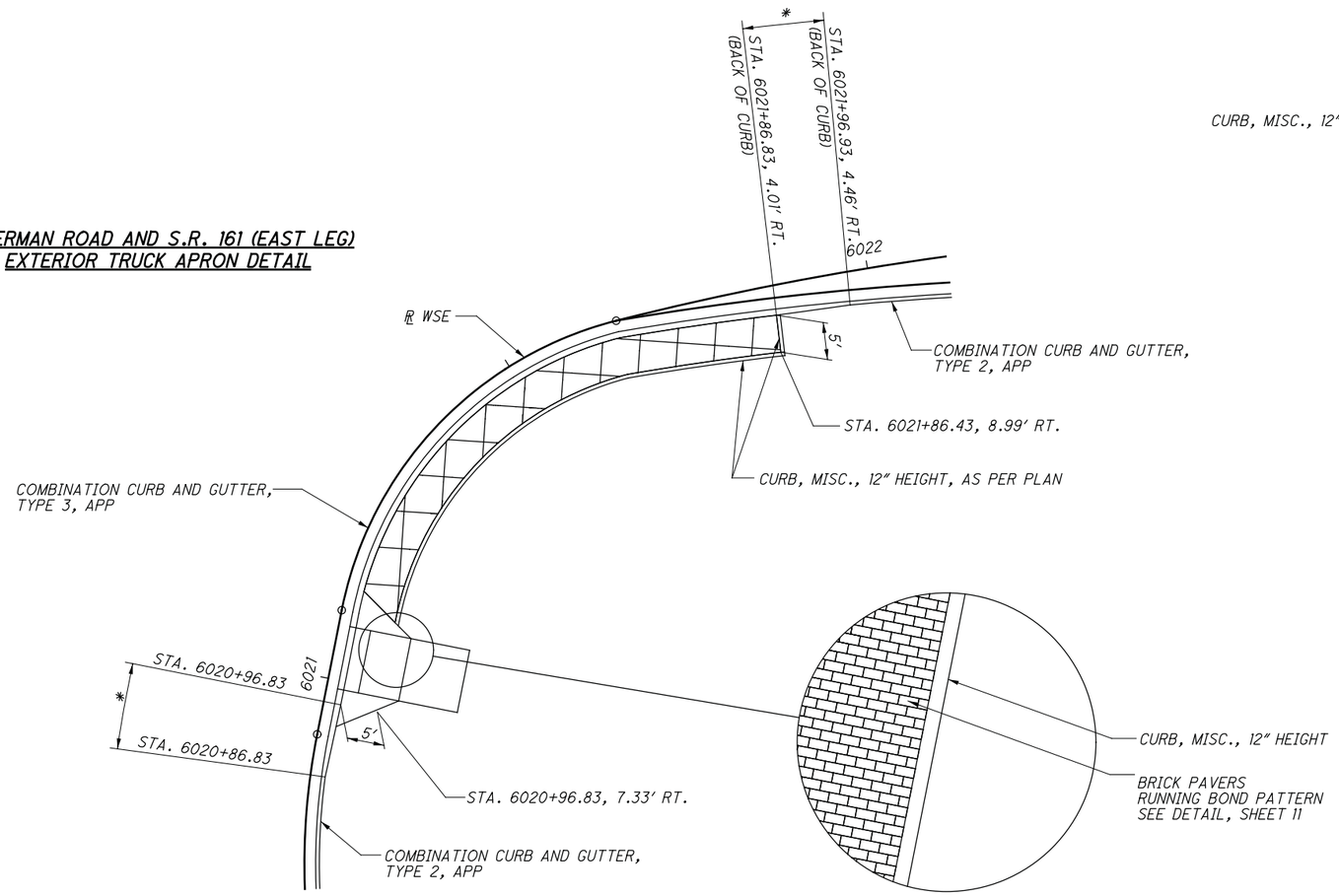

CROSS REFERENCES	
SHEET NO.	DESCRIPTION
3	ROUNDABOUT GEOMETRY
72	OVERALL ROUNDABOUT DETAILS

* 10' COMBINATION CURB AND GUTTER TRANSITION

HORIZONTAL SCALE IN FEET 0 5 10 20

CALCULATED LAM
CHECKED LMO

PAVEMENT DETAILS ROUNDABOUT

S.R. 161/ EITERMAN RD. ROUNDABOUT

\\Akrn04\Data\2013\2013945\UNI\80748\roadway\sheets\80748GA004.dgn

NOTES:

1. UNLESS OTHERWISE NOTED, ALL ELEVATIONS SHOWN AT 25′ INTERVALS ALONG ℄ CONSTRUCTION S.R. 161.
2. RAMP RIGHT-SIDE SHOULDER CROSS SLOPE IS 0.040. WHERE RAMP TRAVELED WAY CROSS SLOPE EXCEEDS 0.040, THE SHOULDER CROSS SLOPE SHALL MATCH RAMP TRAVELED WAY CROSS SLOPE.
3. S.R. 161 CROSS SLOPE IS 0.016 THROUGH THE RAMP TERMINAL AREA.

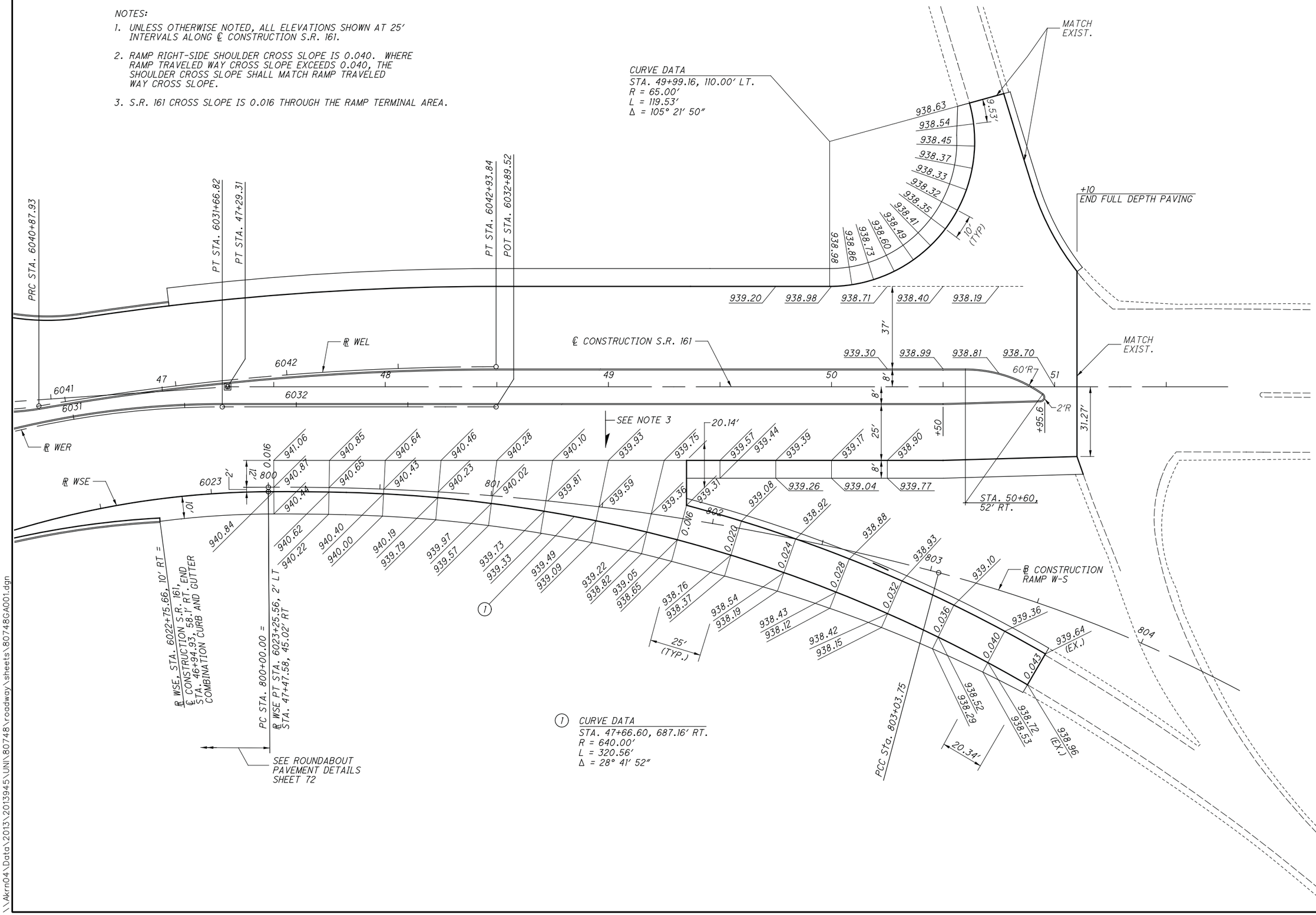

HORIZONTAL SCALE IN FEET

CALCULATED LAM
CHECKED LMO

PAVEMENT DETAILS
S.R. 161 / RAMP W-S

S.R. 161/ EITERMAN RD. ROUNDABOUT

\\Akrn04\Data\2013\2013945\UNI\80748\roadway\sheets\80748GA001.dgn

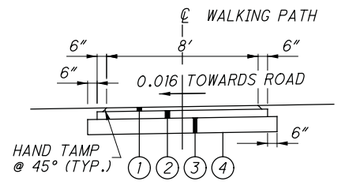

WALKING PATH TYPICAL SECTION

LEGEND

1. ITEM 448 - 1 1/2″ ASPHALT CONCRETE SURFACE COURSE, TYPE 1, PG64-22, AS PER PLAN
2. ITEM 301 - 3″ ASPHALT CONCRETE BASE, PG64-22
3. ITEM 304 - 6″ AGGREGATE BASE
4. ITEM 204 - SUBGRADE COMPACTION

CROSS REFERENCES	
SHEET NO.	DESCRIPTION
3	ROUNDABOUT GEOMETRY
55 - 61	PLAN & PROFILES ROUNDABOUT

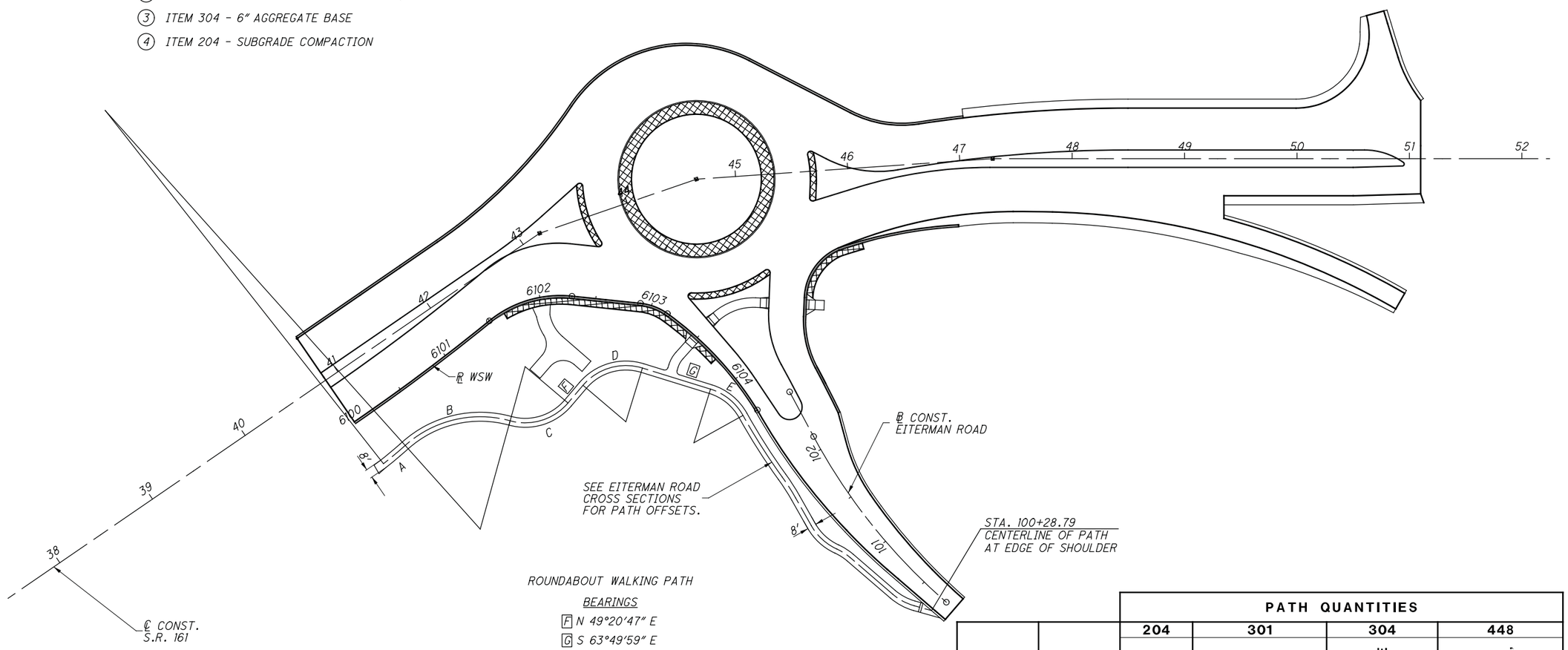

ROUNDABOUT WALKING PATH

BEARINGS

F N 49°20′47″ E

G S 63°49′59″ E

REF. LINE	CURVE NAME	CENTER STATION	NORTHING	EASTING	DELTA	TANGENT LENGTH (FT.)	LENGTH (FT.)	RADIUS (FT.)	CURVE BEGIN STATION	OFFSET	CURVE END STATION	OFFSET
S.R. 161	A	40+60.93	769,469.42	1,776,955.01	3°37′06″	12.63	25.26	400	PC 40+87.16	90.33′ RT	PT 41+12.30	87.88′ RT
WSW	B	6100+35.49	769,049.49	1,777,226.42	57°17′45″	54.63	100.00	100	PC 6100+24.82	43.05′ RT	PT 6101+09.97	81.10′ RT
WSW	C	6101+48.98	769,186.07	1,777,288.43	65°4′25″	31.90	56.79	50	PC 6101+09.97	81.10′ RT	PT 6102+34.99	94.86′ RT
WSW	D	6103+54.79	769,123.66	1,777,369.24	66°49′15″	32.98	58.31	50	PC 6102+46.66	77.83′ RT	PT 6103+28.26	52.07′ RT
WSW	E	6104+27.71	769,095.71	1,777,426.12	43°43′58″	20.07	38.16	50	PC 6103+92.90	23.07′ RT	PT 6104+31.22	13.38′ RT

PATH LENGTH (L)	PATH AREA (A)	PATH QUANTITIES			
		204	301	304	448
		SUBGRADE COMPACTION	ASPHALT CONCRETE BASE, PG64-22	AGGREGATE BASE	ASPHALT CONCRETE SURFACE COURSE, TYPE 1, PG64-22
FT	SF	SY	TON	CY	TON
650	5222	(A+2L)/9	2 * [(3/12)*(A+1L)]/27	[(6/12)*(A+2L)]/27	2 * [(1.5/12)*A]/27
TOTALS CARRIED TO GENERAL SUMMARY		725	110	121	48

HORIZONTAL SCALE IN FEET 0 25 50 100

CALCULATED LAM
CHECKED LMO

WALKING PATH DETAILS

S.R. 161/EITERMAN RD. ROUNDABOUT

\\Akrn04\Data\2013\2013945\UNI\80748\roadway\sheets\80748GM001.dgn

QUANTITIES	LENGTH L (FT)	WIDTH W (FT)	AREA A = L x W (SF)	PLANIMETERED AREA A (SF)	204 SUBGRADE COMPACTION A/9 SY	301 4½" ASPHALT CONCRETE BASE, PG 64-22 (DRIVEWAYS) 2*A*0.375/27 TON	304 6" AGGREGATE BASE A*0.5/27 CY	448 1½" ASPHALT CONCRETE SURFACE COURSE, TYPE 1, PG64-22 (DRIVEWAYS) 2*A*0.125/27 TON
STATION TO STATION								
100+00.00 - 100+16.48				119.8	13.3	3.4	2.2	1.2
100+16.48 - 100+77.00	60.5	12	726		80.7	20.2	13.4	6.8
200+06.00 - 200+19.72				240.6	26.7	6.6	4.5	2.2
200+19.72 - 200+35.11	15.4	12	184.7		20.5	5.2	3.4	1.8
TOTAL CARRIED TO GENERAL SUMMARY					**141**	**35**	**24**	**12**

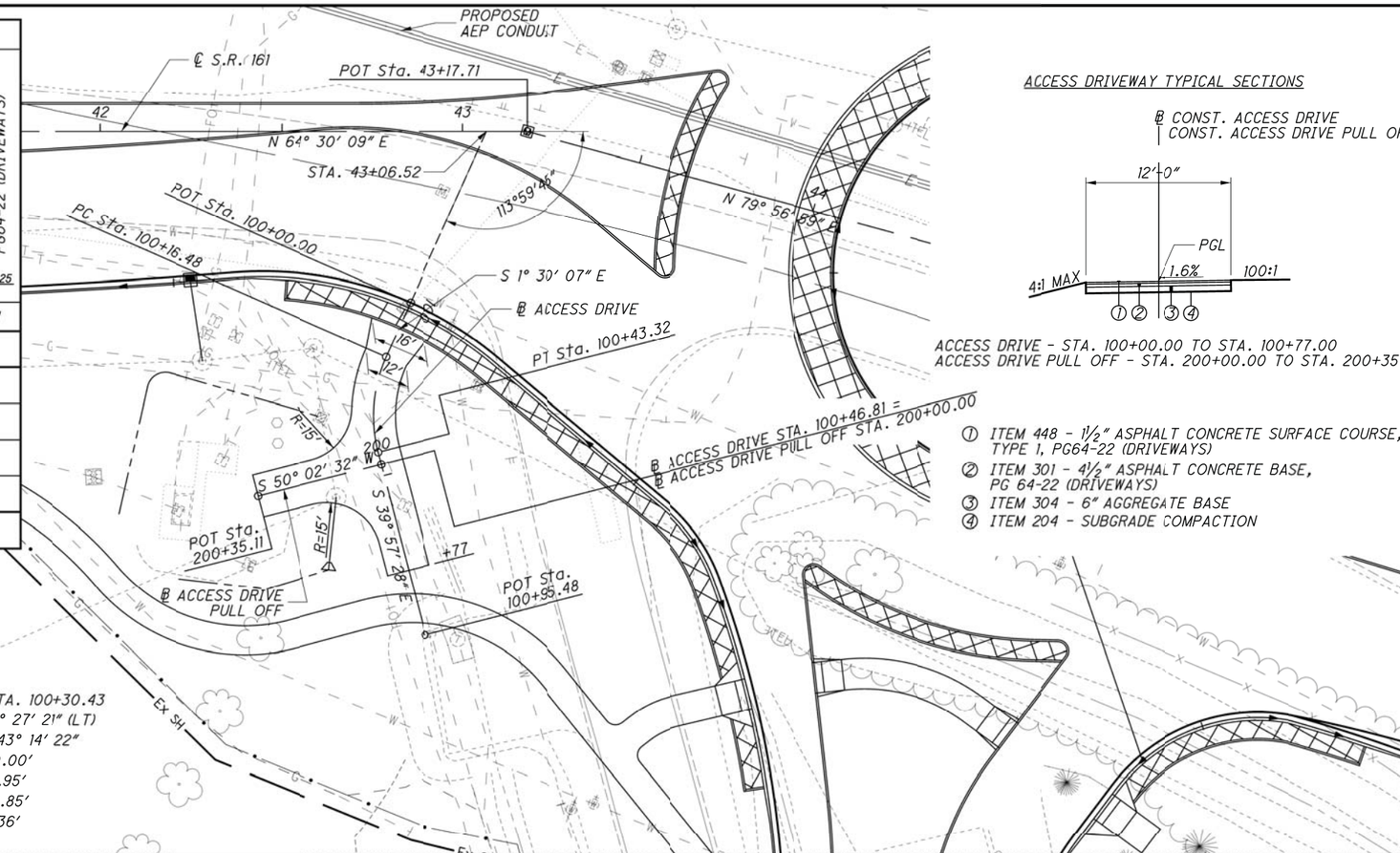

ACCESS DRIVEWAY TYPICAL SECTIONS

ACCESS DRIVE - STA. 100+00.00 TO STA. 100+77.00
ACCESS DRIVE PULL OFF - STA. 200+00.00 TO STA. 200+35.11

① ITEM 448 - 1½" ASPHALT CONCRETE SURFACE COURSE, TYPE 1, PG64-22 (DRIVEWAYS)
② ITEM 301 - 4½" ASPHALT CONCRETE BASE, PG 64-22 (DRIVEWAYS)
③ ITEM 304 - 6" AGGREGATE BASE
④ ITEM 204 - SUBGRADE COMPACTION

P.I. STA. 100+30.43
Δ = 38° 27′ 21″ (LT)
Dc = 143° 14′ 22″
R = 40.00′
T = 13.95′
L = 26.85′
E = 2.36′

CROSS REFERENCES	
SHEET NO.	DESCRIPTION
78	GRADING PLAN
72	ROUNDABOUT PAVEMENT DETAILS
76	WALKING PATH DETAIL
79 -80	DRAINAGE DETAILS

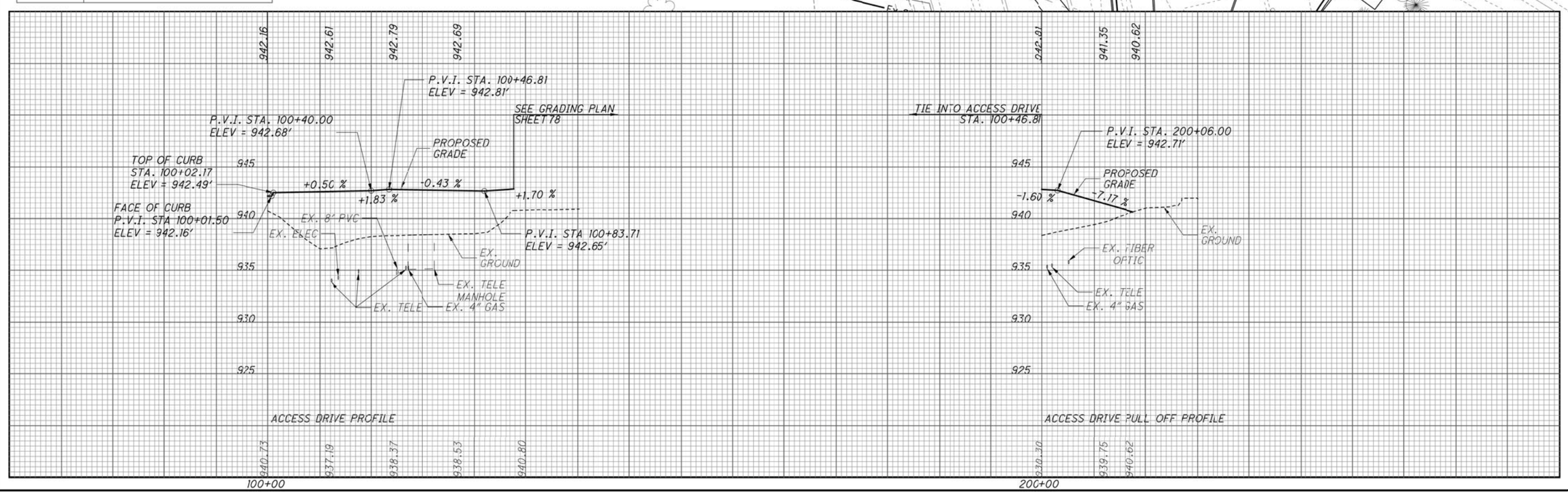

N

HORIZONTAL SCALE IN FEET
0 10 20 40

CALCULATED LAM
CHECKED LMO

PLAN AND PROFILE - ACCESS DRIVE

S.R. 161/EITERMAN RD. ROUNDABOUT

\\Akrn04\Data\2013\2013945\UNI\80748\roadway\sheets\80748GD001.dgn

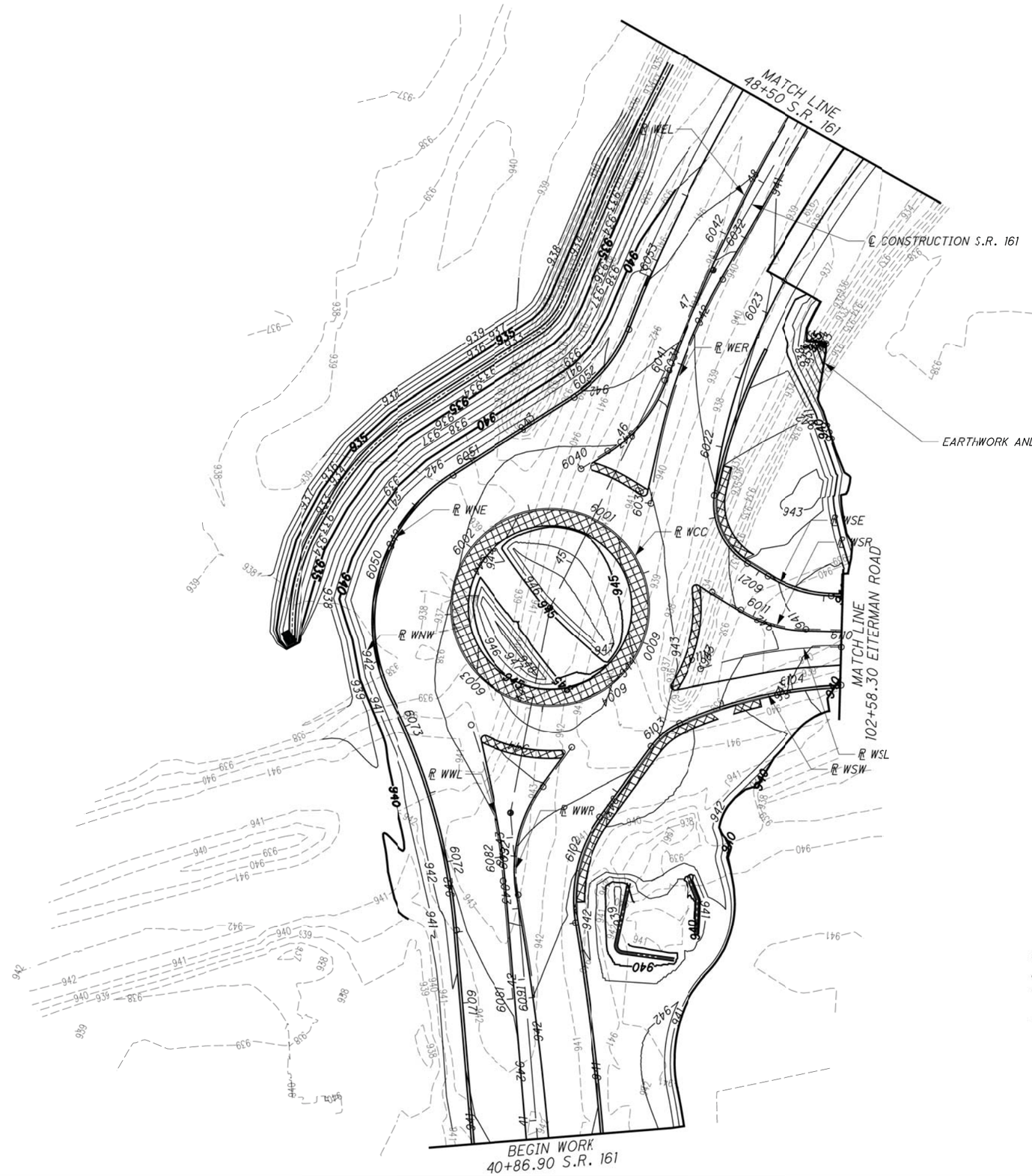

EARTHWORK SUBSUMMARY	203	203	659
	10000	20000	10001
	EXCAVATION	EMBANKMENT	SEEDING AND MULCHING, AS PER PLAN
	CY	CY	SY
GRADING PLAN QUANTITIES	1843	8708	9651
CROSS SECTION QUANTITIES	2629	1080	2837
TOTAL CARRIED TO GENERAL SUMMARY	**4472**	**9788**	**12488**

LEGEND

—935— PROPOSED CONTOURS

- -935- - EXISTING CONTOURS

NOTE: MATCH LINES DENOTE THE LIMITS OF EARTHWORK & GRADING FROM THE CROSS SECTIONS TO THIS GRADING DETAIL. SEE THE APPROPRIATE CROSS SECTIONS FOR GRADING AND EARTHWORK BEYOND THESE LIMITS.

N

0 20 40 80
HORIZONTAL SCALE IN FEET

CALCULATED LAM
CHECKED LMO

GRADING PLAN ROUNDABOUT

S.R. 161/ EITERMAN RD. ROUNDABOUT

\\Akrn04\Data\2013\2013945\UNI\80748\roadway\sheets\80748XG001.dgn

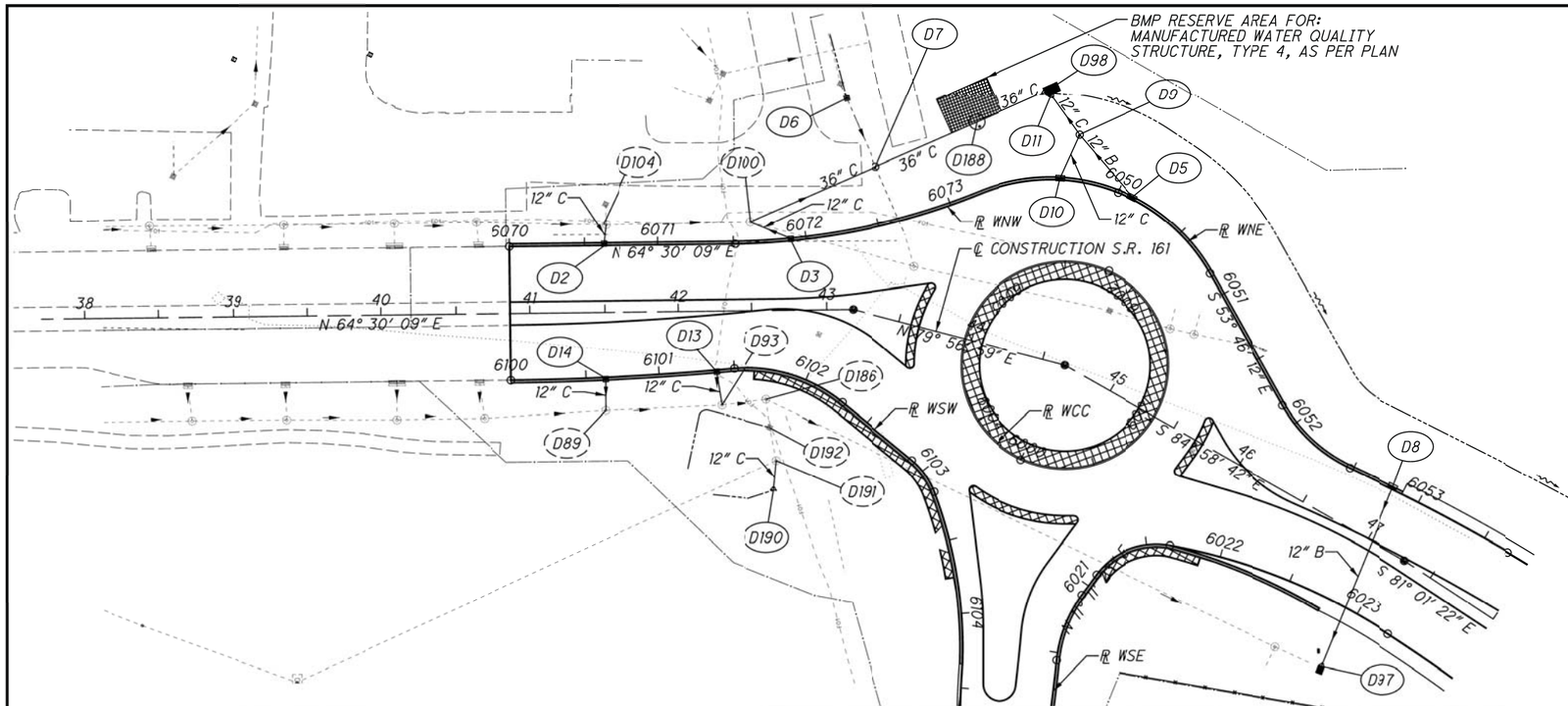

D DRAINAGE ITEMS CONSTRUCTED BY UNI-161-12.98

CROSS REFERENCES	
SHEET NO.	DESCRIPTION
49	DRAINAGE QUANTITIES
55 - 60	S.R. 161 PLAN & PROFILE
80	DRAINAGE DETAILS
72 - 75	ROUNDABOUT PAV'T DETAILS

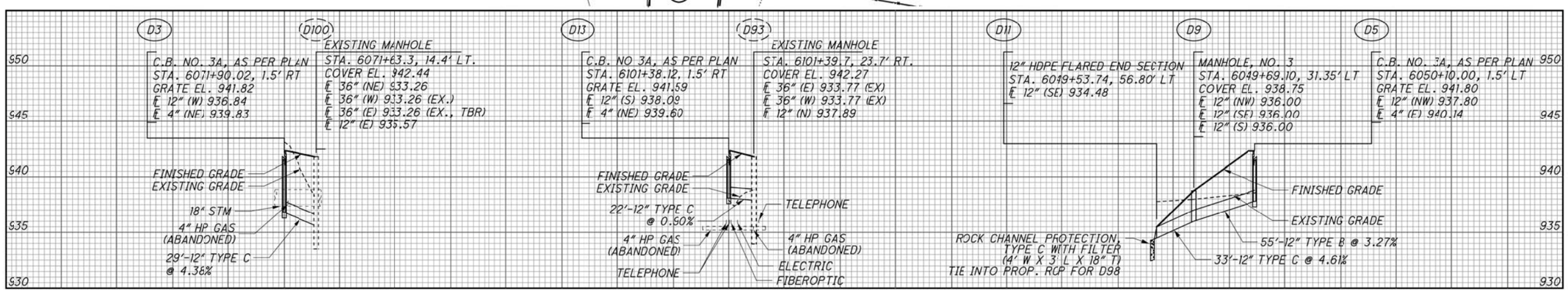

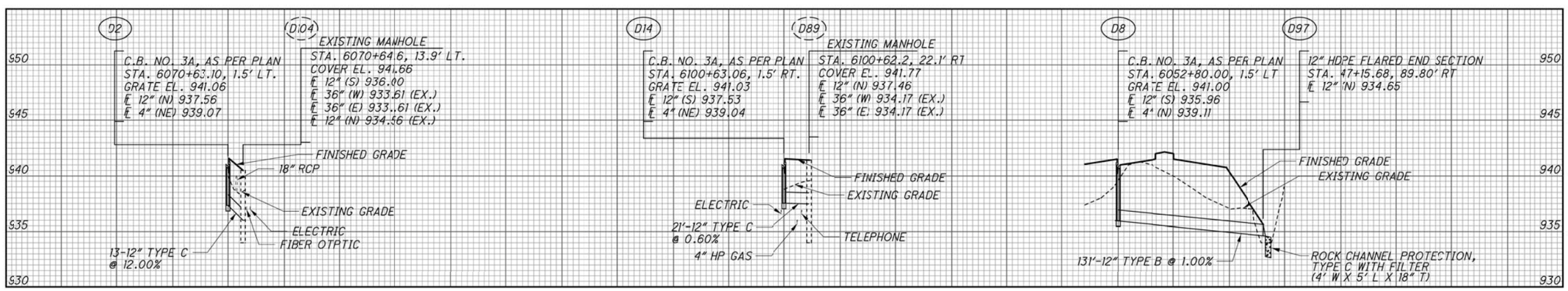

HORIZONTAL SCALE IN FEET
0 25 50 100

CALCULATED LAM
CHECKED LMO

STORM SEWER
ROUNDABOUT

S.R. 161/ EITERMAN RD.
ROUNDABOUT

\\Akrn04\Data\2013\2013945\UNI\80748\roadway\sheets\80748DP001.dgn

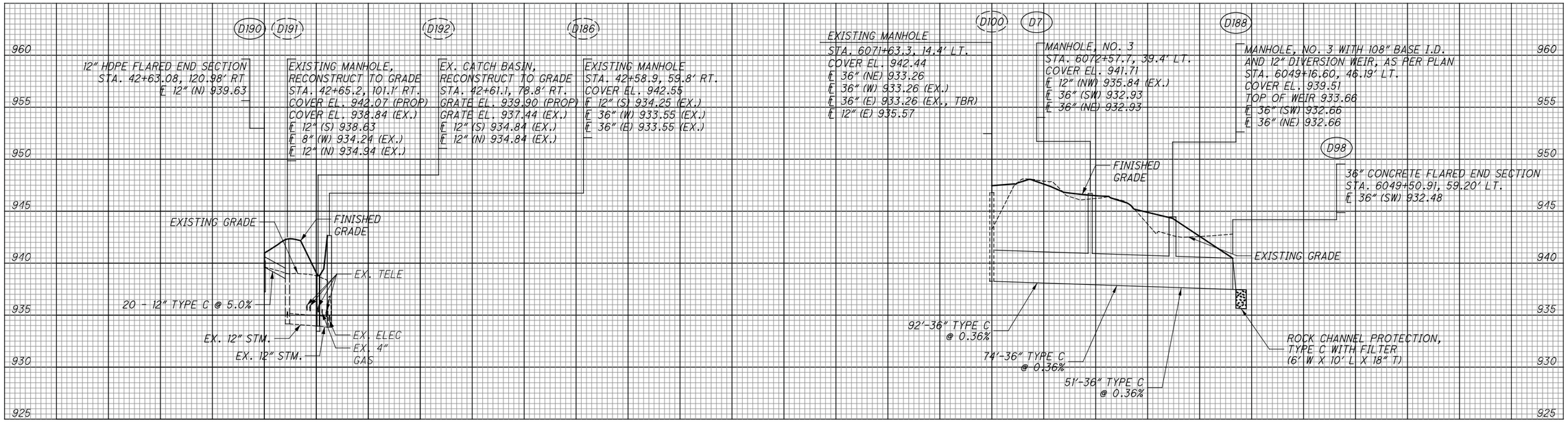

CROSS REFERENCES	
SHEET NO.	DESCRIPTION
49	DRAINAGE QUANTITIES

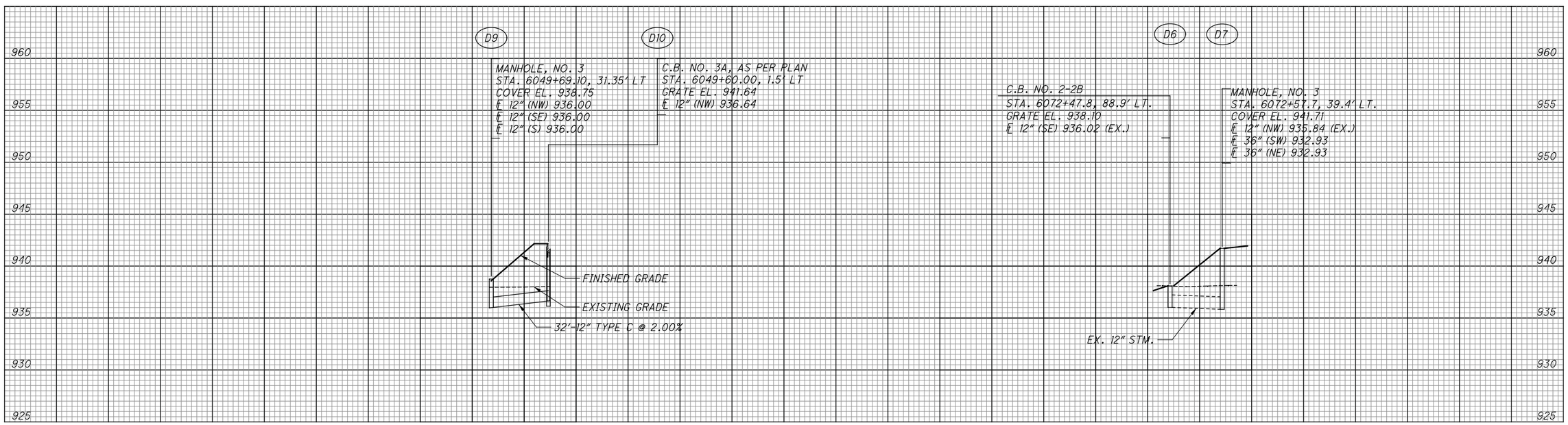

CALCULATED LAM
CHECKED LMO

STORM SEWER PROFILES

S.R. 161/ EITERMAN RD. ROUNDABOUT

\\Akrn04\Data\2013\2013945\UNI\80748\roadway\sheets\80748DF001.dgn

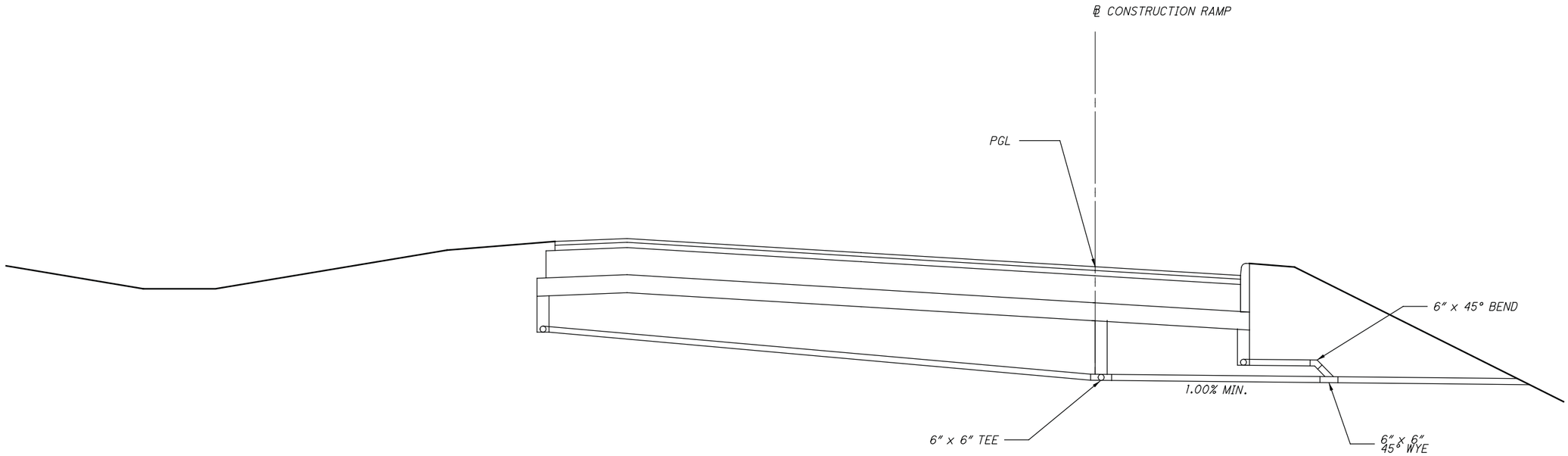

SECTION

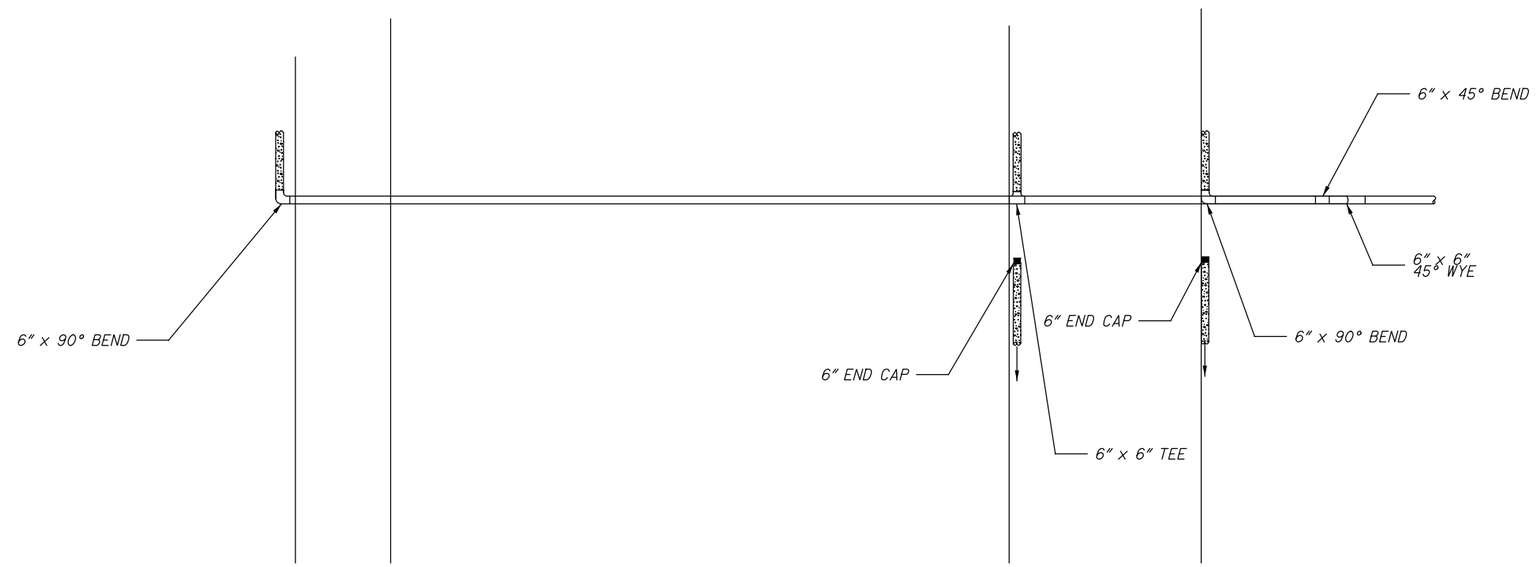

PLAN

UNDERDRAIN OUTLET DETAIL

CALCULATED LAM
CHECKED LMO

UNDERDRAIN DETAILS

S.R. 161/ EITERMAN RD.
ROUNDABOUT

\\Akrn04\Data\2013\2013945\UNI\80748\roadway\sheets\80748DD001.dgn

WATER LINE GENERAL NOTES

WATER MAIN RELOCATION

PART 1 GENERAL

THE CONTRACTOR SHALL NOTIFY THE CITY OF COLUMBUS, DIVISION OF WATER AT (614) 645-7788, THE CITY OF MARYSVILLE UTILITY OFFICE AT 209 SOUTH MAIN STREET, MARYSVILLE, OH 43040, (937) 645-7350, AND THE CITY OF DUBLIN DIVISION OF ENGINEERING AT (614) 410-4631 AT LEAST 24 HOURS BEFORE TAPPING IN TO EXISTING WATER LINES AND AT LEAST TWO WORKING DAYS BEFORE SHUTTING DOWN OF THE WATER MAIN.

STATION AND OFFSETS FOR LOCATION AT PROPOSED WATER MAINS ARE REFERENCED TO THE CONSTRUCTION BASELINE. WATER MAIN CENTERLINE STATIONING IS PROVIDED FOR THE PROFILES.

THE CONTRACTOR SHALL GIVE WRITTEN NOTICE TO ALL AFFECTED PROPERTY OWNERS AT LEAST 1 WORKING DAY BUT NOT MORE THAN 3 WORKING DAYS PRIOR TO ANY TEMPORARY INTERRUPTION OF WATER SERVICE. INTERRUPTION OF SERVICE SHALL BE HELD TO A MINIMUM AND SHALL BE APPROVED BY THE RESPECTIVE CITY ENGINEER.

IF THE TOP OF THE OPERATING NUT OF ANY VALVE IS GREATER THAN 36 INCHES BELOW FINISHED GRADE, AN EXTENSION STEM SHALL BE FURNISHED TO BRING THE TOP OF THE OPERATING NUT TO WITHIN 24 INCHES OF FINISHED GRADE FOR CITY OF COLUMBUS AND 36 INCHES FOR CITY OF MARYSVILLE.

WATER LINES SHALL BE PLACED AT A MINIMUM DEPTH OF 4 FEET 6 INCHES FOR CITY OF MARYSVILLE, MEASURED FROM THE TOP OF FINISHED GRADE TO THE TOP OF WATER LINE, UNLESS OTHERWISE INDICATED ON THE PLANS. WATER LINES SHALL BE SET DEEPER AT ALL POINTS WHERE NECESSARY TO CLEAR EXISTING OR PROPOSED UTILITY LINES OR OTHER UNDERGROUND RESTRICTIONS BY A MINIMUM OF 18 INCHES.

THE CONTRACTOR SHALL COORDINATE HIS WORK SUCH THAT NO WATER CUSTOMER WILL BE WITHOUT WATER MORE THAN TWO TIMES THROUGHOUT THE DURATION OF THIS PROJECT.

PART 2 CITY OF MARYSVILLE 12" WATER MAIN

ALL WATER LINE AND APPURTENANCES, MATERIALS AND INSTALLATION PROCEDURES, SHALL BE IN ACCORDANCE WITH THE CURRENT RULES AND REGULATIONS OF THE CITY OF MARYSVILLE.

ALL WATER LINE MATERIALS AND INSTALLATION PROCEDURES SHALL BE IN ACCORDANCE WITH THE CURRENT RULES AND REGULATIONS OF THE CITY OF MARYSVILLE AND THE AWWA. THE WATER LINE MATERIAL SHALL BE CLEARLY IDENTIFIED AS CONFORMING TO AWWA STANDARDS.

WATER LINE TRENCHES SHALL BE DEWATERED TO 2" BELOW THE BELL OF PIPE PRIOR TO INSTALLATION.

IN CASE OF A CONFLICT IN GRADE BETWEEN STORM SEWERS AND WATER LINE, THE WATER LINE SHALL BE LOWERED.

ALL WATER METERS SHALL BE INSTALLED INSIDE OF THE PROPOSED STRUCTURE, NOT IN A METER PIT, UNLESS SAID METER PIT IS APPROVED BY THE CITY OF MARYSVILLE.

A BRONZE PAD LOCKABLE METER BYPASS BALL VALVE, APOLLO 75-100 SERIES OR EQUAL, IS REQUIRED FOR 1 1/2" AND LARGER METERS.

WATER SERVICE BOXES SHALL BE SET 2 FEET FROM THE EDGE OF SIDEWALK, BETWEEN SIDEWALK AND CURB. WATER SERVICE BOXES ARE NOT PERMITTED IN CONCRETE DRIVEWAYS OR SIDEWALKS.

WATER LINES SHALL HAVE A MINIMUM COVER OF 4 FEET 6 INCHES FROM FINAL GRADE.

CONTRACTORS SHALL PROVIDE MEGALUG RETAINING GLANDS OR APPROVED EQUAL AT ALL BENDS AND TEES.

FIRE HYDRANTS SHALL BE MUELLER COMPANY CENTURION 250 HYDRANT WITH A 4 1/2 MAIN VALVE OPENING.
THEY ARE TO HAVE A THREE WAY UPPER BARREL WITH ONE 4 1/2 INCH PUMPER NOZZLE WITH AN INTEGRAL 5" STORZ CONNECTION INSTALLED, AND TWO 2 1/2 INCH HOSE NOZZLES. MUST MEET AWWA C-502 STANDARDS.

ALL SERVICE LINES SHALL BE TYPE K SOFT COPPER CONFORMING TO ASTM B-88, AND UNDERGROUND JOINTS MUST BE COMPRESSION. DUCTILE IRON SHALL BE USED IF SERVICE EXCEEDS 2 INCHES.

WATER LINE SHALL BE DEFLECTED, PER MANUFACTURER SPECIFICATIONS, TO PROVIDE 1 FT 6 IN VERTICAL AND 10 FT HORIZONTAL CLEARANCE WITH SEWERS. IF THIS IS NOT FEASIBLE, THEN MARYSVILLE STANDARD CONSTRUCTION DRAWINGS NUMBER WTR-18, WTR-20, AND WTR-22 WILL APPLY.

ALL WATER MAINS ARE TO BE SEPERATED 10 FEET HORIZONTALLY AND 1.5 FEET VERTICALLY FROM ALL SEWERS.

IF THE TOP OF THE OPERATING NUT FOR WATER VALVE IS GREATER THAN 36 INCHES BELOW FINISH GRADE, AN EXTENSION STEM SHALL BE FURNISHED TO BRING THE TOP OF THE OPERATING NUT TO 36 INCHES BELOW FINAL GRADE.

TRANSVERSE WATER LINES WITHIN THE PAVEMENT AREA SHALL BE BACKFILLED WITH ODOT 304 COMPACTED GRANULAR MATERIAL OR COM LSM 185, LOW STRENGTH MORTAR, (LSM), TO THREE FEET BEYOND THE FACE OF CURB OR EDGE OF PAVEMENT.

PRESSURE TESTING WILL BE IN ACCORDANCE WITH AWWA C-600, AS DESCRIBED IN CITY OF MARYSVILLE WATER DIVISION SPECIFICATION, SECTION XII.

ALL WATER MAINS SHALL BE DISINFECTED IN ACCORDANCE WITH AWWA C-651 AND THE CITY OF MARYSVILLE WATER DIVISION SPECIFICATIONS.

INDIVIDUAL BOOSTER PUMPS WILL NOT BE ALLOWED FOR ANY INDIVIDUAL SERVICE. (OHIO ADMINISTRATIVE CODE RULE 3745-95-07(A))

THE NORMAL WORKING PRESSURE IN THE WATERLINE WILL NOT BE LESS THAN 35 PSI. (2003 RECOMMENDED STANDARDS FOR WATER WORKS, PRESSURE, SECTION 8.2.1)

BACKFILL OPERATIONS SHALL CONFORM TO STANDARD CONSTRUCTION DRAWINGS WTR-24 AND WTR-25, AS WELL AS THE FOLLOWING (3) STANDARDS:

1. TRENCHES OUTSIDE OF THE INFLUENCE OF STREETS SHALL REQUIRE 95% OF MAXIMUM DRY LABORATORY WEIGHT AT ±2% OF OPTIMUM MOISTURE. MATERIAL SHALL BE PER ODOT 203.07 AND SUPPLEMENTAL SPECIFICATION 1015.

2. STORM, SANITARY, AND UTILITY TRENCHES WITHIN 3 FEET OF THE EDGE OF PAVEMENT AND WITHIN THE CONE OF INFLUENCE SHALL REQUIRE 98% OF THE MAXIMUM DRY LABORATORY WEIGHT AT ±2% OPTIMUM MOISTURE. BACKFILL MATERIAL SHALL BE ODOT 304 AGGREGATE OR COM LSM 185, LOW STRENGTH MORTAR (LSM). WHERE SAID RESULTS INDICATE THE TRENCH BACKFILL DOES NOT MEET THE COMPACTION REQUIREMENTS OF ODOT 203.07 OF THE CONSTRUCTION AND MATERIALS SPECIFICATION, ALL BACKFILL SHALL BE REMOVED AND RETESTED UNTIL COMPACTION MEETS THE REQUIREMENTS OF 203.07. CONE OF INFLUENCE TO BEGIN 3 FEET FROM THE EDGE OF PAVEMENT AND EXTEND ONE FOOT IN DISTANCE FOR EVERY ONE FOOT OF DEPTH.

3. STORM, SANITARY, AND UTILITY TRENCHES UNDER ROAD PAVEMENT SHALL REQUIRE 98% OF THE MAXIMUM DRY LABORATORY WEIGHT AT ±1.5% OPTIMUM MOISTURE. BACKFILL MATERIAL SHALL BE ODOT 304 AGGREGATE OR COM LSM 185, LOW STRENGTH MORTAR (LSM). BACKFILL TO BEGIN 3 FEET FROM EDGE OF PAVEMENT AND EXTEND ONE FOOT IN DISTANCE FOR EVERY ONE FOOT OF DEPTH. WHERE SAID RESULTS INDICATE THE TRENCH BACKFILL DOES NOT MEET THE COMPACTION REQUIREMENTS OF ODOT 203.07 OF THE CONSTRUCTION AND MATERIALS SPECIFICATION, ALL BACKFILL SHALL BE REMOVED AND RETESTED UNTIL COMPACTION MEETS THE REQUIREMENTS OF 203.07.

ITEM 638 - WATER WORK, MISC.: 12" DUCTILE IRON PIPE AND FITTINGS

PIPE SHALL MEET THE CURRENT SPECIFICATION FOR DUCTILE IRON PIPE AND FITTINGS AS PROVIDED IN THE CITY OF MARYSVILLE WATER DIVISION SPECIFICATIONS. WORK SHALL BE IN ACCORDANCE WITH THE CITY OF MARYSVILLE STANDARD CONSTRUCTION DRAWINGS, INCLUDING WTR-18, WTR-19, WTR-20, WTR-22 AND WTR-25.

PAYMENT FOR THIS WORK SHALL INCLUDE ALL LABOR, MATERIAL, EQUIPMENT, AND INCIDENTALS IN THE UNIT PRICE BID FOR EXCAVATING THE TRENCH, FURNISHING AND LAYING OF THE PIPE, PLACEMENT OF CONCRETE THRUST BLOCKS, BACK-FILLING, HYDROSTATIC TESTING, AND DISINFECTING TO COMPLETE THE WORK AND HAVE READY FOR SERVICE.

ITEM 638 - WATER WORK, MISC.: 12" VALVE AND APPURTENANCES

ALL VALVES AND APPURTENANCES SHALL MEET THE CURRENT SPECIFICATIONS SET FORTH IN THE CITY OF MARYSVILLE WATER DIVISION SPECIFICATIONS.

THE PAYMENT FOR ALL WORK PERFORMED UNDER THIS ITEM SHALL BE AT THE UNIT PRICE BID PER EACH WHICH SHALL INCLUDE ALL LABOR, MATERIAL, EQUIPMENT, AND INCIDENTALS TO FURNISH AND INSTALL THE VARIOUS TYPES AND SIZES OF VALVES SPECIFIED INCLUDING OPERATION EXTENSION STEMS, CONCRETE VALVE SUPPORTS AND VALVE BOXES.

ITEM 638 - WATER WORK, MISC.: 20" STEEL CASING PIPE (OPEN TRENCH)

THE ENCASEMENT PIPE SHALL MEET THE CURRENT REQUIREMENTS SET FORTH IN THE CITY OF MARYSVILLE WATER DIVISION SPECIFICATIONS AND STANDARD CONSTRUCTION DRAWING WTR-17, AS WELL AS ANY REQUIREMENTS OF ALL PRIVATE OR PUBLIC AUTHORITIES INVOLVED.

PAYMENT SHALL BE MADE AT THE UNIT PRICE BID PER LINEAR FOOT WHICH PRICE SHALL INCLUDE ALL MATERIAL, EQUIPMENT, LABOR, INCLUDING EXCAVATING, PUMPING, TUNNEL PLUGGING, GROUTING, COMPACTED BACKFILL, CONCRETE SUPPORTS, PITS AND OPENINGS, AND TWO (2) SETS OF AS-BUILT PLANS UPON COMPLETION OF THE JOB PROVIDED TO THE CITY OF MARYSVILLE WATER DIVISION.

ITEM 638 - WATER WORK, MISC.: CUT AND PLUG 12" WATER MAIN

THE CONTRACTOR SHALL NOTIFY ALL WATER CUSTOMERS AFFECTED BY A WATER SHUTDOWN AT LEAST 24 HOURS IN ADVANCE. TRANSFER ALL AFFECTED WATER SERVICES AND SHUT THE EXISTING WATERLINE DOWN FOR 24 HOURS BEFORE CUTTING AND PLUGGING THE LINE.

CUT THE EXISTING PIPE AT THE POINT DESIGNATED ON THE PLANS OR BY THE ENGINEER, USING A CUTTING METHOD APPROVED BY THE ENGINEER. WHEN CUTTING THE PIPE, MAKE THE PIPE ENDS SQUARE WITH THE LONGITUDINAL AXIS OF THE PIPE AND OTHERWISE SMOOTH SO THAT GOOD CONNECTIONS CAN BE MADE. CUT PIPE USING CUTTERS RECOMMENDED BY THE MANUFACTURER. DO NOT CUT DUCTILE IRON PIPE WITH AN OXYACETYLENE TORCH. FILE OR GRIND FIELD-CUT PIPE LENGTHS TO OBTAIN A CHAMFER ON THE OUTSIDE OF THE PIPE, ACCORDING TO THE MANUFACTURER'S RECOMMENDATIONS. REMOVE ROUGH OR SHARP EDGES FROM THE CUT END.

THE CONTRACTOR SHALL USE A PLUG MANUFACTURED IN ACCORDANCE WITH AWWA SPECIFICATION C-111. AFTER INSTALLING THE PLUG, INSTALL A BLOCKING SYSTEM IN CONFORMANCE WITH STANDARD CONSTRUCTION DRAWING WTR-18. UPON COMPLETION OF PLUGGING THE WATER LINE, AND INSTALLING PERMANENT BLOCKING, THE CONTRACTOR SHALL BACKFILL THE HOLE AS SPECIFIED IN STANDARD CONSTRUCTION DRAWING WTR-25.

PROVIDE ADEQUATE RESTRAINED JOINT LENGTHS WITH LIMITS DESIGNATED BY AN ENGINEER IN ACCORDANCE WITH THE MANUFACTURER'S SUGGESTED RECOMMENDATIONS AND STANDARD CONSTRUCTION DRAWING WTR-19.

THE PAYMENT FOR ALL WORK PERFORMED UNDER THIS ITEM SHALL BE AT THE UNIT PRICE BID PER EACH WHICH SHALL INCLUDE ALL LABOR, MATERIAL, EQUIPMENT AND INCIDENTALS NECESSARY TO PERFORM THE WORK NOTED ABOVE.

WATER PIPE ABANDONED

WHERE WATER LINE PIPE IS TO BE ABANDONED IT SHALL BE FILLED WITH ITEM 613 - LOW STRENGTH MORTAR BACKFILL (TYPE 2) PER SECTION 613 OF THE ODOT CONSTRUCTION AND MATERIAL SPECIFICATIONS.

PART 3 CITY OF COLUMBUS 16" WATER MAIN

THE CONTRACTOR SHALL ADJUST ALL EXISTING VALVE BOXES TO FINAL GRADE IN BOTH PAVEMENT AND NON-PAVEMENT AREAS IN ACCORDANCE WITH CITY OF COLUMBUS ITEM 807.

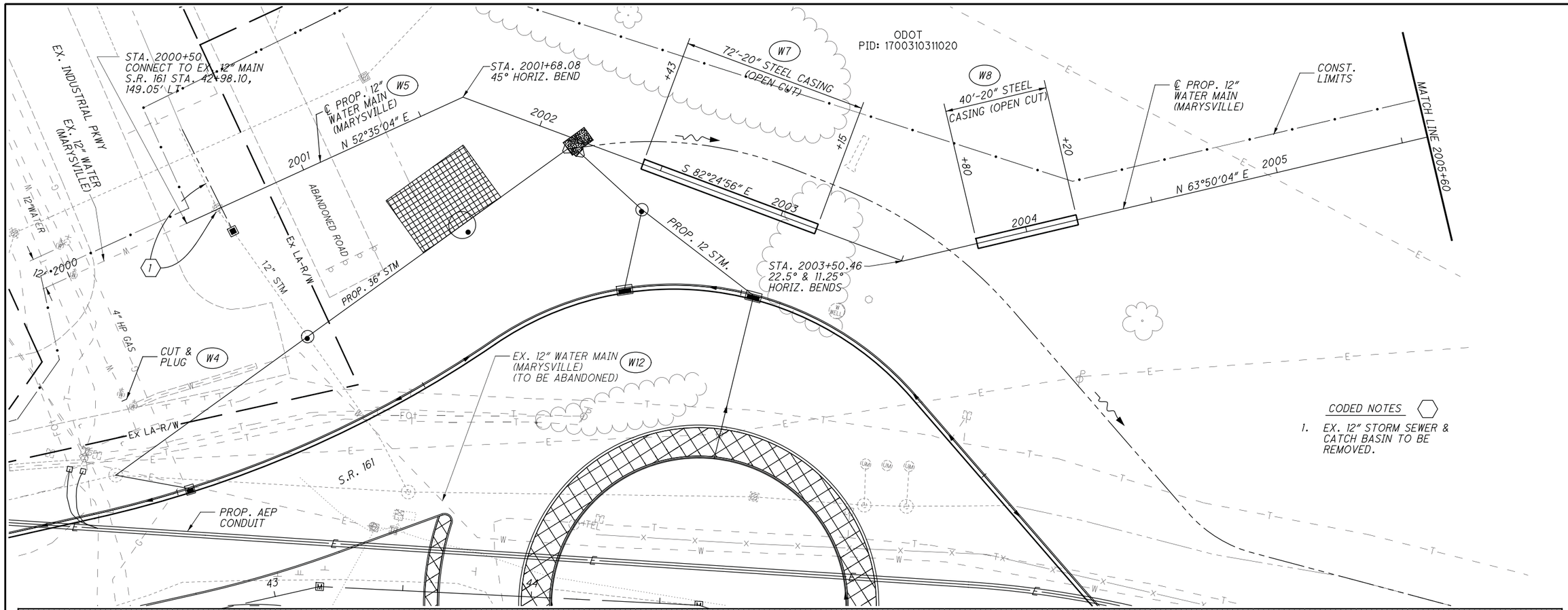

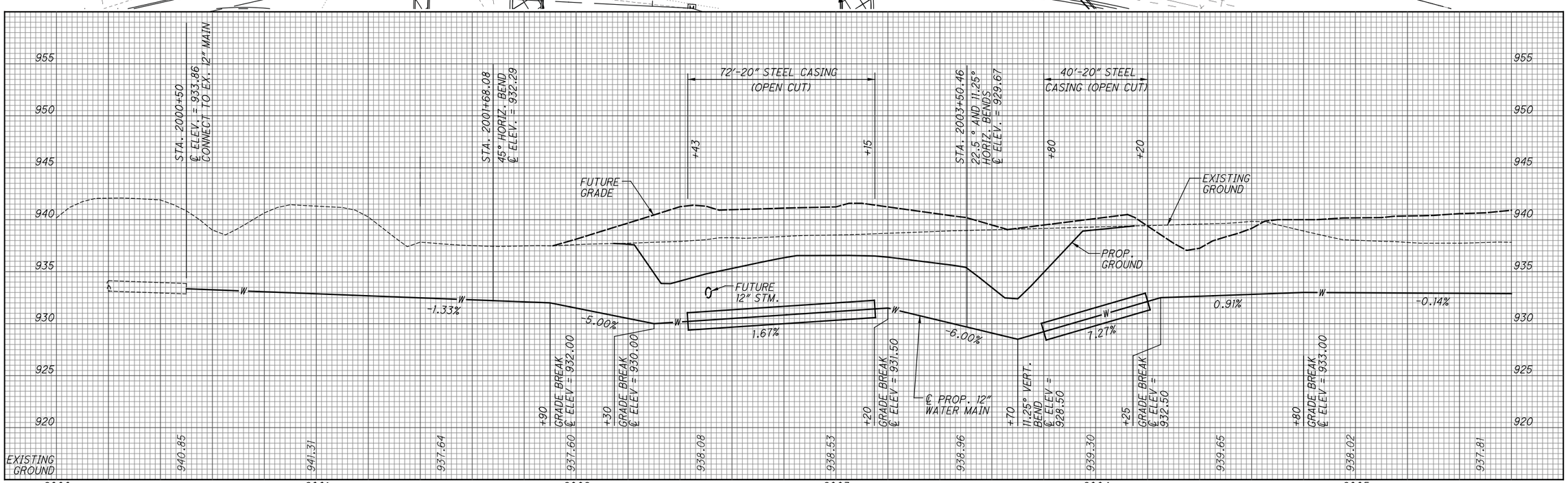

\\Akrn04\Data\2013\2013945\UNI\80748\roadway\sheets\80748UP001.dgn

N

HORIZONTAL SCALE IN FEET
0 10 20 40

CALCULATED LAM
CHECKED LMO

WATER WORK PLAN - 12" MAIN
STA. 2000+00.00 TO STA. 2005+60.00

S.R. 161/ EITERMAN RD.
ROUNDABOUT

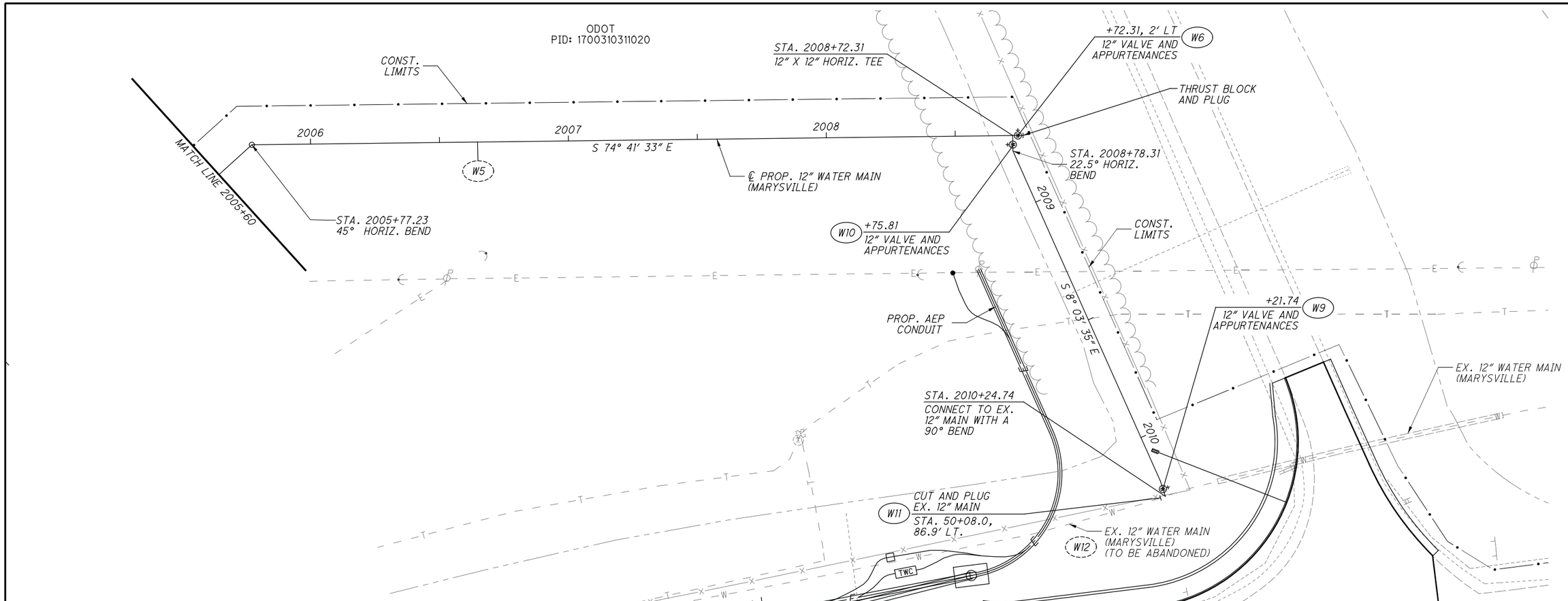

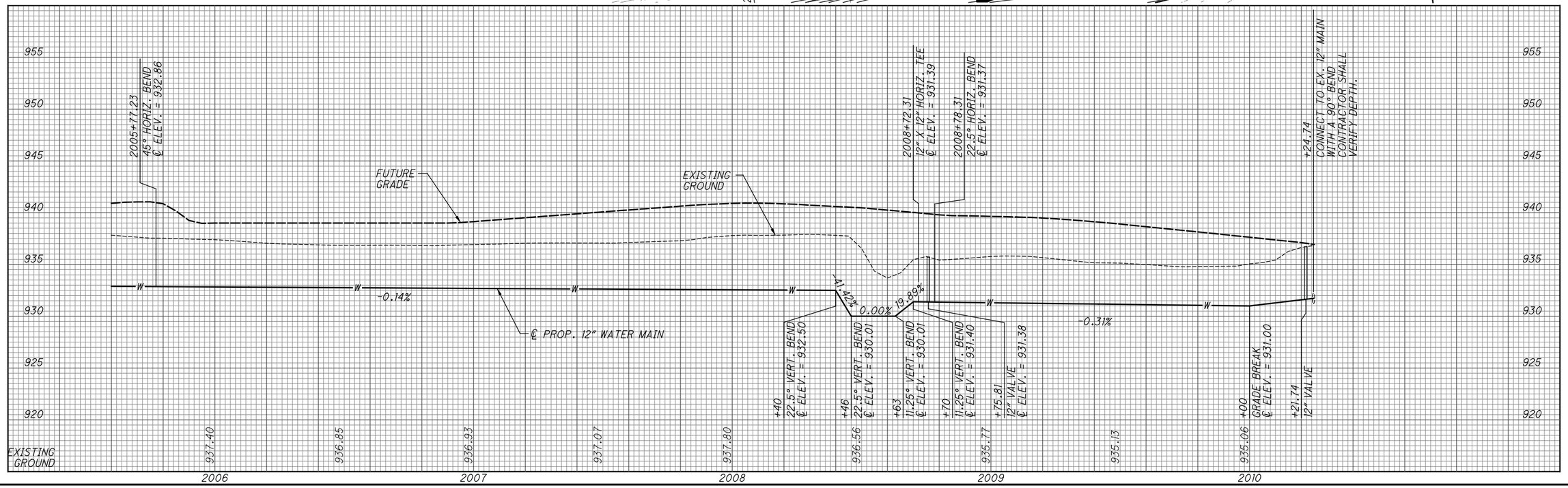

HORIZONTAL SCALE IN FEET
0 10 20 40

CALCULATED LAM
CHECKED LMO

WATER WORK PLAN - 12" MAIN
STA. 2005+60.00 TO STA. 2010+31.37

S.R. 161/EITERMAN RD.
ROUNDABOUT

"\\Akrn04\Data\2013\2013945\UNI\80748\roadway\sheets\80748UP002.dgn

GENERAL NOTES - AEP CONDUIT SYSTEM

ALL UNDERGROUND CONDUIT SYSTEM WORK SHALL BE DONE ACCORDING TO THE MOST RECENT REVISION OF THE FOLLOWING AEP SPECIFICATIONS:

AMERICAN ELECTRIC POWER -
SPECIFICATION FOR STRUCTURAL CONCRETE
SPECIFICATION NO. CE-1000-A

AMERICAN ELECTRIC POWER -
SPECIFICATION FOR UNDERGROUND DISTRIBUTION CONSTRUCTION
SPECIFICATION NO. TDO-003

ANY CHANGES, ALTERATIONS OR MODIFICATIONS TO THESE PLANS AND SPECIFICATIONS SHALL BE APPROVED BY THE AEP ENGINEER, PRIOR TO THEIR IMPLEMENTATION.

AN AEP INSPECTOR MUST APPROVE ALL DUCT AND MANHOLE INSTALLATION PRIOR TO CONCRETE PLACEMENT OR BURIAL OF CONDUIT.

ITEM SPECIAL - PRECAST CONCRETE ELECTRIC MANHOLE

1. ELECTRIC MANHOLE MATERIALS:
THE PRECAST CONCRETE ELECTRIC MANHOLES SHALL MEET THE FOLLOWING SPECIFICATIONS:

A. THE MANHOLES SHALL BE AS THAT MANUFACTURED BY UNITED PRECAST OR NORWALK CONCRETE INDUSTRIES, INC., OR AN APPROVED EQUAL.

B. THE MANHOLES SHALL BE MANUFACTURED IN ACCORDANCE WITH THE DETAILS SHOWN ON AEP MANHOLE SPECIFICATIONS SHEET.

C. THE MANHOLES SHALL HAVE OVERALL DIMENSIONS OF 8'-2" X 13'-2". DEPTH SHALL BE 7'-10" FEET INSIDE DIMENSION MINIMUM.

D. THE MANHOLES SHALL BE DESIGNED IN ACCORDANCE WITH AASHTO STANDARD HS-20-44 FOR TRUCK LOADING.

E. THE TOP OPENING SHALL BE 38 INCHES IN DIAMETER AT THE GEOMETRIC CENTER OF THE TOP SLAB.

F. THE MANHOLE FRAMES WITH HEAVY DUTY SOLID LIDS, SHALL BE PROVIDED BY AEP.

G. PULLING EYES SHALL BE PROVIDED ON THE OPPOSITE SIDE OF EACH DUCT OPENING. PULLING EYES SHALL BE AS THAT MANUFACTURED BY LINE MATERIAL COMPANY, STYLE NO. DU 2T3, OR AN APPROVED EQUAL. PULLING EYES MUST BE PLATED BEHIND NUT TO PREVENT PULL THRU.

H. ALL CONCRETE USED IN CONSTRUCTION OF THE MANHOLES SHALL BE CLASS "C" CONCRETE.

I. UNLESS SPECIFIED BY AEP, PRECAST MANHOLES SHALL BE ORDERED WITHOUT WINDOWS, KNOCK -OUTS, BELL ENDS OR OTHER PROVISIONS FOR CONDUIT ENTRY.

J. UNLESS SPECIFIED BY AEP, ENTRY OF CONDUITS INTO MANHOLES SHALL BE AT APPROXIMATELY THE LOCATIONS AND DEPTHS SHOWN ON THE DRAWINGS. CONDUIT ENTRY SHALL BE ACCOMPLISHED BY CORE -BORING OF HOLES AT APPROPRIATE LOCATIONS, IN THE FIELD, AFTER THE MANHOLE HAS BEEN INSTALLED IN ITS FINAL LOCATION. THE DIAMETER OF THE BORES SHALL BE CHOSEN TO ACCOMMODATE THE OUTSIDE DIAMETER OF THE INDIVIDUAL DUCTS WITHOUT INTERFERENCE, BUT WITH MINIMAL SPACE AROUND THE INDIVIDUAL DUCT ONCE IT IS IN PLACE. THE LOCATION OF THE BORES SHALL BE SUCH THAT THE FORMATION AND SPACING OF THE DUCT BANK IS MAINTAINED AND AS IS SHOWN ON THE DRAWINGS. ONCE ALL CONDUITS OF A BANK ARE IN PLACE IN THE MANHOLE, AND APPROPRIATE BELL ENDS HAVE BEEN INSTALLED, THE SPACE AROUND EACH INDIVIDUAL CONDUIT SHALL BE FILLED WITH NON- SHRINK GROUT.

2. INSTALLATION

A. THE CONTRACTOR SHALL PROVIDE ALL EXCAVATION AND BACKFILL NECESSARY FOR MANHOLES AND UNDERGROUND CONDUIT DUCT INSTALLATIONS.

B. EXCAVATION FOR MANHOLES SHALL EXTEND A MINIMUM OF 6 INCHES BELOW THE BOTTOM OF THEIR BASES OR AS NECESSARY FOR PROPER INSTALLATION OF DRAINAGE AND THE COMPLETION OF THE WORK. NO. 8 AGGREGATE OR SIMILAR DRAINAGE MEDIUM SHALL BE PLACED UNDER THE MANHOLES. THE TOP OF THE MANHOLE SHALL BE AT LEAST 30 INCHES BELOW THE FINAL FINISHED GRADE. IF THE STRUCTURE IS LOCATED IN A SLOPED AREA, THE MINIMUM DEPTH SHALL BE MEASURED FROM THE LOWEST SURFACE POINT ABOVE THE STRUCTURE.

C. AFTER THE MANHOLES ARE SET AND CONDUITS ARE INSTALLED, BACKFILL SHALL BE BROUGHT TO PROPER LEVEL AND SHALL BE COMPACTED IN ACCORDANCE WITH ODOT ITEM 604, SECTION 604.04 OF THE "CONSTRUCTION AND MATERIAL SPECIFICATIONS." BACKFILL SHALL BE BROUGHT TO THE BOTTOM OF THE PROPOSED PAVING BASE IN PAVED AREAS. RESTORATION OF PAVED AREAS SHALL BE AS DETAILED ON SHEET 87. RESTORATION OF UNPAVED AREAS SHALL BE IN KIND WITH FINAL SURROUNDING MATERIALS (SOD, GRAVEL, ETC.).

D. WORK SHALL BE PLANNED SO THAT EXCAVATIONS ARE OPEN FOR A MINIMUM OF TIME. NO LOAD OR BACKFILL SHALL BE APPLIED OR OTHER WORK CONDUCTED THAT WOULD DAMAGE THE NEW CONCRETE OR INTERFERE WITH ITS CURING.

E. ALL OPEN TRENCHES SHALL BE BARRICADED AND PROPERTY PROTECTED.

F. AFTER MANHOLES ARE PLACED, THE MANHOLE COVER FRAMES SHALL BE PLACED AND THE TOP ADJUSTED TO GROUND OR PAVING LEVEL. FINAL ADJUSTMENTS WILL BE REQUIRED FOR FINAL RESURFACING. A 6-INCH THICK CONCRETE OR BRICK ADJUSTING RING SHALL BE PROVIDED TO ENSURE CLOSURE BETWEEN THE TOP SLAB OF THE MANHOLE AND THE FRAME.

3. BASIS OF PAYMENT

THE WORK INCLUDED IN THESE ITEMS INCLUDING EXCAVATION AND BACKFILL, AND ALL EQUIPMENT AND MATERIALS NECESSARY, SHALL BE PAID FOR AT THE CONTRACT PRICE, COMPLETED IN PLACE.

AEP UTILITY DUCT

1. MATERIALS

A. CONDUIT- THE NONMETALLIC CONDUITS SHALL BE SCHEDULE 40 ELECTRIC RATED POLYVINYL CHLORIDE (PVC). IT SHALL BE DESIGNED TO FORM A SOUND, STRONG DUCT, FREE FROM DEFECTS. IT SHALL BE NONMAGNETIC, RESISTANT TO CORROSIVE ACTION, UNAFFECTED BY ELECTROLYSIS AND SHALL NOT SOFTEN, DEFORM OR DETERIORATE WHEN EXPOSED TO THE MAXIMUM SAFE OPERATING TEMPERATURE OF THE CABLES. THE INSIDE SURFACE OF THE CONDUIT SHALL BE SMOOTH, ROUND, AND HAVE A 5-INCH NOMINAL INSIDE DIAMETER. THE CONDUIT SHALL BE CARLON HEAVY WALL "PV-DUIT PLUS" CONDUIT OR AN APPROVED EQUAL.

B. COUPLINGS - THE COUPLINGS SHALL BE OF THE SAME MATERIAL AS THE CONDUIT AND SHALL BE GLUED SUFFICIENTLY TIGHT TO PREVENT SILT OR CONCRETE FROM ENTERING THE CONDUIT.

C. SPACERS- THE SPACERS SHALL BE PLASTIC BASE AND INTERMEDIATE TYPE FOR PVC CONDUIT.

D. REINFORCEMENTS - ALL REINFORCING SHALL BE #4, GRADE 60, DEFORMED STEEL BARS PLACED AS SHOWN WITH A MINIMUM 9" LAP SPLICE.

2. INSTALLATION

A. THE CONDUIT SHALL BE INSTALLED AS SHOWN ON THE PLANS.

B. UNLESS SPECIFIED BY AEP, ENTRY OF CONDUITS INTO MANHOLES SHALL BE AT APPROXIMATELY THE LOCATIONS AND DEPTHS SHOWN ON THE DRAWINGS. CONDUIT ENTRY SHALL BE ACCOMPLISHED BY CORE -BORING OF HOLES AT APPROPRIATE LOCATIONS, IN THE FIELD, AFTER THE MANHOLE HAS BEEN INSTALLED IN ITS FINAL LOCATION. THE DIAMETER OF THE BORES SHALL BE CHOSEN TO ACCOMMODATE THE OUTSIDE DIAMETER OF THE INDIVIDUAL DUCTS WITHOUT INTERFERENCE, BUT WITH MINIMAL SPACE AROUND THE INDIVIDUAL DUCT ONCE IT IS IN PLACE. THE LOCATION OF THE BORES SHALL BE SUCH THAT THE FORMATION AND SPACING OF THE DUCT BANK IS MAINTAINED AND AS IS SHOWN ON THE DRAWINGS. ONCE ALL CONDUITS OF A BANK ARE IN PLACE IN THE MANHOLE, AND APPROPRIATE BELL ENDS HAVE BEEN INSTALLED, THE SPACE AROUND EACH INDIVIDUAL CONDUIT SHALL BE FILLED WITH NON- SHRINK GROUT.

C. EXCAVATION FOR THE UNDERGROUND CONDUIT DUCTS SHALL EXTEND TO THE PROFILE OF THE LOWER SIDE OF THE CONDUIT ENCASEMENT, EXCEPT WHERE SPECIFIED IN THE PLANS OR DIRECTED BY THE ENGINEER. THE DUCTS SHALL HAVE A MINIMUM DEPTH OF COVER OF 30 INCHES FROM THE TOP OF THE ENCASEMENT TO THE FINISHED GRADE. THE PROFILE BETWEEN STRUCTURES SHALL BE SET SO THAT THE CONDUITS ARE LEVEL OR SLOPED TO THE NEXT STRUCTURE. WHERE CONDUITS ENTER A STRUCTURE AT A LOWER LEVEL THAN THE APPROACHING PROFILE OF THE CONDUIT, THE CONDUIT SHALL BE SLOPED DOWN TO THE STRUCTURE AT A RATE NOT-TO-EXCEED 5 PERCENT.

D. THE TRENCH SHALL BE EXCAVATED SO THAT ANY CURVE RADIUS WILL BE AS LARGE AS POSSIBLE (36" MIN. RADIUS). THE TRENCH SHALL BE EXCAVATED NO WIDER THAN NECESSARY TO ACCOMMODATE THE CONDUIT AND CONCRETE ENCASEMENT AS SHOWN ON THE DETAILS. THE BOTTOM OF THE TRENCH SHALL BE UNDISTURBED, TAMPED, AND RELATIVELY SMOOTH EARTH. TRENCHES WHICH HAVE BEEN EXCAVATED TOO DEEP AT ANY POINT ARE TO BE PARTIALLY REFILLED AND TAMPED SOLID. THE SIDES OF THE TRENCH SHALL BE TRIMMED SMOOTH TO PROVIDE FOR A UNIFORM SHEATH OF CONCRETE AROUND THE CONDUITS. THE SIDES OF THE EXCAVATION SHALL BE FORMED WHERE NECESSARY TO MAINTAIN A UNIFORM ENCASEMENT.

E. WHERE A CONDUIT CROSSES A SEWER OR WATERLINE, OR ANY OTHER UNDERGROUND UTILITY, THE CLEARANCE BETWEEN THEM SHALL BE LARGE ENOUGH TO PERMIT MAINTENANCE OF THE SYSTEM WITHOUT DAMAGE TO THE STRUCTURES. THE MINIMUM CLEARANCE SHALL BE DETERMINED BY THE UTILITIES INVOLVED. A SUITABLE SUPPORT, ON EACH SIDE OF THE STRUCTURE, SHALL BE CONSTRUCTED TO AVOID TRANSFERRING ANY DIRECT LOAD ONTO THE STRUCTURE.

F. THE CONDUIT RUNS SHALL BE AS STRAIGHT AS POSSIBLE. SCHEDULE 40 ELECTRIC RATED, 5-DEGREE ANGLE COUPLINGS OR COMBINATIONS OF 5-DEGREE ANGLE COUPLINGS WITH STRAIGHT SECTIONS OF CONDUIT ARE RECOMMENDED TO NEGOTIATE CURVES. NO FIELD BENDS.

G. PRECAST PLASTIC BASE AND INTERMEDIATE SPACERS SHALL BE PLACED AT 5-FOOT INTERVALS THAT SHALL SEPARATE THE CONDUITS A MINIMUM OF 2 INCHES APART AND PROVIDE A 3-INCH MINIMUM OUTSIDE ENCASEMENT. BURRS ON THE ENDS OF THE CONDUIT, AS THE RESULT OF SAWING, MUST BE REMOVED PRIOR TO COMPLETING A JOINT. JOINTS SHALL FORM A CONTINUOUS SMOOTH INTERIOR SURFACE BETWEEN CONDUIT SECTIONS SO THAT THE CABLE WILL NOT BE DAMAGED WHEN PULLING PAST THE JOINT. SURFACES TO BE JOINED SHALL BE CLEAN AND FREE FROM DIRT, FOREIGN MATERIALS, AND MOISTURE. THE JOINTS SHALL BE SEALED WITH PROPER CEMENT SPECIFIED BY THE CONDUIT MANUFACTURER. THE CONDUITS SHALL BE GLUED TOGETHER WITH PROPER CEMENT SO AS TO SECURELY HOLD THE CONDUITS IN PLACE. WHERE THE CONDUITS ENTER THE MANHOLE BELL ENDS SHALL BE INSTALLED FOR SMOOTH CONNECTION TO THE INTERIOR OF THE MANHOLE. THE OPEN ENDS OF THE CONDUITS SHALL BE CLOSED WITH TIGHT FITTING PLUGS TO PREVENT MUD OR OTHER FOREIGN MATERIAL FROM GETTING INTO THE CONDUIT. AFTER THE CONDUIT IS PLACED, IT SHALL BE INSPECTED BEFORE THE CONCRETE IS POURED.

H. THE PEA GRAVEL CONCRETE (AEP OH TYPE T) THIS READY - MIX CONCRETE SHALL HAVE A MINIMUM COMPRESSIVE STRENGTH OF 2500 PSI AT 28 DAYS, MINIMUM 6 SACK MIX, NO AIR ENTRAINMENT, AND 100% OF COURSE AGGREGATE SHALL PASS A 1/2" SCREEN.

THE QUANTITIES PER CUBIC YARD OF CONCRETE SHALL BE:
FINE AGGREGATE - 1390 LB, COURSE AGGREGATE - 1520 LB, CEMENT CONTENT - 564 LB, NET WATER CONTENT - 43 GAL (360 LB)

AND SHALL BE POURED AS SOON AS POSSIBLE AFTER THE CONDUITS HAVE BEEN PLACED. THE CONDUITS SHALL BE TIED DOWN TO HOLD THEM IN POSITION WHILE THE PEA GRAVEL CONCRETE IS POURED. THE PEA GRAVEL CONCRETE SHALL HAVE A SLUMP OF 6 TO 8 INCHES. THE PEA GRAVEL CONCRETE DELIVERY CHUTE SHALL BE ADJUSTED SO THAT THE FALL OF THE PEA GRAVEL CONCRETE INTO THE TRENCH IS MINIMAL. A SPLASHBOARD SHALL BE USED TO DIVERT THE FLOW OF PEA GRAVEL CONCRETE AWAY FROM THE TRENCH SIDES TO AVOID DISLODGING SOIL AND STONES. PEA GRAVEL CONCRETE SHALL BE PLACED FROM ONE END OF THE DUCT SECTION TO THE OTHER END OF THE SECTION. CONTINUOUS SPADING SHALL BE DONE TO ENSURE A FLOW OF PEA GRAVEL CONCRETE BETWEEN AND UNDER THE INDIVIDUAL CONDUITS. A LONG FLAT TOOL OR SPATULA SHALL BE WORKED CAREFULLY UP AND DOWN BETWEEN EACH VERTICAL LINE OF CONDUITS TO ELIMINATE ANY VOIDS. THE TOP OF THE PEA GRAVEL CONCRETE SHALL THEN BE SMOOTHED.

I. AFTER THE PEA GRAVEL CONCRETE HAS TAKEN ITS INITIAL SET, THE TRENCH CAN BE BACK FILLED.

J. AFTER THE DUCTS ARE INSTALLED, A FLEXIBLE STEEL MANDREL NOT LESS THAN 12 INCHES LONG WITH A CROSS SECTION OF 5 INCHES (FITTED WITH A PULLING EYE AT EACH END) SHALL BE PULLED THROUGH EACH CONDUIT. BY WORKING THE MANDREL BACK AND FORTH, OBSTRUCTURES SUCH AS CONCRETE WILL BE REMOVED. AFTER THE MANDREL HAS BEEN PULLED THROUGH, A STIFF 5-INCH CIRCULAR WIRE BRUSH AND A SWAB SHALL BE PULLED THROUGH THE CONDUITS TO REMOVE ANY OBJECTS, BITS OF CONCRETE, DIRT, ETC.

K. A 1/2" P-LINE SHALL BE INSTALLED IN ALL CONDUIT.

3. METHOD OF MEASUREMENT

THE LENGTH OF TRENCH (BY TYPE) AND 5" PVC CONDUIT, SCH. 40, ELECTRIC RATED (AEP) SHALL BE PAID FOR BY THE ACTUAL NUMBER OF FEET MEASURED BETWEEN MANHOLES, PADS, ETC. THE TRENCH SHALL EITHER BE TYPE A (IN PAVED AREAS), TYPE B (IN NON-PAVED AREAS), OR TYPE C WHEN COMBINED WITH COMMUNICATION DUCT, AS DETAILED ON SHEET 86. THE CONCRETE ENCASEMENT, PEA GRAVEL, CLASS "A" SHALL BE MEASURED PER CUBIC YARD OF CONCRETE PLACED, ACCORDING TO THE DETAILS ON SHEET 86.

4. BASIS OF PAYMENT

PAYMENT FOR THE ACCEPTED QUANTITIES OF TRENCH (BY TYPE) AND 5" PVC CONDUIT, SCH. 40, ELECTRIC RATED (AEP) SHALL BE MADE AT THE CONTRACT PRICE PER LINEAR FOOT INSTALLED, COMPLETE AND IN PLACE, INCLUSIVE OF ALL LABOR, MATERIALS, AND EQUIPMENT FOR TRENCH EXCAVATION AND BACKFILL; CONDUIT PLACEMENT; AND SURFACE RESTORATION. CONCRETE ENCASEMENT SHALL BE PAID FOR SEPERATELY, PER CUBIC YARD PLACED.

GENERAL NOTES - TWC AND DUBLINK CONDUIT SYSTEM

1. MATERIALS

A. CONDUIT NONMETALLIC CONDUIT SHALL BE SCHEDULE 40 POLYVINYL CHLORIDE (PVC) AS MANUFACTURED BY OSBURN ASSOCIATES, OR APPROVED EQUAL. THEY SHALL BE DESIGNED TO FORM SOUND, STRONG DUCT, FREE FROM DEFECT. THE INSIDE SURFACE OF THE CONDUIT SHALL BE SMOOTH, ROUND, AND HAVE A 4-INCH NOMINAL INSIDE DIAMETER.

B. COUPLINGS THE COUPLING SHALL BE OF THE SAME MATERIAL AS THE CONDUIT AND SHALL BE SUFFICIENTLY TIGHT TO PREVENT SILT OR CONCRETE FROM ENTERING THE CONDUIT.

C. SPACERS CONDUIT SHALL BE SUPPORTED AND SEPARATED BY CONDUIT BRACKETS AS MANUFACTURED BY OSBURN ASSOCIATE, PART NOS. 5120, 5121, 5150, OR 5151, OR APPROVED EQUAL.

2. INSTALLATION

A. THE CONDUIT SHALL BE INSTALLED AS SHOWN ON THE PLANS.

B. EXCAVATION FOR THE UNDERGROUND CONDUIT DUCTS SHALL EXTEND TO THE PROFILE OF THE LOWER SIDE OF THE CONDUIT ENCASEMENT, EXCEPT WHERE SPECIFIED IN THE PLANS OR DIRECTED BY THE ENGINEER. THE DUCTS SHALL HAVE A MINIMUM DEPTH OF COVER OF 30 INCHES TO FINISHED GRADE. THE PROFILE BETWEEN STRUCTURES SHALL BE SET SO THAT THE CONDUITS ARE LEVEL OR SLOPED TO THE NEXT STRUCTURE. WHERE CONDUITS ENTER A STRUCTURE AT A LOWER LEVEL THAN THE APPROACHING PROFILE OF CONDUIT, THE CONDUIT SHALL BE SLOPED DOWN TO THE STRUCTURE AT A RATE NOT-TO EXCEED 5 PERCENT.

C. THE TRENCH SHALL BE EXCAVATED SO TAT ANY CURVE RADIUS WILL BE AS LARGE AS POSSIBLE (5 FOOT RADIUS MINIMUM). THE TRENCH SHALL BE EXCAVATED NO WIDER THAN NECESSARY TO ACCOMMODATE THE CONDUIT AND GRANULAR BACKFILL AS SHOWN ON THE DETAILS. THE BOTTOM OF THE TRENCH SHALL BE UNDISTURBED, TAMPED, AND RELATIVELY SMOOTH EARTH. TRENCHES WHICH HAVE BEEN EXCAVATED TOO DEEP AT ANY POINT ARE TO BE PARTIALLY REFILLED AND TAMPED SOLID. THE SIDES OF THE TRENCH SHALL BE TRIMMED SMOOTH TO PROVIDE FOR A UNIFORM SHEATH OF GRANULAR BACKFILL AROUND THE CONDUITS AS REQUIRED.

D. WHERE A CONDUIT CROSSES A SEWER OR WATERLINE, OR ANY OTHER UNDERGROUND UTILITY, THE CLEARANCE BETWEEN THEM SHALL BE LARGE ENOUGH TO PERMIT MAINTENANCE OF THE SYSTEM WITHOUT DAMAGE TO THE STRUCTURES. THE MINIMUM CLEARANCE SHALL BE DETERMINED BY THE UTILITIES INVOLVED. A SUITABLE SUPPORT, ON EACH SIDE OF THE STRUCTURE, SHALL BE CONSTRUCTED TO AVOID TRANSFERRING ANY DIRECT LOAD ONTO THE STRUCTURE.

E. THE CONDUIT RUNS SHALL BE AS STRAIGHT AS POSSIBLE. FIVE DEGREE ANGLE COUPLINGS OR COMBINATIONS OR 5-DEGREE ANGLE COUPLINGS WITH STRAIGHT SECTIONS OF CONDUIT ARE RECOMMENDED TO NEGOTIATE CURVES. ANY FIELD BENDING OF CONDUIT SHALL BE DONE USING THE MANUFACTURER'S RECOMMENDED EQUIPMENT AND PROCEDURES.

F. PRECAST PLASTIC BASE AND CONDUIT BRACKETS SHALL BE PLACED AT 5-FOOT INTERVALS THAT SHALL SEPARATE THE CONDUITS A MINIMUM OF 2 INCHES APART AND PROVIDE A 3-INCH MINIMUM OUTSIDE ENCASEMENT. BURRS ON THE ENDS OF THE CONDUIT, AS A RESULT OF SAWING, MUST BE REMOVED PRIOR TO COMPLETING A JOINT. JOINTS SHALL FORM A CONTINUOUS SMOOTH INTERIOR SURFACE BETWEEN CONDUIT SECTIONS SO THAT THE CABLE WILL NOT BE DAMAGED WHEN PULLING PAST THE JOINT. SURFACES TO BE JOINED SHALL BE CLEAN AND FREE FROM DIRT, FOREIGN MATERIALS, AND MOISTURE. THE JOINTS SHALL BE SEALED WITH PROPPER CEMENT SPECIFIED BY THE CONDUIT MANUFACTURER. THE CONDUITS SHALL BE TIED TOGETHER WITH HEAVY CORD SO AS TO SECURELY HOLD THE CONDUITS IN PLACE. THE OPEN ENDS OF THE CONDUIT SHALL BE CLOSED WITH TIGHT FITTING PLUGS TO PREVENT MUD OR OTHER FOREIGN MATERIAL FROM GETTING INTO THE CONDUIT. AFTER THE CONDUIT IS PLACED, IT MUST BE INSPECTED BY TIME WARNER AND DUBLINK BEFORE PLACEMENT OF GRANULAR BACKFILL.

G. THE GRANULAR BACKFILL SHALL BE PLACED AS SOON AS POSSIBLE AFTER THE CONDUITS HAVE BEEN INSTALLED AND INSPECTED. CONDUITS SHALL BE TIED DOWN TO HOLD THEM IN POSITION WHILE THE GRANULAR BACKFILL IS PLACED AND COMPACTED. GRANULAR BACKFILL SHALL BE SIFTED AROUND AND BETWEEN THE CONDUIT AT A RATE THAT ALLOWS FOR COMPLETE FILLING OF VOIDS. THE COST OF GRANULAR BACKFILL SHALL BE INCLUDED IN THE UNIT PRICE BID PER LINEAL FOOT FOR TRENCH, TYPES A OR B. THE CONTRACTOR MAY SUBSITUTE CONTROLLED DENSITY FILL PER CITY OF COLUMBUS ITEM 613, TYPE 2 AT NO ADDITIONAL COST.

H. AFTER THE DUCTS ARE INSTALLED, A FLEXIBLE STEEL MANDREL NOT LESS THAN 12 INCHES LONG WITH A CROSS SECTION OF 3-3/4 INCHES (FITTED WITH A PULLING EYE AT EACH END) SHALL BE PULLED THROUGH EACH CONDUIT TO INSURE CLEANLINESS AND CONTINUITY. BY WORKING THE MANDREL BACK AND FORTH, OBSTRUCTIONS SUCH AS CONCRETE MUST BE REMOVED. AFTER THE MANDREL HAS BEEN PULLED THROUGH, A STIFF 4-INCH CIRCULAR WIRE BRUSH AND A SWAB SHALL BE PULLED THROUGH THE CONDUITS TO REMOVE ANY FOREIGN OBJECTS, BITS OF CONCRETE, DIRT, ETC.

I. A 1/4-INCH BRAIDED NYLON PULLING ROPE SHALL BE INSTALLED IN ALL SPARE CONDUITS. ENDS OF THE CONDUIT SHALL BE SEALED IN AN APPROVED MANNER TO KEEP ALL MOISTURE AND FOREIGN MATERIALS OUT OF THE CONDUIT.

J. AT "PULL-UP" LOCATIONS, 12 INCHES OF CONDUIT SHALL BE EXPOSED ABOVE FINISHED GRADE AND SEALED WITH A 4-INCH CAP.

K. CONDUIT ONLY SHALL BE INSTALLED BY THE CONTRACTOR TO THE LOCATIONS SHOWN FOR THE POWER SUPPLY AND AMPLIFIER. FOUNDATIONS, PADS, AND EQUIPMENT FOR THE POWER SUPPLY AND AMPLIFIER WILL BE CONSTRUCTED BY TWC AND/OR DUBLINK.

L. THE CONTRACTOR MUST COORDINATE THE TERMINATION OF ALL CONDUITS FOR EQUIPMENT AND RISERS WITH TWC AND/OR DUBLINK. THE COST OF COORDINATION SHALL BE INCLUDED IN THE UNIT PRICE BID FOR THE APPROPRIATE CONDUIT ITEM.

3. METHOD OF MEASUREMENT

THE LENGTH OF TRENCH, TYPE C AND 4" PVC CONDUIT, SCH 40 (TWC OR DUBLINK) SHALL BE PAID FOR BY THE ACTUAL NUMBER OF FEET MEASURED BETWEEN MANHOLES, PADS, ETC. THE TRENCH SHALL BE AS DETAILED ON SHEET 86.

4. BASIS OF PAYMENT

PAYMENT FOR THE ACCEPTED QUANTITIES OF TRENCH, TYPE C AND 4" PVC CONDUIT, SCH. 40 (TWC OR DUBLINK) SHALL BE MADE AT THE CONTRACT PRICE PER LINEAR FOOT INSTALLED, COMPLETE AND IN PLACE, INCLUSIVE OF ALL LABOR, MATERIALS, AND EQUIPMENT FOR TRENCH EXCAVATION AND BACKFILL; CONDUIT PLACEMENT; AND SURFACE RESTORATION.

ITEM SPECIAL - HAND HOLE, INSTALLATION ONLY (TWC OR DUBLINK)

HAND HOLES FOR USE WITH THE TWC OR DUBLINK CONDUIT, SHALL BE PROVIDED BY OTHERS AND INSTALLED BY THE CONTRACTOR.

PAYMENT FOR ALL LABOR, EQUIPMENT, AND MATERIALS NECESSARY TO INSTALL THE HAND HOLE (PROVIDED BY OTHERS) SHALL BE INCLUDED IN THE UNIT PRICE BID PER EACH.

CALCULATED LMO
CHECKED KJG

UTILITY DUCT GENERAL NOTES

S.R. 161/ EITERMAN RD.
ROUNDABOUT

P:\PR41806AA\FRA\80748\UTILITIES\SHEETS\80748UD007.DGN

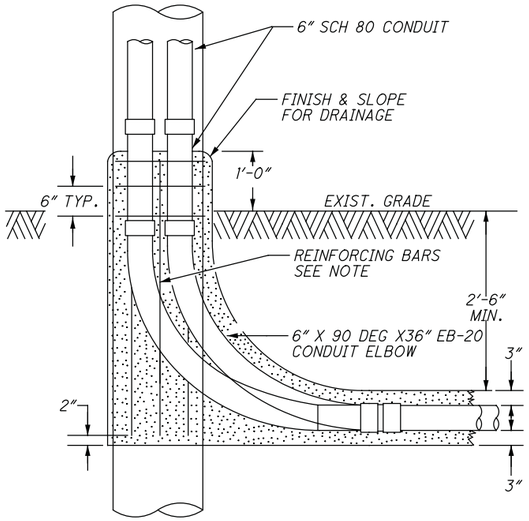

NOTE:

HORIZONTAL RE-BAR TO BE #3 PLAIN ROUND STEEL PER ASTM-A615 GRADE 40KSI. VERTICAL RE-BAR TO BE #4 DEFORMED STEEL PER ASTM-A615 GRADE 40KSI.

ALL EXPOSED CONCRETE TO BE SEALED WITH AN APPROVED CONCRETE SEALER.

RISER POLE DETAILS

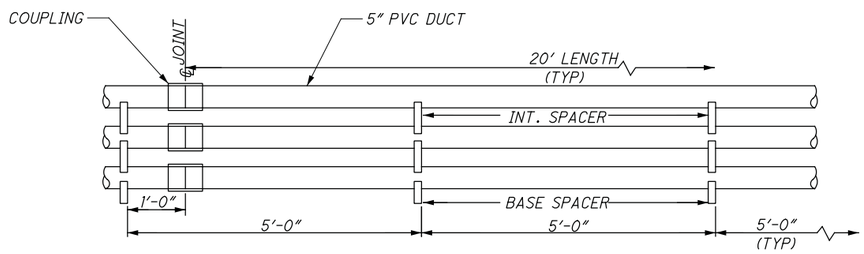

DUCT STACKING DETAIL

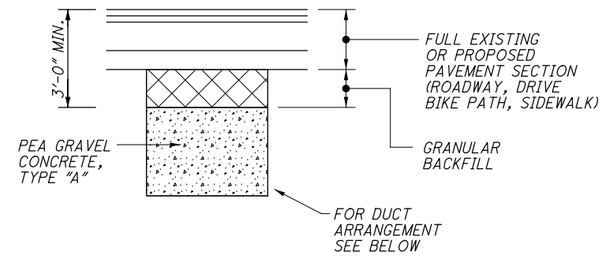

TRENCH DETAIL - TYPE A

ELECTRICAL DUCT IN PAVED AREAS

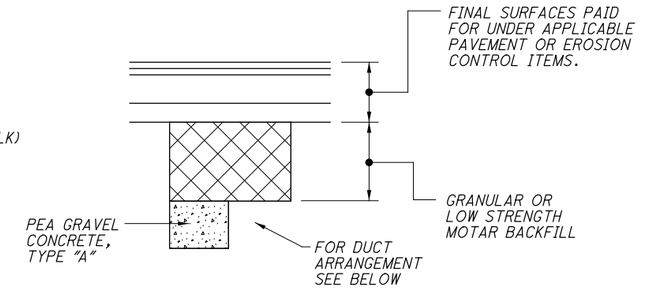

TRENCH DETAIL - TYPE C

COMMUNICATION DUCT AND COMBINATION COMMUNICATION/ELECTRICAL DUCT

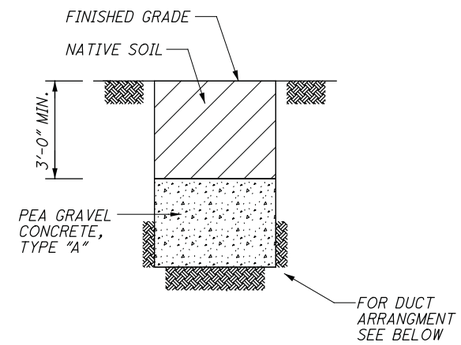

TRENCH DETAIL - TYPE B

ELECTRICAL DUCT IN NON-PAVED AREAS

NOTE:

ALL 5" PVC DUCT (AEP) SHALL HAVE A 2" MIN. SEPARATION, A 3" MIN. ENVELOPE, AND BE ENCASED IN PEA GRAVEL CONCRETE, CLASS "A". SPACING FOR 4" PVC DUCT (TWC OR DUBLINK) SHALL BE THE SAME BUT WITHOUT CONCRETE ENCASEMENT.

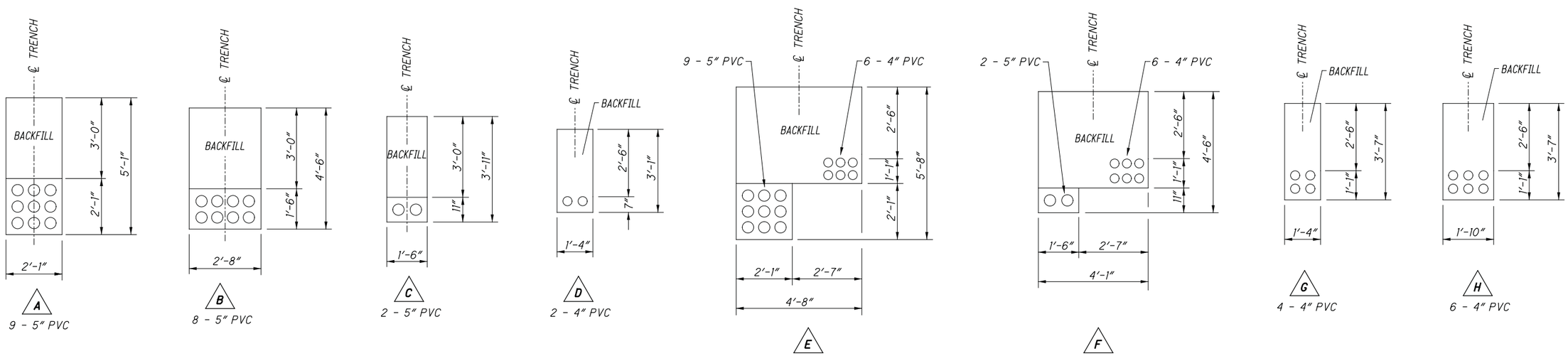

UTILITY DUCT TRENCH DETAILS

CALCULATED LMO
CHECKED KJG

UTILITY DUCT DETAILS

S.R. 161/ EITERMAN RD. ROUNDABOUT

P:\PR41806AA\FRA\80748\UTILITIES\SHEETS\80748UD008.DGN

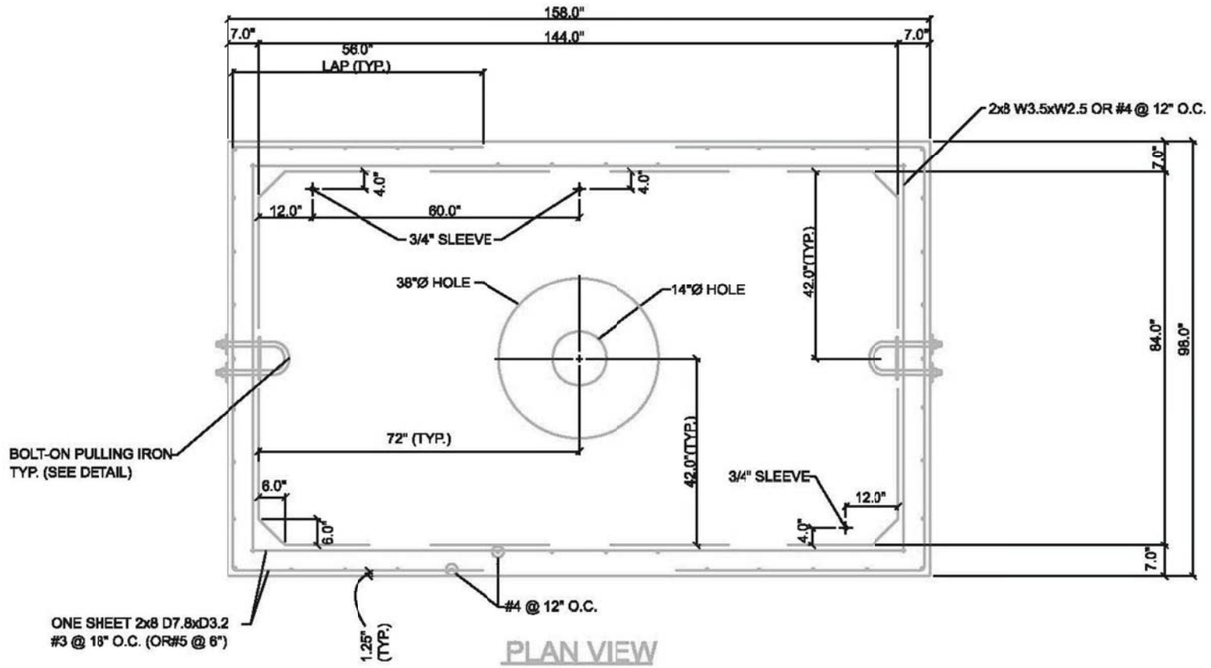

PLAN VIEW

MANHOLE DETAIL

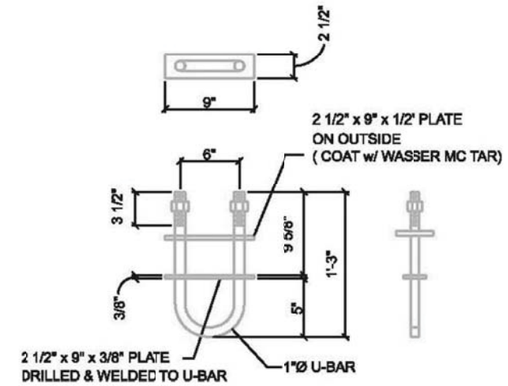

BOLT-ON PULLING IRON DETAIL

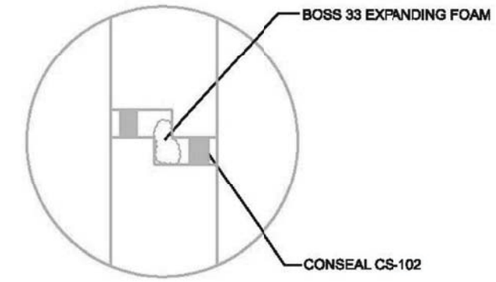

JOINT DETAIL

WEIGHTS:

BASE SECTION "A": 15,600#

SECTION "B": 21,700#

TOP SLAB: 13,300#

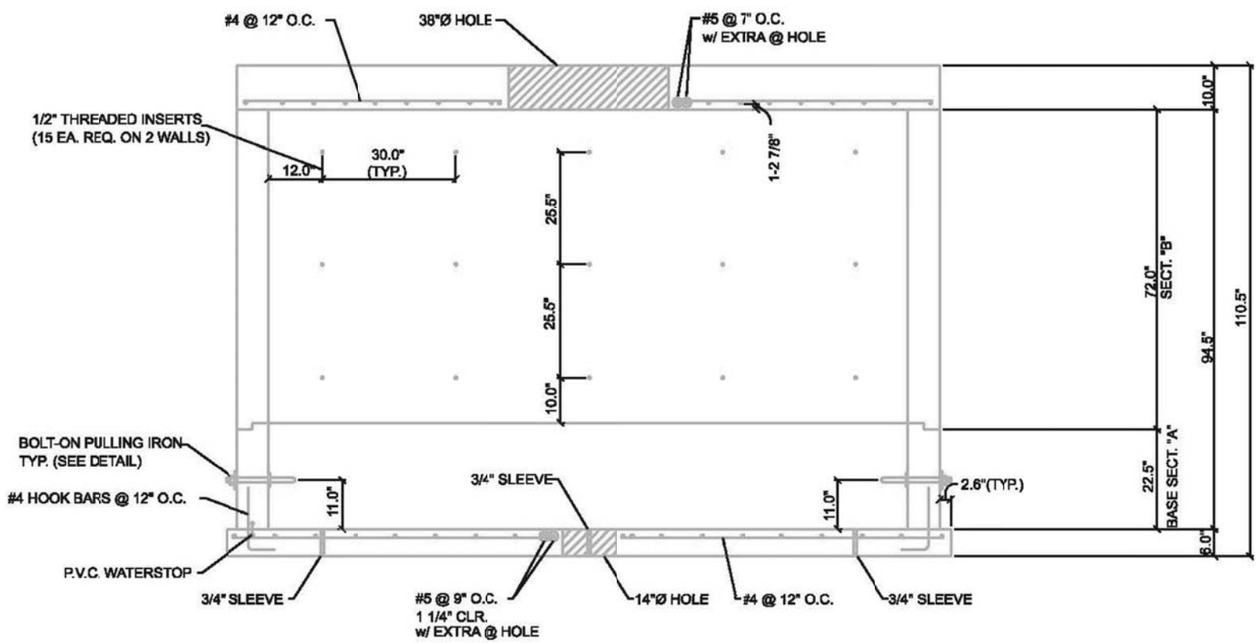

ELEVATION VIEW

MANHOLE DETAIL

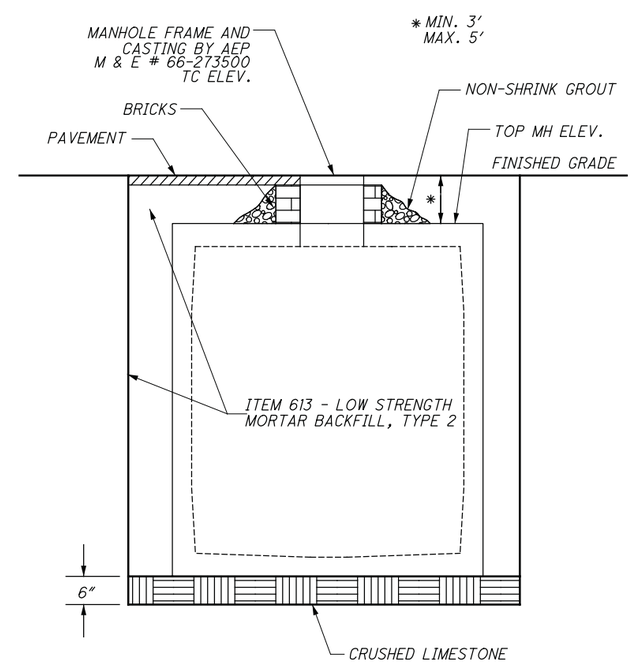

MANHOLE INSTALLATION

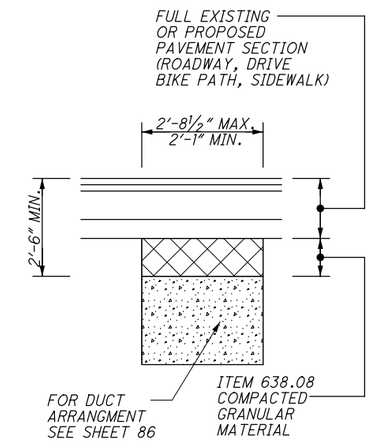

TRENCH DETAIL

TYPE A

IN PAVED AREAS

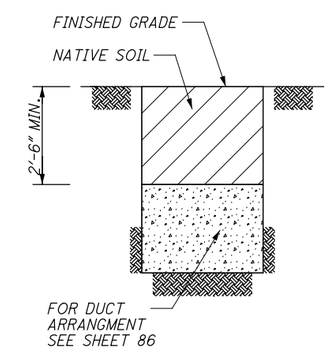

TRENCH DETAIL

TYPE B

IN NON-PAVED AREAS

TRENCH DETAIL NOTE:
CONTRACTOR MAY PLACE ITEM 304 WITH NATIVE SOIL IN AREAS OUTSIDE LIMITS OF ROADWAY OR ROADWAY WIDENING .

CALCULATED LMO
CHECKED KJG

AEP ELECTRICAL DUCT DETAILS

S.R. 161/ EITERMAN RD. ROUNDABOUT

P:\PR41806AA\FRA\80748\UTILITIES\SHEETS\80748UD009.DGN

EXISTING FIBERGLASS SWITCH PAD
℄ S.R. 161 STA. 41+50.68, 82.8' LT

TEMPORARY TIE-IN TO BE ABANDONED

12" WATER (MARYSVILLE) (TO BE ABANDONED)

FOR A - H SEE SHEET 86

6980 S.R. 161

POT Sta. 1022+20.38

N 61° 30' 09" E

BEGIN CONCRETE ENCASED DUCT TIE-IN TO EXISTING MANHOLE
℄ S.R. 161 STA. 41+08.23, 79.1' LT
℄ MAINLINE DUCT STA. 1022+99.08

S 28° 29' 55" E

S.R. 161

EXISTING BRANCH

POT Sta. 43+17.71

℄ MAINLINE DUCT

℄ CONST. S.R. 161

POT Sta. 44+65.18

N 80° 50' 02" E

N 79° 56' 59" E

S 84° 58' 42" E

MATCH LINE STA. 1027+50.00

EXISTING SWITCH

CAUTION: EXISTING ELECTRICAL MANHOLE IS LIVE. TIE IN TO THE EXISTING MANHOLE SHALL BE COMPLETED BY AEP ONLY. NO OTHERS ARE PERMITTED TO TIE INTO LIVE ELECTRICAL MANHOLES.

CROSS REFERENCES	
SHEET NO.	DESCRIPTION
79-80	DRAINAGE PLAN & PROFILE
51	ESTIMATED QUANTITIES

EXISTING CONDUIT (PLACED IN UNI-161-12.98)

BEGIN PROPOSED CONDUIT

EXISTING ELECTRICAL MANHOLE
STA. 1022+99.08 MAINLINE =
STA. 900+00.00 TEMPORARY TIE-IN - TO BE ABANDONED

EXISTING GRADE

PROPOSED GRADE

EXISTING PGL

EX. ELEC.

EX. F.O.

36" STM.

-3.60 %

4" UD

EX. 8" GAS

EX. TELE.

EX. SIGNAL WIRE

3 X 2 - 4" DUCTS

PGL (TOP OF CONCRETE)

+0.92 %

-0.48 %

1' MIN CLEARANCE

3 X 3 - 5" DUCTS

STA 1024+00.00
ELEV = 930.47'

STA 1026+75.00
ELEV = 933.00'

1023+00 1024+00 1025+00 1026+00 1027+00

HORIZONTAL SCALE IN FEET 0 10 20 40

CALCULATED LMO
CHECKED KJG

UTILITY DUCT PLAN AND PROFILE
STA. 1023+00.00 TO STA. 1027+50.00

S.R. 161/ EITERMAN RD. ROUNDABOUT

P:/PR41806AA/FRA/80748/UTILITIES/SHEETS/80748UP410.DGN

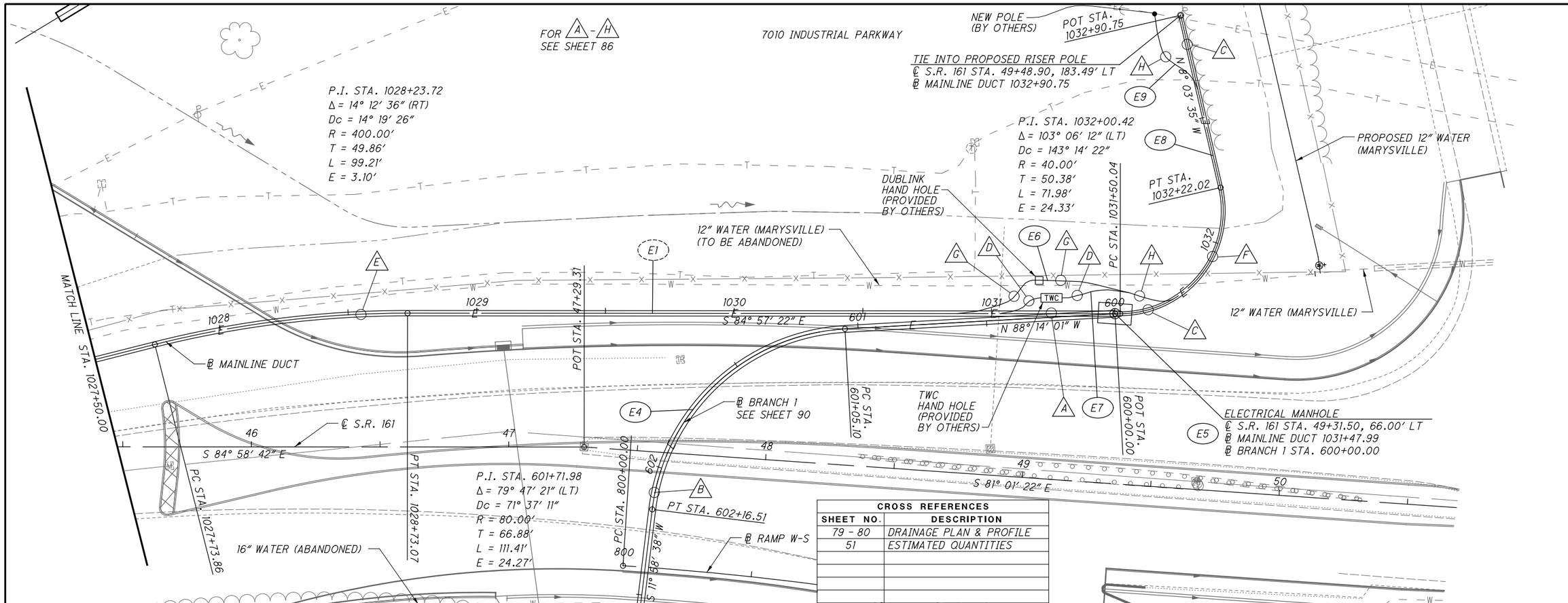

CROSS REFERENCES	
SHEET NO.	DESCRIPTION
79 - 80	DRAINAGE PLAN & PROFILE
51	ESTIMATED QUANTITIES

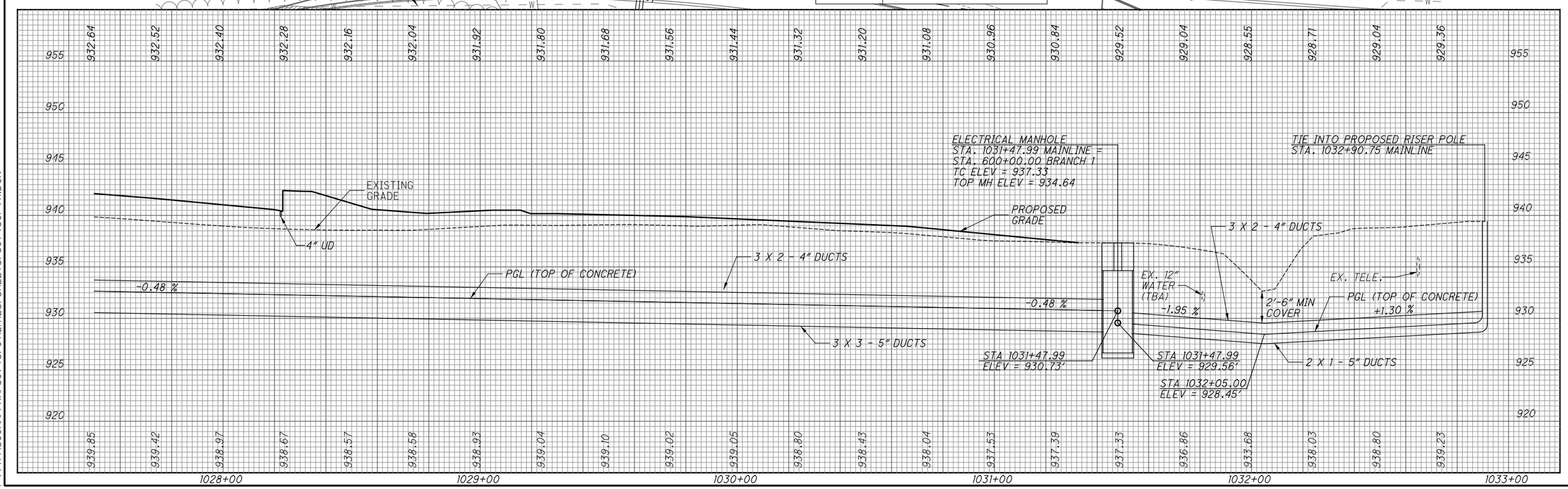

HORIZONTAL SCALE IN FEET

CALCULATED LMO
CHECKED KJG

UTILITY DUCT PLAN AND PROFILE
STA. 1027+50.00 TO STA. 1032+90.75

S.R. 161/EITERMAN RD. ROUNDABOUT

P:/PR41806AA/FRA/80748/UTILITIES/SHEETS/80748UP411.DGN

CROSS REFERENCES	
SHEET NO.	DESCRIPTION
79 - 80	DRAINAGE PLAN & PROFILE
51	ESTIMATED QUANTITIES

FOR A - H
SEE SHEET 86

HORIZONTAL SCALE IN FEET 0 10 20 40

CALCULATED LMO
CHECKED KJG

7010 INDUSTRIAL PARKWAY

POT STA. 600+00.00

PC STA. 1031+50.04

E5

ELECTRICAL MANHOLE
℄ S.R. 161 STA. 49+31.50, 66.00' LT
℄ MAINLINE DUCT 1031+47.99
℄ BRANCH 1 STA. 600+00.00

N 88° 14' 10" W

S 81° 01' 22" E

16" WATER (ABANDONED)

℄ S.R. 161

PC STA. 601+05.10

12" WATER (MARYSVILLE) (TO BE ABANDONED)

PROPOSED 12" WATER (MARYSVILLE)

S 84° 57' 22" E

℄ RAMP W-S

PT STA. 602+16.51

16" WATER (07-097)

Ex LA-R/W

Ex U

POT STA. 603+27.69

E4

E1

P.I. STA. 601+71.98
Δ = 79° 47' 21" (LT)
Dc = 71° 37' 11"
R = 80.00'
T = 66.88'
L = 111.41'
E = 24.27'

S 11° 58' 38" W

PC STA. 800+00.00

℄ BRANCH 1

POT STA. 47+29.31

℄ MAINLINE DUCT

933.50 933.50 933.50 933.50 933.50 933.50 933.50 932.56 931.63 930.69

ELECTRICAL MANHOLE
STA. 1031+47.99 MAINLINE =
STA. 600+00.00 BRANCH 1
TC ELEV = 937.33
TOP MH ELEV = 934.64

PROPOSED GRADE

EXISTING GRADE

6" UD

PGL (TOP OF CONCRETE)

+0.00 %

-3.75%

EX. 16" WATER (ABANDONED)

2'-6" MIN COVER SEE ELEV.

+15.00 %

STA. 603+27.69
ELEV = 934.03
END CONC. ENCASED DUCT
CAP END

2 X 4 - 5" DUCTS

STA 600+00.00 ELEV = 933.50'

STA 601+50.00 ELEV = 933.50'

STA 602+50.00 ELEV = 929.75'

STA 602+99.12 ELEV = 929.75'

950 945 940 935 930 925 920 915

937.33 937.46 937.76 938.43 938.91 939.45 940.51 941.13 940.22 939.41 937.65 936.36 935.98 938.16

600+00 601+00 602+00 603+00

UTILITY BRANCH 1 DUCT PLAN AND PROFILE
STA. 600+00.00 TO STA. 602+28.57

S.R. 161/ EITERMAN RD. ROUNDABOUT

P:/PR41806AA/FRA/80748/UTILITIES/SHEETS/80748UP416.DGN

ITEM 630 - SIGN, STREET NAME, AS PER PLAN

THE ROUNDABOUT STREET NAME SIGNS SHALL BE MANUFACTURED TO THE CURRENT CITY OF DUBLIN SPECIFICATIONS.

THE ALUMINUM SIGN BLANK SHALL BE 12 INCHES IN HEIGHT. THE LEGEND SHALL BE WHITE IN COLOR ON FEDERAL BROWN, FEDERAL STANDARD 20040, BACKGROUND. THE LETTERING SHALL BE 8 INCH MIXED CASE LETTERS FOR THE STREET NAME AND 5 INCH MIXED CASE LETTERS FOR THE STREET NAME SUFFIX. THE WHITE CHEVRON SHALL BE PROPORTIONAL TO THE CHEVRON USED ON THE W1-8 SIGN, BUT TO THE HEIGHT SHOWN IN THE DETAIL BELOW. ALL WHITE SIGN ELEMENTS SHALL BE REFLECTIVE SHEETING ACCORDING TO ASTM D 4956, TYPE XI. THE FONT FOR ALL LETTERING SHALL BE HIGHWAY GOTHIC, SERIES C. THE SIGNS SHALL BE DOUBLE POSTED AND MOUNTED 3 FEET ABOVE THE GROUND. A 2-INCH FEDERAL BROWN RAIN CAP SHALL BE INSTALLED ON EACH POST, ABOVE THE TOP OF THE SIGN FACE.

PAYMENT FOR THIS ITEM SHALL BE MADE AT THE UNIT PRICE BID PER EACH SIGN FABRICATED, INCLUDING ALL NECESSARY HARDWARE TO PROPERLY MOUNT SIGN ON SUPPORTS.

ITEM 621 - RAISED PAVEMENT MARKER REMOVED

THE FOLLOWING ESTIMATED QUANTITY IS PROVIDED IN THE TRAFFIC CONTROL GENERAL SUMMARY FOR RPM REMOVAL.

ITEM 621, RAISED PAVEMENT MARKER REMOVED 218 EACH

ITEM 647 - PAVEMENT MARKING, MISC.: YIELD LINE, TYPE A125

THIS ITEM SHALL MEET THE REQUIREMENTS OF ITEM 647 AND CONFORM TO THE FOLLOWING DIMENSIONS:

PAYMENT FOR THIS ITEM SHALL BE MADE AT THE CONTRACT PRICE BID PER FOOT.

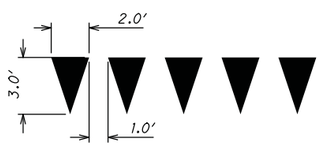

ITEM 647 - LANE ARROW, TYPE A125

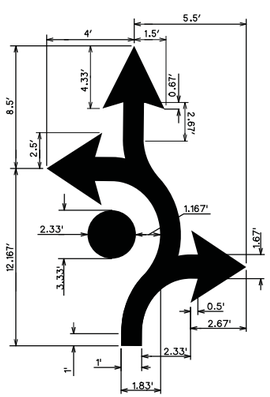

ELEMENT DIAGRAM

OVERALL DIMENSIONS		
ELEMENTS INCLUDED	OVERALL WIDTH	OVERALL HEIGHT
1	6.5'	14.67'
1 & 2	6.5'	20.67'
1 & 3	9.67'	14.67'
1, 2 & 3	9.67'	20.67'
0 & 2*	4.5'	20.67'
0, 2 & 3*	7.67'	20.67'
2	3.833'	20.67'
2 & 3	7.0'	20.67'
3	6.0'	8.0'

* THE DOT (ELEMENT 0) IS ONLY USED IN SYMBOLS FOR THE LEFTMOST LANE.

ROUNDABOUT APPROACH LANE USE SIGN SYMBOL DETAILS

(ALL ROUNDABOUT LANE USE SIGNS SHALL HAVE A BLACK LEGEND ON A WHITE BACKGROUND)

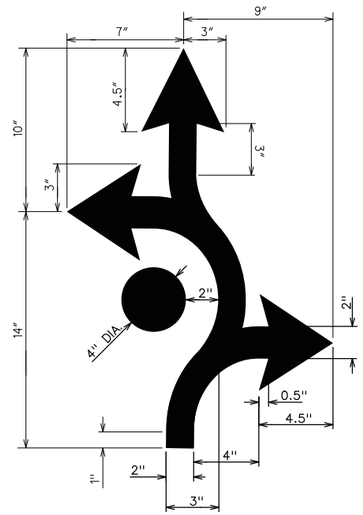

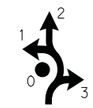

ELEMENT DIAGRAM

OVERALL DIMENSIONS		
ELEMENTS INCLUDED	OVERALL WIDTH	OVERALL HEIGHT
1	10.75"	17"
1 & 2	10.75"	24"
1 & 3	16"	17"
1, 2 & 3	16"	24"
0 & 2*	7.5"	24"
0, 2 & 3*	12.75"	24"
2	6.25"	24"
2 & 3	11.5"	24"
3	10"	9.25"

* THE DOT (ELEMENT 0) IS ONLY USED IN SYMBOLS FOR THE LEFTMOST LANE.

ITEM 644 - CROSSWALK LINE, AS PER PLAN

THIS ITEM SHALL MEET THE REQUIREMENTS OF ITEM 644 AND CONFORM TO THE FOLLOWING DIMENSIONS:

PAYMENT FOR THIS ITEM SHALL BE MADE AT THE CONTRACT PRICE BID PER FOOT.

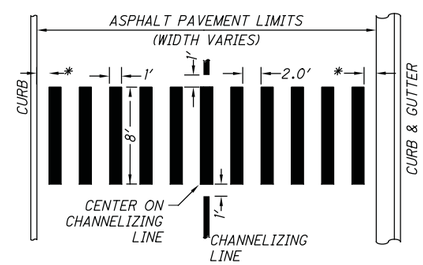

2.0' TYPICAL SPACING MAY VARY SLIGHTLY FOR PROPER PLACEMENT WITH CHANNELIZING LINE AND CURB AND GUTTER.

* BALANCE SPACE BETWEEN EDGES OF PAVEMENT

ITEM 630 - GROUND MOUNTED SUPPORT, NO. 3 POST, TYPE S, AS PER PLAN

ALL SIGN SUPPORTS SHALL BE 2-INCH SQUARE GALVANIZED POSTS WITH DIE CUT KNOCK OUTS (ALLIED QUICK-PUNCH SUPPORTS OR APPROVED EQUAL). A SINGLE BREAKAWAY ANCHOR SHALL BE USED. A 2-INCH GALVANIZED RAIN CAP SHALL BE INSTALLED ON EACH POST, ABOVE THE TOP OF THE SIGN FACE. ALL SIGNS SHALL BE ERECTED WITH A 7-FOOT VERTICAL CLEARANCE BETWEEN THE TOP OF CURB AND THE BOTTOM OF EACH SIGN, UNLESS OTHERWISE DESIGNATED BY THE CITY ENGINEER. HORIZONTAL CLEARANCE FOR BOTH CURB AND DITCH SECTIONS SHALL BE AS PER ODOT STANDARDS AND SHALL ALLOW AT LEAST 2-FT HORIZONTAL CLEARANCE FROM THE FACE OF CURB. THE ANCHOR POST SHALL BE PAID FOR SEPARATELY. PAYMENT FOR THIS ITEM SHALL BE FOR THE LENGTH ONLY, INCLUDING THE 8" OVERLAP IN THE ANCHOR POST, AND ALL MISCELLANEOUS ATTACHMENT HARDWARE.

SIGNS S-4, S-8, AND S-14 SHALL BE MOUNTED 3-FT FROM FINISHED GRADE TO THE BOTTOM OF THE SIGN. THESE SIGNS SHALL BE FABRICATED FROM A SINGLE BLANK.

ITEM 630 - SIGNING, MISC.: 2 1/4" SQUARE ANCHOR POST

IN ADDITION TO ITEMS 630 AND 730, THE ANCHOR POST PROVIDED AND INSTALLED WITH THE GROUND MOUNTED SIGN SUPPORT SHALL BE AS PER ODOT STANDARD DRAWING TC-41.20, AND SHALL BE 48" IN LENGTH. THE ANCHOR SHALL BE 2 1/4-INCHES SQUARE, 12 GAGE, WITH A 2 1/2-INCH OVERSLEEVE 18-INCHES LONG OVER TOP OF THE ANCHOR. THIS ITEM SHALL BE PAID FOR AT THE UNIT PRICE BID PER EACH.

CALCULATED BEB
CHECKED AKF

SIGNING AND PAVEMENT MARKING NOTES

S.R. 161/EITERMAN RD. ROUNDABOUT

\\AKRN04\DATA\2013\2013945\UNI\80748\TRAFFIC\SHEETS\80748TN001.DGN
3/18/2015
10:45:17 AM
JGRIMM

SHEET NO.	REFERENCE NO.	LOCATION	STATION FROM	STATION TO	SIDE	621 RPM TWO WAY (WHITE/RED) EACH	621 RPM TWO WAY (YELLOW/RED) EACH	621 RPM TWO WAY (YELLOW/YELLOW) EACH	644 EDGE LINE, 4" (WHITE) FT	644 EDGE LINE, 4" (YELLOW) FT	644 EDGE LINE, 6" (WHITE) FT	644 EDGE LINE, 6" (YELLOW) FT	644 LANE LINE, 4" FT	644 CENTER LINE, DOUBLE SOLID (YELLOW) FT	644 CHANNELIZING LINE, 8" FT	644 CHANNELIZING LINE, 12" FT	644 STOP LINE FT	644 CROSSWALK LINE, AS PER PLAN FT	644 TRANSVERSE/ DIAGONAL LINE (WHITE) FT	644 TRANSVERSE/ DIAGONAL LINE (YELLOW) FT	644 LANE ARROW EACH	644 DOTTED LINE, 8" FT	644 DOTTED LINE, 12" FT	647 LANE ARROW, TYPE A125 EACH	647 PAVEMENT MARKING, MISC.: YIELD LINE FT
99	ELY-1	S.R. 161	38+57	41+00	LT					243															
99	ELY-2	S.R. 161	36+50	41+00	RT					450															
99	LL-1	S.R. 161	38+57	41+00	LT	3							243												
99	LL-2	S.R. 161	38+57	41+00	LT	3							243												
99	LL-3	S.R. 161	36+50	41+00	RT	6							450												
99	LL-4	S.R. 161	38+68	41+00	RT	3							232												
100	ELY-3	S.R. 161	41+00	43+73	LT					273															
100	ELY-4	S.R. 161	44+36	45+01	LT					283															
100	ELY-5	S.R. 161	45+62	46+50	LT					88															
100	ELY-6	S.R. 161	45+62	46+50	RT					88															
100	ELY-7	S.R. 161/ EITERMAN RD.	45+27	6010+50	RT					102															
100	ELY-8	S.R. 161/ EITERMAN RD.	44+17	6010+50	RT					116															
100	ELY-9	S.R. 161	41+00	43+71	RT					271															
100	ELW-1	S.R. 161	45+55	46+50	RT				95																
100	LL-5	S.R. 161	41+00	42+59	LT	1							159												
100	LL-6	S.R. 161	41+00	42+59	LT	1							159												
100	LL-7	S.R. 161	41+00	42+43	RT	1							143												
100	LL-8	S.R. 161	41+00	42+44	RT	1							144												
100	CL-1	S.R. 161	42+59	45+10	LT	9									251										
100	CL-2	S.R. 161	42+59	45+11	LT	9									252										
100	CLW-3	S.R. 161	43+71	43+73	LT/RT	3										77									
100	CL-4	S.R. 161	45+43	45+47	LT/RT	3									72										
100	CLW-5	S.R. 161	45+62	45+62	LT/RT	3										58									
100	CL-6	S.R. 161	45+57	46+50	LT	2									93										
100	CL-7	S.R. 161	45+52	46+50	LT	3									98										
100	CL-8	S.R. 161	45+62	46+50	RT	3									88										
100	CLW-9	S.R. 161	44+17	45+27	RT	3										110									
100	CL-10	S.R. 161	45+43	6010+52	RT	3									103										
100	CL-11	S.R. 161	44+22	45+21	RT	3									99										
100	CL-12	S.R. 161	42+43	43+89	RT	4									146										
100	CL-13	S.R. 161	42+44	43+80	RT	4									136										
100	CWL-1	EITERMAN RD.	6011+21		RT												72								
100	CWL-2	EITERMAN RD.	6011+00		LT												40								
100	TLW-1	S.R. 161	45+55	46+50	RT													185							
100	TLY-1	S.R. 161	44+36	45+01	LT														226						
100	LA-1	S.R. 161	42+53		RT																		1		
100	LA-2	S.R. 161	42+61		RT																		1		
100	LA-3	S.R. 161	42+59		RT																		1		
100	LA-4	S.R. 161	43+74		LT															1					
100	LA-5	S.R. 161	44+52		LT															1					
100	LA-6	S.R. 161	44+53		LT															1					
100	LA-7	S.R. 161	44+55		LT															1					
100	LA-8	S.R. 161	45+41		RT															1					
100	LA-9	S.R. 161	45+55		RT															1					
100	LA-10	EITERMAN RD.	6010+69		RT																		1		
100	LA-11	EITERMAN RD.	6010+66		RT																		1		
100	LA-12	S.R. 161	44+40		RT															1					
100	LA-13	S.R. 161	44+48		RT															1					
TOTALS CARRIED TO GENERAL SUMMARY						71			95	1,914			1,773		1,338	245		112	411		8			5	
MILE									0.39				0.34												

CALCULATED BEB
CHECKED SDS

PAVEMENT MARKING SUBSUMMARY 1 OF 3

S.R. 161/ EITERMAN RD. ROUNDABOUT

O:\2013\2013945\UNI\60749\TRAFFIC\SHEETS\60749TS001.DGN
1/19/2015
10:40:46 AM
WFISHER

SHEET NO.	REFERENCE NO.	LOCATION	STATION FROM	STATION TO	SIDE	621 RPM TWO WAY (WHITE/RED) EACH	621 RPM TWO WAY (YELLOW/RED) EACH	621 RPM TWO WAY (YELLOW/YELLOW) EACH	644 EDGE LINE, 4" (WHITE) FT	644 EDGE LINE, 4" (YELLOW) FT	644 EDGE LINE, 6" (WHITE) FT	644 EDGE LINE, 6" (YELLOW) FT	644 LANE LINE, 4" FT	644 CENTER LINE, DOUBLE SOLID (YELLOW) FT	644 CHANNELIZING LINE, 8" FT	644 CHANNELIZING LINE, 12" FT	644 STOP LINE FT	644 CROSSWALK LINE, AS PER PLAN FT	644 TRANSVERSE/ DIAGONAL LINE (WHITE) FT	644 TRANSVERSE/ DIAGONAL LINE (YELLOW) FT	644 LANE ARROW EACH	644 DOTTED LINE, 8" FT	644 DOTTED LINE, 12" FT	647 LANE ARROW, TYPE A125 EACH	647 PAVEMENT MARKING, MISC.: YIELD LINE, TYPE A125 FT
100	DL-2	S.R. 161	45+10	45+47	LT																	51			
100	DL-3	S.R. 161	45+10	45+52	LT																	55			
100	DL-4	S.R. 161	45+11	45+52	LT																	47			
100	DLW-5	S.R. 161	45+45	45+62	LT																		65		
100	DL-6	S.R. 161	45+43	45+47	RT																	44			
100	DL-7	S.R. 161	45+21	45+62	RT																	43			
100	DLW-8	S.R. 161	45+27	45+86	RT																		65		
100	DLW-9	S.R. 161	43+71	44+05	RT																		43		
100	DL-10	S.R. 161	43+89	44+17	RT																	31			
100	DL-11	S.R. 161	43+80	44+22	RT																	46			
100	DL-12	S.R. 161	43+92	44+22	RT																	43			
100	YL-1	S.R. 161	45+53		LT																				14
100	YL-2	S.R. 161	45+59		LT																				14
100	YL-3	S.R. 161	45+65		LT																				14
100	YL-4	S.R. 161	45+43		RT																				20
100	YL-5	S.R. 161	45+27		RT																				14
100	YL-6	S.R. 161	43+87		RT																				14
100	YL-7	S.R. 161	43+78		RT																				14
100	YL-8	S.R. 161	43+69		RT																				14
101	CL-14	S.R. 161	46+50	46+67	LT	1									17										
101	CL-15	S.R. 161	46+50	46+67	LT	1									17										
101	CLW-16	RAMP W-S	801+07	801+87	LT	3										80									
101	CL-17	S.R. 161	48+56	49+35	RT	3									79										
101	CL-18	S.R. 161	46+50	47+36	RT	2									86										
101	ELW-2	S.R. 161	47+06	50+28	LT				322																
101	ELW-3	S.R. 161	50+31	50+62	LT						85														
101	ELW-4	S.R. 161	51+08	51+75	LT				67																
101	ELW-5	RAMP W-S	801+00	803+61	RT						261														
101	ELW-6	S.R. 161	49+35	51+75	RT				240																
101	ELW-7	S.R. 161 / RAMP W-S	46+50	801+00	RT/RT				198																
101	ELY-10	S.R. 161	46+50	50+97	LT					447															
101	ELY-10A	S.R. 161	50+77	51+06	LT		1					84													
101	ELY-11	RAMP W-S	801+87	803+61	LT/RT		2					174													
101	ELY-12	S.R. 161	46+50	50+97	RT					447															
101	LA-14	S.R. 161	46+52		LT																			1	
101	LA-15	S.R. 161	46+52		LT																			1	
101	LA-16	S.R. 161	46+53		LT																			1	
101	LL-10	S.R. 161	46+67	51+15	LT	7							448												
101	LL-11	S.R. 161	47+36	51+75	RT	6							439												
101	LL-9	S.R. 161	46+67	50+02	LT	5							335												
101	TLW-2	S.R. 161	46+50	48+52	RT														435						
101	SL-1	S.R. 161	50+68														80								
102	CL-19	S.R. 161	51+93	52+43	LT	3									50										
102	ELW-8	S.R. 161	51+75	53+22	LT				147																
102	ELW-9	S.R. 161	51+75	53+22	RT				147																
102	ELY-13	S.R. 161	51+93	53+22	LT					129															
102	ELY-14	S.R. 161	51+93	53+22	RT					129															
102	LA-17	S.R. 161	52+03		LT																1				
102	LL-12	S.R. 161	51+75	53+22	LT	2							147												
102	LL-13	S.R. 161	51+75	53+22	RT	2							147												
TOTALS CARRIED TO GENERAL SUMMARY						38			1,121	1,152	346	258	1,516		249	80	80		435		1	360	173	3	118
MILE									0.44		0.12		0.29												

CALCULATED BEB
CHECKED SDS

PAVEMENT MARKING SUBSUMMARY 2 OF 3

S.R. 161/ EITERMAN RD. ROUNDABOUT

\\KRN04\DATA\2013\2013945\INT\80748\TRAFFIC\SHEETS\80748TS002.DGN
1/19/2015
3:29:16 PM
MSUMMERVILLE

SHEET NO.	REFERENCE NO.	LOCATION	STATION FROM	STATION TO	SIDE	621 RPM TWO WAY (WHITE/RED) EACH	621 RPM TWO WAY (YELLOW/RED) EACH	621 RPM TWO WAY (YELLOW/YELLOW) EACH	644 EDGE LINE, 4" (WHITE) FT	644 EDGE LINE, 4" (YELLOW) FT	644 EDGE LINE, 6" (WHITE) FT	644 EDGE LINE, 6" (YELLOW) FT	644 LANE LINE, 4" FT	644 CENTER LINE, DOUBLE SOLID (YELLOW) FT	644 CHANNELIZING LINE, 8" FT	644 CHANNELIZING LINE, 12" FT	644 STOP LINE FT	644 CROSSWALK LINE, AS PER PLAN FT	644 TRANSVERSE/ DIAGONAL LINE (WHITE) FT	644 TRANSVERSE/ DIAGONAL LINE (YELLOW) FT	644 LANE ARROW EACH	644 DOTTED LINE, 8" FT	644 DOTTED LINE, 12" FT	647 LANE ARROW, TYPE A125 EACH	647 PAVEMENT MARKING, MISC.: YIELD LINE FT
103	CDS-1	EITERMAN RD	100+23	102+21	LT			3						198											
103	CDS-2	EITERMAN RD	6010+00	6010+11	LT									11											
103	CDS-3	EITERMAN RD	6010+00	6010+15	RT									15											
103	CDS-4	EITERMAN RD	100+14	102+21	RT			2						207											
103	ELW-10	EITERMAN RD	100+14	102+21	LT				207																
103	ELW-11	EITERMAN RD	6010+00	6010+35	LT				35																
103	ELW-12	EITERMAN RD	100+14	102+21	RT				207																
103	ELY-15	EITERMAN RD	6010+11	6010+50	LT					39															
103	ELY-16	EITERMAN RD	6010+15	6010+50	RT					35															
103	LL-14	EITERMAN RD	6010+15	6010+50	RT								35												
103	TLY-2	EITERMAN RD	6010+00	6010+50	LT															56					
103	TLY-3	EITERMAN RD	100+23	102+21	LT															196					
TOTALS CARRIED TO GENERAL SUMMARY							5		449	74			35	431					252						
MILE									0.10				0.01	0.09											

CALCULATED BEB
CHECKED SDS

PAVEMENT MARKING SUBSUMMARY 3 OF 3

S.R. 161/ EITERMAN RD. ROUNDABOUT

\\AKRNDA\DATA\2013\2013945\UNI\80748\TRAFFIC\SHEETS\80748TS003.DGN
1/19/2015
3:29:54 PM
MSUMMERVILLE

SHEET NO.	REFERENCE NO.	LOCATION	STATION	SIDE	CODE	SIZE (INCHES)	630 GROUND MOUNTED SUPPORT, NO. 3 POST, TYPE S, AS PER PLAN	630 SIGN POST REFLECTOR (RED)	630 SIGN, FLAT SHEET	630 SIGN, STREET NAME, AS PER PLAN	630 SIGNING MISC.: 2 1/4" SQUARE ANCHOR
							FT	EACH	SF	EACH	EACH
105	S-1	S.R. 161	36+32	CEN	W2-6-36	36" X 36"	15.58/15.58		9.00		2
					W16-17P-24	24" X 12			2.00		
					W13-1P-18	18" X 18			2.25		
105	S-2	S.R. 161	36+32	RT	W2-6-36	36" X 36"	15.58/15.58		9.00		2
					W16-17P-24	24" X 12			2.00		
					W13-1P-18	18" X 18			2.25		
106	S-3	S.R. 161	43+58	LT	SPECIAL	30" X 12"	11.00			1	2
106	S-4	S.R. 161	45+17	LT	R6-1R-36	36" X 12"	7.67		9.00		2
					R6-4-36	36" X 24"					
106	S-5	S.R. 161	45+36	LT	R1-2-48	48" X 48" X 48"	11.13/11.13		6.93		2
106	S-6	S.R. 161	45+74	LT	R1-2-48	48" X 48" X 48"	13.80/13.80		6.93		2
					SPECIAL	24" X 18"			3.00		
					R6-1R-36	36" X 12"			3.00		
106	S-7	S.R. 161	45+73	RT	SPECIAL	54" X 12"	11.00			1	2
106	S-8	S.R. 161	45+00	RT	R6-1R-36	36" X 12"	7.67		9.00		2
					R4-6-36	36" x 24"					
106	S-9	S.R. 161	45+76	RT	R1-2-48	48" X 48" X 48"	11.13/11.13		6.93		2
106	S-10	S.R. 161	45+22	RT	R1-2-48	48" X 48" X 48"	13.80/13.80		6.93		2
					SPECIAL	24" X 18"			3.00		
					R6-1R-36	36" X 12"			3.00		
106	S-10A	EITERMAN RD.	6011+04	RT	W11-2-36	36" X 36"	12.99		9.00		1
					W16-H7pL-24	24" X 12"			2.00		
106	S-11	EITERMAN RD.	6010+52	RT	SPECIAL	36" X 30"	10.17		7.50		1
106	S-12	S.R. 161	44+32	RT	SPECIAL	48" X 12"	11.00			1	2
106	S-12A	EITERMAN RD.	44+04	RT	W11-2-36	36" X 36"	12.99		9.00		1
					W16-H7pL-24	24" X 12"			2.00		
106	S-13	EITERMAN RD	6010+77	LT	SPECIAL						
106	S-14	S.R. 161	44+17	RT	R6-1R-36	36" X 12"	7.67		9.00		2
					R6-4-36	36" X 24"					
106	S-15	S.R. 161	43+76	RT	R1-2-48	48" X 48" X 48"	11.13/11.13		6.93		2
106	S-16	S.R. 161	43+58	RT	R1-2-48	48" X 48" X 48"	13.80/13.80		6.93		2
					SPECIAL	24" X 18"			3.00		
					R6-1R-36	24" X 12"			2.00		
106	S-17	S.R. 161	42+55	RT	SPECIAL	54" X 30"	10.17/10.17		11.25		2
TOTALS CARRIED TO GENERAL SUMMARY							320.4		152.8	3	33

CALCULATED BEB
CHECKED SDS

SIGNING SUBSUMMARY 1 OF 2

S.R. 161/ EITERMAN RD. ROUNDABOUT

\\KRN9A\DATA\2013\2813945\UNI\80748\TRAFFIC\SHEETS\80748TS004.DGN
3/10/2015
10:47:23 AM
JGR1MM

SHEET NO.	REFERENCE NO.	LOCATION	STATION	SIDE	CODE	SIZE (INCHES)	630 GROUND MOUNTED SUPPORT, NO. 3 POST, TYPE S, AS PER PLAN (FT)	630 SIGN POST REFLECTOR (RED) (EACH)	630 SIGN, FLAT SHEET (SF)	630 SIGN, STREET NAME, AS PER PLAN (EACH)	630 SIGNING MISC.: 2 1/4" SQUARE ANCHOR (EACH)
108	S-18	S.R. 161	46+64	LT	SPECIAL	54" X 30"	10.17/10.17		11.25		2
108	S-19	S.R. 161	49+00	LT	M3-4-24	24" X 12	10.75		2.00		1
					M1-5-24-3	30" X 24"			5.00		
108	S-20	S.R. 161	49+50	LT	W2-6-36	36" X 36"	14.58/14.58		9.00		2
					W16-17P-24	24" X 12			2.00		
					W13-1P-18	18" X 18			2.25		
108	S-21	S.R. 161	49+50	LT	W2-6-36	36" X 36"	14.58/14.58		9.00		2
					W16-17P-24	24" X 12			2.00		
					W13-1P-18	18" X 18			2.25		
108	S-22	S.R. 161	50+48	LT	R1-1-48	48" X 48"	13.25/13.25	2	9.00		2
					R5-1-36	36" X 36"			9.00		
					R6-1R-54	54" X 18			6.75		
					R6-1L-54	54" X 18			6.75		
108	S-23	S.R. 161	51+15	LT	R1-1-48	48" X 48"	11.67/11.67	2	9.00		2
					R5-1-36	36" X 36"			9.00		
108	S-24	S.R. 161	51+50	LT	M4-5-24	24" X 12"	11.84/11.84		2.00		2
					M1-1-24-3	24" X 12"			2.00		
					M3-4-24	24" X 12"			2.00		
					M1-5-24-3	30" X 24"			5.00		
					D1-H1a-72	72" X 12"			6.00		
108	S-25	S.R. 161	50+75	CEN	M3-2-24	24" X 12"	14.17/14.17		2.00		2
					M1-4-24-2	24" X 24"			4.00		
					M1-5-24-3	30" X 24"			5.00		
					M6-1L-21	21" X 15"			2.19		
108	S-26	S.R. 161	49+15	RT	W13-3-36	36" X 48"	11.67/11.67		12.00		2
111	S-27	EITERMAN RD	101+85	LT	R2-1-24	24" X 30"			5.00		
111	S-28	EITERMAN RD	100+51	RT	W2-6-36	36" X 36"	14.58/14.58		9.00		2
					W16-17P-24	24" X 12			2.00		
					W13-1P-18	18" X 18			2.25		
TOTALS CARRIED TO GENERAL SUMMARY							243.7	4	154.7		19

CALCULATED BEB
CHECKED SDS

SIGNING SUBSUMMARY 2 OF 2

S.R. 161/ EITERMAN RD. ROUNDABOUT

\\WKRN04\DATA\2013\2013945\UNIT\80748\TRAFFIC\SHEETS\80748TS005.DGN
1/19/2015
3:31:20 PM
MSUMMERVILLE

SHEET NO.	REFERENCE NO.	LOCATION	STATION	SIDE	CODE	SIZE (INCHES)	630 REMOVAL OF GROUND MOUNTED SIGN AND DISPOSAL EACH	630 REMOVAL OF GROUND MOUNTED SIGN AND REERECTION EACH	630 REMOVAL OF GROUND MOUNTED POST SUPPORT AND DISPOSAL EACH	630 REMOVAL OF GROUND MOUNTED POST SUPPORT AND REERECTION EACH	630 REMOVAL OF OVERHEAD MOUNTED SIGN AND DISPOSAL EACH	630 REMOVAL OF POLE MOUNTED SIGN AND DISPOSAL EACH	630 REMOVAL OF OVERHEAD SIGN SUPPORT AND DISPOSAL EACH
104	R-1A	S.R. 161		RT	D3-H1b(MOD.)		1		2				
105	R-1B	S.R. 161		CEN	D3-H1b		1		2				
107	R-1C	S.R. 161		RT	D3-H1b		1		2				
107	R-1	EITERMAN RD		LT	R7-1		1		1				
107	R-2	S.R. 161		RT	M1-5-3		1		2				
					M6-2		1						
					M2-H4		1						
107	R-3	S.R. 161		RT	SPECIAL			1		2			
107	R-4	S.R. 161		RT	R10-H6bL		1		1				
					SPECIAL		1						
107	R-4A	S.R. 161		RT	R3-2						1		
107	R-4B	S.R. 161		LT	R3-2		1		1				
107	R-4C	S.R. 161		LT	D3-H1b		1		2				
107	R-5	S.R. 161		RT	D3-1		1		2				
					D3-1		1						
					M1-5-3		1						
					M6-4		1						
					M1-4-2		1						
					M6-1L		1						
109	R-6	S.R. 161		LT	W6-3		1		1				
109	R-7	S.R. 161		LT	W3-3		1		1				
109	R-8	S.R. 161		LT	M3-4		1		1				
					M1-5-3		1						
109	R-9	S.R. 161		LT	W4-2L		1		1				
109	R-10	S.R. 161		LT	R6-1R		1		2				
					R6-1L		1						
					R5-1		1						
					R1-1		1						
109	R-11	S.R. 161		LT	R5-1		1		2				
					R1-1		1						
109	R-12	S.R. 161		LT	M4-5		1		2				
					M1-1-3		1						
					M3-2		1						
					M1-5-3		1						
					D1-H1a		1						
109	R-13	S.R. 161		LT	M3-2		1		1				
					M1-4-2		1						
					M1-5-3		1						
					M6-1L		1						
109	R-14	S.R. 161		RT	W13-3		1		2				
109	R-15	S.R. 161		RT	E1-H3						1		1
109	R-16	S.R. 161		RT	E1-H1						1		
109	R-17	S.R. 161		RT	W3-3							1	
109	R-18	S.R. 161		RT	R4-7b		1		1				
110	R-19	S.R. 161		LT	W9-1L		1		1				
111	R-20	S.R. 161		LT	R2-1		1		1				
TOTALS CARRIED TO GENERAL SUMMARY							41	1	31	2	3	1	1

CALCULATED BEB
CHECKED SDS

SIGNING REMOVAL SUBSUMMARY 1 OF 1

S.R. 161/ EITERMAN RD. ROUNDABOUT

\\KRN9A\DATA\2013\2813945\UNI\80748\TRAFFIC\SHEETS\8074TS006.DGN
1/19/2015
3:33:16 PM
MSUMERVILLE

SHEET NO.	REFERENCE NO.	LOCATION	STATION	SIDE	DETAIL PAGE	625 GROUND ROD	630 OVERHEAD SIGN SUPPORT, TYPE TC-12.30, DESIGN 3	630 OVERHEAD SIGN SUPPORT, TYPE TC-12.30, DESIGN 7	630 OVERHEAD SIGN SUPPORT, TYPE TC-15.115	630 SIGN, OVERHEAD EXTRUSHEET	630 RIGID OVERHEAD SIGN SUPPORT FOUNDATION
						EACH	EACH	EACH	EACH	SF	EACH
105	OSS-1	S.R. 161 EASTBOUND	40+40	RT	112	1		1		180.0	1
105	OSS-2	S.R. 161 EASTBOUND	37+92	RT	113	1	1			66.0	1
108	OSS-4	S.R. 161 EASTBOUND	48+50	RT	114	2			1	151.0	2
108	OSS-3	S.R. 161 WESTBOUND	48+50	LT	115					85.0	
TOTALS CARRIED TO GENERAL SUMMARY						4	1	1	1	482.0	4

CALCULATED BEB
CHECKED SDS

OVERHEAD SIGN SUBSUMMARY 1 OF 1

S.R. 161/EITERMAN RD. ROUNDABOUT

\\AKRNOA\DATA\2013\2013945\INI\80748\TRAFFIC\SHEETS\80748TS007.DGN
1/19/2015
3:35:03 PM
HSUMMERVILLE

LEGEND			
ELY-#	EDGE LINE, YELLOW, 4"	TLY-#	TRANSVERSE LINE, YELLOW, 24"
ELW-#	EDGE LINE, WHITE, 4"	TLW-#	TRANSVERSE LINE, WHITE, 24"
LL-#	LANE LINE, 4"	YL-#	YIELD LINE (SEE DETAIL ON SHEET 91)
CDS-#	CENTER LINE, DOUBLE SOLID, 4"	CWL-#	CROSSWALK LINE, 12" (SEE DETAIL ON SHEET 91)
CL-#	CHANNELIZING LINE, 8"	SL-#	STOP LINE, 24"
DL-#	8" DOTTED LINE, WHITE (6' LONG, 6' GAP)	→	TRAFFIC FLOW ARROW
LA-#	LANE ARROW, 72"		RPM, TWO WAY (WHITE/RED)
DLW-#	12" DOTTED WHITE (3' LONG, 3' GAP)		RPM, TWO WAY (YELLOW/RED)
CLW-#	12" CHANNELIZING LINE, WHITE		RPM, TWO WAY (YELLOW/YELLOW)

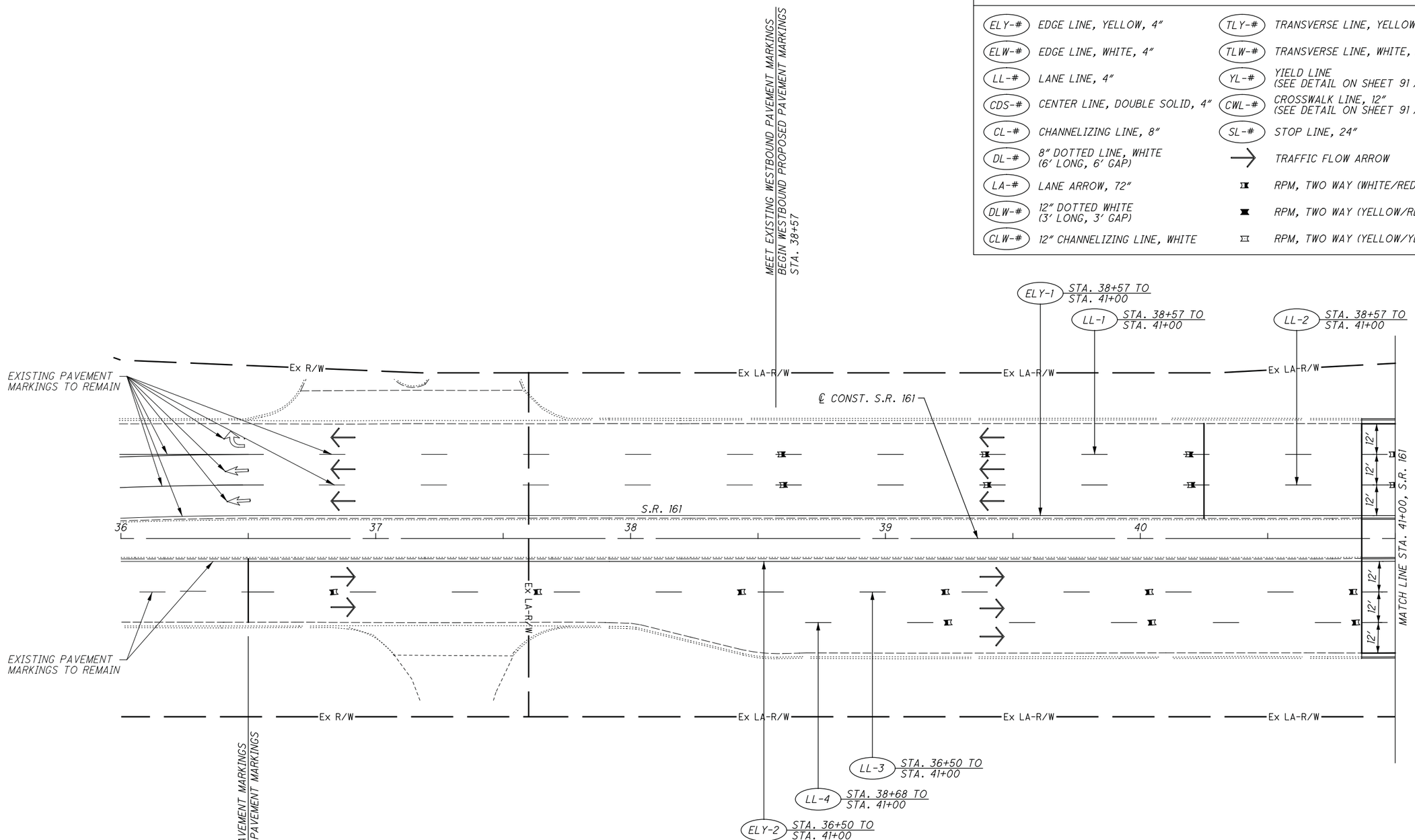

FOR SIGNING PLANS SEE SHEET 105.

HORIZONTAL SCALE IN FEET 0 10 20 40

CALCULATED BEB
CHECKED AKF

PAVEMENT MARKING PLAN
BEGIN TO STA. 41+00 (S.R. 161)

S.R. 161/ EITERMAN RD. ROUNDABOUT

G:\2013\2013945\UNI\80748\TRAFFIC\SHEETS\80748TP001.DGN
1/19/2015
12:04:10 PM
WFISHER

LEGEND			
ELY-#	EDGE LINE, YELLOW, 4"	TLY-#	TRANSVERSE LINE, YELLOW, 24"
ELW-#	EDGE LINE, WHITE, 4"	TLW-#	TRANSVERSE LINE, WHITE, 24"
LL-#	LANE LINE, 4"	YL-#	YIELD LINE (SEE DETAIL ON SHEET 91)
CDS-#	CENTER LINE, DOUBLE SOLID, 4"	CWL-#	CROSSWALK LINE, 12" (SEE DETAIL ON SHEET 91)
CL-#	CHANNELIZING LINE, 8"	SL-#	STOP LINE, 24"
DL-#	8" DOTTED LINE, WHITE (6' LONG, 6' GAP)	→	TRAFFIC FLOW ARROW
LA-#	LANE ARROW, 72"		RPM, TWO WAY (WHITE/RED)
DLW-#	12" DOTTED WHITE (3' LONG, 3' GAP)		RPM, TWO WAY (YELLOW/RED)
CLW-#	12" CHANNELIZING LINE, WHITE		RPM, TWO WAY (YELLOW/YELLOW)

FOR SIGNING PLAN SEE SHEET 106 & 107.

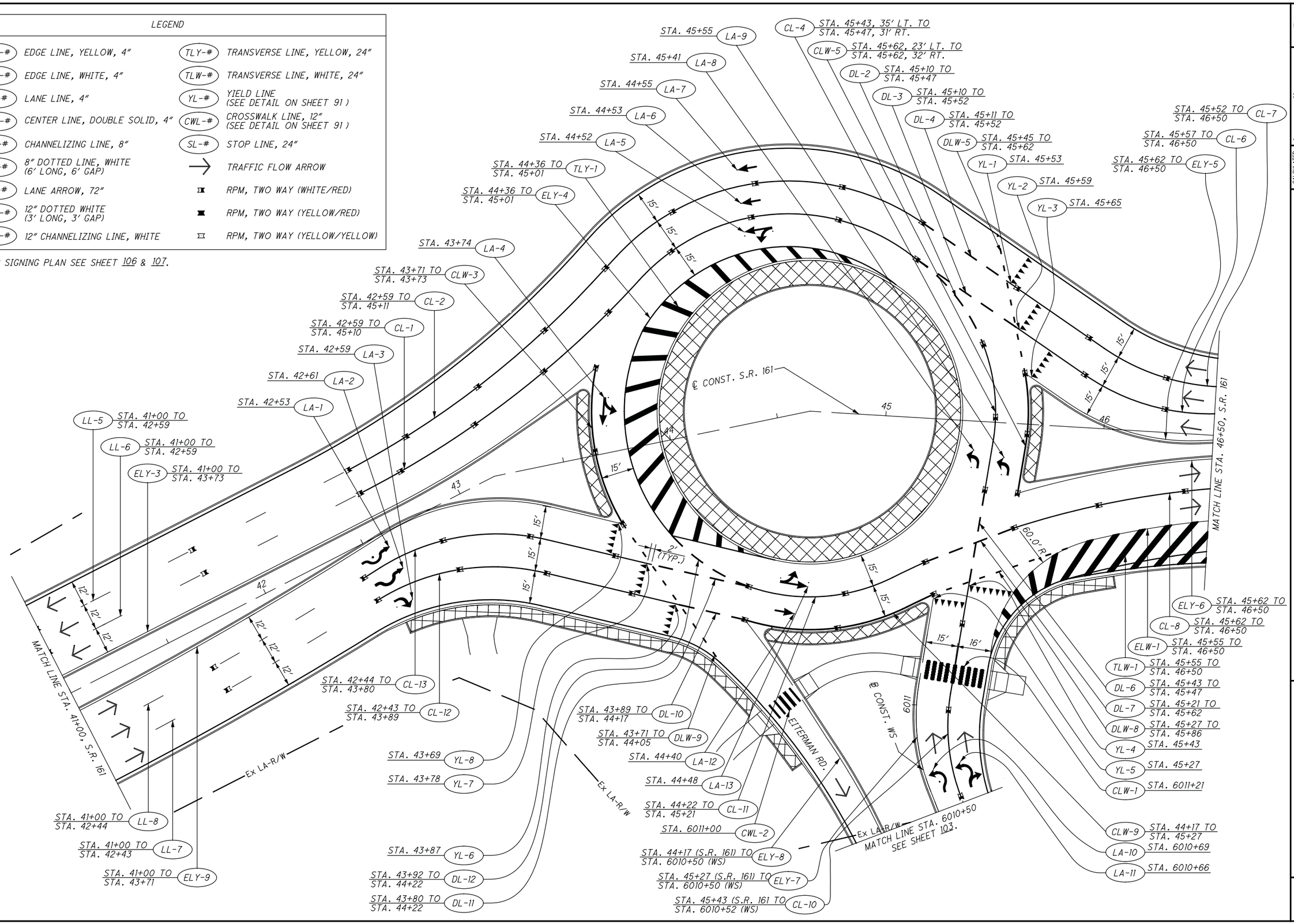

N

HORIZONTAL SCALE IN FEET 0 10 20 40

CALCULATED BEB
CHECKED AKF

PAVEMENT MARKING PLAN STA. 41+00 TO STA. 46+50 (S.R. 161)

S.R. 161/ EITERMAN RD. ROUNDABOUT

O:\2013\2013945\UNI\80748\TRAFFIC\SHEETS\80748TP002.DGN
1/19/2015
12:02:08 PM
WFISHER

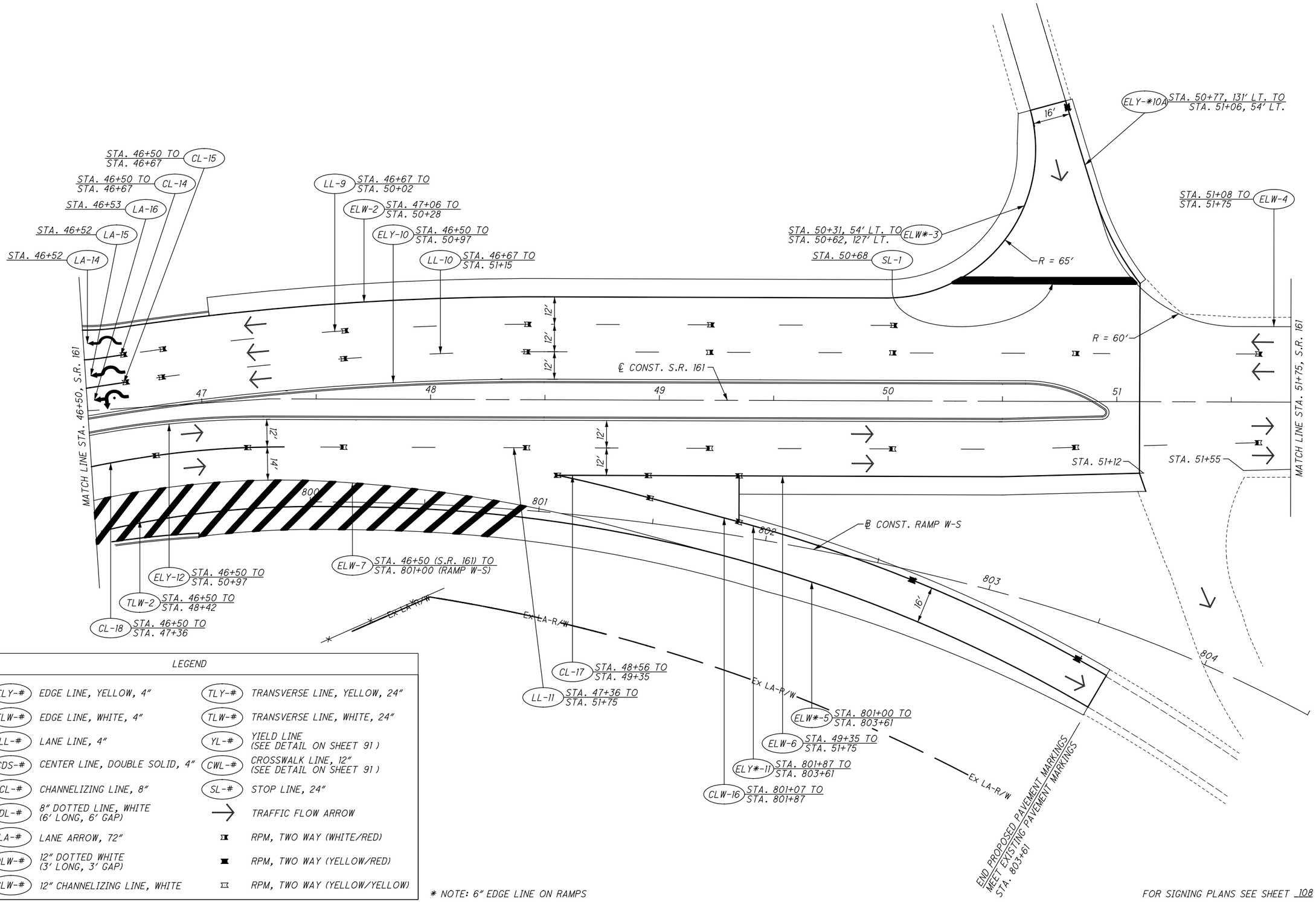

LEGEND

ELY-#	EDGE LINE, YELLOW, 4"	TLY-#	TRANSVERSE LINE, YELLOW, 24"
ELW-#	EDGE LINE, WHITE, 4"	TLW-#	TRANSVERSE LINE, WHITE, 24"
LL-#	LANE LINE, 4"	YL-#	YIELD LINE (SEE DETAIL ON SHEET 91)
CDS-#	CENTER LINE, DOUBLE SOLID, 4"	CWL-#	CROSSWALK LINE, 12" (SEE DETAIL ON SHEET 91)
CL-#	CHANNELIZING LINE, 8"	SL-#	STOP LINE, 24"
DL-#	8" DOTTED LINE, WHITE (6' LONG, 6' GAP)	→	TRAFFIC FLOW ARROW
LA-#	LANE ARROW, 72"		RPM, TWO WAY (WHITE/RED)
DLW-#	12" DOTTED WHITE (3' LONG, 3' GAP)		RPM, TWO WAY (YELLOW/RED)
CLW-#	12" CHANNELIZING LINE, WHITE		RPM, TWO WAY (YELLOW/YELLOW)

* NOTE: 6" EDGE LINE ON RAMPS

FOR SIGNING PLANS SEE SHEET 108 & 109.

HORIZONTAL SCALE IN FEET 0 10 20 40

CALCULATED BEB
CHECKED AKF

PAVEMENT MARKING PLAN
STA. 46+50 TO STA. 51+75 (S.R.161)

S.R. 161/EITERMAN RD. ROUNDABOUT

D:\2013\2013945\UNI\80748\TRAFFIC\SHEETS\80748TP003.DGN
1/19/2015
12:08:24 PM
WFISHER

LEGEND			
ELY-#	EDGE LINE, YELLOW, 4"	TLY-#	TRANSVERSE LINE, YELLOW, 24"
ELW-#	EDGE LINE, WHITE, 4"	TLW-#	TRANSVERSE LINE, WHITE, 24"
LL-#	LANE LINE, 4"	YL-#	YIELD LINE (SEE DETAIL ON SHEET 91)
CDS-#	CENTER LINE, DOUBLE SOLID, 4"	CWL-#	CROSSWALK LINE, 12" (SEE DETAIL ON SHEET 91)
CL-#	CHANNELIZING LINE, 8"	SL-#	STOP LINE, 24"
DL-#	8" DOTTED LINE, WHITE (6' LONG, 6' GAP)	→	TRAFFIC FLOW ARROW
LA-#	LANE ARROW, 72"		RPM, TWO WAY (WHITE/RED)
DLW-#	12" DOTTED WHITE (3' LONG, 3' GAP)		RPM, TWO WAY (YELLOW/RED)
CLW-#	12" CHANNELIZING LINE, WHITE		RPM, TWO WAY (YELLOW/YELLOW)

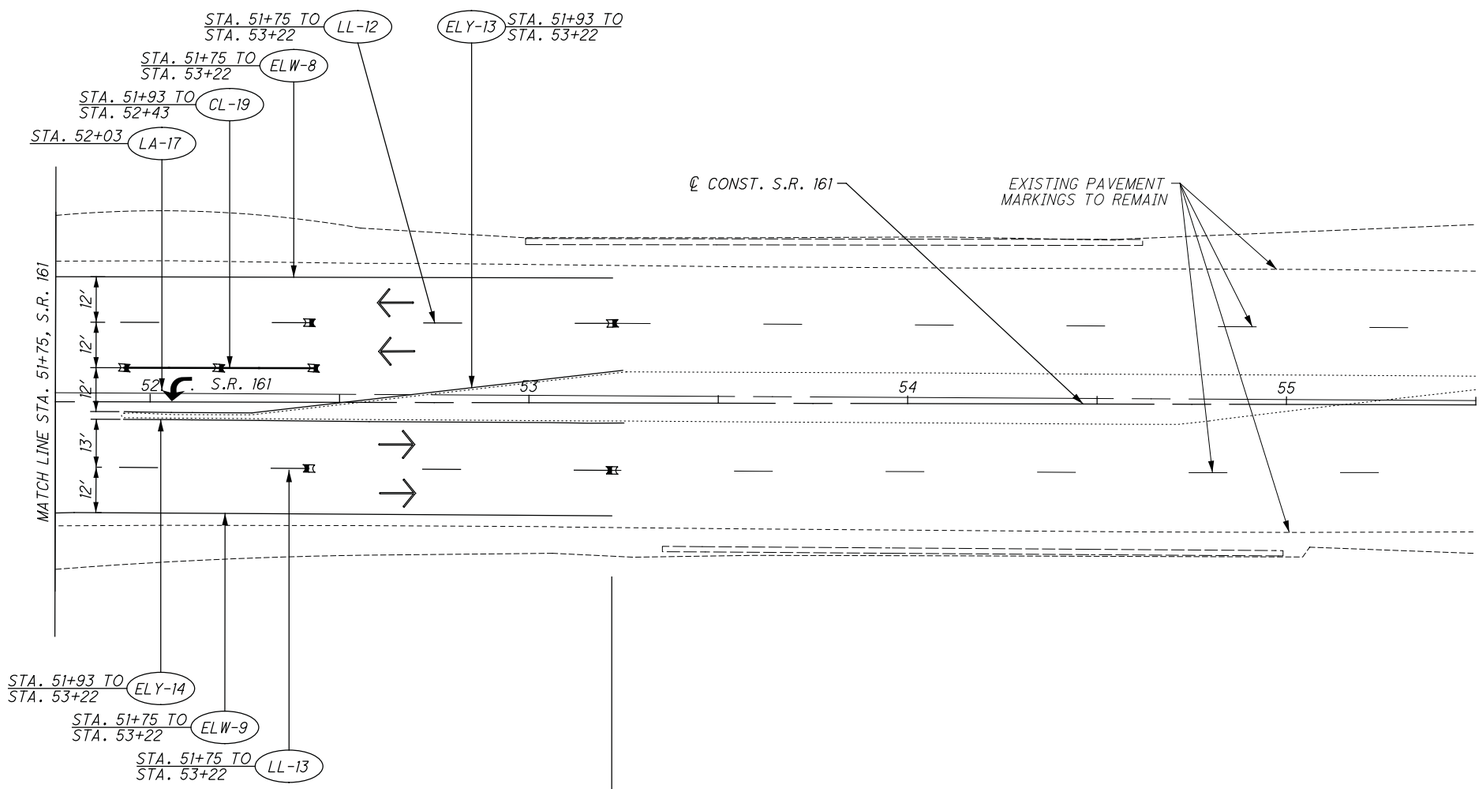

FOR SIGNING PLANS SEE SHEET 110 .

HORIZONTAL SCALE IN FEET 0 10 20 40

CALCULATED BEB
CHECKED AKF

PAVEMENT MARKING PLAN
STA. 51+75 TO END (S.R.161)

S.R. 161/ EITERMAN RD. ROUNDABOUT

O:\2013\2013945\INT\80749\TRAFFIC\SHEETS\80749TP004.DGN
1/19/2015
12:10:00 PM
WFISHER

LEGEND			
ELY-#	EDGE LINE, YELLOW, 4"	TLY-#	TRANSVERSE LINE, YELLOW, 24"
ELW-#	EDGE LINE, WHITE, 4"	TLW-#	TRANSVERSE LINE, WHITE, 24"
LL-#	LANE LINE, 4"	YL-#	YIELD LINE (SEE DETAIL ON SHEET 91)
CDS-#	CENTER LINE, DOUBLE SOLID, 4"	CWL-#	CROSSWALK LINE, 12" (SEE DETAIL ON SHEET 91)
CL-#	CHANNELIZING LINE, 8"	SL-#	STOP LINE, 24"
DL-#	8" DOTTED LINE, WHITE (6' LONG, 6' GAP)	→	TRAFFIC FLOW ARROW
LA-#	LANE ARROW, 72"		RPM, TWO WAY (WHITE/RED)
DLW-#	12" DOTTED WHITE (3' LONG, 3' GAP)		RPM, TWO WAY (YELLOW/RED)
CLW-#	12" CHANNELIZING LINE, WHITE		RPM, TWO WAY (YELLOW/YELLOW)

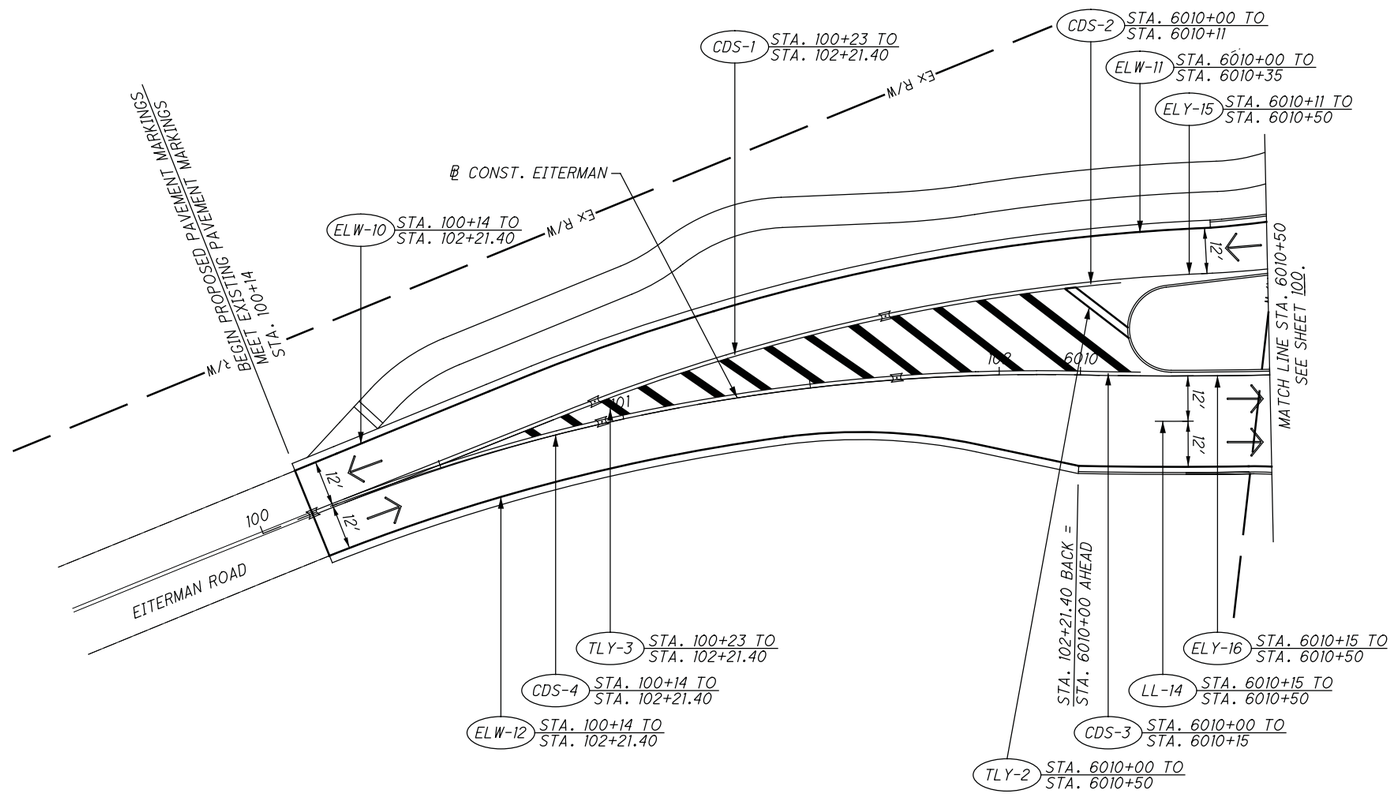

FOR SIGNING PLANS SEE SHEET 111 .

HORIZONTAL SCALE IN FEET 0 10 20 40

CALCULATED BEB
CHECKED AKF

PAVEMENT MARKING PLAN
BEGIN TO STA. 6010+50 (EITERMAN ROAD)

S.R. 161/ EITERMAN RD. ROUNDABOUT

G:\2013\2013945\UNI\80748\TRAFFIC\SHEETS\80748TP005.DGN
1/19/2015
12:07:21 PM
WFISHER

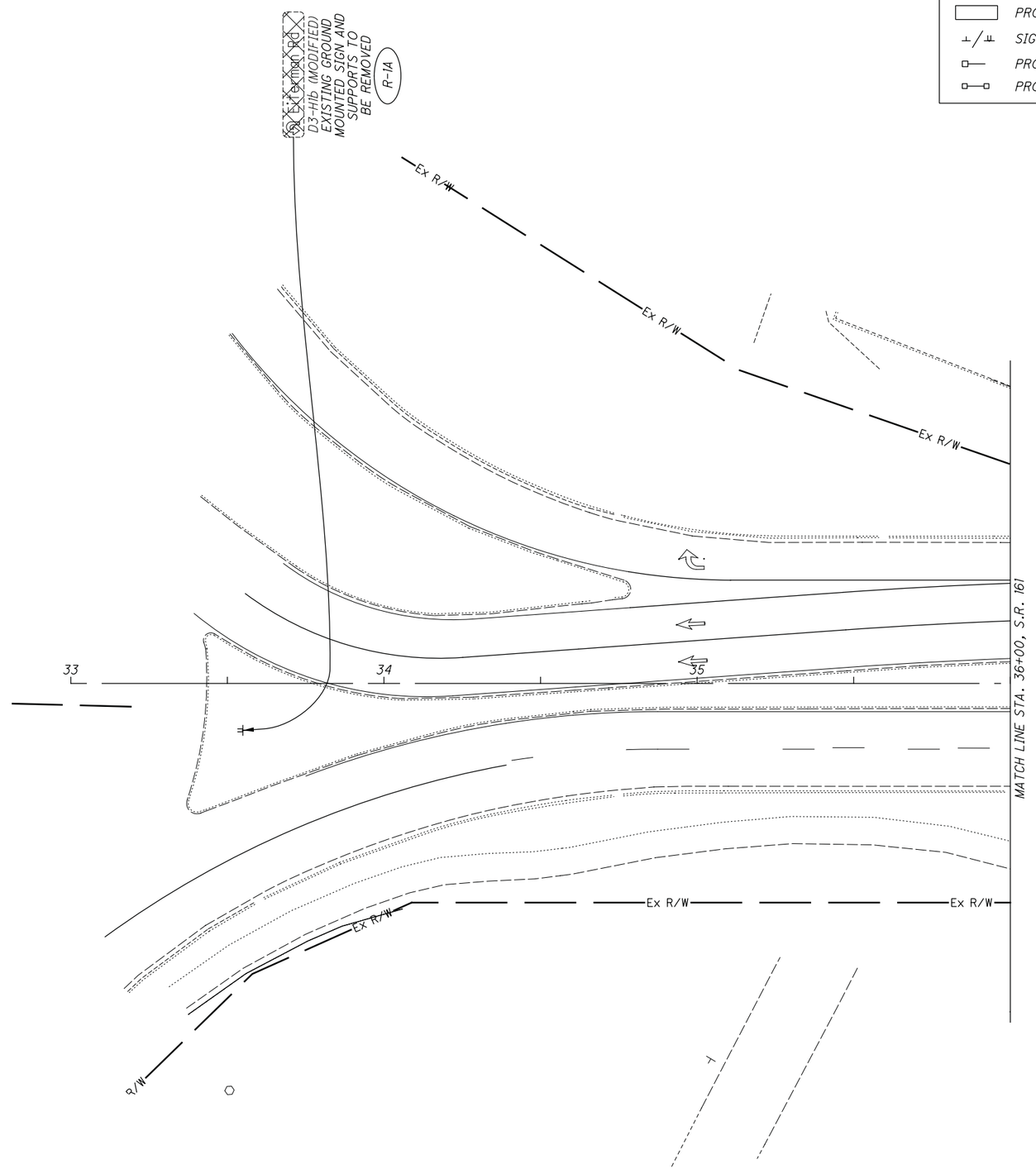

LEGEND

EXISTING SIGN TO REMAIN	R-# EXISTING SIGN TO BE REMOVED
EXISTING SIGN TO BE REMOVED	S-# PROPOSED GROUND MOUNTED SIGN
PROPOSED SIGN	OSS-# PROPOSED OVERHEAD SIGN
SIGN, GROUND MOUNTED	TRAFFIC FLOW ARROW
PROPOSED CANTILEVER SUPPORT	
PROPOSED TRUSS SUPPORT	

HORIZONTAL SCALE IN FEET 0 10 20 40

CALCULATED BEB
CHECKED AKF

SIGNING PLAN
BEGIN TO STA. 36+00 (S.R. 161)

S.R. 161/EITERMAN RD. ROUNDABOUT

NOTE: 1. ALL SIGNS NOT SPECIFIED FOR REMOVAL SHALL REMAIN

D:\2013\2013945\UNI\80748\TRAFFIC\SHEETS\80748TP001A.DGN
1/19/2015
12:02:59 PM
WFISHER

FOR PAVEMENT MARKING PLAN SEE SHEET 99.

LEGEND			
	EXISTING SIGN TO REMAIN	R-#	EXISTING SIGN TO BE REMOVED
	EXISTING SIGN TO BE REMOVED	S-#	PROPOSED GROUND MOUNTED SIGN
	PROPOSED SIGN	OSS-#	PROPOSED OVERHEAD SIGN
	SIGN, GROUND MOUNTED		TRAFFIC FLOW ARROW
	PROPOSED CANTILEVER SUPPORT		
	PROPOSED TRUSS SUPPORT		

HORIZONTAL SCALE IN FEET 0 10 20 40

CALCULATED BEB
CHECKED AKF

SIGNING PLAN
STA. 36+00 TO STA. 41+00, (S.R. 161)

S.R. 161/ EITERMAN RD. ROUNDABOUT

O:\2013\2013945\UNI\80746\TRAFFIC\SHEETS\80746TP011.DGN
1/19/2015
12:10:52 PM
WFISHER

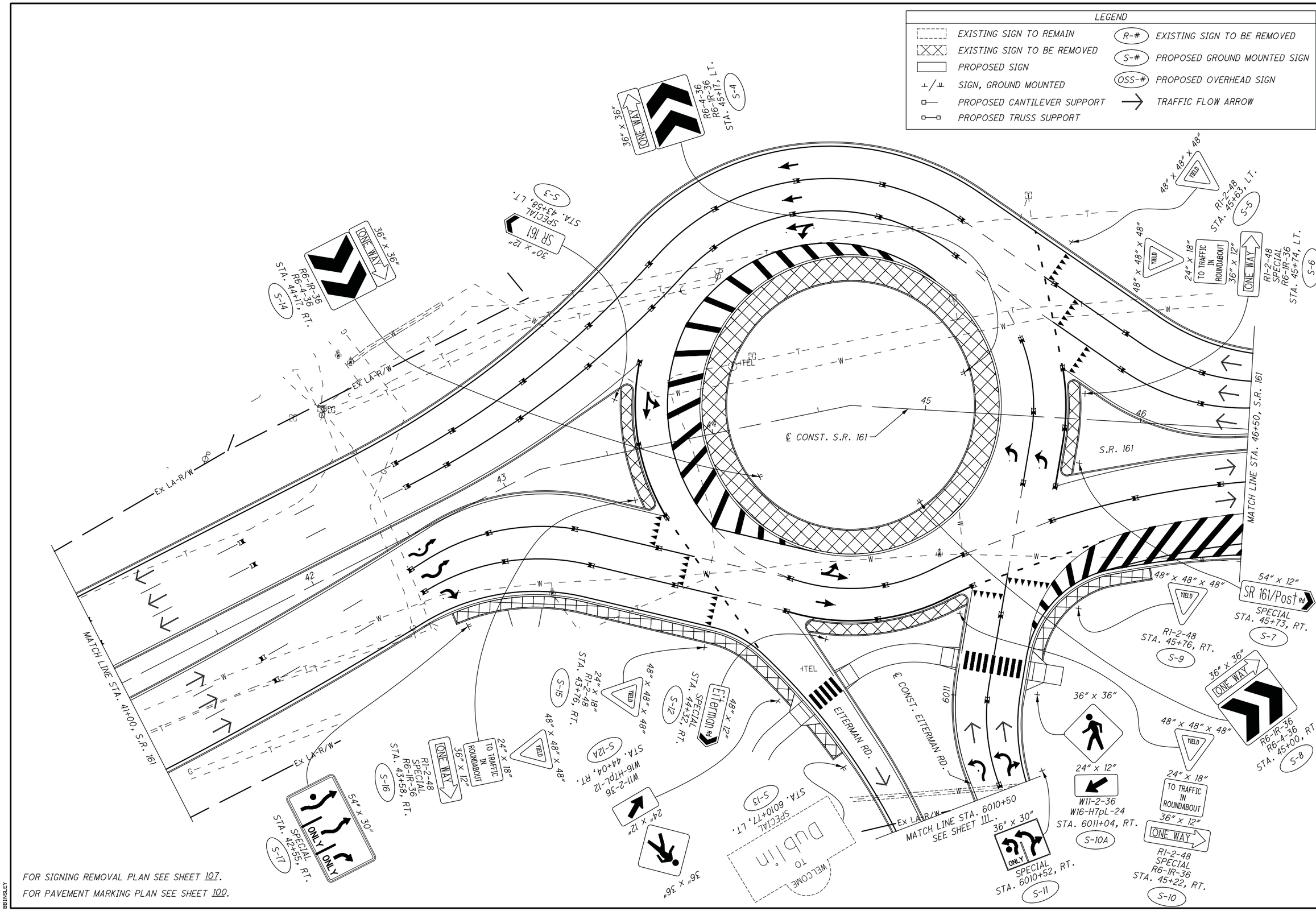

O:\2013\2013945\UNI\80749\TRAFFIC\SHEETS\80749TP012.DGN
1/30/2015
10:43:58 AM
BBINSLEY

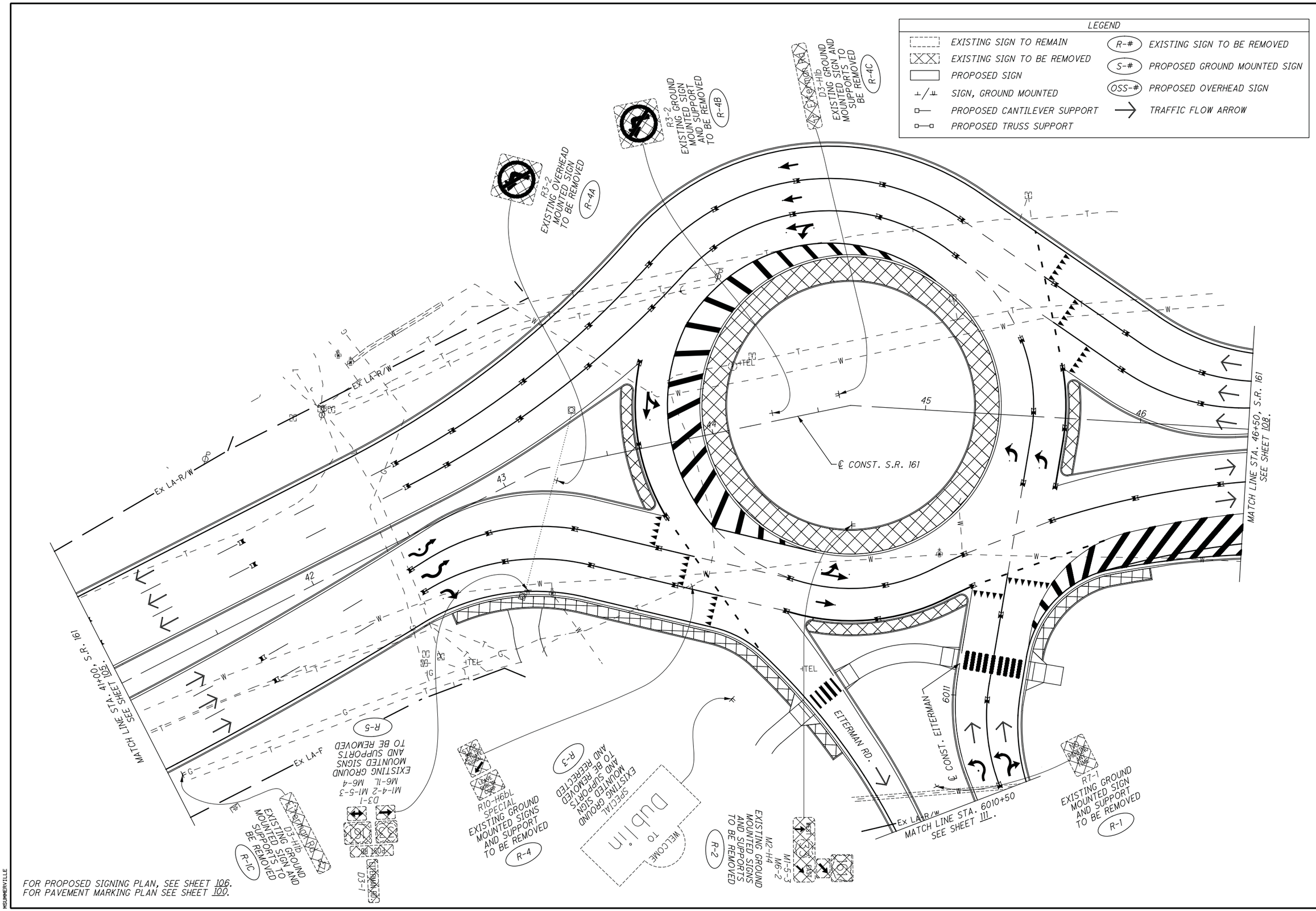

FOR PROPOSED SIGNING PLAN, SEE SHEET 106.
FOR PAVEMENT MARKING PLAN SEE SHEET 100.

SIGNING REMOVAL PLAN
STA. 41+00 TO STA. 46+50 (S.R. 161)

S.R. 161/ EITERMAN RD. ROUNDABOUT

CALCULATED BEB
CHECKED AKF

\\WKRNA\DATA\2013\2013945\UNIT\80748\TRAFFIC\SHEETS\80748P012R.DGN
1/19/2015
3:20:54 PM
MSUMMERVILLE

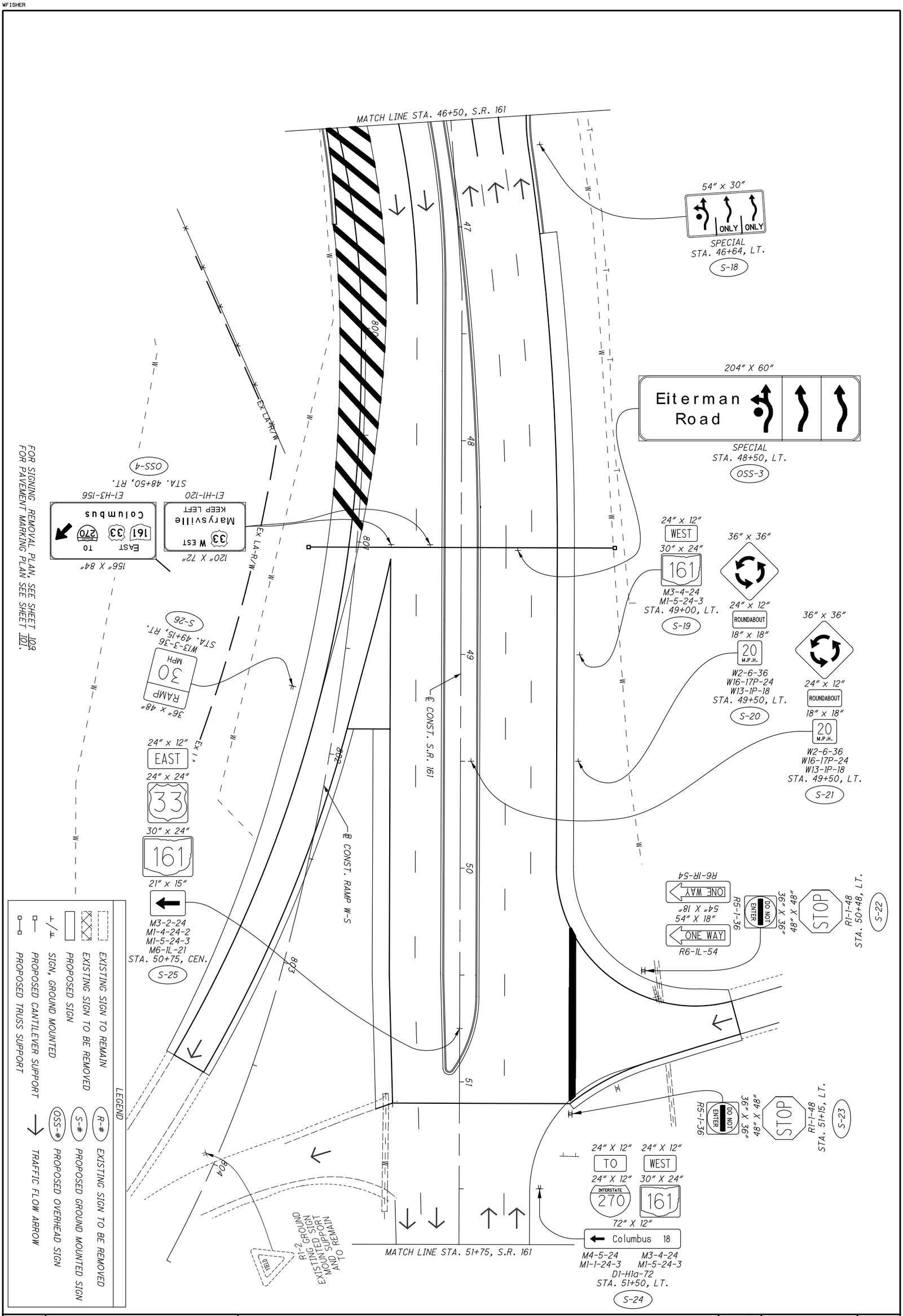

108 / 128	S.R. 161/ EITERMAN RD. ROUNDABOUT	PROPOSED SIGNING PLAN STA. 46+50 TO STA. 51+75 (S.R. 161)	CALCULATED BEB / CHECKED AKF	HORIZONTAL SCALE IN FEET 0 10 20 40

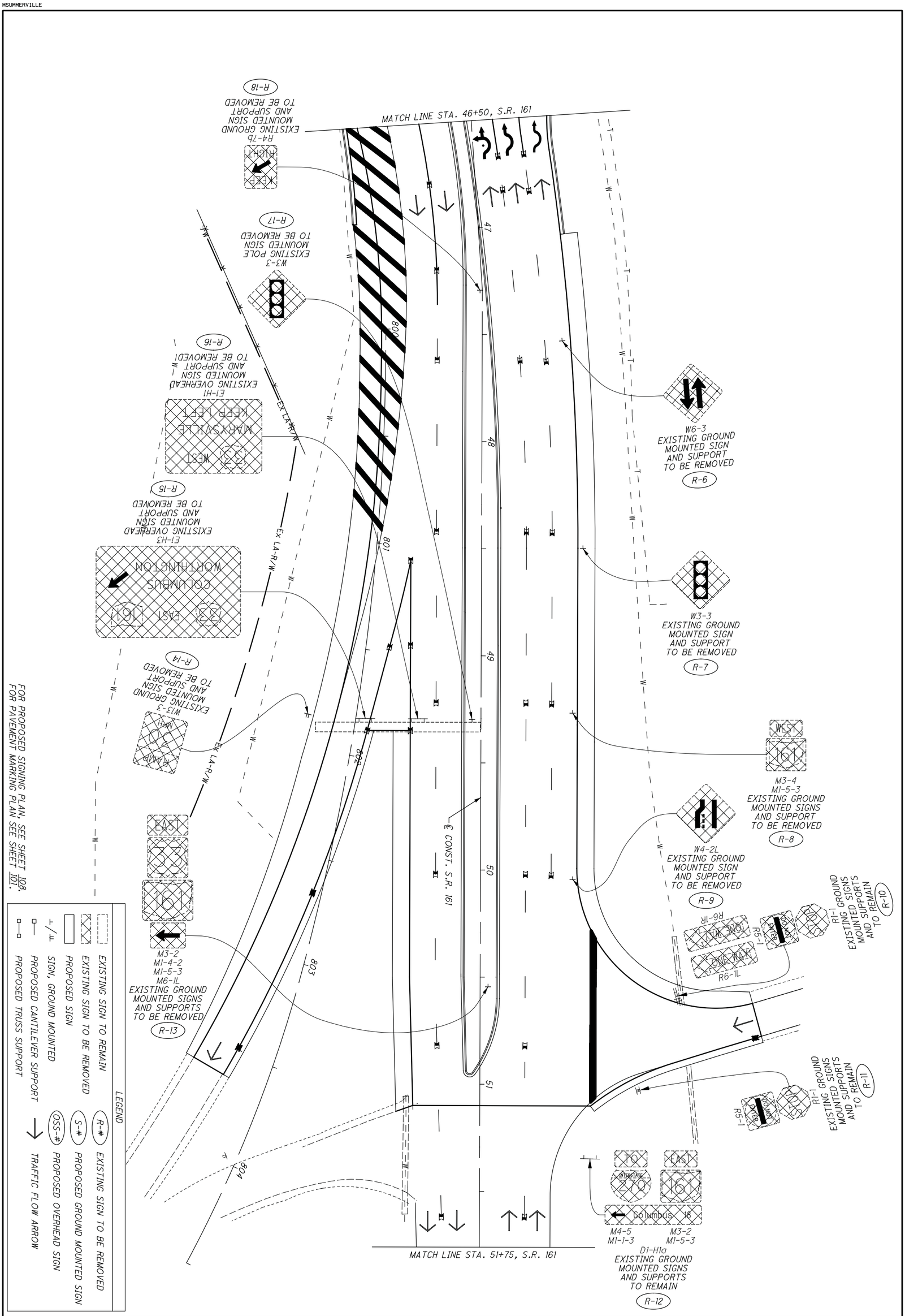

FOR PROPOSED SIGNING PLAN, SEE SHEET 108.
FOR PAVEMENT MARKING PLAN SEE SHEET 101.

109 / 128	S.R. 161/EITERMAN RD. ROUNDABOUT	SIGNING REMOVAL PLAN STA. 46+50 TO STA. 51+75 (S.R. 161)	CALCULATED BEB / CHECKED AKF	0 10 20 40 HORIZONTAL SCALE IN FEET

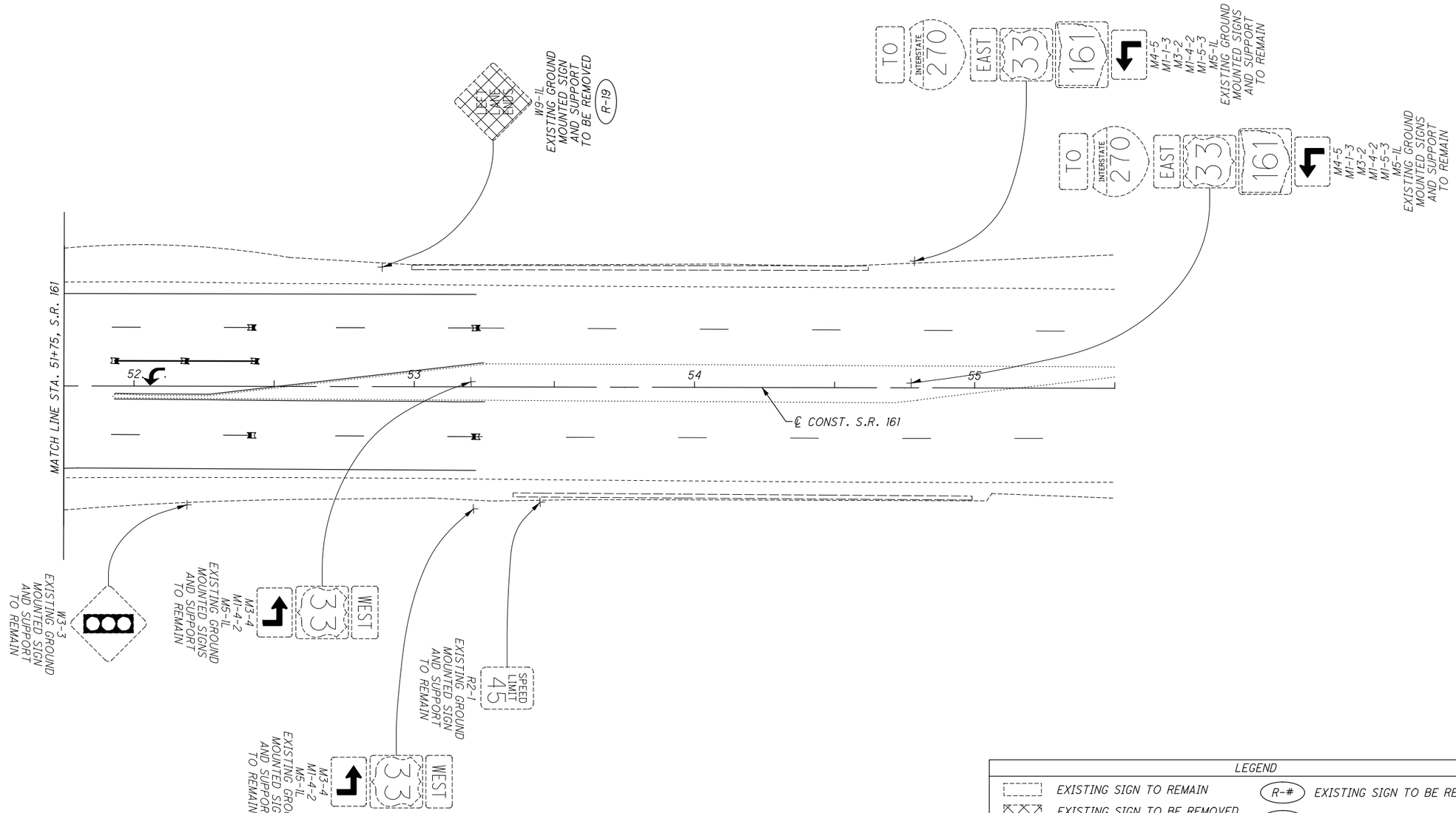

LEGEND

	EXISTING SIGN TO REMAIN	R-#	EXISTING SIGN TO BE REMOVED
	EXISTING SIGN TO BE REMOVED	S-#	PROPOSED GROUND MOUNTED SIGN
	PROPOSED SIGN	OSS-#	PROPOSED OVERHEAD SIGN
⊥/⊥	SIGN, GROUND MOUNTED	→	TRAFFIC FLOW ARROW
	PROPOSED CANTILEVER SUPPORT		
	PROPOSED TRUSS SUPPORT		

FOR PAVEMENT MARKING PLAN SEE SHEET 102.

N

0 10 20 40
HORIZONTAL SCALE IN FEET

CALCULATED BEB
CHECKED AKF

SIGNING PLAN
STA. 51+75 TO END (S.R. 161)

S.R. 161/ EITERMAN RD. ROUNDABOUT

\\AKRN04\DATA\2013\2013945\UNI\80748\TRAFFIC\SHEETS\80748TP014.DGN
1/19/2015
3:26:02 PM
MSUMMERVILLE

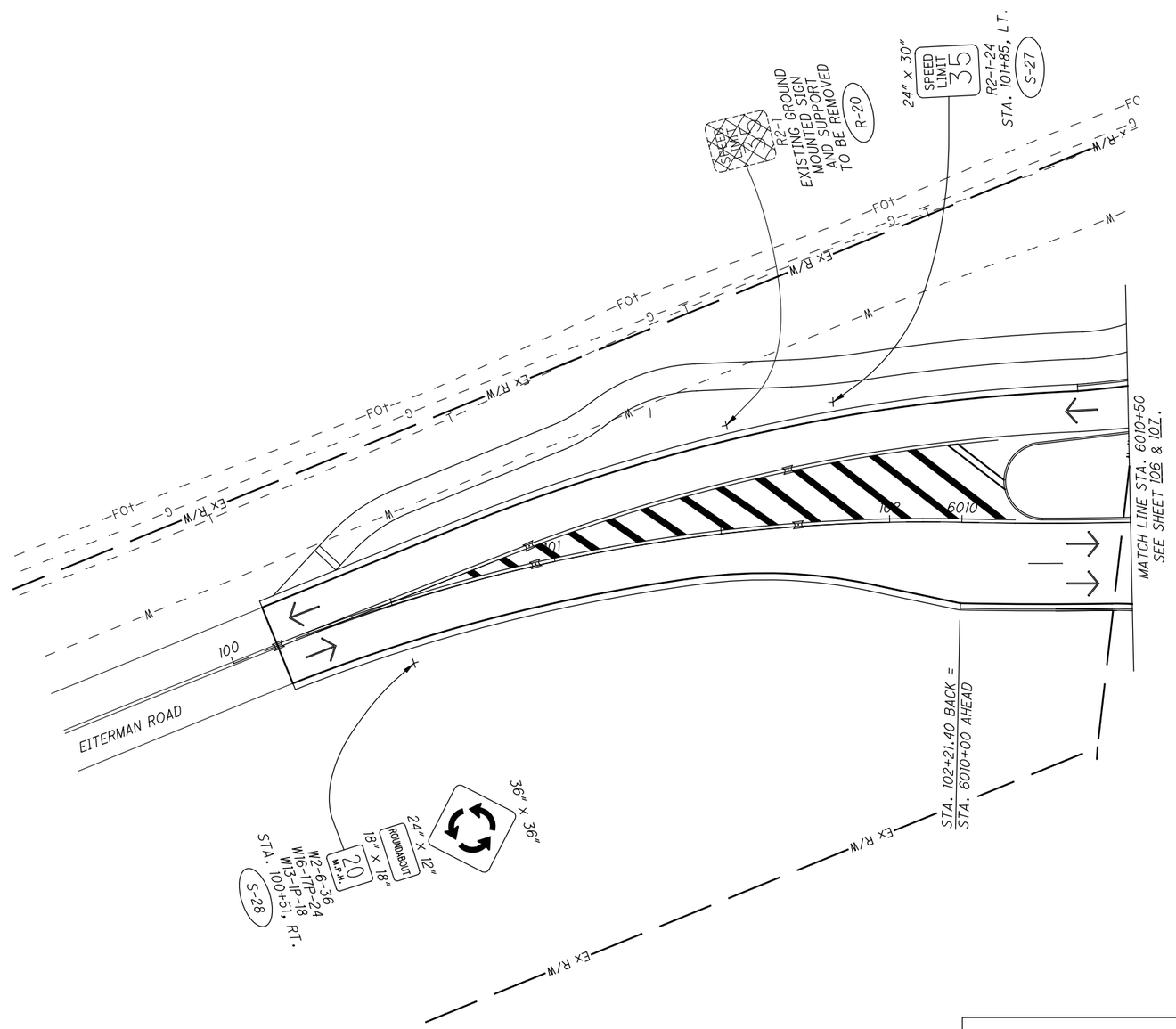

LEGEND			
	EXISTING SIGN TO REMAIN	(R-#)	EXISTING SIGN TO BE REMOVED
	EXISTING SIGN TO BE REMOVED	(S-#)	PROPOSED GROUND MOUNTED SIGN
	PROPOSED SIGN	(OSS-#)	PROPOSED OVERHEAD SIGN
⊥/⊥	SIGN, GROUND MOUNTED	→	TRAFFIC FLOW ARROW
	PROPOSED CANTILEVER SUPPORT		
	PROPOSED TRUSS SUPPORT		

FOR PAVEMENT MARKING PLAN SEE SHEET 103.

0 10 20 40
HORIZONTAL SCALE IN FEET

CALCULATED BEB
CHECKED AKF

SIGNING PLAN
BEGIN TO STA. 6010+50 (EITERMAN RD.)

S.R. 161/EITERMAN RD. ROUNDABOUT

\\AKRNB\A\DATA\2013\2013945\UNIT\80748\TRAFFIC\SHEETS\80748TP015.DGN
1/19/2015
3:26:52 PM
MSUMMERVILLE

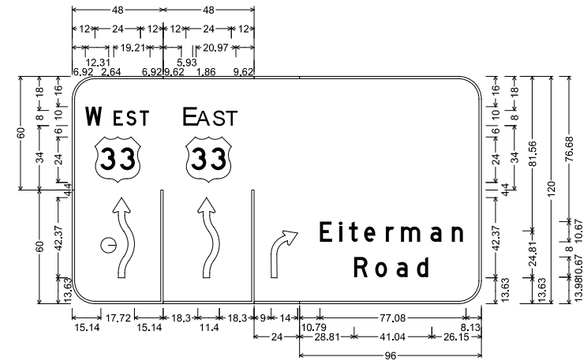

PANEL A
N.T.S.

PANEL A	
DESIGN LEVEL:	3
TEXT FONT:	CLEARVIEWHWY
PANEL SIZE:	18′ X 10′
BACKGROUND:	GREEN
FILL COLOR:	WHITE
NUMBER OF BRACKETS:	3
SIGN SUPPORT INFORMATION	
TOTAL SIGN AREA:	180 SQ. FT.
TOTAL ℄ TO ℄ LENGTH:	15.0 FT.
DESIGN TYPE:	TC-12.30, DESIGN 7

SUPPORT FOUNDATION INFORMATION

SUPPORT TYPE	DESIGN NUMBER	FOUNDATION DEPTH	FOUNDATION DIAMETER
TC-12.30	7	15.0′	36″

NOTES:
1. CONTRACTOR SHALL FIELD VERIFY EXISTING ELEVATIONS PRIOR TO THE ORDERING OF ANY MATERIALS.
2. ALL SIGNS ARE VIEWED IN THE DIRECTION OF TRAVEL.
3. CONTRACTOR SHALL LOCATE ALL UNDERGROUND UTILITIES IN FIELD PRIOR TO ANY EXCAVATION.

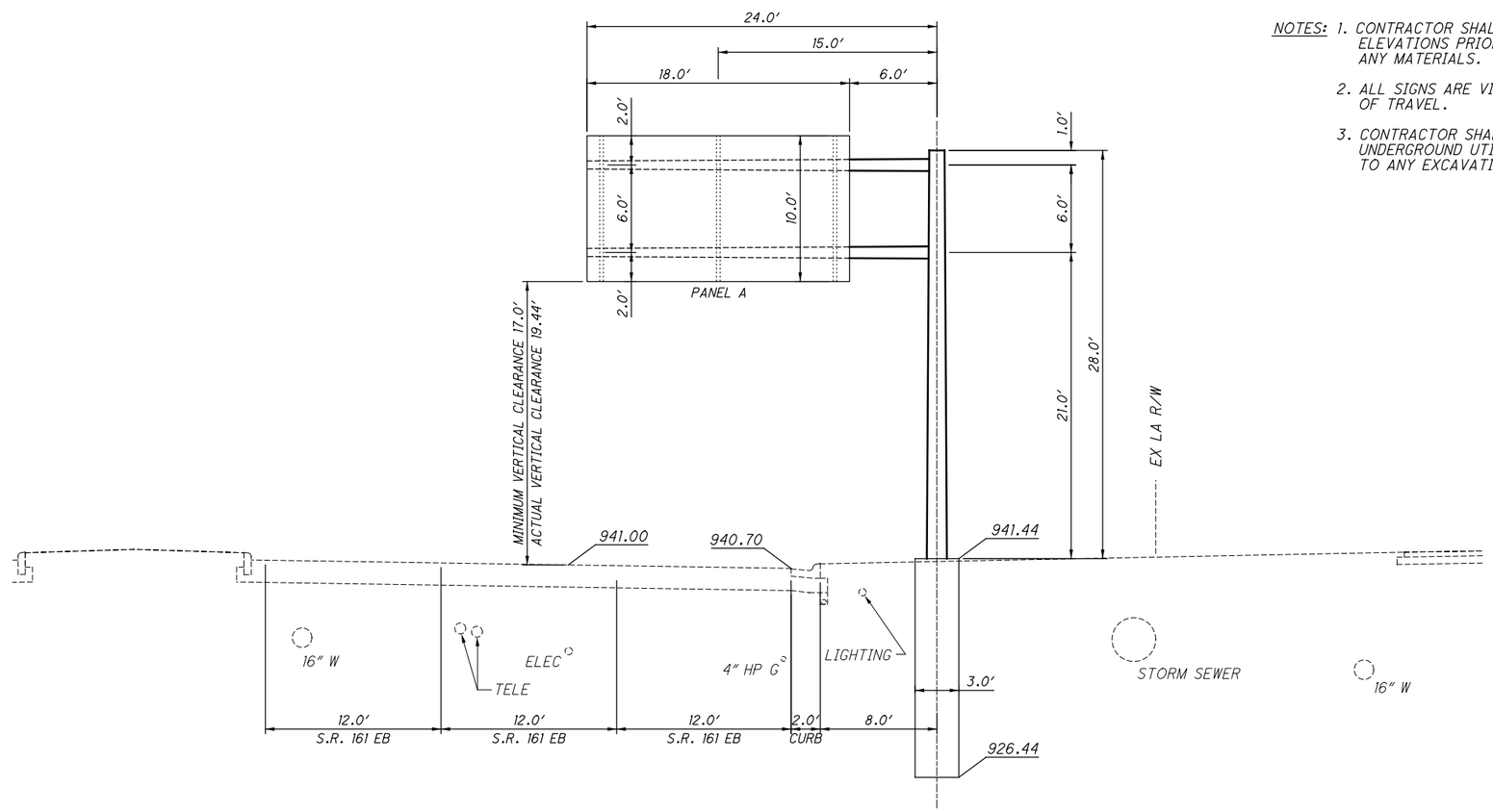

OSS-1 OVERHEAD SIGN SUPPORT TYPE TC-12.30, DESIGN 7
STA. 40+40, S.R. 161 EASTBOUND

SEE SHEET 105 FOR PLAN VIEW.

HORIZONTAL SCALE IN FEET 0 2.5 5 10

CALCULATED BEB
CHECKED RMG

OVERHEAD SIGN SUPPORT DETAILS
OSS-1 - STA. 40+40, S.R. 161 EASTBOUND

S.R. 161/ EITERMAN RD. ROUNDABOUT

G:\2013\2013945\UNI\80748\TRAFFIC\SHEETS\80748TE001.DGN
1/19/2015
11:59:20 AM
WFISHER

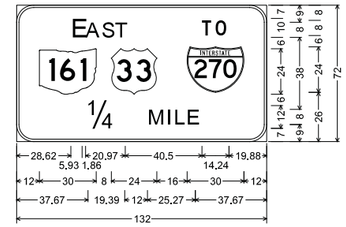

PANEL A
N.T.S.

PANEL A	
DESIGN LEVEL:	3
TEXT FONT:	CLEARVIEWHWY
PANEL SIZE:	11′ X 6′
BACKGROUND:	GREEN
FILL COLOR:	WHITE
NUMBER OF BRACKETS:	2
SIGN SUPPORT INFORMATION	
TOTAL SIGN AREA:	66 SQ. FT.
TOTAL ℄ TO ℄ LENGTH:	10.5 FT.
DESIGN TYPE:	TC-12.30, DESIGN 3

SUPPORT FOUNDATION INFORMATION

SUPPORT TYPE	DESIGN NUMBER	FOUNDATION DEPTH	FOUNDATION DIAMETER
TC-12.30	3	11.0′	36″

NOTES:
1. CONTRACTOR SHALL FIELD VERIFY EXISTING ELEVATIONS PRIOR TO THE ORDERING OF ANY MATERIALS.
2. ALL SIGNS ARE VIEWED IN THE DIRECTION OF TRAVEL.
3. CONTRACTOR SHALL LOCATE ALL UNDERGROUND UTILITIES IN FIELD PRIOR TO ANY EXCAVATION.

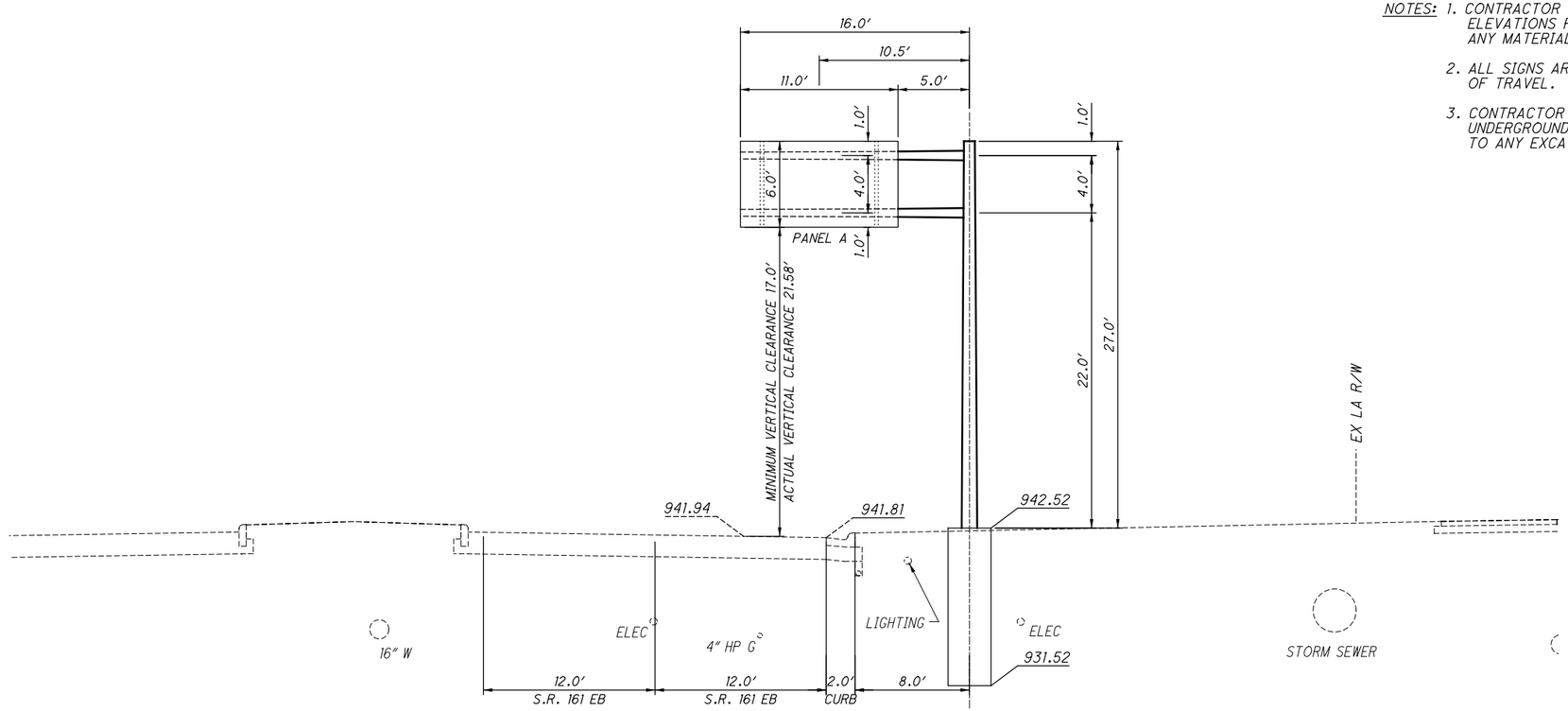

OSS-2 OVERHEAD SIGN SUPPORT TYPE TC-12.30, DESIGN 3
STA. 37+92, S.R. 161 EASTBOUND

SEE SHEET 105 FOR PLAN VIEW.

0 2.5 5 10
HORIZONTAL SCALE IN FEET

CALCULATED BEB
CHECKED RMG

OVERHEAD SIGN SUPPORT DETAILS
OSS-2 - STA. 37+92, S.R. 161 EASTBOUND

S.R. 161/EITERMAN RD. ROUNDABOUT

D:\2013\20139 45\UNI\80748\TRAFFIC\SHEETS\80748TE002.DGN
1/19/2015
11:42:47 AM
WFISHER

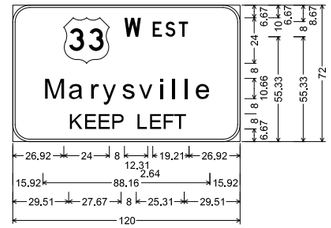

N.T.S.

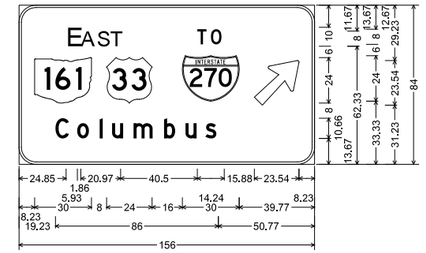

PANEL B
N.T.S.

PANEL A	
DESIGN LEVEL:	3
TEXT FONT:	CLEARVIEWHWY
PANEL SIZE:	10′ X 6′
BACKGROUND:	GREEN
FILL COLOR:	WHITE
NUMBER OF BRACKETS:	2
PANEL B	
DESIGN LEVEL:	3
TEXT FONT:	CLEARVIEWHWY
PANEL SIZE:	13′ X 7′
BACKGROUND:	GREEN
FILL COLOR:	WHITE
NUMBER OF BRACKETS:	3
SIGN SUPPORT INFORMATION	
TOTAL SIGN AREA:	236 SQ. FT.
TOTAL SPAN LENGTH:	143 FT.
DESIGN TYPE:	TC-15.115

SUPPORT FOUNDATION INFORMATION

SUPPORT TYPE	DESIGN NUMBER	FOUNDATION DEPTH	FOUNDATION DIAMETER
TC-15.115	15.115	12.0′	30″

NOTES:
1. ALL SIGNS ARE VIEWED IN THE DIRECTION OF TRAVEL.
2. CONTRACTOR SHALL LOCATE ALL UNDERGROUND UTILITIES IN FIELD PRIOR TO ANY EXCAVATION.

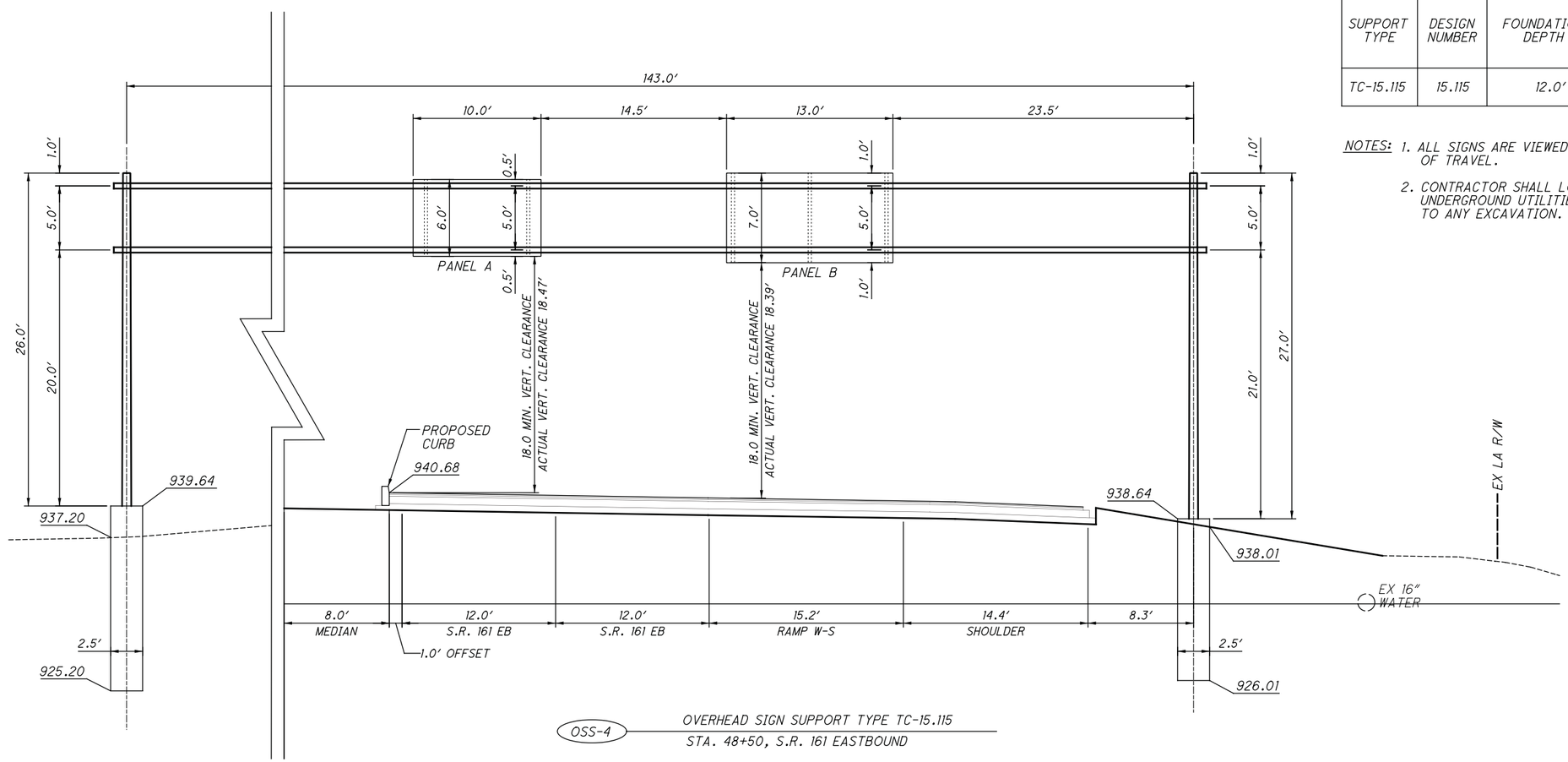

OSS-4 OVERHEAD SIGN SUPPORT TYPE TC-15.115
STA. 48+50, S.R. 161 EASTBOUND

SEE SHEET 108 FOR PLAN VIEW.

HORIZONTAL SCALE IN FEET
0 2.5 5 10

CALCULATED ARL
CHECKED RMG

OVERHEAD SIGN SUPPORT DETAILS
OSS-4 - STA. 48+50, S.R. 161 EASTBOUND

S.R. 161/EITERMAN RD. ROUNDABOUT

G:\2013\2013945\UNI\80748\TRAFFIC\SHEETS\80748TE003.DGN
1/19/2015
11:57:49 AM
WRIGHER

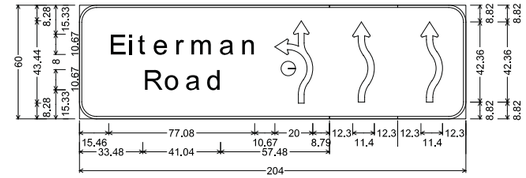

PANEL A
N.T.S.

PANEL A	
DESIGN LEVEL:	3
TEXT FONT:	CLEARVIEWHWY
PANEL SIZE:	17′ X 5′
BACKGROUND:	GREEN
FILL COLOR:	WHITE
NUMBER OF BRACKETS:	3
SIGN SUPPORT INFORMATION	
TOTAL SIGN AREA:	236 SQ. FT.
TOTAL SPAN LENGTH:	143 FT.
DESIGN TYPE:	TC-15.115

SUPPORT FOUNDATION INFORMATION

SUPPORT TYPE	DESIGN NUMBER	FOUNDATION DEPTH	FOUNDATION DIAMETER
TC-15.115	15.115	12.0′	30″

NOTES: 1. ALL SIGNS ARE VIEWED IN THE DIRECTION OF TRAVEL.

2. CONTRACTOR SHALL LOCATE ALL UNDERGROUND UTILITIES IN FIELD PRIOR TO ANY EXCAVATION.

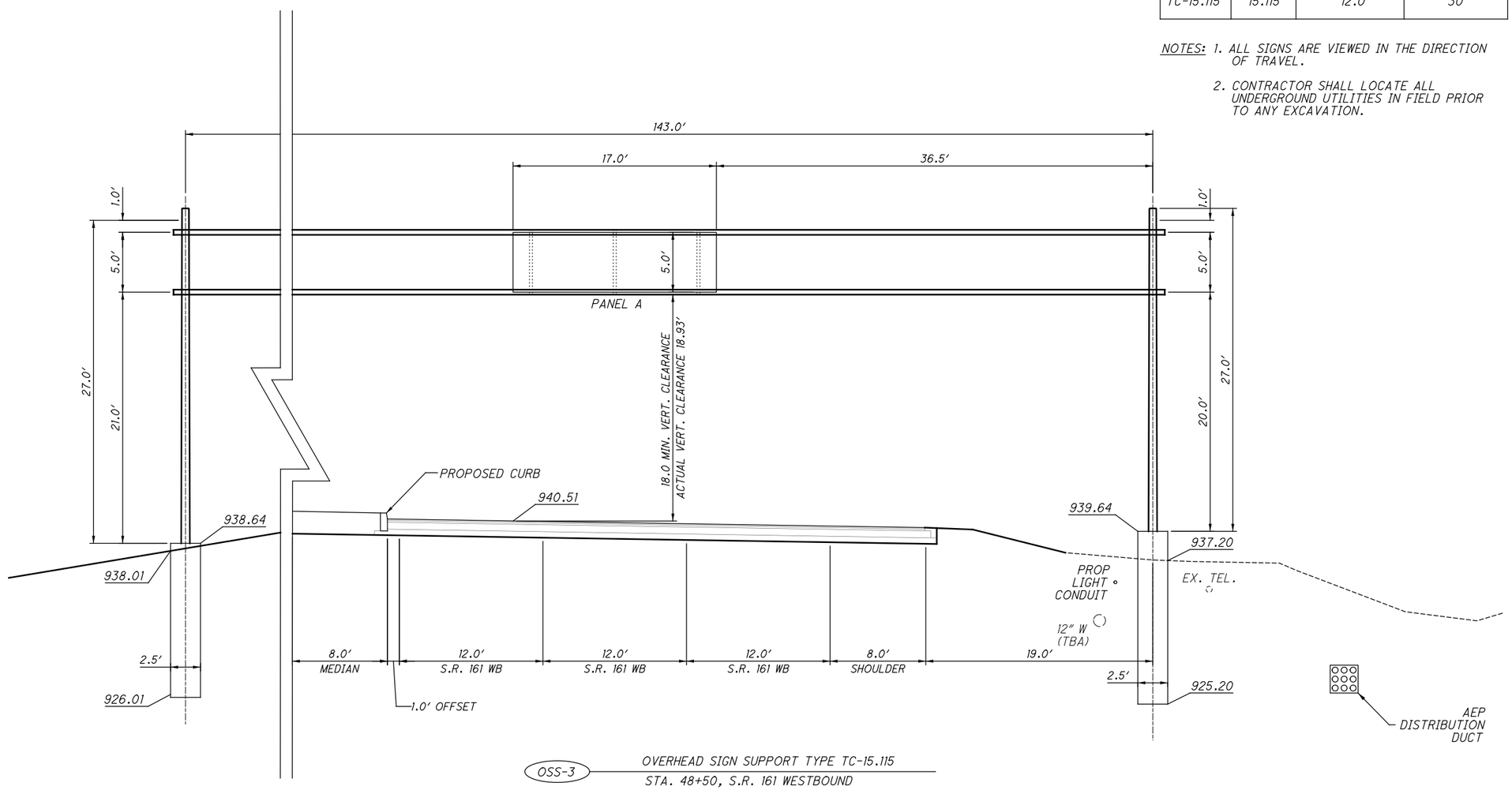

OSS-3 OVERHEAD SIGN SUPPORT TYPE TC-15.115
STA. 48+50, S.R. 161 WESTBOUND

SEE SHEET 108 FOR PLAN VIEW.

0 2.5 5 10
HORIZONTAL SCALE IN FEET

CALCULATED ARL
CHECKED RMG

OVERHEAD SIGN SUPPORT DETAILS
OSS-3 - STA. 48+50, S.R. 161 WESTBOUND

S.R. 161/ EITERMAN RD. ROUNDABOUT

D:\2013\2013945\UNI\80748\TRAFFIC\SHEETS\80748TE004.DGN
1/19/2015
11:57:17 AM
WFISHER

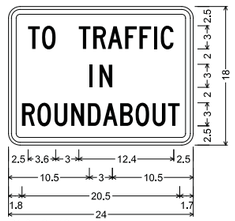

R1-2a_24x18;
1.5" Radius, 0.6" Border, 0.4" Indent, Black on White;
[TO TRAFFIC] C 2K 80% spacing;
[IN] C 2K specified length;
[ROUNDABOUT] C 2K specified length;

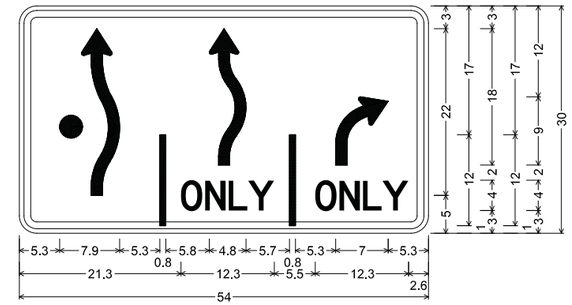

Special_54x30;
2.3" Radius, 0.9" Border, 0.6" Indent, Black on White;
ACAD-Roundabout left; r3; [ONLY] D 2K 40% spacing;
ACAD-Roundabout left; [ONLY] D 2K 40% spacing;

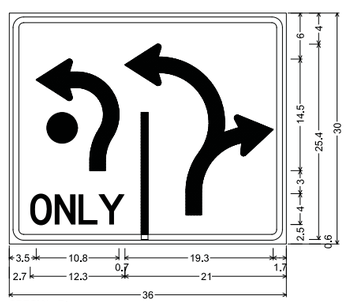

SPECIAL R;
1.9" Radius, 0.8" Border, 0.5" Indent, Black on White;
ACAD-Special R; [ONLY] D 2K 40% spacing;
ACAD-Special R;

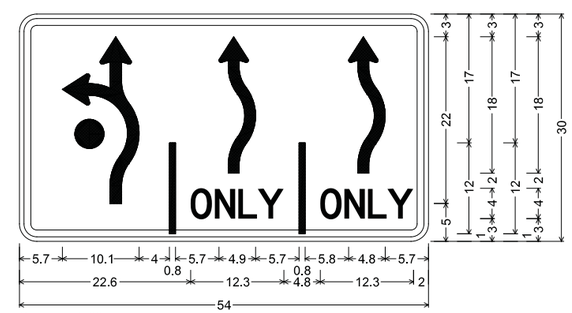

Special_54x30;
2.3" Radius, 0.9" Border, 0.6" Indent, Black on White;
r2; r3; [ONLY] D 2K 40% spacing; r3;
[ONLY] D 2K 40% spacing;

NOTES:
1. ALL DIMENSIONS ARE IN INCHES
2. DRAWING IS NOT TO SCALE

CALCULATED BEB
CHECKED RMG

SIGN DETAIL

S.R. 161/ EITERMAN RD.
ROUNDABOUT

O:\2013\2013945\UNI\80748\TRAFFIC\SHEETS\80748TD001.DGN
1/19/2015
11:22:11 AM
WFISHER

ODOT SPECIFICATION AND DRAWING STANDARDS FOR USE IN THE CITY OF DUBLIN

THE FOLLOWING ITEMS SHALL CONFORM TO THE CORRESPONDING OHIO DEPARTMENT OF TRANSPORTATION CONSTRUCTION AND MATERIAL SPECIFICATION ITEM NUMBER AND CITY OF DUBLIN STANDARD DRAWING NUMBER:

	STANDARD DRAWING	PERFORMANCE	MATERIAL
LUMINAIRE	SL-01	625.08	725.11
TRANSFORMER BASE	SL-02	-----	-----
LIGHT POLE	SL-03	625.09	725.21
POLE FOUNDATIONS	SL-04	625.10	-----
TRENCHES	SL-05	625.13	-----
CABLE CONNECTIONS AND SPICES	----	625.17	725.15
CONDUIT	----	625.12	725.05
GROUND ROD	----	625.16	725.16
PULL BOXES	----	625.11	725.06
TESTING	----	625.19	-----

UNDERGROUND UTILITY NOTIFICATION

THE LOCATION OF THE UNDERGROUND UTILITIES SHOWN ON THE PLANS HAVE BEEN OBTAINED BY EXTENSIVE FIELD CHECKS AND SEARCHES OF AVAILABLE RECORDS. IT IS BELIEVED THAT THEY ARE ESSENTIALLY CORRECT. EXTREME CAUTION SHALL BE EXERCISED IN AREAS WITH UNDERGROUND ELECTRICAL CONDUIT OR CABLE, SEWERS, WATERLINES, OR ANY OTHER UNDERGROUND UTILITY.

THE CONTRACTOR SHALL BE RESPONSIBLE FOR LOCATING AND MARKING ALL UNDERGROUND UTILITIES, INCLUDING BUT NOT LIMITED TO THE FOLLOWING: ELECTRICAL CONDUIT, DUCT AND/OR CABLE, SEWERS, AND DRAINS TO PREVENT DAMAGE DURING CONSTRUCTION.

THE CONTRACTOR SHALL NOTIFY THE UTILITIES, BY O.U.P.S. OR DIRECTLY BY TELEPHONE, FORTY EIGHT (48) HOURS IN ADVANCE OF WORK. THE CONTRACTOR WILL BE RESPONSIBLE FOR ALL DAMAGE CAUSED TO ANY AND ALL UNDERGROUND UTILITY BY THE EXCAVATION ETC., AND WILL BE REQUIRED AT THE CONTRACTOR'S EXPENSE TO REPAIR THE DAMAGE TO AN "AS WAS" CONDITION.

OHIO UTILITIES PROTECTION SERVICE (OUPS): 1-800-362-2764 OR DIAL 811.

ITEM 625, LIGHTING, MISC.: ELECTRICAL LIGHTING TEST

THE CONTRACTOR SHALL PERFORM A SERIES OF ELECTRICAL TESTING FOR THE STREET LIGHTING INSTALLATIONS, AS OUTLINED IN ODOT ITEM 625.19. THE CONTRACTOR SHALL NOT PERFORM TESTING FOR THE LOWERING DEVICE OPERATION NOTED IN ITEM 625.19, SUBPARAGRAPH E, AS IT IS NOT APPLICABLE TO THIS PROJECT. THE INTENT OF THIS TESTING ITEM IS TO PERFORM A COMPREHENSIVE TESTING OF THE LIGHTING INSTALLATIONS THAT IS APPROPRIATE FOR THE LIGHTING SYSTEM WITH A #4 AWG 600 VOLT DISTRIBUTION CABLE LIGHTING CIRCUIT. A HIGH VOLTAGE TEST IS NOT APPLICABLE TO THIS PROJECT.

PAYMENT SHALL BE INCLUDED IN THE LUMP SUM PRICE BID FOR ITEM 625, LIGHTING, MISC.: ELECTRICAL LIGHTING TEST COMPLETE AND IN PLACE, ALL CONNECTIONS AND SYSTEMS TESTED AND ACCEPTED.

CONDUIT AND CONDUIT SLEEVES INSTALLATION UNDER PAVEMENTS

ALL CONDUITS AND SLEEVES PLACED UNDER SIDEWALK, BIKEPATH, DRIVEWAY, AND STREET PAVEMENT SHALL BE INSTALLED PRIOR TO THE PLACEMENT OF ANY SUBBASE OR NEW PAVEMENT. PAYMENT FOR TRENCH SHALL BE MADE PER ITEM 625, "TRENCH, 30" DEEP, AS PER PLAN". 4" SCH 80 CONDUIT SLEEVES SHALL EXTEND 3' BEYOND THE BACK OF CURB LINE OR EDGE OF PAVEMENT.

ITEM 625, LUMINAIRE, MISC: (BY NUMBER) BAR LED, (BY TYPE) DISTRIBUTION, 480 VOLT

THIS ITEM SHALL CONSIST OF A CREE EDGE AREA LIGHT, LED LUMINAIRE WITH TYPE II & IV DISTRIBUTION (AS SPECIFIED ON THE LIGHTING PLAN DETAIL SHEETS), DIRECT MOUNTING, 480 VOLT SINGLE PHASE, MULTIPLE LED, 525 mA DRIVE CURRENT, COLOR TO BE BRONZE.

APPROVED MANUFACTURERS:
TYPE IV: CREE LED -
ARE-EDG-4M-DA-12-D-UH-BZ-525-40K
ARE-EDG-4M-DA-10-D-UH-BZ-525-40K
TYPE II: CREE LED -
ARE-EDG-2M-DA-8-D-UH-BZ-525-40K

ITEM 625, LIGHT POLE FOUNDATION, MISC.: 24" X 7' DEEP

THE TOP OF THE FOUNDATIONS SHALL BE ONE INCH ABOVE GROUND LEVEL. THE CONTRACTOR SHALL BE RESPONSIBLE FOR VERIFYING THE FOUNDATION ELEVATIONS PRIOR TO INSTALLATION OF THE FOUNDATIONS. THE FOUNDATION DEPTH IN NO CASE SHALL BE LESS THAN THE SPECIFIED FOUNDATION DEPTH PER PAY ITEM, BUT SHALL OTHERWISE BE IN CONFORMANCE TO ODOT SPECIFICATIONS REGARDING FOUNDATIONS IN BEDROCK. THE FOUNDATION SHALL FOLLOW CITY STANDARD SL-04.

PAYMENT FOR THIS ITEM SHALL BE AT THE UNIT PRICE BID, COMPLETE AND IN PLACE, AND ACCEPTED.

ITEM 625, PULL BOX, 725.06, 18", AS PER PLAN

IN ADDITION TO THE SPECIFICATIONS OF ODOT ITEM 625, THE UNIT SUPPLIED AND INSTALLED SHALL BE A HUBBELL POWER SYSTEMS, PART NUMBER QUAZITE PG1118BA18 OR APPROVED EQUAL. OVERALL DIMENSIONS OF THE PULL BOX SHALL BE 11" WIDE BY 18" LONG BY 18" DEEP. "LIGHTING" SHALL BE ON RAISED LETTERS OR EMBOSSED LETTERS ON THE PULL BOX COVER.

PAYMENT FOR THIS ITEM SHALL BE AT THE UNIT PRICE BID, COMPLETE, IN PLACE AND ACCEPTED.

ITEM 625, TRENCH, 30" DEEP, AS PER PLAN

THIS ITEM SHALL CONSIST OF TRENCHING AS SHOWN IN THE CITY OF DUBLIN STANDARD DRAWING SL-05.

PAYMENT FOR THIS ITEM SHALL BE AT THE UNIT PRICE BID PER LINEAR FOOT.

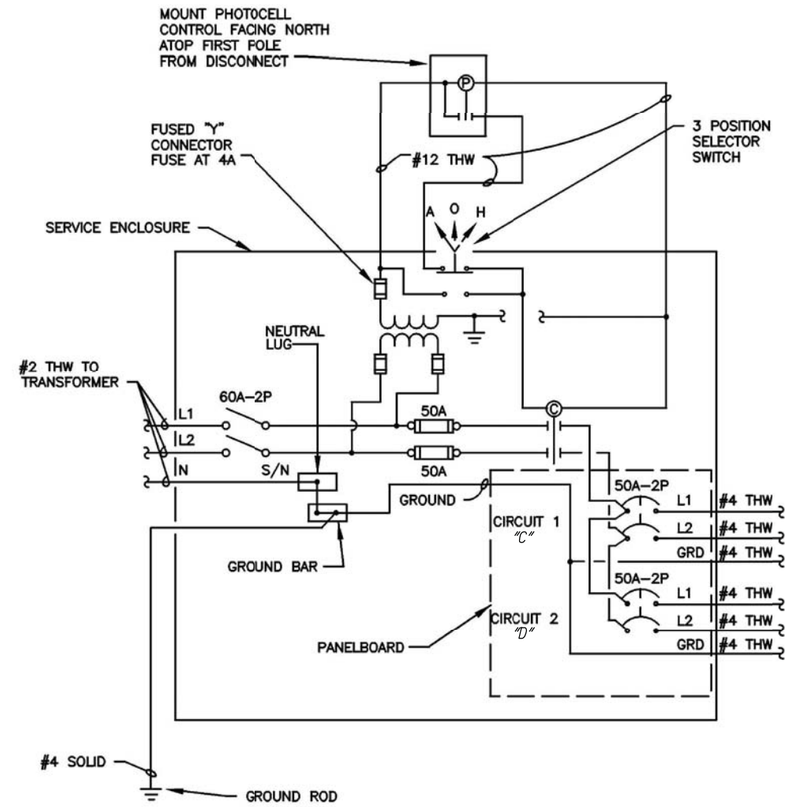

EXISTING POWER SERVICE SCHEMATIC DIAGRAM
NOT TO SCALE

ITEM 625, TRANSFORMER BASE, TYPE AT-A, AS PER PLAN

THIS ITEM SHALL CONSIST OF A TRANSFORMER BASE AS SHOWN IN THE CITY OF DUBLIN STANDARD DRAWING SL-02.

PAYMENT FOR THIS ITEM SHALL BE AT THE UNIT PRICE BID COMPLETE AND IN PLACE, AND ACCEPTED.

ITEM 625, LIGHT POLE, CONVENTIONAL, 35', AS PER PLAN

THIS ITEM SHALL CONSIST OF A LIGHT POLE AS SHOWN IN THE CITY OF DUBLIN STANDARD DRAWING SL-03.

PAYMENT FOR THIS ITEM SHALL BE AT THE UNIT PRICE BID COMPLETE AND IN PLACE, AND ACCEPTED.

ITEM 625, CONDUIT, 4", 725.05 (SCH. 80), AS PER PLAN

IT IS THE INTENT OF THIS ITEM THAT THE 4" CONDUIT SLEEVE PLACED UNDER A ROADWAY (OR PLANNED FUTURE ROADWAY) SHALL BE SCHEDULE 80 PVC CONDUIT.

PAYMENT FOR THIS ITEM SHALL BE AT THE UNIT PRICE BID COMPLETE AND IN PLACE, AND ACCEPTED.

CALCULATED LAM
CHECKED SDS

LIGHTING NOTES

S.R. 161/ EITERMAN RD. ROUNDABOUT

O:\2013\2013945\UNI\80748\lighting\sheets\80748LN001.dgn

REF NO.	SHEET NO.	STATION FROM	STATION TO	SIDE	625 CONNECTION, FUSED PULL APART	625 CONNECTION, UNFUSED PULL APART	625 TRANSFORMER BASE, TYPE AT-A, AS PER PLAN	625 LIGHT POLE, CONVENTIONAL, 35', AS PER PLAN	625 LIGHT POLE FOUNDATION, MISC.: 24" X 7' DEEP	625 NO. 4 AWG 600 VOLT DISTRIBUTION CABLE	625 NO. 12 AWG POLE AND BRACKET CABLE	625 CONDUIT, 2", 725.05	625 CONDUIT, 4", 725.05 (SCH. 80), AS PER PLAN	625 LUMINAIRE, MISC.: 8 BAR LED, TYPE II DISTRIBUTION, 480 VOLT	626 LUMINAIRE, MISC.: 10 BAR LED, TYPE IV DISTRIBUTION, 480 VOLT	627 LUMINAIRE, MISC.: 12 BAR LED, TYPE IV DISTRIBUTION, 480 VOLT	625 TRENCH, 30" DEEP, AS PER PLAN	625 PULL BOX, 725.06, 18", AS PER PLAN	625 GROUND ROD	625 PLASTIC CAUTION TAPE	625 LIGHTING, MISC.: CADWELD CONNECTION
					EACH	EACH	EACH	EACH	EACH	FT	FT	FT	FT	EACH	EACH	EACH	FT	EACH	EACH	FT	EACH
12	121	39+65.4		LT	1	2															
13	121	39+65.4	41+03	LT						444		138					138			138	
14	121	41+03		LT	1	2	1	1	1		141			1					1		1
15	121	41+03	42+44	LT						453		141					141			141	
16	121	39+97.7		RT	1	2															
17	121	39+97.7	41+82	RT						585		185					185			185	
18	121	41+82		RT	1	2	1	1	1		141			1					1		1
19	122	42+44		LT	1	2	1	1	1		141			1					1		1
20	122	42+44	43+29	LT						345		105					105			105	
21	122	43+29		LT	1	2	1	1	1		141				1				1		1
22	122	43+29	43+99	LT						288		86					86			86	
23	122	43+99		LT	1	2	1	1	1		141					1			1		1
24	122	43+99	6049+68 (WNE)	LT						183		51					51			51	
25	122	6049+68 (WNE)		LT														1			
26	122	6049+68 (WNE)	6050+14.4 (WNE)	LT						216		62	62				62			62	
27	122	6050+14.4 (WNE)		LT														1			
28	122	6050+14.4 (WNE)	45+30	LT						282		84					84			84	
29	122	45+30		LT	1	2	1	1	1		141					1			1		1
30	122	45+30	46+03	LT						285		85					85			85	
31	122	46+03		LT	1	2	1	1	1		141				1				1		1
32	122	46+03	46+94	LT						315		95					95			95	
33	122	46+94		LT	1	2	1	1	1		141			1					1		1
34	122	46+94	47+01	LT						51		7					7			7	
35	122	47+01		LT														1			
36	122	47+01	47+57	LT						231		67	67				67			67	
37	122	41+82	43+37	RT						462		144					144			144	
38	122	43+37		RT	1	2	1	1	1		141					1			1		1
39	122	43+37	44+03	RT						285		85					85			85	
40	122	44+03		RT	1	2	1	1	1		141				1				1		1
41	122	44+03	6104+11 (WSW)	RT						240		70					70			70	
42	122	6104+11 (WSW)		RT														1			
43	122	6104+11 (WSW)	102+53	RT/LT						108		26					26			26	
44	122	6104+11 (WSW)	6020+52 (WSE)	RT						276		82	82				82			82	
45	122	6020+52 (WSE)		RT														1			
46	122	6020+52 (WSE)	45+74	RT						252		74					74			74	
47	122	45+74		RT	1	2	1	1	1		141					1			1		1
48	122	45+74	46+86	RT						393		121					121			121	
49	122	46+86		RT	1	2	1	1	1		141			1					1		1
50	122	46+86	47+92	RT						336		102					102			102	
51	123	47+57		LT														1			
52	123	47+57	48+94	LT						441		137					137			137	
53	123	48+94		LT	1	2	1	1	1		141			1					1		1
54	123	48+94	50+20	LT								128					128			128	
55	123	50+20		LT														1			
56	123	47+92		RT	1	2	1	1	1		141				1				1		1
57	123	47+92	48+21	RT								29					29			29	
58	123	48+21		RT														1			
59		NOT USED																			
TOTALS CARRIED TO GENERAL SUMMARY					16	32	14	14	14	6471	1974	2104	211	6	4	4	2104	8	14	2104	14

CALCULATED LAM
CHECKED SDS

LIGHTING SUBSUMMARY

S.R. 161/ EITERMAN RD. ROUNDABOUT

REF NO.	SHEET NO.	STATION FROM	STATION TO	SIDE	625 CONNECTION, FUSED PULL APART	625 CONNECTION, UNFUSED PULL APART	625 TRANSFORMER BASE, TYPE AT-A, AS PER PLAN	625 LIGHT POLE, CONVENTIONAL, 35', AS PER PLAN	625 LIGHT POLE FOUNDATION, MISC., 24" X 7' DEEP	625 NO. 4 AWG 600 VOLT DISTRIBUTION CABLE	625 NO. 12 AWG POLE AND BRACKET CABLE	625 CONDUIT, 2", 725.05	625 CONDUIT, 4", 725.05 (SCH. 80), AS PER PLAN	625 LUMINAIRE, MISC., 8 BAR LED, TYPE II DISTRIBUTION, 480 VOLT	625 TRENCH, 30" DEEP, AS PER PLAN	625 GROUND ROD	625 PLASTIC CAUTION TAPE	625 LIGHTING, MISC., CADWELD CONNECTION
					EACH	EACH	EACH	EACH	EACH	FT	FT	FT	FT	EACH	FT	EACH	FT	EACH
60	124	102+53		LT	1	2	1	1	1		141			1		1		1
61	124	102+47	102+53	LT								6			6		6	
62	124	6020+52 (WSE)	101+98	RT						261		77			77		77	
63	124	101+98		RT	1	2	1	1	1		141			1		1		1
64	122	101+92	101+98	RT								6			6		6	
65	122	6103+60 (WSW)	6110+78 (WSL)	RT									30		30		30	
66	122	6011+10 (WSR)	6011+24 (WSR)	LT									15		15		15	
67	122	6011+02 (WSR)	6020+91 (WSE)	LT/RT									40		40		40	
TOTALS CARRIED TO GENERAL SUMMARY					2	4	2	2	2	261	282	89	85	2	174	2	174	2

CALCULATED LAM
CHECKED SDS

LIGHTING SUBSUMMARY

S.R. 161/EITERMAN RD. ROUNDABOUT

CONTROL SITE SCHEDULE							
CONTROL SITE	CIRCUIT	TOTAL LUMINAIRES	TOTAL WATTS	AMPS	KVA	CIRCUIT FUSE SIZE	COMMENT
EXISTING 480 VOLT CONTROL SITE 'B'	C	8	1732	3.6	1.73	30.00	
	D	8	1732	3.6	1.73	30.00	
TOTAL		16	-	-	-	60.00	

STREET LIGHTING PHOTOMETRIC RESULTS (FT-CANDLE)					
DESCRIPTION	AVG.	MAX.	MIN.	MAX./MIN.	AVG./MIN.
Circulatory Roadway	0.8	1.8	0.4	4.5:1	2.0:1
Approach Roadway	0.9	1.8	0.3	6.0:1	3.0:1

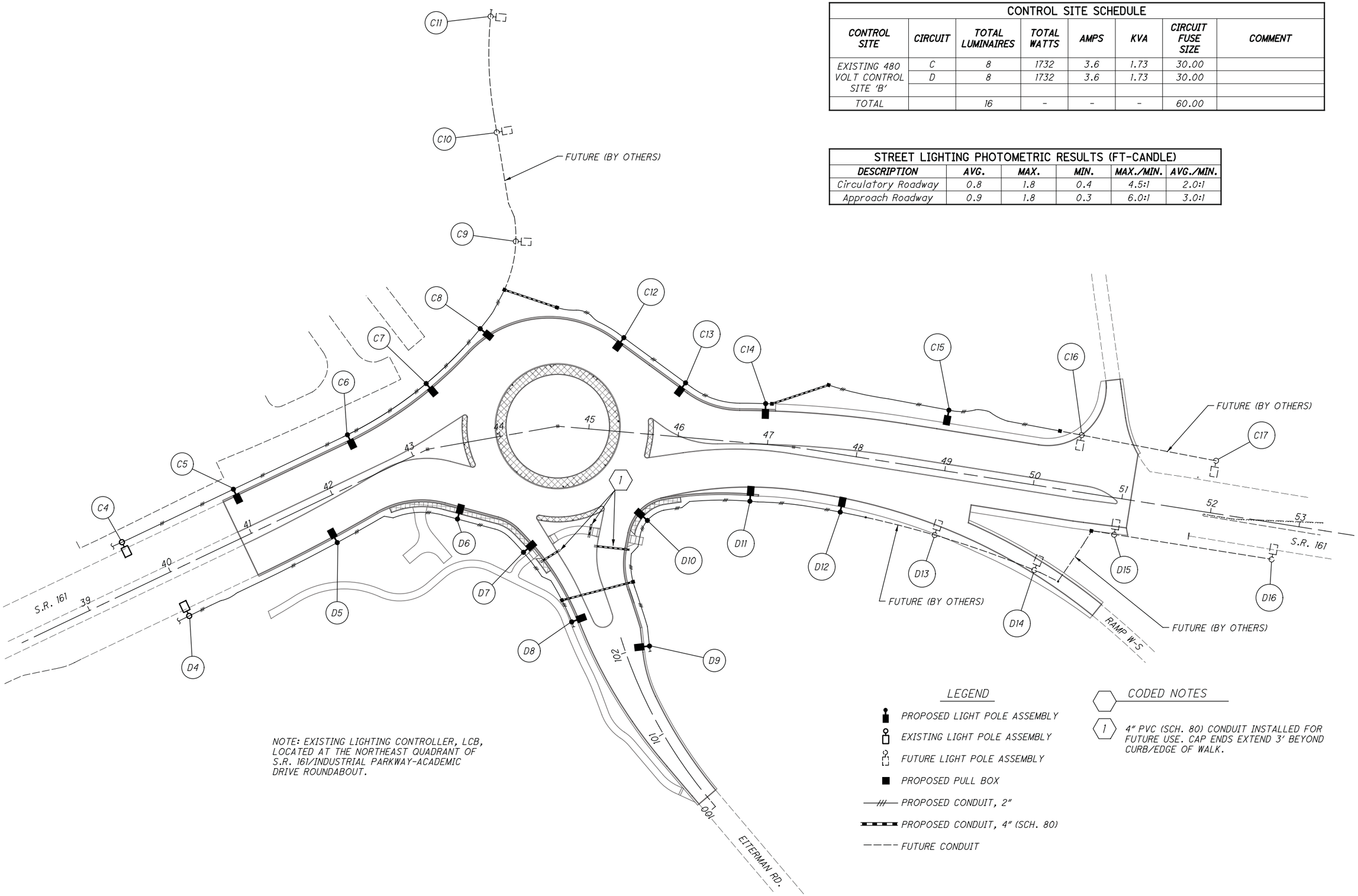

N

HORIZONTAL SCALE IN FEET
0 25 50 100

CALCULATED LAM
CHECKED SDS

LIGHTING SCHEMATIC PLAN

S.R. 161/ EITERMAN RD. ROUNDABOUT

\\Akrn04\Data\2013\2013945\UNI\80748\lighting\sheets\80748LB001.dgn

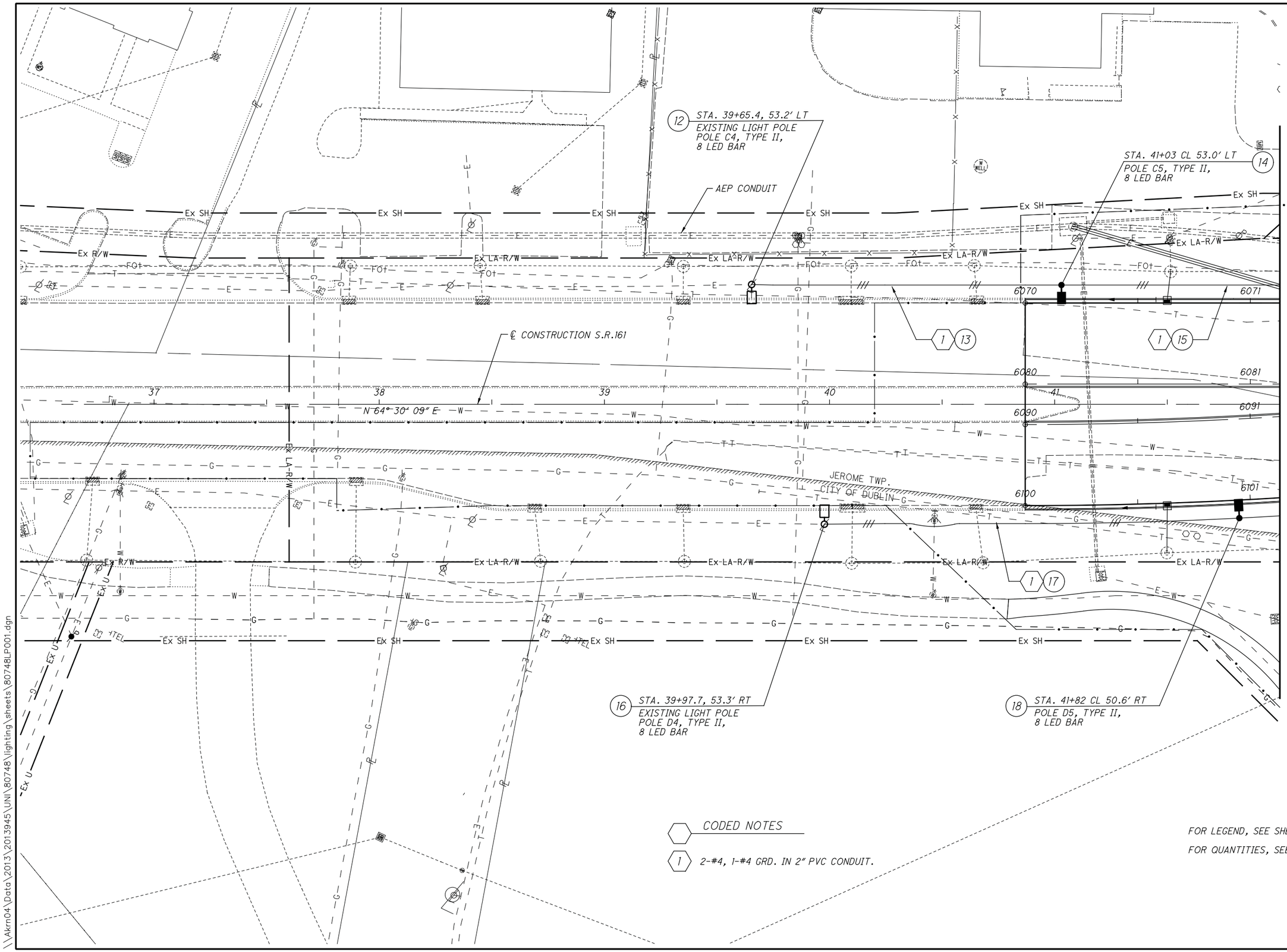
12 STA. 39+65.4, 53.2' LT
EXISTING LIGHT POLE
POLE C4, TYPE II,
8 LED BAR
AEP CONDUIT
STA. 41+03 CL 53.0' LT
POLE C5, TYPE II,
8 LED BAR
14
Ex SH
Ex R/W
Ex LA-R/W
FOt
℄ CONSTRUCTION S.R.161
N 64° 30' 09" E
37
38
39
40
41
6070
6071
6080
6081
6090
6091
6100
6101
1 13
1 15
1 17
JEROME TWP.
CITY OF DUBLIN
MATCH LINE S.R. 161 STA. 42+00.00 SHEET 122
16 STA. 39+97.7, 53.3' RT
EXISTING LIGHT POLE
POLE D4, TYPE II,
8 LED BAR
18 STA. 41+82 CL 50.6' RT
POLE D5, TYPE II,
8 LED BAR
Ex U
TEL
CODED NOTES
1 2-#4, 1-#4 GRD. IN 2" PVC CONDUIT.
FOR LEGEND, SEE SHEET 120
FOR QUANTITIES, SEE SHEET 118
HORIZONTAL SCALE IN FEET
0 10 20 40
CALCULATED LAM
CHECKED SDS
LIGHTING PLAN - S.R. 161
BEGIN PROJECT TO STA. 42+00.00
S.R. 161/ EITERMAN RD.
ROUNDABOUT
121
128
\\Akrn04\Data\2013\2013945\UNI\80748\lighting\sheets\80748LP001.dgn

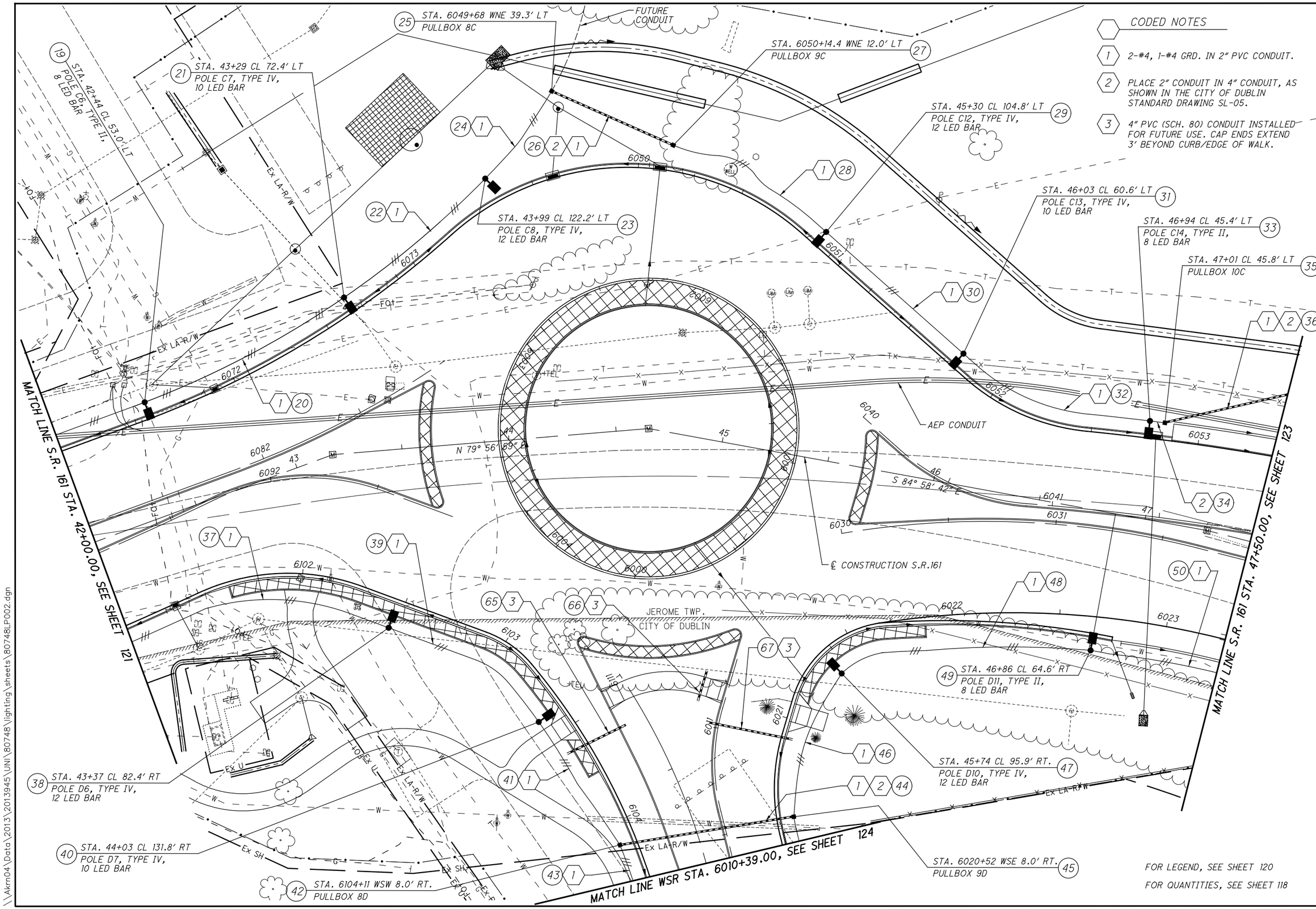

LIGHTING PLAN - S.R. 161
STA. 42+00.00 TO STA. 47+50.00

S.R. 161/ EITERMAN RD. ROUNDABOUT

\\Akrn04\Data\2013\2013945\UNI\80748\lighting\sheets\80748LP002.dgn

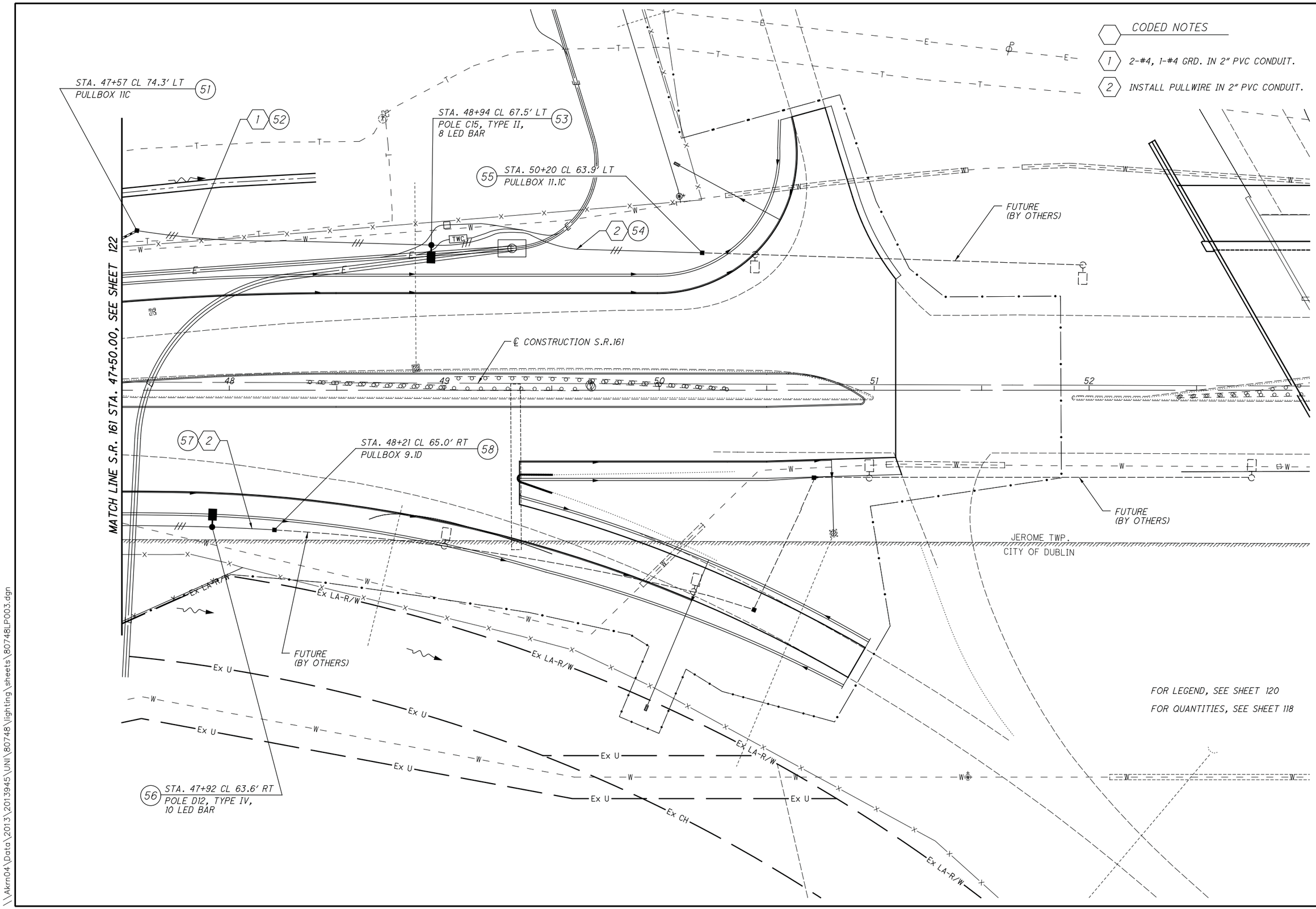
CODED NOTES
1 2-#4, 1-#4 GRD. IN 2" PVC CONDUIT.
2 INSTALL PULLWIRE IN 2" PVC CONDUIT.
STA. 47+57 CL 74.3' LT
PULLBOX 11C
51
1 52
STA. 48+94 CL 67.5' LT
POLE C15, TYPE II,
8 LED BAR
53
55 STA. 50+20 CL 63.9' LT
PULLBOX 11.1C
2 54
TWC
FUTURE
(BY OTHERS)
℄ CONSTRUCTION S.R.161
48
49
50
51
52
MATCH LINE S.R. 161 STA. 47+50.00, SEE SHEET 122
57 2
STA. 48+21 CL 65.0' RT
PULLBOX 9.1D
58
FUTURE
(BY OTHERS)
JEROME TWP.
CITY OF DUBLIN
Ex LA-R/W
Ex U
Ex CH
FUTURE
(BY OTHERS)
56 STA. 47+92 CL 63.6' RT
POLE D12, TYPE IV,
10 LED BAR
FOR LEGEND, SEE SHEET 120
FOR QUANTITIES, SEE SHEET 118
HORIZONTAL
SCALE IN FEET
0 10 20 40
CALCULATED
LAM
CHECKED
SDS
LIGHTING PLAN - S.R. 161
STA. 42+00.00 TO STA. 47+50.00
S.R. 161/EITERMAN RD.
ROUNDABOUT
123
128
\\Akrn04\Data\2013\2013945\UNI\80748\lighting\sheets\80748LP003.dgn

CODED NOTES

1. 2-#4, 1-#4 GRD. IN 2" PVC CONDUIT.
2. STUB OUT 2" CONDUIT 5.0' BEYOND POLE FOUNDATION AT 2.0' BELOW FINISHED GRADE. INSTALL PULLWIRE AND CAP CONDUIT.

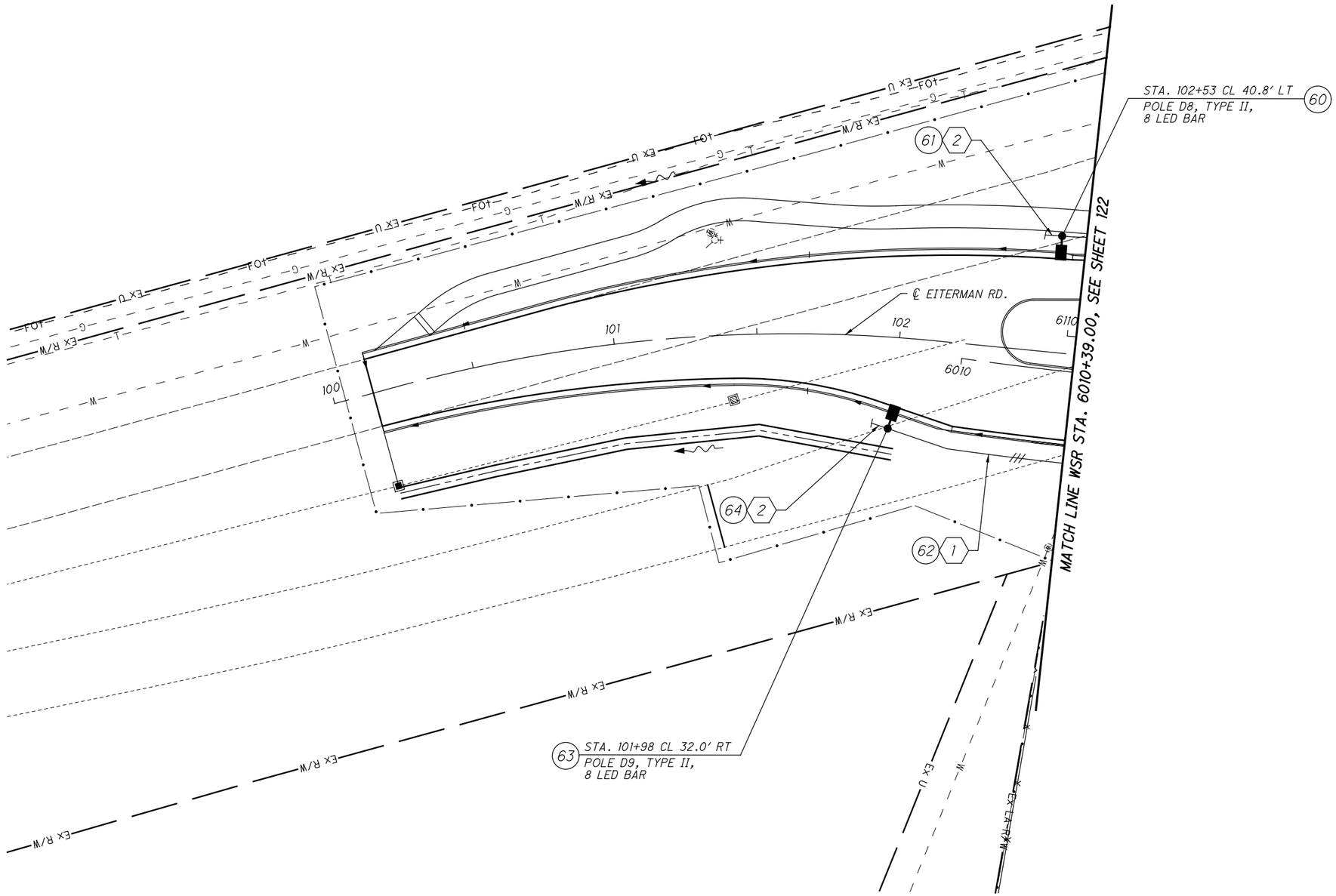

FOR LEGEND, SEE SHEET 120

FOR QUANTITIES, SEE SHEET 119

HORIZONTAL SCALE IN FEET 0 10 20 40

CALCULATED LAM
CHECKED SDS

LIGHTING PLAN - S.R. 161
STA. 42+00.00 TO STA. 47+50.00

S.R. 161/ EITERMAN RD. ROUNDABOUT

\\Akrn04\Data\2013\2013945\UNI\80748\lighting\sheets\80748LP004.dgn

LEGEND

SEE SHEET 117 FOR LUMINAIRE DESCRIPTION.

- GROUND LEVEL PULL BOX.
- FUSED 'Y' SPLICE KIT.
- UNFUSED 'Y' SPLICE KIT.
- FUSED 'Y' CONNECTOR KITS IN HAND HOLE OF LIGHT POLE.
- UNFUSED 'Y' CONNECTOR KITS IN HAND HOLE OF LIGHT POLE.
- PROPOSED LIGHT POLE ASSEMBLY
- EXISTING LIGHT POLE ASSEMBLY

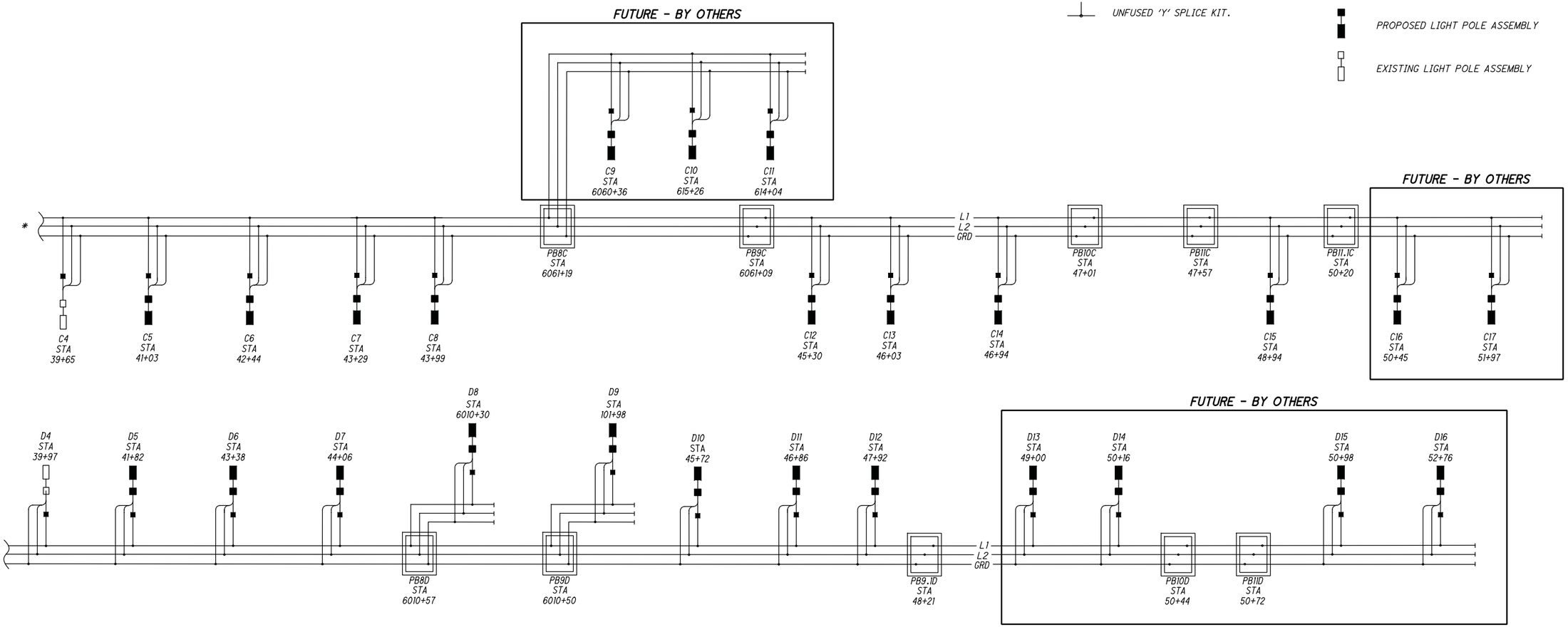

NOTES:

* EXISTING LIGHTING CIRCUIT 'C'.

** EXISTING LIGHTING CIRCUIT 'D'.

CALCULATED LAM CHECKED SDS

CONNECTION DIAGRAM - S.R. 161

S.R. 161/ EITERMAN RD. ROUNDABOUT

\\Akrn04\Data\2013\2013945\UNI\80748\lighting\sheets\80748LC001.dgn

CROSS REFERENCES	
SHEET NO.	DESCRIPTION
2 - 3	SCHEMATIC PLANS
4 - 11	TYPICAL SECTIONS
78	GRADING PLAN
127	HARDSCAPE NOTES & QUANTITIES
128	HARDSCAPE DETAILS

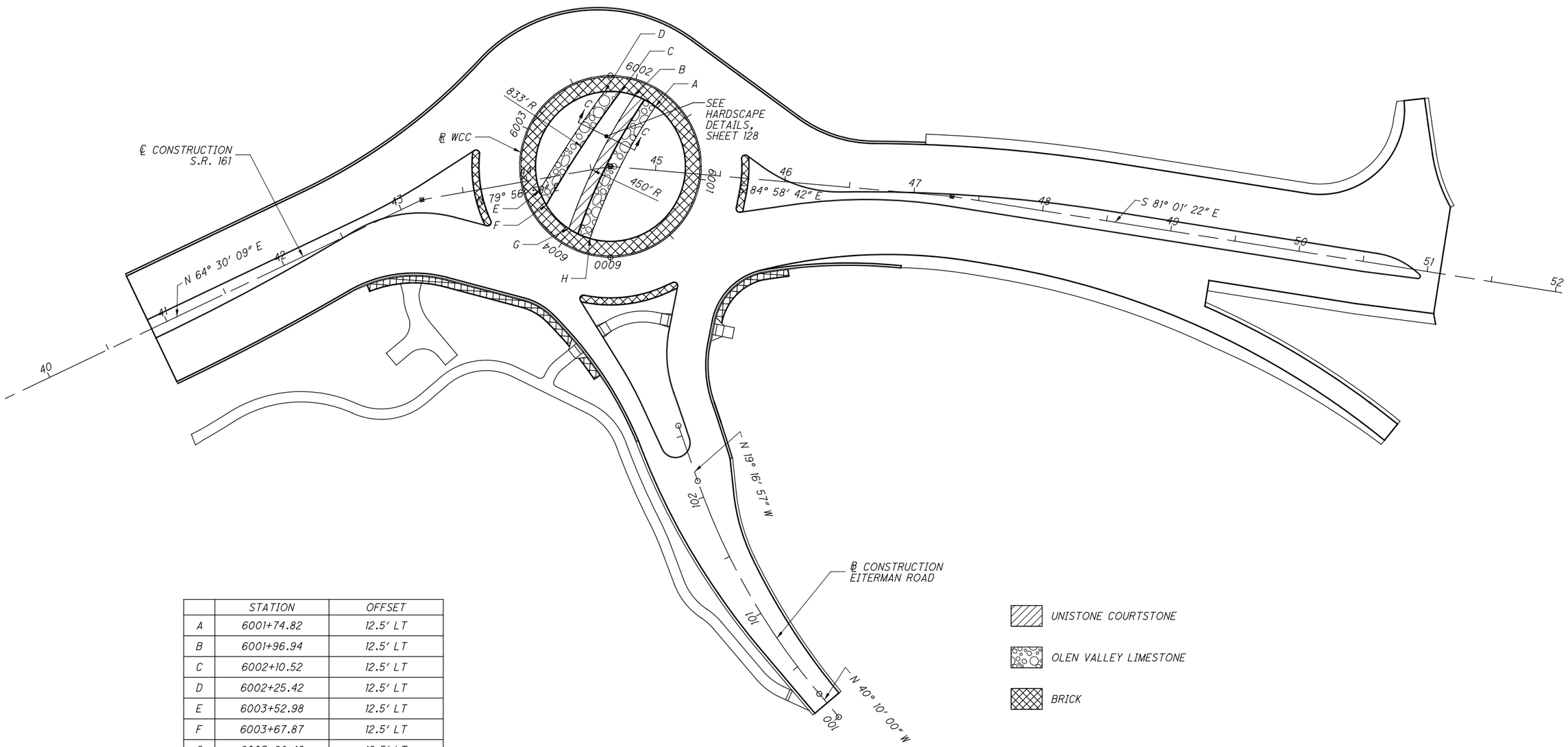

	STATION	OFFSET
A	6001+74.82	12.5' LT
B	6001+96.94	12.5' LT
C	6002+10.52	12.5' LT
D	6002+25.42	12.5' LT
E	6003+52.98	12.5' LT
F	6003+67.87	12.5' LT
G	6003+98.42	12.5' LT
H	6004+20.54	12.5' LT

HORIZONTAL SCALE IN FEET
0 20 40 80

CALCULATED LAM
CHECKED LMO

HARDSCAPE PLAN

S.R. 161/ EITERMAN RD. ROUNDABOUT

\\Akrn04\Data\2013\2013945\UNI\80748\roadway\sheets\80748PP001.dgn

GENERAL NOTES

SOLID CONCRETE INTERLOCKING PAVING UNITS

PART 1 GENERAL
1.01 DESCRIPTION
A. PROVIDE INTERLOCKING COBBLESTONE CONCRETE UNIT PAVING AS SHOWN AND SPECIFIED.

1.02 QUALITY ASSURANCE
A. INSTALLATION: PERFORMED ONLY BY SKILLED WORKMEN WITH SATISFACTORY RECORD OF PERFORMANCE ON COMPLETED PROJECTS OF COMPARABLE SIZE AND QUALITY.

B. DO NOT CHANGE SOURCE OF INTERLOCKING CONCRETE UNIT/GRID PAVERS DURING THE COURSE OF THE WORK.

1.03 DELIVERY, STORAGE, AND HANDLING
A. PROTECT PAVING UNITS FROM DAMAGE, CHIPPING, AND SOILING DURING DELIVERY AND STORAGE. STORE OFF THE GROUND ON PALLETS OR WOOD PLATFORMS.

B. STORE LOOSE GRANULAR MATERIALS WITHIN A WELL-DRAINED AREA ON A SOLID SURFACE TO PREVENT MIXING WITH FOREIGN MATERIALS.

1.04 PROJECT CONDITIONS / PLAN NOTES / PERMITS
A. ESTABLISH AND MAINTAIN REQUIRED LEVELS AND GRADE ELEVATIONS. REVIEW INSTALLATION PROCEDURES AND COORDINATE ANY WORK AFFECTED BY THE HARDSCAPE WORK.

B. COLD WEATHER:

1. DO NOT USE FROZEN MATERIALS OR MATERIALS MIXED OR COATED WITH ICE OR FROST.

2. DO NOT BUILD ON FROZEN WORK OR WET, SATURATED, OR MUDDY SUBGRADE. REMOVE AND REPLACE PAVING DAMAGED BY FROST OR FREEZING.

C. ALL DIMENSIONS ARE TAKEN TO FACE OF CURB UNLESS OTHERWISE NOTED.

D. CONTRACTOR SHALL LAYOUT AND ADJUST FOR APPROVAL BY CIVIL ENGINEER PRIOR TO CONSTRUCTION.

E. CONTRACTOR SHALL VERIFY DIMENSIONS AND NOTIFY CIVIL ENGINEER OF ANY DISCREPANCIES. USE DIMENSIONAL INFORMATION GIVEN. DO NOT SCALE DRAWINGS.

F. CONTRACTOR SHALL VERIFY EXACT LOCATIONS AND PROTECT ALL EXISTING AND PROPOSED SITE IMPROVEMENTS AND UTILITIES DURING CONSTRUCTION OPERATIONS. NOTIFY OHIO UTILITIES PROTECTION SERVICE (OUPS) AND CITY OF DUBLIN TO LOCATE EXISTING UTILITIES AT LEAST 48 HOURS PRIOR TO CONSTRUCTION START.

PART 2 PRODUCTS
2.01 MATERIALS

A. CONTRACTOR SHALL REFER QUESTIONS ON MATERIALS, FINISHED LABOR AND/OR PERFORMANCE STANDARDS NOT SPECIFIED HEREIN TO THE CIVIL ENGINEER.

B. GENERAL: PAVER UNIT MATERIALS AND FABRICATION SHALL MEET OR EXCEED THE REQUIREMENTS OF ASTM DESIGNATION C-936-82 STANDARD SPECIFICATIONS FOR SOLID CONCRETE INTERLOCKING PAVING UNITS.

1. PORTLAND CEMENT: ASTM C150.

2. AGGREGATE: ASTM C33.

3. COMPRESSIVE STRENGTH: MINIMUM 13,000 PSI AT TIME OF DELIVERY.

4. ABSORPTION: MAXIMUM 3%.

5. FREEZE-THAW TEST: ASTM C67, NO BREAKAGE AND MAXIMUM 1% LOSS IN DRY WEIGHT AFTER 50 CYCLES.

6. ABRASION RESISTANCE: ASTM C418, MAXIMUM VOLUME LOSS 15 CU. CM. AVERAGE THICKNESS LOSS 3 MM.

7. DIMENSION TOLERANCES: LENGTH MAXIMUM 1/16" (1.5 MM), HEIGHT MAXIMUM 1/8" (3 MM) FROM STANDARD DIMENSION.

8. PROVIDE ONLY SOUND UNITS FREE OF DEFECTS THAT WOULD INTERFERE WITH PROPER PLACING OF UNITS OR IMPAIR STRENGTH OR PERFORMANCE OF CONSTRUCTION. MINOR CRACKS AND MINOR CHIPPING INCIDENTAL TO METHODS OF MANUFACTURE, HANDLING IN SHIPMENT, AND DELIVERY WILL BE ACCEPTABLE SUBJECT TO LANDSCAPE ARCHITECT'S REVIEW AND ACCEPTANCE. EXCESSIVE CRACKS AND CHIPPING, AS DETERMINED BY THE LANDSCAPE ARCHITECT, WILL BE REJECTED AS NOT COMPLYING WITH SPECIFICATION REQUIREMENTS.

B. PAVER UNITS:

1. DESIGN STYLE AND COLOR: COURTSTONE XL RECTANGLE, COLORS SELECTED FROM MANUFACTURER'S STANDARD COLORS.

C. GEOTEXTILE FABRIC: AMACO 2002 OR EQUAL.

D. CRUSHED AGGREGATE BASE: SOUND ANGULAR, CRUSHED STONE, CRUSHED GRAVEL, CRUSHED SLAG, OR OTHER TYPES OF SUITABLE LOCALLY AVAILABLE MATERIALS COMPLYING WITH NATIONAL CRUSHED STONE ASSOCIATION (NCSA) MASTER RANGE GRADINGS. MATERIALS ARE TO BE FREE FROM CLAY, ORGANIC MATERIAL, OR OTHER DELETERIOUS MATTER.

E. BEDDING AND LEVELING MATERIAL: ASTM C33 OR AASHTO M43, #10 GRADED CLEAN COARSE CONCRETE SAND.

F. JOINT FILL: "HIGH PERFORMANCE" POLYMERIC SAND MANUFACTURED BY UNILOCK, CLEVELAND, OHIO OR ALLIANCE SUPER SAND BOND, MANUFACTURED BY ALLIANCE DESIGNER PRODUCTS, QUEBEC CANADA.

G. EDGING:

1. PAVE EDGE PAVER RESTRAINT SYSTEM: MANUFACTURED BY PAVE TECH INC., BLOOMINGTON, MN, OR APPROVED EQUAL. PROVIDE RIGID OR FLEXIBLE EDGING SYSTEMS AS APPLICABLE WITH 10" - 12" X 3/8" STEEL SPIKES.

PART 3 EXECUTION
3.01 PREPARATION
A. PROOF ROLL THE SUBGRADE AND DO ALL NECESSARY ROLLING AND COMPACTING TO OBTAIN FIRM, EVEN SUBGRADE SURFACE. FILL AND CONSOLIDATE DEPRESSED AREAS. REMOVE UNSUITABLE MATERIALS, REPLACE WITH CLEAN FILL AND COMPACT TO 100% OF MAXIMUM DRY DENSITY IN ACCORDANCE WITH ASTM D-698 STANDARD PROCTOR METHOD OR AASHTO T99 MOISTURE DENSITY TEST.

B. DO NOT USE PAVING UNITS WITH CHIPS, CRACKS, VOIDS, DISCOLORATION, OR OTHER VISIBLE DEFECTS.

C. CUT PAVING UNITS WITH DIAMOND BLADE, MOTOR-DRIVEN SAW EQUIPMENT DESIGNED TO CUT MASONRY WITH CLEAN, SHARP, UNCHIPPED EDGES. CUT UNITS AS REQUIRED TO PROVIDE PATTERN SHOWN AND TO FIT ADJOINING WORK NEATLY. USE FILL UNITS WITHOUT CUTTING WHEREVER POSSIBLE. WHERE CUTTING IS REQUIRED, USE THE LARGEST SIZE UNITS POSSIBLE. AVOID THE USE OF SMALL PIECES OF PAVERS OR LARGE JOINT SPACES.

D. SET INTERLOCKING CONCRETE UNIT PAVERS IN PATTERNS INDICATED WITH LEVEL SURFACE AND UNIFORM JOINTS OF WIDTHS INDICATED.

3.02 INSTALLATION: BASE MATERIALS
A. GEOTEXTILE FABRIC: INSTALL SINGLE LAYER WITH OVERLAPPING JOINTS ON COMPACTED SUBGRADE PRIOR TO INSTALLATION OF BASE MATERIALS.

B. BASE COURSE:

1. SPREAD BASE COURSE MATERIALS IN LAYERS WHICH, WHEN COMPACTED, WILL NOT EXCEED 4" LIFTS. PROVIDE 8" MINIMUM TOTAL COMPACTED DEPTH.

2. COMPACT EACH LIFT OF BASE COURSE MATERIALS WITH SUITABLE COMPACTION EQUIPMENT TO 95% OF MAXIMUM DRY DENSITY IN ACCORDANCE WITH ASTM D-698, STANDARD PROCTOR METHOD.

3. SCREED, LEVEL, AND SHAPE BASE COURSE SURFACE TO REQUIRED GRADE AND CROSS-SECTION WITH AN ALLOWABLE LOCAL TOLERANCE OF 1/4".

C. INSTALL EDGING TO PROVIDE SUITABLE RESTRAINT FOR PAVING EDGES NOT CONTAINED BY ADJACENT PAVING MATERIALS. ASSEMBLE TO LINES AND ELEVATIONS INDICATED. ALIGN, BEND AND ADJUST SECTIONS BEFORE STEEL SPIKES ARE SET.

D. BEDDING AND LEVELING COURSE

1. SPREAD BEDDING AND LEVELING COURSE MATERIALS EVENLY OVER THE ENTIRE AREA TO BE PAVED, SCREED TO A MINIMUM LEVEL THAT WILL PROVIDE A MAXIMUM 1" THICKNESS WHEN THE PAVING UNITS HAVE BEEN PLACED AND VIBRATED.

2. PROTECT SCREEDED AND LEVELED BEDDING AND LEVELING COURSE FROM DAMAGE UNTIL COVERED WITH PAVER UNITS. DO NOT PRE-COMPACT BEDDING AND LEVELING COURSE.

3.03 INSTALLATION: INTERLOCKING CONCRETE PAVERS
A. LAY PAVER UNITS IN PATTERN INDICATED ON THE DRAWINGS OR AS DIRECTED BY THE LANDSCAPE ARCHITECT. MAINTAIN DESIRED PATTERN AND PROVIDE UNIFORM 1/16" TO 1/8" JOINTS BETWEEN UNITS.

B. FILL GAPS AT THE EDGE OF THE PAVED SURFACE WITH STANDARD EDGE PIECES OR WITH PAVER UNITS CUT TO FIT. PROVIDE CUT UNITS WITH STRAIGHT EVEN CUT SURFACES, FREE FROM CRACKS OR CHIPS.

C. VIBRATE PAVER UNITS TO THEIR FINAL LEVEL WITH 3 OR MORE PASSES OF A VIBRATING PLATE COMPACTOR. THE PAVERS CAN BE INSULATED FROM THE COMPACTOR BY USING A RUBBER INSULATOR PAD, PLYWOOD SHEET, OR CARDBOARD SHEET.

D. AFTER FIRST VIBRATION, SWEEP HIGH PERFORMANCE POLYMERIC SAND OVER THE SURFACE AND VIBRATE MATERIAL INTO THE JOINTS WITH ADDITIONAL PASSES OF THE PLATE VIBRATOR. ADDITIONAL PASSES WITH THE VIBRATORY COMPACTOR ARE ALSO TO BE INSULATED FROM THE COMPACTOR BY USING A RUBBER INSULATOR PAD, PLYWOOD SHEET, OR CARDBOARD SHEET. COMPLETELY FILL IN JOINTS.

E. AFTER FINAL VIBRATING AND SETTING, THE SURFACE SHALL BE TRUE TO GRADE AND SHALL NOT VARY BY MORE THAN 1/4" WHEN TESTED WITH A 10'-0" STRAIGHT EDGE AT ANY LOCATION ON THE SURFACE.

3.04 PROTECTION
A. RESTRICT TRAFFIC FROM INTERLOCKING CONCRETE UNIT PAVING SURFACES DURING SETTLING OF UNITS AND UNTIL COMPLETION OF INSTALLATION.

B. PROTECT INTERLOCKING CONCRETE UNIT PAVING SURFACES FROM DAMAGE UNTIL FINAL ACCEPTANCE.

3.05 CLEANING
A. REMOVE AND REPLACE INTERLOCKING CONCRETE PAVING UNITS WHICH ARE BROKEN, CHIPPED, STAINED, OR OTHERWISE DAMAGED. PROVIDE NEW MATCHING UNITS, INSTALL AS SPECIFIED AND TO ELIMINATE EVIDENCE OF REPLACEMENT.

HARDSCAPE SUBSUMMARY			204	609	SPECIAL	SPECIAL		
			SUBGRADE COMPACTION	CURB, MISC., 14" HEIGHT	MISC: OLEN VALLEY LIMESTONE	MISC: UNISTONE COURTSTONE		
			SY	FT	SF	SF		
SHEET	STATION	TO STATION						
126	6002+04.01, 12.64' LT	6003+83.20, 13.71' LT	341	220	2067	891		
	TOTALS CARRIED TO GENERAL SUMMARY		**341**	**220**	**2067**	**891**		

CALCULATED LAM
CHECKED LMO

HARDSCAPE GENERAL NOTES & SUBSUMMARY

S.R. 161/ EITERMAN RD. ROUNDABOUT

\\Akrn04\Data\2013\2013945\UNI\80748\roadway\sheets\80748PN001.dgn

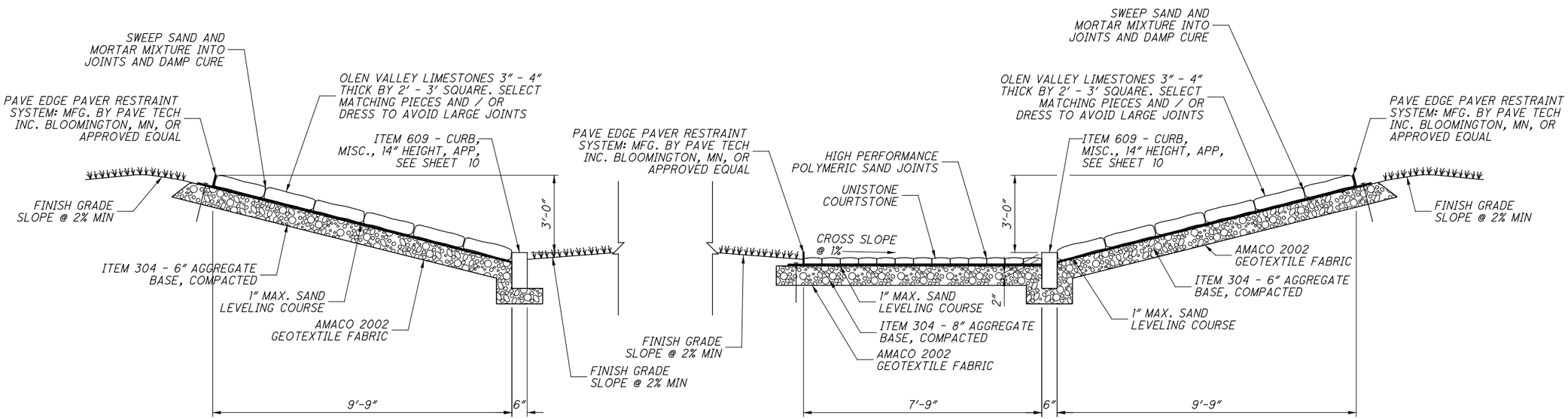

SECTION C-C
FLAGSTONE SLOPED SURFACE - ROUNDABOUT INTERIOR
NOT TO SCALE

CALCULATED LAM
CHECKED LMO

HARDSCAPE DETAILS

S.R. 161/ EITERMAN RD. ROUNDABOUT

128
128

\\Akrn04\Data\2013\2013945\UNI\80748\roadway\sheets\80748PD001.dgn