CONTINENTAL BUILDING SYSTEMS

Columbus Office:
150 East Broad Street
Columbus, Ohio 43215
(614) 221-1818

Pittsburgh Office:
395 E. Waterfront Drive
Homestead, PA 15120
(412) 464-8933

Cleveland Office:
23240 Chagrin Blvd, Ste 400
Beachwood, Ohio 44122
(216) 454-2500

CBS QA/QC PROGRAM OUTLINE

February, 10th 2015

CBS incorporates an in house Quality Assurance - Quality Control program to formalize and add consistency to our quality assurance process and provide for CBS project management and field personnel a reference and best practices guide to use on every project.
This QA – QC program is project specific, and all project materials and applications specific to Bridge Park are incorporated into the program.
Pre-Installation QA-QC Conferences conducted prior to installation will formally set accountability expectations for each trade contractor in regard to safety, schedule, manpower, and quality.

The Quality Assurance section will include a listing of the project specific items that when executed, will result in the successful completion of the contract requirements while in the process assuring a quality end product.
The Quality Control section will include a checklist of materials and processes that require verification by the project superintendent that our requirements are met.

In addition to our in-house QA/QC measures, the Project will incorporate an **accredited third party consultant** to monitor and verify that the exterior envelope systems installations are in accordance to the manufactures recommendations, and fully test for compliance.

These observations and testing will include;

Building Envelope Consulting (Pre-Construction)

- Review Project specifications and construction drawings.
- Submit a written report identifying any areas of concern related to weather ability, thermal continuity, products, and performance as designed.
- Review of construction sequencing and schedule.

Building Envelope Consulting (Construction Phase)

- Attend building enclosure skin components on-site pre-construction meetings
- Submit reports noting adherence to specifications and standards..
- Review the construction and detailing of exterior wall mock-ups per building type.
- Develop a site specific daily field inspection checklist.
- Perform on site/ in-field daily inspections throughout the installation of building enclosure systems.
- Inspect roofing sub straight conditions, surface preparation, and membrane application.
- Conduct final inspections and punch list.

Building Envelope Consulting (Performance Testing)

- Water penetration testing
- Water spray testing
- Sealant adhesion testing
- Infra-red thermograph of building envelope components, and roofing
- Create a report delineating any vapor transfer locations, moisture infiltration, thermo graphic images with photographs of construction details.
- Finalize project commissioning with warranties and close out documentation

All testing and field reports will be available anytime for review by the project team including the Owner, the Architect, project consultants, and The City of Dublin.

With this two part system in place, we are confident that all products and materials installed on the Bridge Park project will meet or exceed manufactures recommendations, ensuring that Bridge Park will perform and look as good in years to come as it does at completion.

Morgan Rogers
Project Executive
Continental Building Systems

BRIDGE PARK
DUBLIN, OH

CITADEL PANEL 15 used at buildings B1, B2, B4

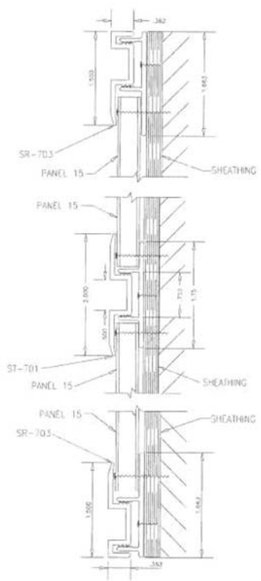

► DURABLE. A benchmark of quality for over 30 years, Panel 15® was designed to provide an economical, long-lasting solution in a laminated wood-core panel.

Named for its 15-Year Standard Warranty, these panels are ideal for cladding, fascia, soffits and accent bands.

And with 20 molding profiles available, you can create virtually any look and be confident it will remain for years to come.

P15 PROJECT	FREMONT ROAD SCHOOL
OWNER	FREMONT SCHOOL DISTRICT
LOCATION	MUNDELEIN, IL
ARCHITECT	LEGAT ARCHITECTS, IL
INSTALLER	M & E CONSTRUCTION
SYSTEM	2-PART REVEAL MOLDINGS
SOLD BY	S & S PANEL SALES, IL

PANEL FEATURES	15 YEAR WARRANTY, DURABILITY, PROVEN INDUSTRY		
FACE	.010" TEXT ALUM	WEIGHT	1.10 LBS/SQ FT
CORE	5/16" EXT. PLYWOOD	R-VALUE	1.16
BACK	.004" FOIL VAPOR BARRIER	STIFFNESS	33,000 LB-IN/FT^2
THICKNESS	5/16" NOMINAL	IMPACT	300 FT/LB
SIZES	48" X 96" UP TO 60" X 120"	FLAME	CLASS A
FINISH	PPG TRUFORM® COATING		

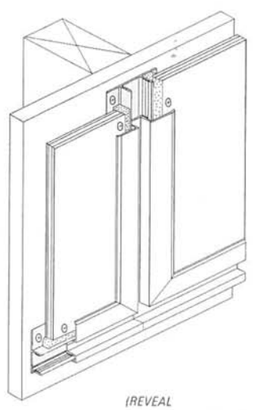

(REVEAL INSTALLATION SHOWN)

06-23-2015

CRAWFORD HOYING development

METAL PANEL DETAILS

MOODY•NOLAN
RESPONSIVE ARCHITECTURE

BRIDGE PARK

DUBLIN, OH

Incorporate an
Adair® Limestone Starter Course

Starter Course

Installing a starter course of Adair® dolomite will maintain the aesthetic integrity of the masonry. Its greater density and lower absorption is ideally suited to resist the conditions at grade.

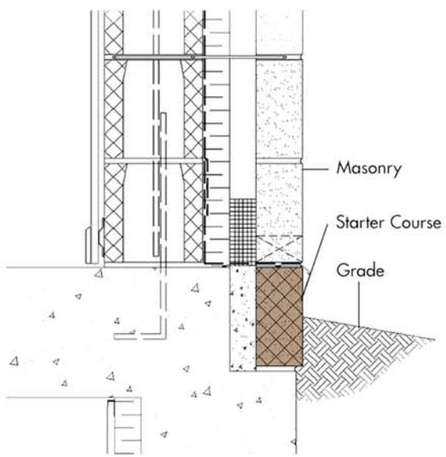

Adair® Limestone starter course

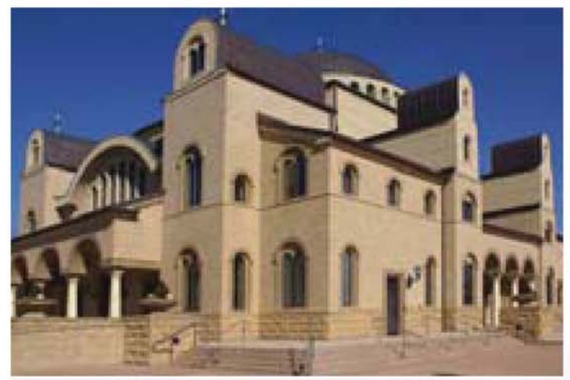

Top Left:
4501 North Fairfax Office Complex
Fairfax, VA
WDG Architects
Renaissance® Wheat Sandblasted

Top Right:
Providence
Palatine, IL
Tinaglia Architects
Renaissance® White Sandblasted

Left:
Saint Nektarios Southeast
Greek Orthodox Parish, Inc.,
Charlotte, NC
One on One Design
Renaissance® Custom Color Smooth and Rocked

Below:
St. George 5th Court House
St. George, UT
VCBO Architecture
Renaissance® Custom Color Cleft Rocked

ARRISCRAFT STONE is used at buildings B1

THE ARRISCRAFT ADVANTAGE:

-High strength, high density, and naturalabsorption translate into superior durability;

-Exceptionally tight dimensional tolerances;

-No cement or chemical additives; Renaissance® is not subject to the degree of shrinkage associated with cement-based products;

-Consistent color throughout the entire stone;Renaissance® can be cut, chiseled and dressed in the field while maintaining its color and texture.

-Arriscraft products can contribute to LEED® points and to sustainability in the LEED categories of Energy and Atmosphere, Materials and Resources, and Innovation in Design.

-Arriscraft offers an industry-unique Lifetime Product Warranty.

06-23-2015

BRIDGE PARK
DUBLIN, OH

TRELLIS SYSTEM CHARACTERISTICS:

-System is a modular framework grid mounted to the exterior wall of the roof deck elevator lobby creating aesthetic living green facades.

-These high quality attractive eco units are constructed to accommodate a captive grow space for various plants and vines.

-Screens are made with a heavy .120 woven wire mesh screen with a unique bridge wire for stabilization.

-Years of beauty and low maintenance.

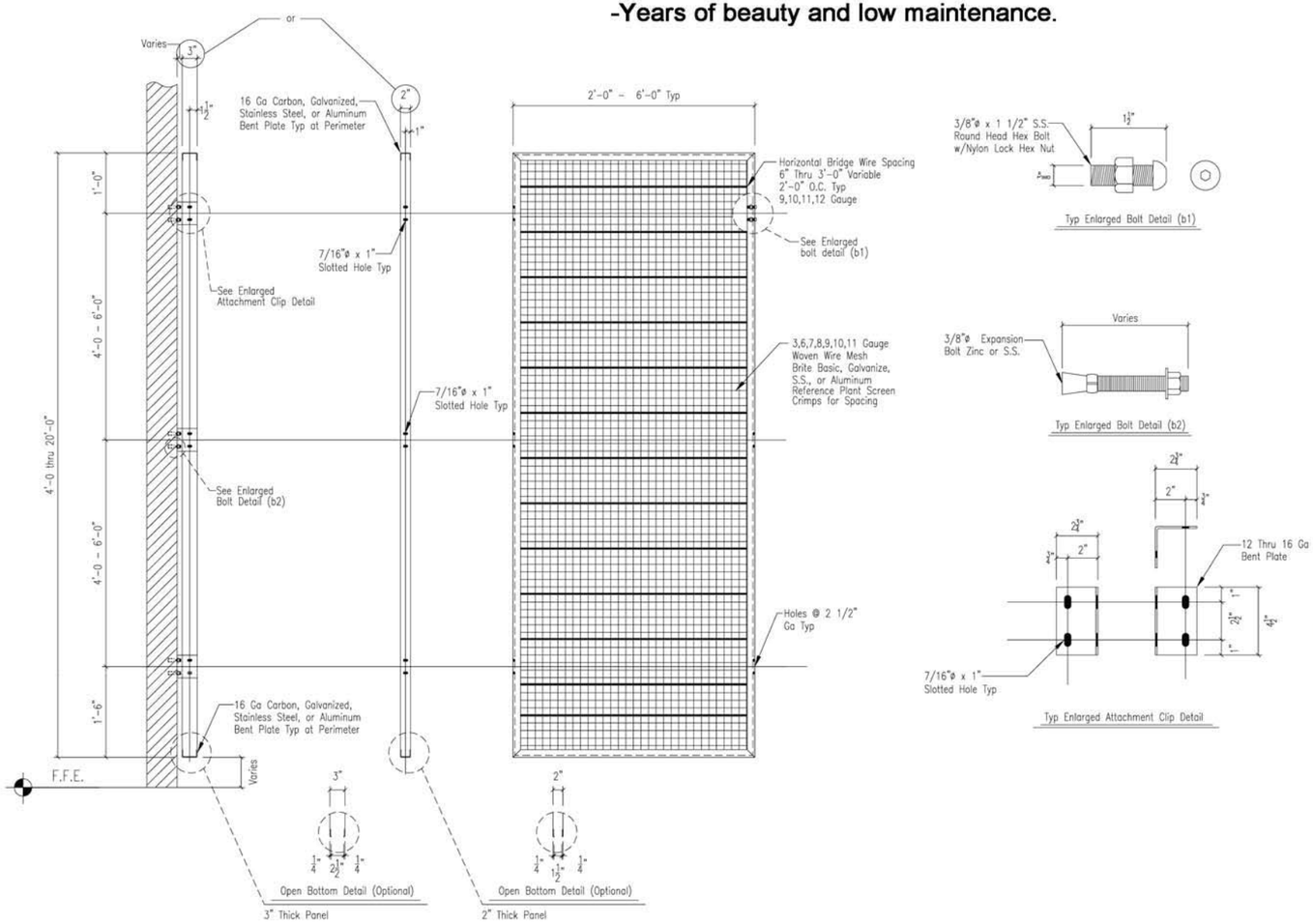

TRELLIS DETAILS

06-23-2015

CRAWFORD HOYING development

MODULAR FACADE TRELLIS SYSTEM

MOODY•NOLAN
RESPONSIVE ARCHITECTURE

RESIDENTIAL
CONDENSING UNIT

DIMENSIONS - ENGLISH

UNIT	SERIES	ELECTRICAL CHARACTERISTICS				A	B	C	D	E	F	G	K	L	M	N	P	OPERATING WEIGHT (LBS)	SHIPPING WEIGHT (LBS)	SHIPPING DIMENSIONS (L x W x H)
		208-230-1-60	230-1-60	208/230-3-60	460-3-60															
CA13NA018	A	X	O	O	O	23 1/8"	24 13/16"	3 3/4"	3/4"	4 7/16"	18 1/16"	7 13/16"	2 13/16"	1/2"	12"	11 3/4"	11 7/8"	108	124	24 1/8" X 24 1/8" X 27 3/16"
CA13NA024	A	X	O	O	O	23 1/8"	24 13/16"	3 3/4"	3/4"	4 7/16"	18 1/16"	7 13/16"	2 13/16"	1/2"	12"	11 3/4"	11 7/8"	111	127	24 1/8" X 24 1/8" X 27 3/16"
CA13NA030	A	X	O	O	O	23 1/8"	28 7/16"	3 3/4"	3/4"	4 7/16"	18 1/16"	7 13/16"	2 13/16"	1/2"	12"	11 3/4"	12 1/2"	114	130	24 1/8" X 24 1/8" X 30 5/8"
CA13NA036	A	X	O	O	O	23 1/8"	35 3/16"	3 7/8"	7/8"	4 7/16"	18 1/16"	7 13/16"	2 13/16"	1/2"	12"	11 3/4"	13 3/4"	127	144	24 1/8" X 24 1/8" X 37 7/16"
CA13NA042	A	X	O	O	O	31 3/16"	31 13/16"	3 7/8"	7/8"	6 9/16"	24 11/16"	9 1/8"	2 15/16"	5/8"	16"	15 1/2"	13 3/4"	172	195	32 3/16" X 32 3/16" X 34"
CA13NA048	A	X	O	O	O	31 3/16"	35 3/16"	3 7/8"	7/8"	6 9/16"	24 11/16"	9 1/8"	2 15/16"	5/8"	16"	15 1/2"	14 1/2"	185	212	32 3/16" X 32 3/16" X 37 7/16"
CA13NA060	A	X	O	O	O	31 3/16"	28 7/16"	3 7/8"	7/8"	6 9/16"	24 11/16"	9 1/8"	2 15/16"	5/8"	16"	15 1/2"	12 3/4"	198	224	32 3/16" X 32 3/16" X 30 5/8"

X = YES
O = NO

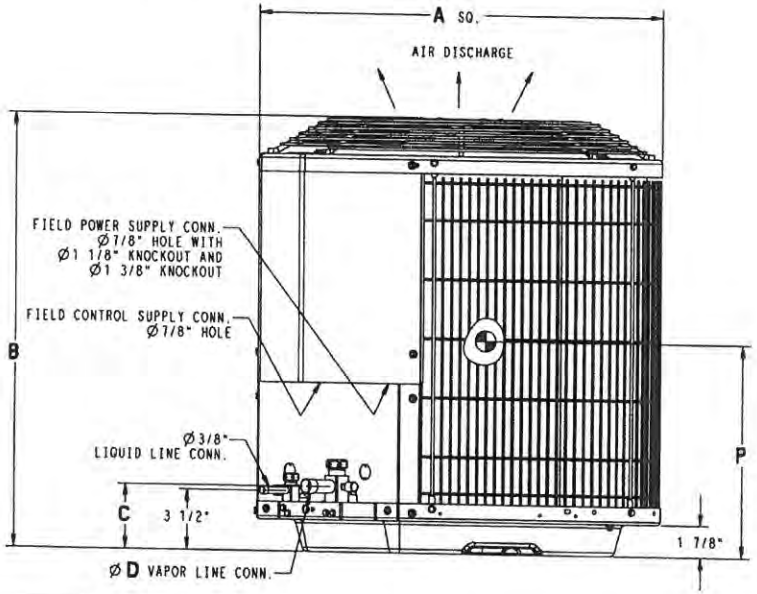

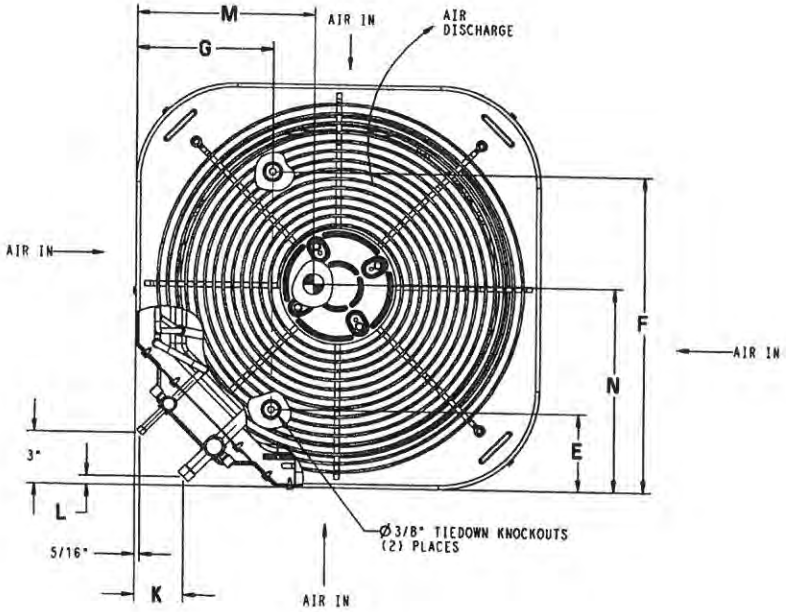

UNIT SIZE	MINIMUM MOUNTING PAD DIMENSIONS
18,24,30,36	23 1/2" X 23 1/2"
--	26" X 26"
42,48,60	31 1/2" X 31 1/2"
--	35" X 35"

TRASH
EXHAUST

Roof Downblast Exhaust
Belt & Direct Drive
GB-101HP • G-103HP

GREENHECK
Building Value in Air.

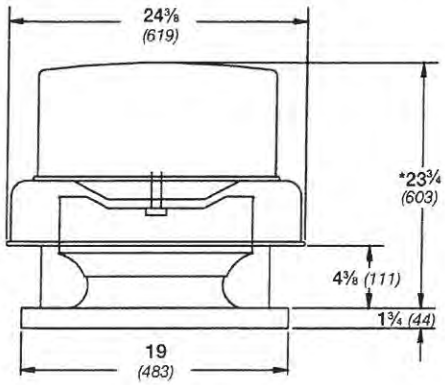

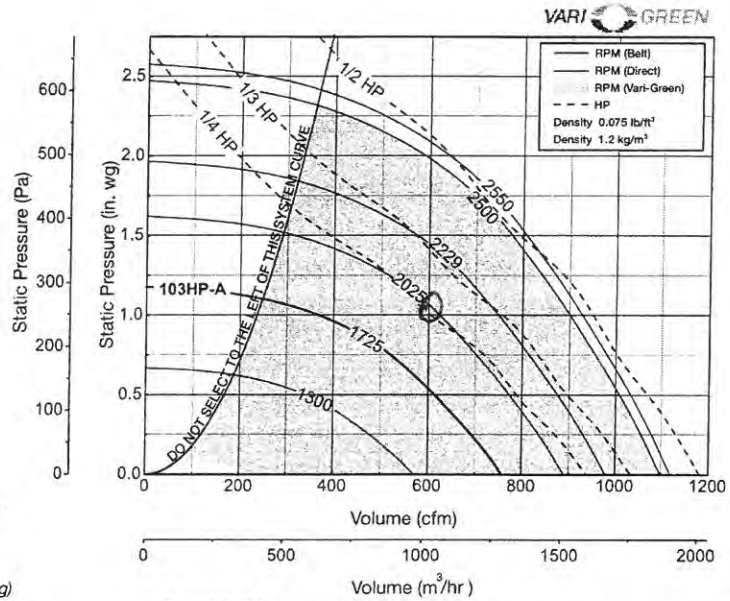

Damper Size = 12 x 12 *(305 x 305)*
Roof Opening = 14½ x 14½ *(368 x 368)*
Shroud Thickness = 0.051 *(1.3)*
Motor Cover Thickness = 0.040 *(1.0)*
Curb Cap Thickness = 0.064 *(1.6)*
^Approximate Unit Weight G/GB = 58/63 lbs. *(26/29 kg)*

~100LBS EA

All dimensions in inches *(millimeters)*. *May be greater depending on motor. ^Weight shown is largest cataloged Open Drip-Proof motor.

Direct Drive RPM

A-1725 RPM	VG-2550 RPM

Motor HP Belt	Motor HP Direct	Fan RPM		Static Pressure in Inches wg 0	0.25	0.5	0.75	1	1.25	1.5	1.75	2	2.25
101HP	103HP												
1/4	VG-1/2	1300	CFM	571	477	342							
			BHP	0.06	0.06	0.07							
			Sones	6.6	5.7	5.3							
		1445	CFM	635	553	449	243						
			BHP	0.08	0.09	0.09	0.08						
			Sones	8.4	7.5	7	6.3						
		1590	CFM	699	626	537	417						
			BHP	0.10	0.11	0.12	0.12						
			Sones	10.4	9.5	9.1	8.3						
	A-1/4	1725	CFM	758	692	613	521	364					
			BHP	0.13	0.14	0.15	0.16	0.15					
			Sones	11.4	10.7	10.6	10.1	10					
		1880	CFM	826	767	697	618	518	337				
			BHP	0.17	0.18	0.19	0.20	0.20	0.18				
			Sones	12.7	12.2	11.9	12	11.4	11.9				
		2025	CFM	890	836	772	702	622	515	313			
			BHP	0.21	0.23	0.24	0.24	0.26	0.25	0.22			
			Sones	14.2	13.6	13.3	13.2	12.6	12	11.4			
1/3		2137	CFM	939	889	830	765	693	607	474			
			BHP	0.25	0.26	0.28	0.28	0.29	0.30	0.28			
			Sones	15.4	14.8	14.4	14.2	13.4	13.1	12.1			
		2229	CFM	979	931	875	814	748	674	574	406		
			BHP	0.28	0.30	0.31	0.32	0.33	0.35	0.33	0.31		
			Sones	15.8	15.4	14.8	14.5	14.1	13.7	13.2	12.0		
1/2		2336	CFM	1026	981	928	871	809	742	661	543	358	
			BHP	0.33	0.34	0.36	0.36	0.37	0.39	0.40	0.37	0.34	
			Sones	16.4	16	15.4	14.9	14.7	14	14.1	13.5	13.6	
		2500	CFM	1098	1056	1008	956	901	840	775	695	583	416
			BHP	0.40	0.42	0.43	0.45	0.45	0.46	0.48	0.48	0.46	0.42
			Sones	17.8	17.4	16.9	16.7	15.8	15.5	14.8	15.2	15.7	16.6
		2550	CFM	1120	1078	1032	982	928	869	807	735	639	497
			BHP	0.43	0.44	0.46	0.47	0.47	0.49	0.51	0.52	0.50	0.47
			Sones	18.2	17.9	17.4	17.2	16.3	16.1	15.1	15.6	16.2	17.2

MAXIMUM BHP AT A GIVEN RPM = $(RPM/3165)^3$
MAXIMUM RPM = 2550
TIP SPEED (ft/min) = RPM x 2.978
MAXIMUM MOTOR FRAME SIZE = 56

Performance certified is for installation type A: Free inlet, Free outlet. Power rating (BHP) does not include transmission losses. Performance ratings include the effects of a birdscreen. The sound ratings shown are loudness values in hemispherical sones at 5 ft. (1.5 m) in a hemispherical free field calculated per AMCA Standard 301. Values shown are for installation type A: free inlet hemispherical sone levels.

Roof Downblast - Exhaust
Belt & Direct Drive
GB-180 • G-183

GREENHECK
Building Value in Air.

FUTURE TOILET
EXHAUST

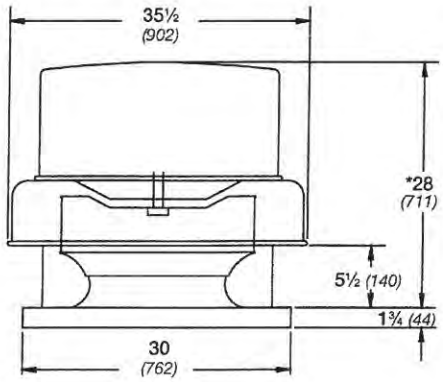

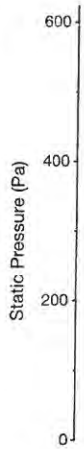

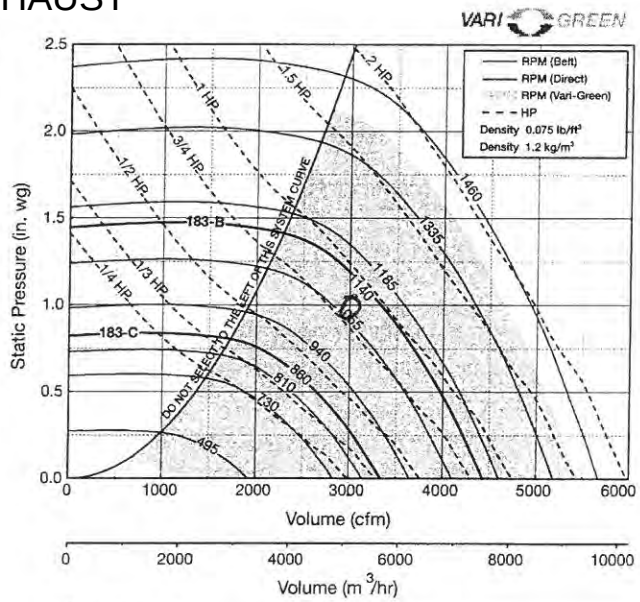

Damper Size = 18 x 18 *(457 x 457)*
Roof Opening = 20½ x 20½ *(521 x 521)*
Shroud Thickness = 0.064 *(1.6)*
Motor Cover Thickness = 0.040 *(1.0)*
Curb Cap Thickness = 0.064 *(1.6)*
^Approximate Unit Weight G/GB = 108/142 lbs. *(49/64 kg)*

-150LBS EA

All dimensions in inches *(millimeters)*. *May be greater depending on motor. ^Weight shown is largest cataloged Open Drip-Proof motor.

Direct Drive RPM

C-860 RPM	B-1140 RPM

Motor HP Belt	Motor HP Direct	Fan RPM		Static Pressure in Inches wg 0	0.125	0.25	0.5	0.75	1	1.25	1.5	1.75	2
180	**183**												
1/4	VG-1	730	CFM	2839	2668	2469	1882						
			BHP	0.21	0.23	0.25	0.25						
			Sones	7.4	8.7	7.2	6.7						
1/3		810	CFM	3150	2997	2832	2375						
			BHP	0.29	0.31	0.33	0.35						
			Sones	8.8	9.9	8.7	8.2						
1/2	C-1/2	860	CFM	3344	3202	3049	2647	2015					
			BHP	0.35	0.36	0.39	0.42	0.4					
			Sones	10.1	10.8	9.8	9.1	8.1					
		940	CFM	3655	3527	3388	3052	2601					
			BHP	0.46	0.47	0.49	0.54	0.54					
			Sones	12.7	12.8	12.0	11.1	10.3					
3/4		1000	CFM	3888	3769	3638	3339	2953	2387				
			BHP	0.55	0.57	0.58	0.64	0.66	0.63				
			Sones	15.2	14.7	13.7	13.0	11.9	11.1				
		1055	CFM	4102	3990	3867	3596	3252	2811				
			BHP	0.65	0.67	0.68	0.74	0.77	0.77				
			Sones	16.2	15.7	14.9	14.0	12.9	12.4				
1	B-1	1140	CFM	4433	4329	4216	3980	3684	3328	2856			
			BHP	0.81	0.84	0.85	0.93	0.96	0.98	0.95			
			Sones	17.9	17.4	16.8	16.0	15.1	14.3	13.6			
	VG-2	1185	CFM	4608	4508	4401	4179	3900	3575	3178	2499		
			BHP	0.91	0.94	0.96	1.03	1.07	1.1	1.09	0.99		
			Sones	19.0	18.4	17.8	17.1	16.2	15.4	14.7	13.7		
1½		1335	CFM	5191	5102	5010	4814	4599	4344	4052	3713	3262	
			BHP	1.31	1.33	1.36	1.41	1.49	1.54	1.57	1.56	1.51	
			Sones	22	22	21	21	19.9	19.2	18.7	18.2	17.6	
2		1400	CFM	5444	5359	5273	5086	4892	4655	4401	4097	3747	3253
			BHP	1.51	1.54	1.56	1.61	1.71	1.75	1.81	1.81	1.79	1.71
			Sones	24	23	23	22	22	21	21	20	19.7	19.2
		1460	CFM	5677	5596	5514	5336	5155	4938	4699	4426	4123	3765
			BHP	1.71	1.74	1.77	1.81	1.93	1.97	2.03	2.05	2.05	2.02
			Sones	26	25	24	24	23	23	22	22	22	21

MAXIMUM BHP AT A GIVEN RPM = $(RPM/1149)^3$
MAXIMUM RPM = 1460
TIP SPEED (ft/min) = RPM x 4.843
MAXIMUM MOTOR FRAME SIZE = 184T

Performance certified is for installation type A: Free inlet, Free outlet. Power rating (BHP) does not include transmission losses. Performance ratings include the effects of a birdscreen. The sound ratings shown are loudness values in hemispherical sones at 5 ft. (1.5 m) in a hemispherical free field calculated per AMCA Standard 301. Values shown are for installation type A: free inlet hemispherical sone levels.

SWB-116 - Belt Drive
Series 100

GREENHECK
Building Value in Air.

FUTURE DISHWASHER

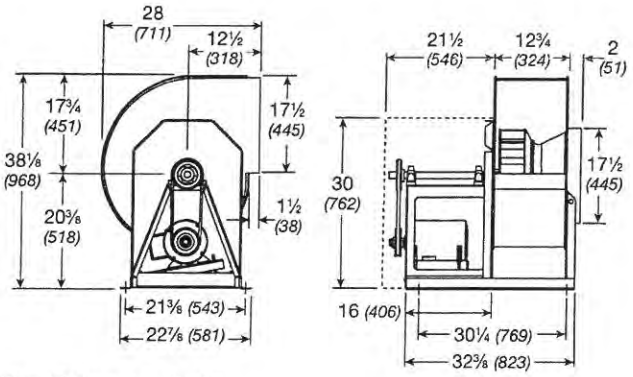

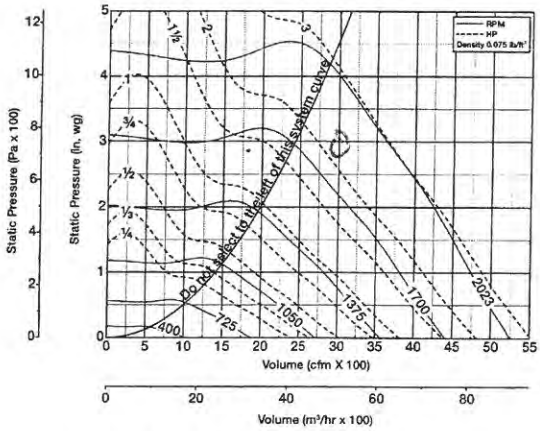

Wheel Diameter = 17 *(432)*
Shaft Diameter = 1 *(25)*
Outlet Area = 1.52 ft^2 *(0.14 m^2)*
^Approximate Unit Weight = 241 lb. *(109 kg)* ← 250 LBS EA

All dimensions in inches *(millimeters)*
For additional discharge positions see page 15
^Weight shown is largest cataloged Open Drip Proof motor

Maximum BHP at a given RPM = (RPM/1403)^3
(Maximum KW at a given RPM = (RPM/1547)^3)
Maximum RPM = 2023
Tip Speed (ft/min.) = RPM x 4.32
(Tip Speed (m/s) = RPM x 0.0219)
Maximum Motor Frame Size = 184T

SWB-116

CFM	OV		Static Pressure in Inches wg									
			0.5	0.75	1	1.25	1.5	2	2.5	2.75	3	3.5
1200	789	RPM	750									
		BHP	0.15									
		Sones	5.8									
1560	1026	RPM	846	943	1026							
		BHP	0.22	0.30	0.38							
		Sones	7.1	7.8	8.7							
1920	1263	RPM	949	1039	1120	1192	1259					
		BHP	0.31	0.40	0.50	0.60	0.71					
		Sones	8.8	9.6	10.7	11.5	12.0					
2280	1500	RPM	1061	1141	1216	1287	1352	1470	1576			
		BHP	0.42	0.53	0.65	0.76	0.88	1.12	1.38			
		Sones	10.9	11.8	12.5	12.9	13.3	14.4	16.4			
2640	1737	RPM	1182	1250	1320	1385	1448	1564	1666	1715	1762	1851
		BHP	0.57	0.69	0.82	0.96	1.09	1.36	1.64	1.79	1.93	2.23
		Sones	13.5	13.8	14.1	14.6	15.1	15.9	17.4	18.4	19.5	22
3000	1974	RPM	1306	1369	1429	1490	1548	1659	1761	1808	1853	1940
		BHP	0.76	0.89	1.03	1.18	1.34	1.64	1.95	2.11	2.26	2.59
		Sones	15.4	15.8	16.1	16.6	17.1	18.6	19.9	21	21	22
3360	2211	RPM	1432	1491	1545	1599	1654	1758	1857	1903	1948	
		BHP	0.99	1.14	1.29	1.45	1.62	1.96	2.30	2.47	2.64	
		Sones	17.6	18.0	18.4	18.9	19.6	21	23	23	23	
3720	2447	RPM	1560	1615	1667	1716	1764	1863	1955	2001		
		BHP	1.27	1.43	1.60	1.76	1.94	2.32	2.70	2.89		
		Sones	20	21	21	22	23	24	25	26		
4080	2684	RPM	1690	1742	1790	1837	1881	1971				
		BHP	1.60	1.78	1.96	2.14	2.32	2.72				
		Sones	23	24	25	25	26	27				
4440	2921	RPM	1821	1869	1916	1960	2002					
		BHP	1.99	2.18	2.38	2.58	2.77					
		Sones	27	28	28	29	30					
4800	3158	RPM	1953	1999								
		BHP	2.44	2.65								
		Sones	32	32								

Performance certified is for installation Type B - Free inlet, Ducted outlet. Power rating (Bhp) does not include transmission losses. Performance ratings do not include the effects of appurtenances (accessories). The AMCA Certified Ratings Seal applies to air performance only.

SWB-218 - Belt Drive
Series 200

GREENHECK
Building Value in Air.

FUTURE GREASE EXHAUST

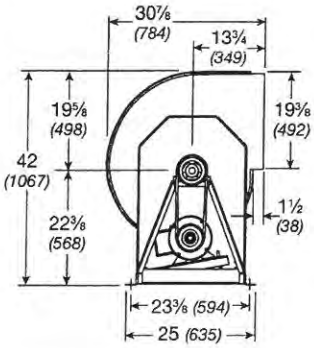

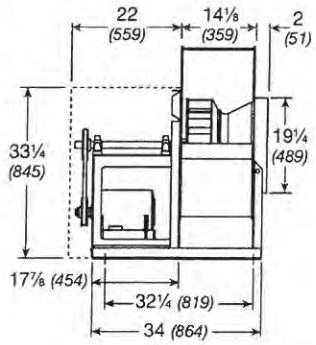

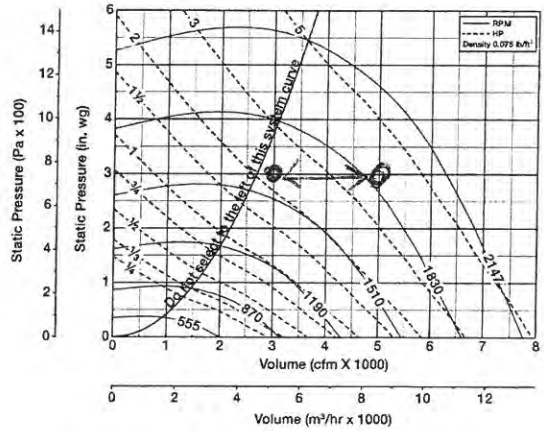

Wheel Diameter = 18⅝ *(473)*
Shaft Diameter = 1¼ *(32)*
Outlet Area = 1.87 ft² *(0.17 m²)*
^Approximate Unit Weight = 324 lb. *(147 kg)* ← 352LBS

All dimensions in inches *(millimeters)*
For additional discharge positions see page 15
^Weight shown is largest cataloged Open Drip Proof motor

Maximum BHP at a given RPM = $(RPM/1196)^3$
(Maximum KW at a given RPM = $(RPM/1319)^3$)
Maximum RPM = 2147
Tip Speed (ft/min.) = RPM x 4.78
(Tip Speed (m/s) = RPM x 0.0243)
Maximum Motor Frame Size = 213T

SWB-218

CFM	OV		Static Pressure in Inches wg									
			0.5	1	1.5	2	2.5	3	3.5	4	4.5	5
		RPM	762	963	1136							
2000	1070	BHP	0.26	0.49	0.75							
		Sones	10.1	11.3	13.4							
		RPM	862	1023	1185	1330	1459					
2500	1337	BHP	0.37	0.62	0.92	1.24	1.58					
		Sones	10.1	11.6	13.0	15.2	17.9					
		RPM	974	1110	1245	1380	1507	1623	1730			
3000	1604	BHP	0.52	0.80	1.12	1.47	1.85	2.24	2.65			
		Sones	11.5	12.6	13.9	15.5	18.3	21	24			
		RPM	1092	1211	1327	1443	1557	1672	1779	1878	1971	2060
3500	1872	BHP	0.72	1.03	1.36	1.74	2.15	2.58	3.02	3.48	3.95	4.43
		Sones	13.6	14.2	15.2	16.8	19.1	22	25	27	29	31
		RPM	1218	1322	1423	1525	1626	1727	1828	1927	2020	2108
4000	2139	BHP	0.97	1.32	1.68	2.07	2.51	2.95	3.43	3.93	4.44	4.96
		Sones	15.7	16.4	17.3	18.7	21	23	25	27	29	32
		RPM	1346	1438	1530	1619	1709	1800	1890	1979	2069	
4500	2406	BHP	1.28	1.66	2.07	2.48	2.92	3.41	3.90	4.42	4.96	
		Sones	18.2	18.8	19.6	21	23	24	26	28	30	
		RPM	1475	1557	1643	1723	1804	1885	1967	2048		
5000	2764	BHP	1.66	2.08	2.52	2.97	3.43	3.91	4.45	5.00		
		Sones	21	21	22	24	25	26	28	29		
		RPM	1605	1683	1758	1834	1907	1981	2055			
5500	2941	BHP	2.10	2.58	3.04	3.54	4.03	4.54	5.07			
		Sones	24	24	25	26	27	28	30			
		RPM	1737	1810	1877	1949	2017	2084				
6000	3209	BHP	2.63	3.15	3.65	4.18	4.72	5.25				
		Sones	27	28	28	29	30	31				
		RPM	1869	1938	2002	2065	2131					
6500	3476	BHP	3.26	3.81	4.37	4.91	5.49					
		Sones	31	31	31	32	33					
		RPM	2003	2067	2128							
7000	3743	BHP	3.98	4.57	5.18							
		Sones	34	35	35							

Performance certified is for installation Type B - Free inlet, Ducted outlet. Power rating (Bhp) does not include transmission losses. Performance ratings do not include the effects of appurtenances (accessories). The AMCA Certified Ratings Seal applies to air performance only.

Typical Installations

GREENHECK
Building Value in Air.

General Clean Air or Fume Hood (Non-Grease)

The SFD, SFB, SWD and SWB are designed for applications ranging from clean air to contaminated air. Typical installations are shown below. Installations must include a means for inspecting, cleaning and servicing the exhaust fan.

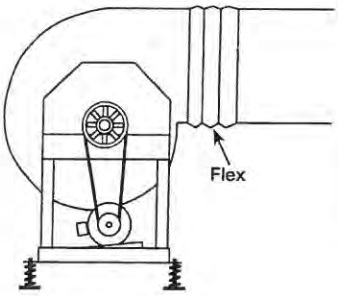

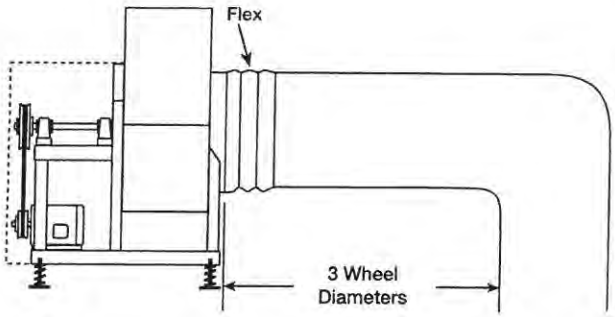

UL 762 KITCHEN EXHAUST

SWB Commercial Kitchen (Grease)

Greenheck's SWB Series 200 and 300 are designed to meet restaurant and foodservice applications. These fans are UL and cUL Listed for grease removal and have been tested under elevated temperature conditions.

Due to high temperatures and grease-laden airstreams in commercial kitchen ventilation, system designers must be aware of governing codes and guidelines. The National Fire Protection Association (NFPA) is the primary source used by many local codes for commercial kitchen ventilation systems. Local code authorities should be consulted before proceeding with any kitchen ventilation project.

Installation must include a means for inspecting, cleaning and servicing the exhaust fan.

Fans selected for grease removal must include a weatherhood, access door and 1-inch *(25 mm)* drain connection. For grease applications where the fan is mounted indoors, the welded scroll option must be selected. An outlet guard is strongly recommended when the fan discharge is accessible. When an outlet guard is not ordered with the fan, it must be provided by the installer. An upblast discharge is recommended. No dampers are to be used in the system.

The fan discharge must be a minimum of 40 inches *(1016 mm)* above the roof line and the exhaust duct must be fully welded to a minimum distance of 18 inches *(457 mm)* above the roof surface.

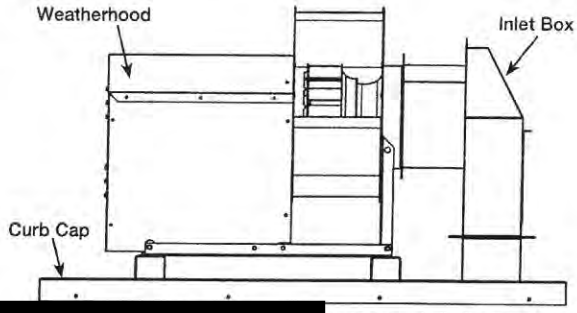

Inlet box and curb cap are used when space is limited and a 90° turn is required less than 3 wheel diameters from the inlet.

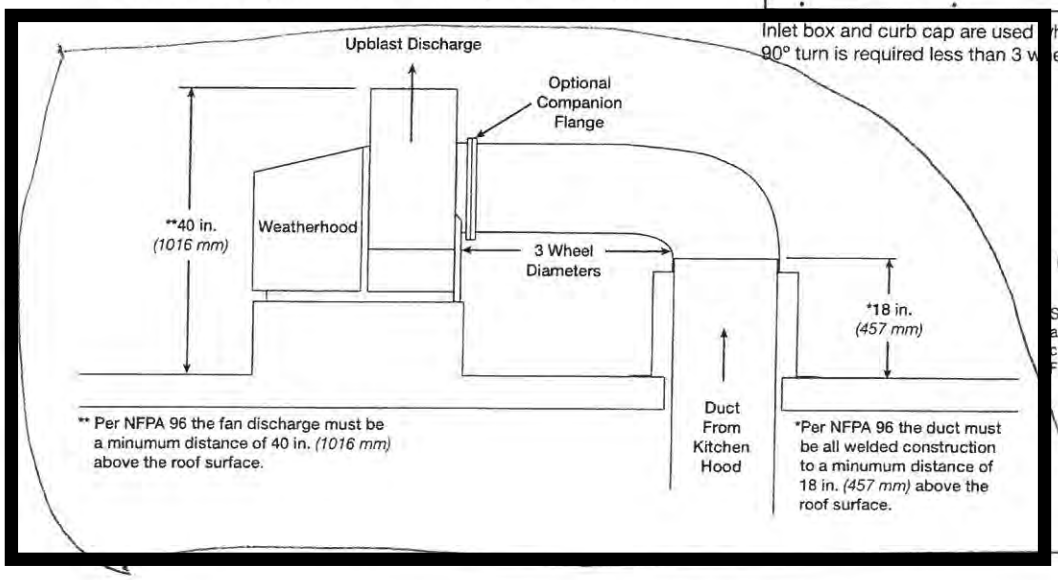

c UL US LISTED

SWB Series 200 and 300 models are listed for grease removal (UL/cUL 762).
File no. MH11745

Mounting Options

GREENHECK
Building Value in Air.

Vibration Isolators

Base-mounted neoprene or spring isolators are available to lessen mechanical vibration and assure quiet operation. Free-standing, restrained and housed spring isolators are also available. Isolators are sized to match the weight of each fan.

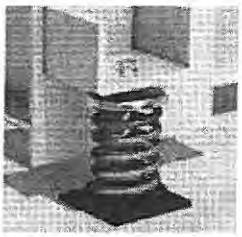

Free-Standing Open Spring Mounts -

Type 3, 1-inch Deflection

Free-standing spring isolators are unhoused laterally stable steel springs. They provide a minimum horizontal stiffness of 0.8 times the rated vertical stiffness and provide an additional 50% overload capacity. These isolators are equipped with a top-mounted adjusting bolt and an acoustical non-skid base. Springs are color coded to indicate load capacity.

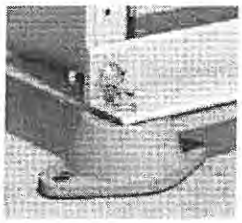

Rubber Mounts -

Type 2, ¼-inch and ½-inch Deflection

Neoprene mountings consist of a steel top plate and base plate completely embedded in colored (oil-resistant) neoprene for easy identification of capacity. Neoprene mountings are furnished with a tapped hole in the center. This enables the equipment to be bolted securely to the rubber mount.

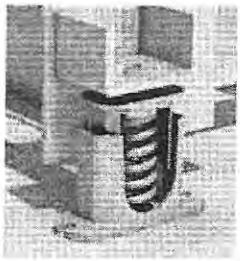

Housed Spring Mounts

Type 4B, 1-inch Deflection

Housed spring isolators consist of steel springs assembled into a telescoping housing with a top-mounted adjusting bolt and an acoustical non-skid base. Housed spring isolators include resilient inserts to prevent metal-to-metal contact and provide snubbing for side loads. Springs provide an additional 50% overload capacity and are color coded to indicate load capacity.

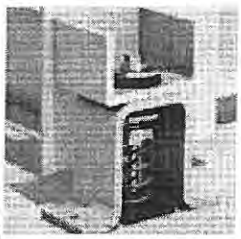

Restrained Spring Mounts -

Type 4A, 1-inch Deflection

Restrained spring isolators consist of laterally stable, free-standing springs assembled into a steel housing. These assemblies are designed for vertical and horizontal motion restraint. Restrained spring isolators can be used for blocking during equipment installation and are provided with leveling bolts. Springs provide 50% overload capacity and are color coded or identified to indicate load capacity. Restrained spring mounts are recommended for equipment subject to wind loading or large torquing forces.

Direct Mount - Type A

No base required. Isolators are attached directly to equipment. Direct isolation can be used if equipment is unitary and rigid without the use of additional support. If there is any doubt whether or not equipment can be supported directly on isolators, use rails, bases or consult the factory.

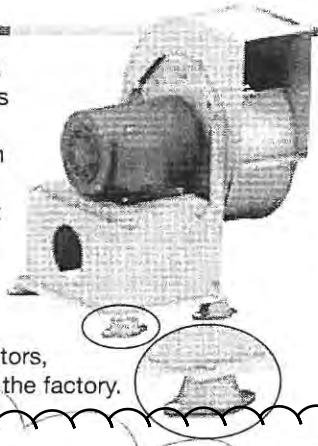

Mounting Rails

with Isolators

Isolation mounting rails are available with either rubber mount, free-standing open or restrained spring isolators. The isolators are mounted between aluminum rails that run the length of the fan base. Isolation rails provide easy installation on isolated systems, and are ideal for applications where there is a large overhung load. Mounting rails are available for fans up to size 36.

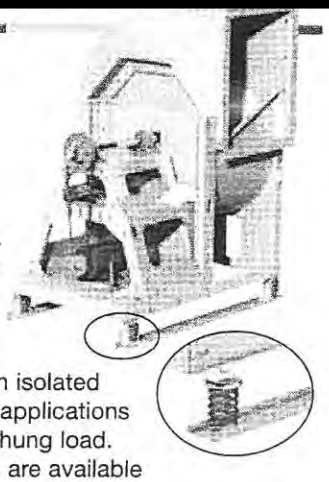

Equipment Supports

Models GESS and GESR equipment supports are available for roof mounting of utility fans up to size 36. Equipment supports are available in a number of lengths, widths, heights, and can also be built for a pitched roof.

FUTURE RESTROOM MUA UNIT

AAON

AAON **RN SERIES ROOFTOP UNITS** CONTINUE TO LEAD THE PACKAGED ROOFTOP EQUIPMENT INDUSTRY IN PERFORMANCE AND SERVICEABILITY. DOUBLE WALL RIGID POLYURETHANE FOAM INSULATED CABINET CONSTRUCTION AND DIRECT DRIVE BACKWARD CURVED PLENUM FANS ALLOW RN SERIES UNITS TO HAVE QUIET, ENERGY EFFICIENT AIR FLOW WITH HIGH STATIC PRESSURE CAPABILITIES. RN SERIES UNITS ALSO FEATURE LOCKABLE HINGED DOORS WHICH PROVIDE SERVICE ACCESS TO ALL SECTIONS OF THE UNIT.

Applications

- Air-cooled condenser or air-source heat pump packaged DX rooftop units, 6-140 tons.
- Water-cooled condenser, water-source heat pump, or geothermal heat pump configurations.
- Chilled water or non-compressorized DX air handling units, 1,100-55,500 cfm.
- Makeup air capability, up to 100% outside air, to meet ventilation requirements.
- High performance hot water, steam, electric, and gas heating.
- Variable capacity and variable speed R-410A scroll compressors for load matching cooling and improved part load efficiency.

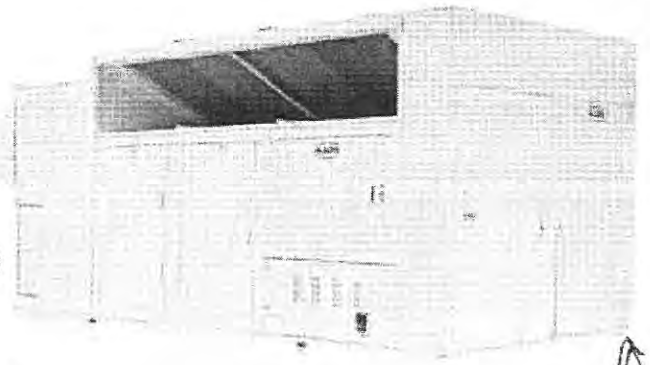

▲ 26 & 31 - 70 ton RN Series Air-Cooled Condenser Packaged Rooftop Unit.

APPROX. 6,000 LBS

Construction

- Two-inch double wall rigid polyurethane foam panel cabinet construction has a thermal resistance of R-13 or greater, which exceeds the R-value of a cabinet with four-inch thick fiberglass construction. Panels include a thermal break, with no metal contact from inside to outside, to prevent heat transfer through the panel and prevent condensation on the outside of the cabinet. The inner wall protects the insulation from moisture damage, prevents microbial growth, and is easy to clean. This type of construction also makes the cabinet more rigid and resistant to damage, provides increased sound dampening, and reduces air leakage and infiltration.

Don't see the specific product you need?
AAON can meet your requirements with Custom Equipment designed specifically for your exact application and job specifications.
Visit www.aaon.com or call 918.583.2266 to locate a representative near you.

▲ Cutaway of panel showing thermal break and foam core.

- Access doors with full length stainless steel piano hinges and quarter turn lockable handles provide improved reliability over single point hinges and make the unit easily serviceable.
- Corrosion resistant exterior polyurethane paint exceeds a 2,500 hour salt spray test.
- Double sloped stainless steel drain pans eliminate standing water which can support microbial growth and stainless steel construction prevents corrosion that could lead to water leaks and contaminants in the air stream.

Fans and Blowers

- Direct drive backward curved plenum supply fans with rubber isolation mounts are more energy efficient, quieter, and require less maintenance than belt driven fans.
- VFD controlled supply, exhaust, and return fans for precise air flow control, building pressure control, and reduced power consumption.

Controls

- Labeled electrical components and color-coded wiring match the unit specific color-coded wiring diagram which is laminated and permanently affixed inside the control compartment.
- Factory provided or customer provided controller can be selected to meet existing or new building control architecture.
- Unit controls and compressors are contained within compartment isolated from the air stream for ease of service and quiet operation.
- Run test report, color-coded wiring diagram, and Installation, Operation and Maintenance manual with startup form is included in control access compartment of every unit.

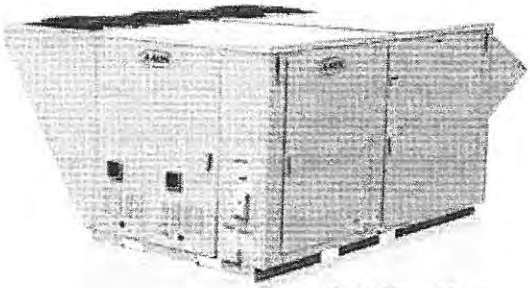

▲ 6 - 25 & 30 ton RN Series Air-Cooled Condenser Packaged Rooftop Unit.

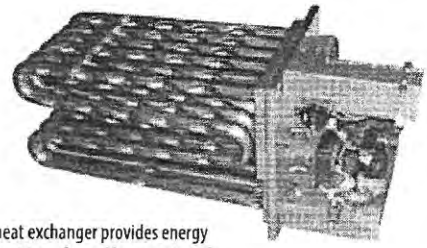

▶ Dimpled heat exchanger provides energy efficient heat transfer and has no internal turbulator, which can corrode over time.

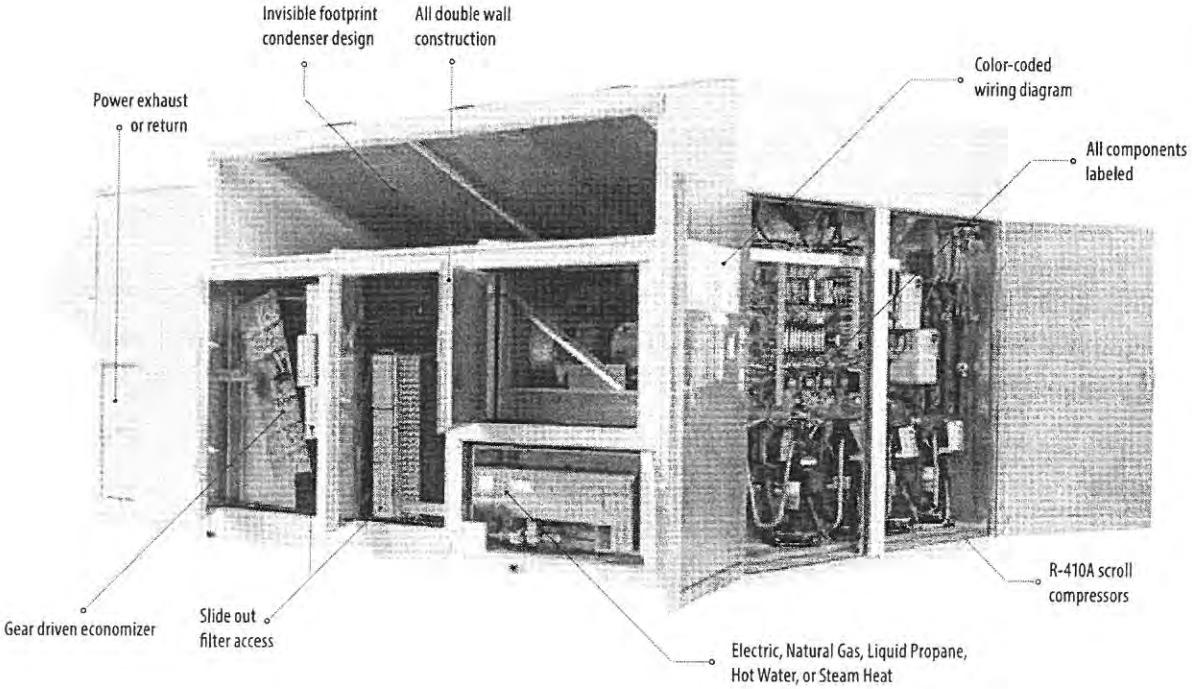

Features and Options

- Variable capacity and variable speed R-410A scroll compressors for load matching cooling and improved part load efficiency.
- Multiple methods of humidity control including: High Capacity Cooling Coils, Return Air Bypass, Mixed Air Bypass, and Modulating Humidity Control which provides energy efficient dehumidification, even with low sensible heat loads, without the temperature swings common with on/off reheat systems.
- Modulating gas heat and SCR electric heat provide energy efficient, consistent supply air temperature heating and improved occupancy comfort.
- Factory installed, sensible or enthalpy, gear driven economizer allows for free cooling.
- Multiple high efficiency filtration options, with up to a MERV 14 efficiency rating.
- Factory installed total and sensible AAONAIRE® energy recovery wheels save cooling and heating dollars.
- Polymer e-coated coils are available to extend the life of the coils and protect them in corrosive environments.
- Interior corrosion protection option protects interior components of the unit in corrosive environments.
- VFD controlled or ECM driven condenser fans for head pressure control, reduced power consumption and lower sound levels at off design ambient conditions.

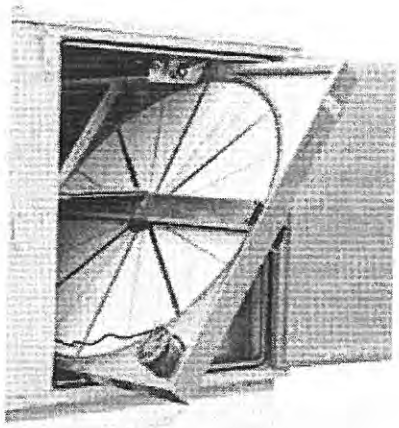

▲ Factory installed AAONAIRE® energy recovery wheel saves heating and cooling energy.

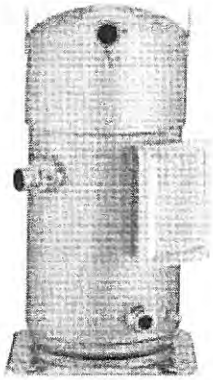

◀ VFD Controlled Variable Speed Scroll Compressor

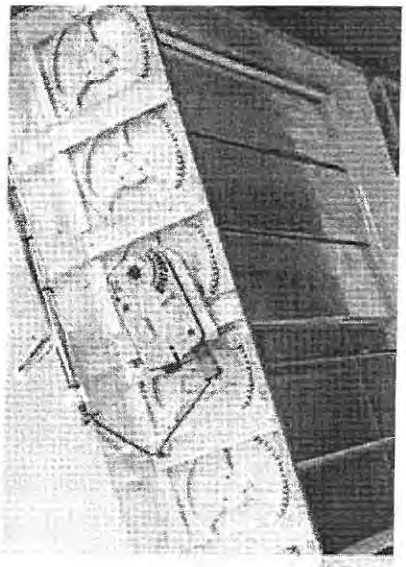

▲ Gear driven economizer eliminates the excess play and binding that occurs with linkage type economizers.

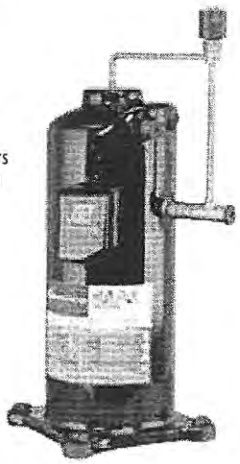

▶ Variable capacity scroll compressors provide load matching cooling and improve part load efficiency.

RN Model	Cabinet	Nominal cfm	Width	Height*	Length*
RN-006	A	2,200	79	44	82
RN-007		2,500			
RN-008		2,800			
RN-010		3,400			
RN-009	B	4,000	96	50	88
RN-011		4,600			
RN-013		5,200			
RN-015		5,800			
RN-016	C	4,800	101	59	110
RN-018		5,400			
RN-020		6,000			
RN-025		7,500			
RN-030		9,000			
RN-026	D	8,600	100 8'4"	97 8'-1"	155 12'-11"
RN-031		10,100			
RN-040		12,800			
RN-050		15,000			
RN-060		18,000			
RN-070		21,000			
RN-055	E	21,000	142	+ 18" CURB 9'-7" TALL	241
RN-065		24,000			
RN-075		27,000			
RN-090		22,000		102	303
RN-105		26,500			
RN-120		31,000			
RN-130		34,000			
RN-140		37,000			

**Dimensions may vary depending on options selected.*
All dimensions are in inches.
Design cfm may be 30-50% greater or less than nominal cfm.

▼ 55, 65 and 75-140 ton RN Series Air-Cooled Condenser Packaged Rooftop Unit with Microchannel Condensor Coils.

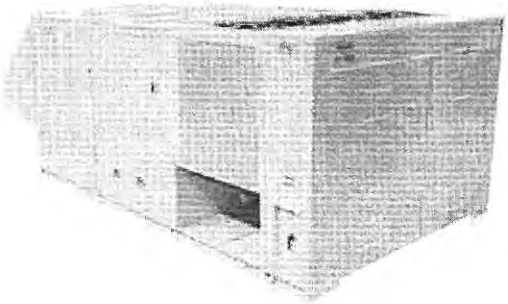

◀ Microchannel condenser coils are more efficient, lighter, and use less refrigerant than traditional fin and tube condenser coils.

TYPICAL CORRIDOR
UNIT UP TO 5 TON (900 LBS.)

TYP.
(U

TRANE

Dimensional Data

Figure 13. Cooling and gas/electric - 4-5 tons high efficiency - horizontal airflow supply and return

Note: All dimensions are in inches/millimeters.

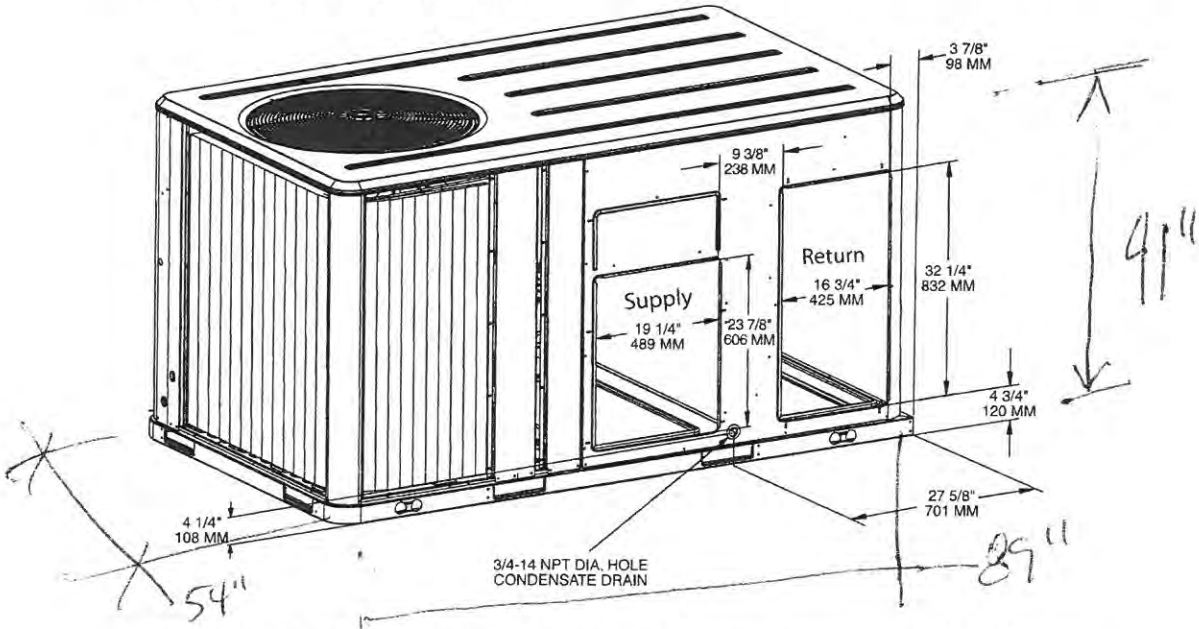

Figure 14. Cooling and gas/electric - 4-5 tons high efficiency - unit clearance and roof opening

Note: All dimensions are in inches/millimeters.

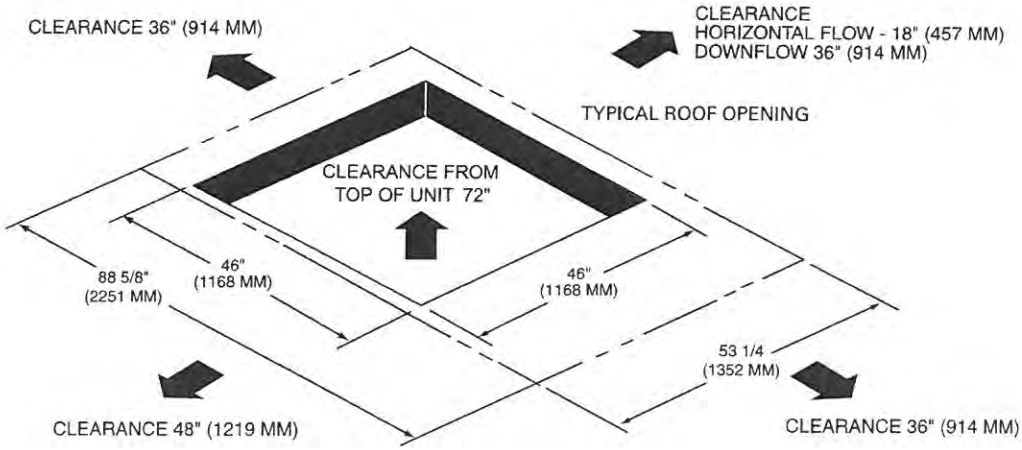

Figure 15. Cooling and gas/electric - 4-5 tons high efficiency - roof curb

Note: All dimensions are in inches/millimeters.

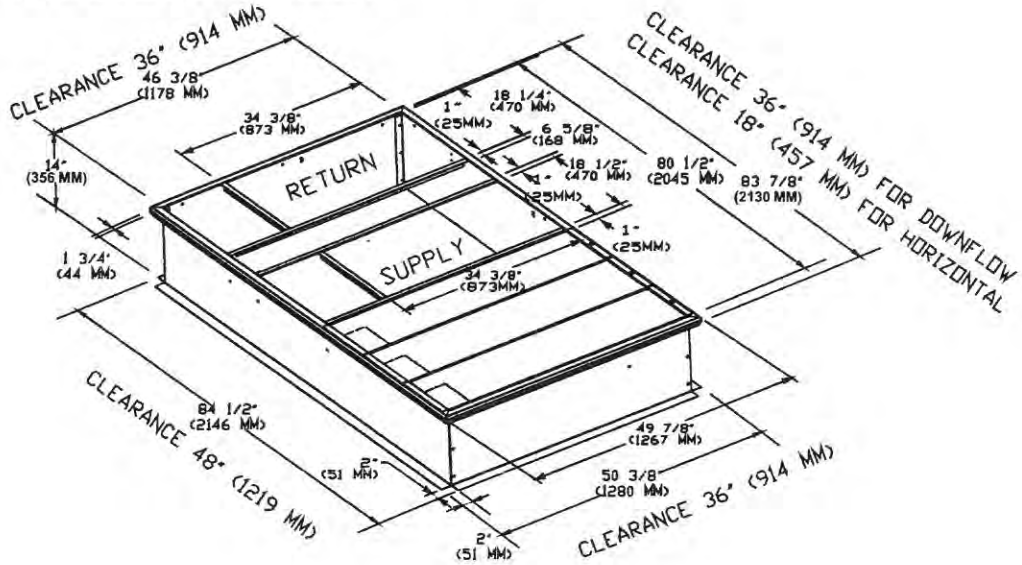

Figure 16. Cooling and gas/electric - 4-5 tons high efficiency - downflow duct connections field fabricated

Note: All dimensions are in inches/millimeters.
Note: See "Clearance required from duct to combustible surfaces (inches)," p. 18 for duct clearance to combustible materials.

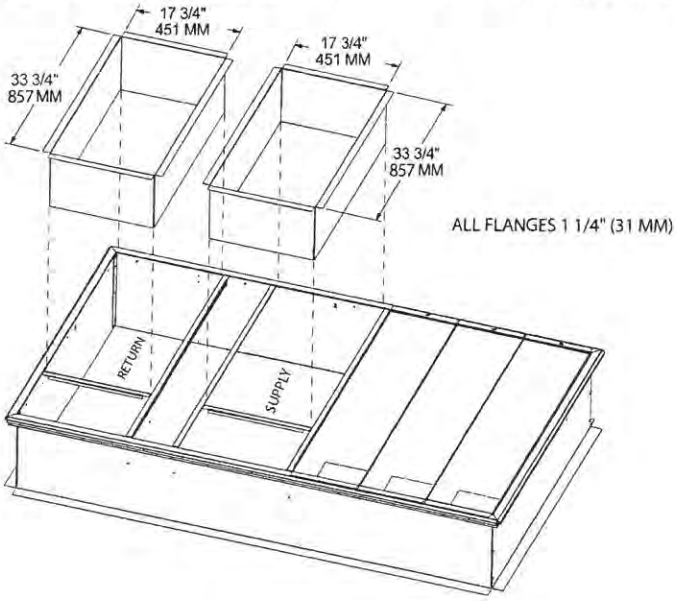

Figure 17. Cooling and gas/electric - 4-5 tons high efficiency - economizer, manual or motorized fresh air damper

Note: All dimensions are in inches/millimeters.

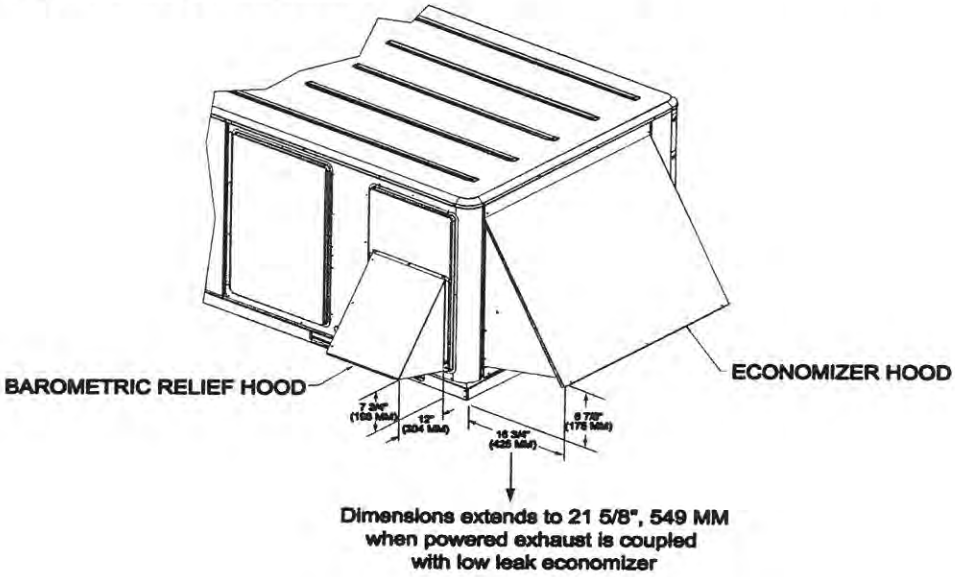

Figure 18. Cooling and gas/electric - 4-5 tons high efficiency - swing diameter for hinged door(s) option

Note: All dimensions are in inches/millimeters.

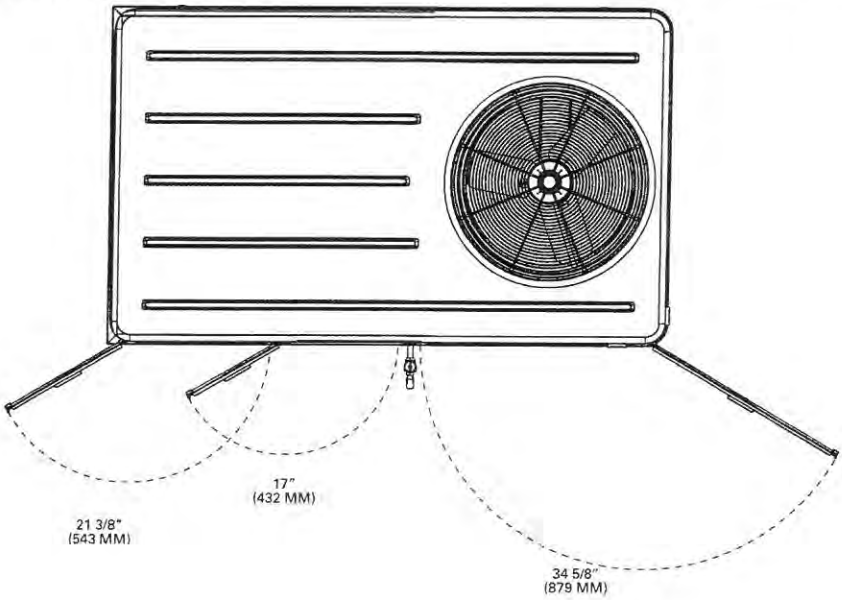

Weights

Table 30. Maximum unit & corner weights (lbs) and center of gravity dimensions (in.) - cooling models

Unit		Maximum Model Weights[a]		Corner Weights[b]				Center of Gravity (in.)	
Tons	Model No.	Shipping	Net	A	B	C	D	Length	Width
3	THC037E	614	544	163	144	111	125	33	19
4	THC047E	787	692	220	178	132	163	40	23
5	THC067E	841	746	241	193	139	173	39	22

(a) Weights are approximate.
(b) Corner weights are given for information only.

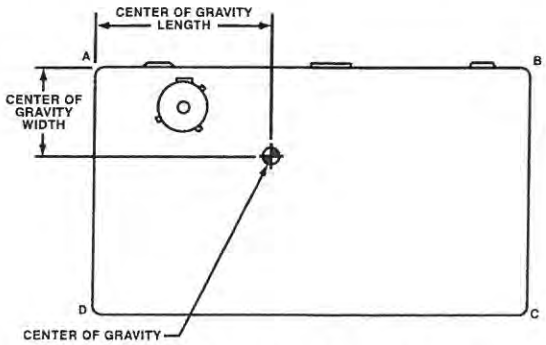

Table 31. Maximum unit & corner weights (lbs) and center of gravity dimensions (in.) - gas/electric models

Unit		Maximum Model Weights[a]		Corner Weights[b]				Center of Gravity (in.)	
Tons	Model No.	Shipping	Net	A	B	C	D	Length	Width
3	YHC037E	676	606	178	162	126	139	33	19
4	YHC047E	858	763	238	200	148	176	40	23
5	YHC067E	917	822	261	218	156	187	40	22

(a) Weights are approximate.
(b) Corner weights are given for information only.

Table 32. Factory installed options (fiops)/accessory net weights (lbs)[a],[b]

	T/YHC037E Net Weight	T/YHC047E-067E Net Weight
Accessory	3 Tons	4-5 Tons
460V/575V IDM Transformer[c]	29	29
Barometric Relief	7	10
Belt Drive Option (3 phase only)	31	31
Coil Guards	12	20
Economizer	26	36
Electric Heaters[d]	15	30
Hinged Doors	10	12
Low Leak Economizer	68	93
Manual Outside Air Damper	16	26
Motorized Outside Air Damper	20	30

continued on next page

Weights

Table 32. Factory installed options (fiops)/accessory net weights (lbs)[a],[b] (continued)

Accessory	T/YHC037E Net Weight 3 Tons	T/YHC047E-067E Net Weight 4-5 Tons
Novar Control	8	8
Oversized Motor	5	8
Powered Convenience Outlet	38	38
Powered Exhaust	40	40
Reheat Coil	12	14
Roof Curb	61	78
Smoke Detector, Supply	5	5
Smoke Detector, Return	7	7
Stainless Steel Heat Exchanger[e]	4	6
Through the Base Electrical	8	13
Through the Base Gas	5	5
Unit Mounted Circuit Breaker	5	5
Unit Mounted Disconnect	5	5

(a) Weights for options not listed are <5 lbs.
(b) Net weight should be added to unit weight when ordering factory-installed accessories.
(c) Apply weight with all 460V/575V units.
(d) Applicable to Cooling units only.
(e) Applicable to Gas/Electric units only.

Roof Downblast Exhaust
Belt & Direct Drive
GB-101HP • G-103HP

GREENHECK
Building Value in Air.

TRASH EXHAUST

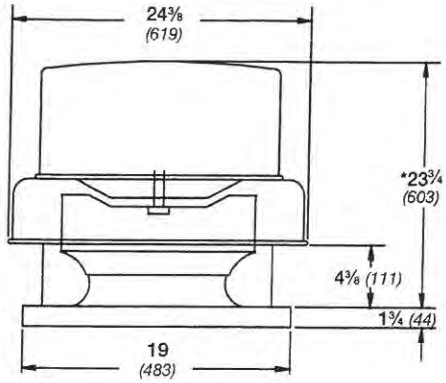

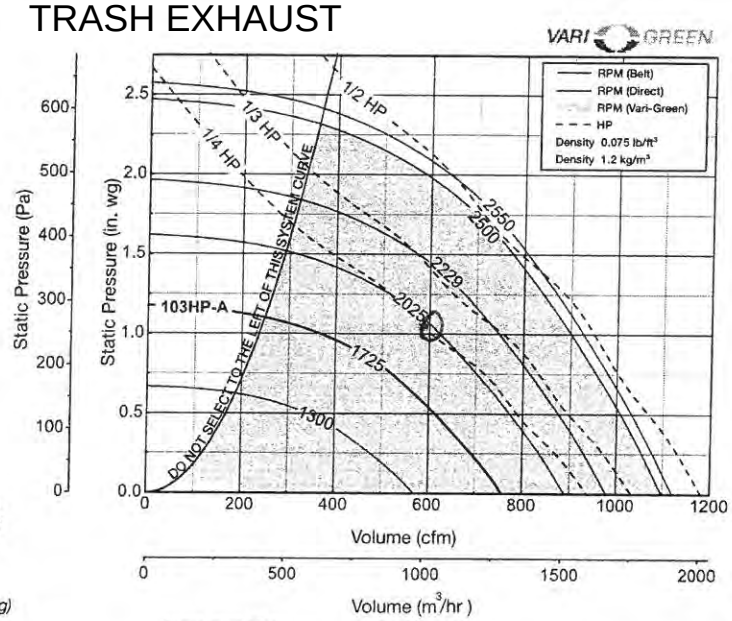

Damper Size = 12 x 12 *(305 x 305)*
Roof Opening = 14½ x 14½ *(368 x 368)*
Shroud Thickness = 0.051 *(1.3)*
Motor Cover Thickness = 0.040 *(1.0)*
Curb Cap Thickness = 0.064 *(1.6)*
^Approximate Unit Weight G/GB = 58/63 lbs. *(26/29 kg)*

100LBS EA

All dimensions in inches *(millimeters)*. *May be greater depending on motor. ^Weight shown is largest cataloged Open Drip-Proof motor.

Direct Drive RPM

A-1725 RPM	VG-2550 RPM

Motor HP Belt	Motor HP Direct	Fan RPM		Static Pressure in Inches wg 0	0.25	0.5	0.75	1	1.25	1.5	1.75	2	2.25
101HP	103HP												
1/4	VG-1/2 (VARI GREEN)	1300	CFM	571	477	342							
			BHP	0.06	0.06	0.07							
			Sones	6.6	5.7	5.3							
		1445	CFM	635	553	449	243						
			BHP	0.08	0.09	0.09	0.08						
			Sones	8.4	7.5	7	6.3						
		1590	CFM	699	626	537	417						
			BHP	0.10	0.11	0.12	0.12						
			Sones	10.4	9.5	9.1	8.3						
	A-1/4	1725	CFM	758	692	613	521	364					
			BHP	0.13	0.14	0.15	0.16	0.15					
			Sones	11.4	10.7	10.6	10.1	10					
		1880	CFM	826	767	697	618	518	337				
			BHP	0.17	0.18	0.19	0.20	0.20	0.18				
			Sones	12.7	12.2	11.9	12	11.4	11.9				
		2025	CFM	890	836	772	702	622	515	313			
			BHP	0.21	0.23	0.24	0.24	0.26	0.25	0.22			
			Sones	14.2	13.6	13.3	13.2	12.6	12	11.4			
1/3		2137	CFM	939	889	830	765	693	607	474			
			BHP	0.25	0.26	0.28	0.28	0.29	0.30	0.28			
			Sones	15.4	14.8	14.4	14.2	13.4	13.1	12.1			
		2229	CFM	979	931	875	814	748	674	574	406		
			BHP	0.28	0.30	0.31	0.32	0.33	0.35	0.33	0.31		
			Sones	15.8	15.4	14.8	14.5	14.1	13.7	13.2	12.0		
1/2		2336	CFM	1026	981	928	871	809	742	661	543	358	
			BHP	0.33	0.34	0.36	0.36	0.37	0.39	0.40	0.37	0.34	
			Sones	16.4	16	15.4	14.9	14.7	14	14.1	13.5	13.6	
		2500	CFM	1098	1056	1008	956	901	840	775	695	583	416
			BHP	0.40	0.42	0.43	0.45	0.45	0.46	0.48	0.48	0.46	0.42
			Sones	17.8	17.4	16.9	16.7	15.8	15.5	14.8	15.2	15.7	16.6
		2550	CFM	1120	1078	1032	982	928	869	807	735	639	497
			BHP	0.43	0.44	0.46	0.47	0.47	0.49	0.51	0.52	0.50	0.47
			Sones	18.2	17.9	17.4	17.2	16.3	16.1	15.1	15.6	16.2	17.2

MAXIMUM BHP AT A GIVEN RPM = $(RPM/3165)^3$
MAXIMUM RPM = 2550
TIP SPEED (ft/min) = RPM x 2.978
MAXIMUM MOTOR FRAME SIZE = 56

Performance certified is for installation type A: Free inlet, Free outlet. Power rating (BHP) does not include transmission losses. Performance ratings include the effects of a birdscreen. The sound ratings shown are loudness values in hemispherical sones at 5 ft. (1.5 m) in a hemispherical free field calculated per AMCA Standard 301. Values shown are for installation type A: free inlet hemispherical sone levels.

SWB-116 - Belt Drive
Series 100

GREENHECK
Building Value in Air.

FUTURE DISHWASHER

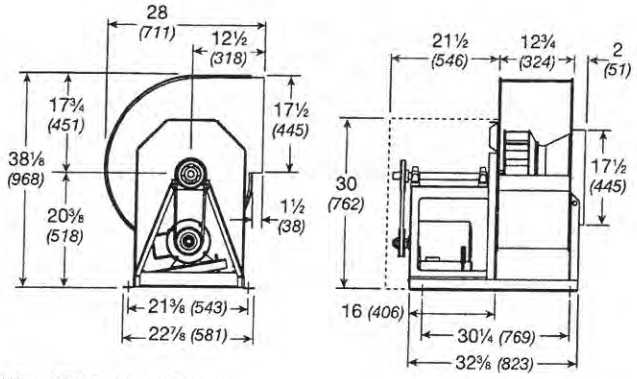

Wheel Diameter = 17 *(432)*
Shaft Diameter = 1 *(25)*
Outlet Area = 1.52 ft^2 *(0.14 m^2)*
^Approximate Unit Weight = 241 lb. *(109 kg)* ← 250 LBS EA

All dimensions in inches *(millimeters)*
For additional discharge positions see page 15
^Weight shown is largest cataloged Open Drip Proof motor

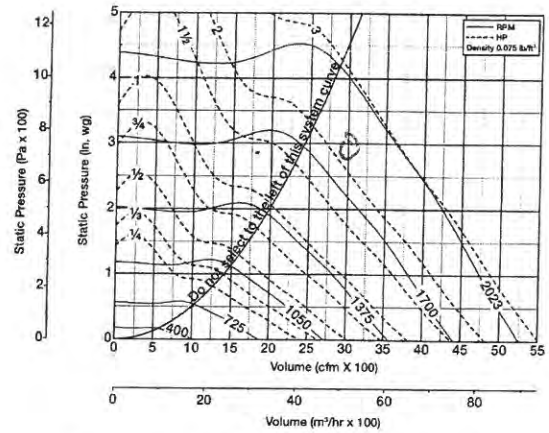

Maximum BHP at a given RPM = (RPM/1403)^3
(Maximum KW at a given RPM = (RPM/1547)^3)
Maximum RPM = 2023
Tip Speed (ft/min.) = RPM x 4.32
(Tip Speed (m/s) = RPM x 0.0219)
Maximum Motor Frame Size = 184T

SWB-116

CFM	OV		Static Pressure in Inches wg									
			0.5	0.75	1	1.25	1.5	2	2.5	2.75	3	3.5
1200	789	RPM	750									
		BHP	0.15									
		Sones	5.8									
1560	1026	RPM	846	943	1026							
		BHP	0.22	0.30	0.38							
		Sones	7.1	7.8	8.7							
1920	1263	RPM	949	1039	1120	1192	1259					
		BHP	0.31	0.40	0.50	0.60	0.71					
		Sones	8.8	9.6	10.7	11.5	12.0					
2280	1500	RPM	1061	1141	1216	1287	1352	1470	1576			
		BHP	0.42	0.53	0.65	0.76	0.88	1.12	1.38			
		Sones	10.9	11.8	12.5	12.9	13.3	14.4	16.4			
2640	1737	RPM	1182	1250	1320	1385	1448	1564	1666	1715	1762	1851
		BHP	0.57	0.69	0.82	0.96	1.09	1.36	1.64	1.79	1.93	2.23
		Sones	13.5	13.8	14.1	14.6	15.1	15.9	17.4	18.4	19.5	22
3000	1974	RPM	1306	1369	1429	1490	1548	1659	1761	1808	1853	1940
		BHP	0.76	0.89	1.03	1.18	1.34	1.64	1.95	2.11	2.26	2.59
		Sones	15.4	15.8	16.1	16.6	17.1	18.6	19.9	21	21	22
3360	2211	RPM	1432	1491	1545	1599	1654	1758	1857	1903	1948	
		BHP	0.99	1.14	1.29	1.45	1.62	1.96	2.30	2.47	2.64	
		Sones	17.6	18.0	18.4	18.9	19.6	21	23	23	23	
3720	2447	RPM	1560	1615	1667	1716	1764	1863	1955	2001		
		BHP	1.27	1.43	1.60	1.76	1.94	2.32	2.70	2.89		
		Sones	20	21	21	22	23	24	25	26		
4080	2684	RPM	1690	1742	1790	1837	1881	1971				
		BHP	1.60	1.78	1.96	2.14	2.32	2.72				
		Sones	23	24	25	25	26	27				
4440	2921	RPM	1821	1869	1916	1960	2002					
		BHP	1.99	2.18	2.38	2.58	2.77					
		Sones	27	28	28	29	30					
4800	3158	RPM	1953	1999								
		BHP	2.44	2.65								
		Sones	32	32								

Performance certified is for installation Type B - Free inlet, Ducted outlet. Power rating (Bhp) does not include transmission losses. Performance ratings do not include the effects of appurtenances (accessories). The AMCA Certified Ratings Seal applies to air performance only.

SWB-218 - Belt Drive
Series 200

GREENHECK
Building Value in Air.

FUTURE GREASE EXHAUST

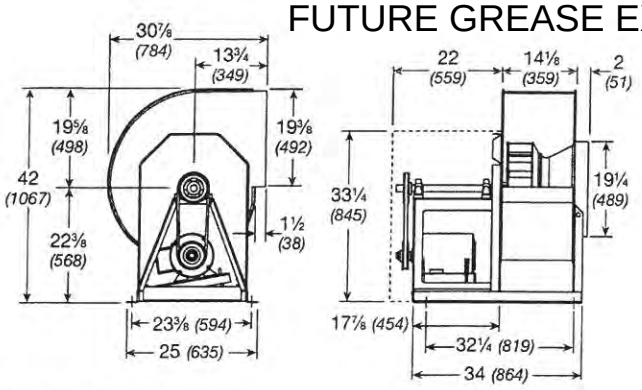

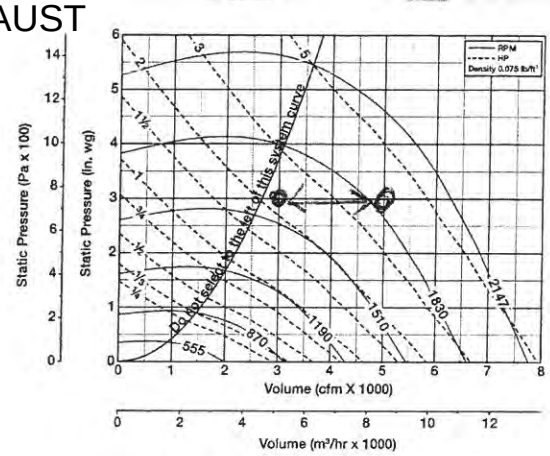

Wheel Diameter = 18⅝ *(473)*
Shaft Diameter = 1¼ *(32)*
Outlet Area = 1.87 ft² *(0.17 m²)*
^Approximate Unit Weight = 324 lb. *(147 kg)* ← 352LBS

All dimensions in inches *(millimeters)*
For additional discharge positions see page 15
^Weight shown is largest cataloged Open Drip Proof motor

Maximum BHP at a given RPM = $(RPM/1196)^3$
(Maximum KW at a given RPM = $(RPM/1319)^3$)
Maximum RPM = 2147
Tip Speed (ft/min.) = RPM x 4.78
(Tip Speed (m/s) = RPM x 0.0243)
Maximum Motor Frame Size = 213T

SWB-218

CFM	OV		Static Pressure in Inches wg									
			0.5	1	1.5	2	2.5	3	3.5	4	4.5	5
2000	1070	RPM	762	963	1136							
		BHP	0.26	0.49	0.75							
		Sones	10.1	11.3	13.4							
2500	1337	RPM	862	1023	1185	1330	1459					
		BHP	0.37	0.62	0.92	1.24	1.58					
		Sones	10.1	11.6	13.0	15.2	17.9					
3000	1604	RPM	974	1110	1245	1380	1507	1623	1730			
		BHP	0.52	0.80	1.12	1.47	1.85	2.24	2.65			
		Sones	11.5	12.6	13.9	15.5	18.3	21	24			
3500	1872	RPM	1092	1211	1327	1443	1557	1672	1779	1878	1971	2060
		BHP	0.72	1.03	1.36	1.74	2.15	2.58	3.02	3.48	3.95	4.43
		Sones	13.6	14.2	15.2	16.8	19.1	22	25	27	29	31
4000	2139	RPM	1218	1322	1423	1525	1626	1727	1828	1927	2020	2108
		BHP	0.97	1.32	1.68	2.07	2.51	2.95	3.43	3.93	4.44	4.96
		Sones	15.7	16.4	17.3	18.7	21	23	25	27	29	32
4500	2406	RPM	1346	1438	1530	1619	1709	1800	1890	1979	2069	
		BHP	1.28	1.66	2.07	2.48	2.92	3.41	3.90	4.42	4.96	
		Sones	18.2	18.8	19.6	21	23	24	26	28	30	
5000	2764	RPM	1475	1557	1643	1723	1804	1885	1967	2048		
		BHP	1.66	2.08	2.52	2.97	3.43	3.91	4.45	5.00		
		Sones	21	21	22	24	25	26	28	29		
5500	2941	RPM	1605	1683	1758	1834	1907	1981	2055			
		BHP	2.10	2.58	3.04	3.54	4.03	4.54	5.07			
		Sones	24	24	25	26	27	28	30			
6000	3209	RPM	1737	1810	1877	1949	2017	2084				
		BHP	2.63	3.15	3.65	4.18	4.72	5.25				
		Sones	27	28	28	29	30	31				
6500	3476	RPM	1869	1938	2002	2065	2131					
		BHP	3.26	3.81	4.37	4.91	5.49					
		Sones	31	31	31	32	33					
7000	3743	RPM	2003	2067	2128							
		BHP	3.98	4.57	5.18							
		Sones	34	35	35							

Performance certified is for installation Type B - Free inlet, Ducted outlet. Power rating (Bhp) does not include transmission losses. Performance ratings do not include the effects of appurtenances (accessories). The AMCA Certified Ratings Seal applies to air performance only.

Typical Installations

GREENHECK
Building Value in Air.

FUTURE KITCHEN EXHAUST

General Clean Air or Fume Hood (Non-Grease)

The SFD, SFB, SWD and SWB are designed for applications ranging from clean air to contaminated air. Typical installations are shown below. Installations must include a means for inspecting, cleaning and servicing the exhaust fan.

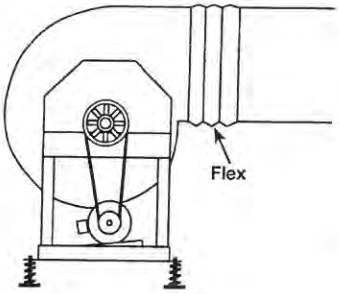

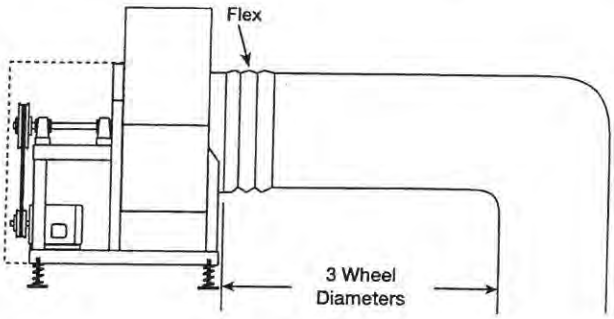

UL 762 KITCHEN EXHAUST

SWB Commercial Kitchen (Grease)

Greenheck's SWB Series 200 and 300 are designed to meet restaurant and foodservice applications. These fans are UL and cUL Listed for grease removal and have been tested under elevated temperature conditions.

Due to high temperatures and grease-laden airstreams in commercial kitchen ventilation, system designers must be aware of governing codes and guidelines. The National Fire Protection Association (NFPA) is the primary source used by many local codes for commercial kitchen ventilation systems. Local code authorities should be consulted before proceeding with any kitchen ventilation project.

Installation must include a means for inspecting, cleaning and servicing the exhaust fan.

Fans selected for grease removal must include a weatherhood, access door and 1-inch *(25 mm)* drain connection. For grease applications where the fan is mounted indoors, the welded scroll option must be selected. An outlet guard is strongly recommended when the fan discharge is accessible. When an outlet guard is not ordered with the fan, it must be provided by the installer. An upblast discharge is recommended. No dampers are to be used in the system.

The fan discharge must be a minimum of 40 inches *(1016 mm)* above the roof line and the exhaust duct must be fully welded to a minimum distance of 18 inches *(457 mm)* above the roof surface.

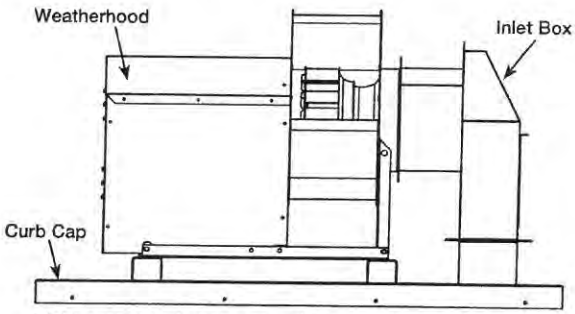

Inlet box and curb cap are used when space is limited and a 90° turn is required less than 3 wheel diameters from the inlet.

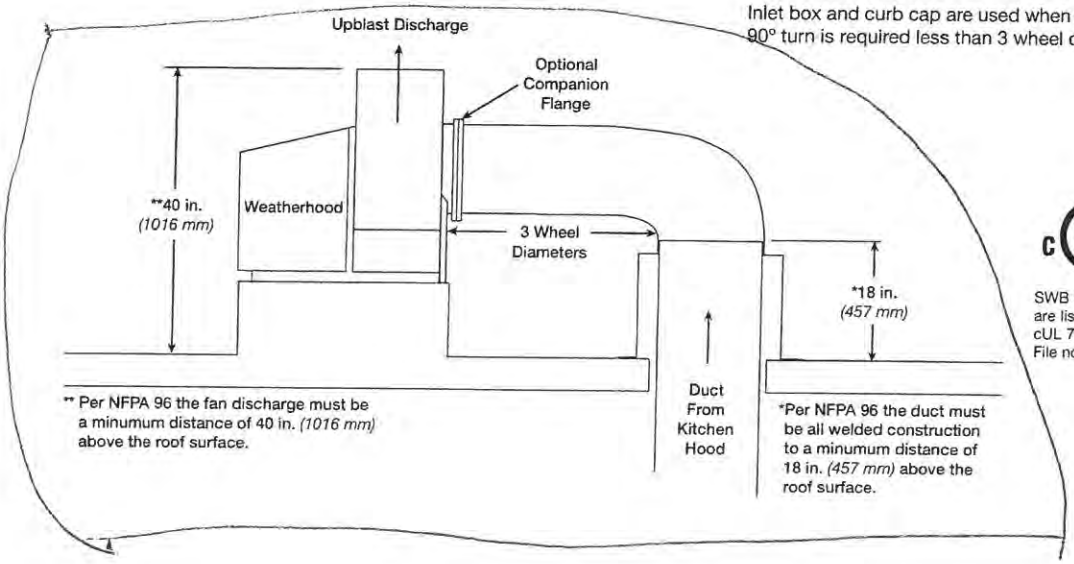

c UL US LISTED

SWB Series 200 and 300 models are listed for grease removal (UL/cUL 762).
File no. MH11745

Mounting Options

GREENHECK
Building Value in Air.

Vibration Isolators

Base-mounted neoprene or spring isolators are available to lessen mechanical vibration and assure quiet operation. Free-standing, restrained and housed spring isolators are also available. Isolators are sized to match the weight of each fan.

Free-Standing Open Spring Mounts -

Type 3, 1-inch Deflection

Free-standing spring isolators are unhoused laterally stable steel springs. They provide a minimum horizontal stiffness of 0.8 times the rated vertical stiffness and provide an additional 50% overload capacity. These isolators are equipped with a top-mounted adjusting bolt and an acoustical non-skid base. Springs are color coded to indicate load capacity.

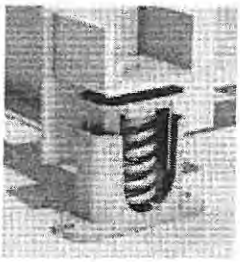

Housed Spring Mounts

Type 4B, 1-inch Deflection

Housed spring isolators consist of steel springs assembled into a telescoping housing with a top-mounted adjusting bolt and an acoustical non-skid base. Housed spring isolators include resilient inserts to prevent metal-to-metal contact and provide snubbing for side loads. Springs provide an additional 50% overload capacity and are color coded to indicate load capacity.

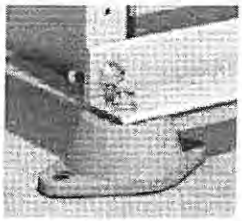

Rubber Mounts -

Type 2, ¼-inch and ½-inch Deflection

Neoprene mountings consist of a steel top plate and base plate completely embedded in colored (oil-resistant) neoprene for easy identification of capacity. Neoprene mountings are furnished with a tapped hole in the center. This enables the equipment to be bolted securely to the rubber mount.

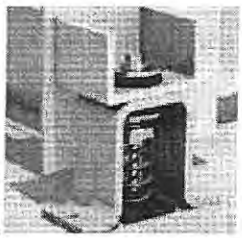

Restrained Spring Mounts -

Type 4A, 1-inch Deflection

Restrained spring isolators consist of laterally stable, free-standing springs assembled into a steel housing. These assemblies are designed for vertical and horizontal motion restraint. Restrained spring isolators can be used for blocking during equipment installation and are provided with leveling bolts. Springs provide 50% overload capacity and are color coded or identified to indicate load capacity. Restrained spring mounts are recommended for equipment subject to wind loading or large torquing forces.

Direct Mount - Type A

No base required. Isolators are attached directly to equipment. Direct isolation can be used if equipment is unitary and rigid without the use of additional support. If there is any doubt whether or not equipment can be supported directly on isolators, use rails, bases or consult the factory.

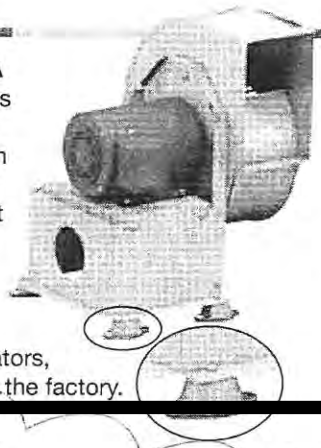

Mounting Rails

with Isolators

Isolation mounting rails are available with either rubber mount, free-standing open or restrained spring isolators. The isolators are mounted between aluminum rails that run the length of the fan base. Isolation rails provide easy installation on isolated systems, and are ideal for applications where there is a large overhung load. Mounting rails are available for fans up to size 36.

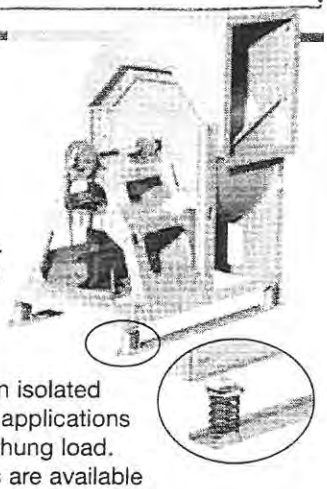

Equipment Supports

Models GESS and GESR equipment supports are available for roof mounting of utility fans up to size 36. Equipment supports are available in a number of lengths, widths, heights, and can also be built for a pitched roof.