City of Dublin

15-021.0-CIP

Proposal
And
Contract Documents
for

2015 Shared –Use Path Maintenance

15-021.0-CIP

City of Dublin

BID SUBMITTAL AND CONTRACT DOCUMENTS FOR THE

CITY OF DUBLIN

2015 SHARED - USE PATH MAINTENANCE

TABLE OF CONTENTS

I. BIDDING REQUIREMENTS 1

A. INVITATION FOR BIDS 2
B. INSTRUCTIONS TO BIDDERS 3
C. REQUEST FOR INFORMATION (PRE-BID) 16
D. BID COVERSHEET 17
E. PREVAILING WAGE RATES DISK 19

II. BIDDING FORMS 20

A. PROPOSAL 21
B. BID SCHEDULE ..... 26-1 to 26-3
C. COMBINED BID/PERFORMANCE/PAYMENT BOND 27
D. ALTERNATE BID SECURITY FORM 30
F. AFFIDAVIT OF AUTHORITY 31
G. COMBINED DELINQUENT PERSONAL PROPERTY TAX & NONCOLLUSION AFFIDAVIT 32
H. W-9 FORM 33
I. LIST OF SUBCONTRACTORS 34
J. CONTRACTOR QUALIFICATION STATEMENT 36

III. ADDITIONAL CONTRACT DOCUMENTS 52

A. CITY/CONTRACTOR AGREEMENT 53
B. CITY OF DUBLIN GENERAL CONDITIONS DIVISION 100 63
C. SUPPLEMENTAL GENERAL CONDITIONS 64
D. SUPPLEMENTAL SPECIFICATIONS 65
E. GEOTECHNICAL SPECIFICATIONS 66
F. STANDARD DRAWINGS 67
G. SCOPE OF WORK 68

IV. OWNER COMPLETED FORMS 69

A. OWNER EXECUTION CHECKLIST 70
B. NOTICE OF AWARD TO BIDDER 71
C. NOTICE OF AWARD TO SURETY AND SURETY'S AGENT 72
D. NOTICE TO PROCEED 73
E. NOTICE OF COMMENCEMENT OF PUBLIC IMPROVEMENT (O.R.C. §1311.252).....74
F. PREVAILING WAGE BID TABULATION SHEET 75

V. ADDITIONAL PROJECT FORMS 76

A. PAYROLL INFORMATION 77
B. FINAL AFFIDAVIT OF COMPLIANCE WITH PREVAILING WAGES 79
C. CONTRACTOR'S LIEN WAIVER AND RELEASE AGREEMENT....80

VI. PLANS/DRAWINGS 81

I. BIDDING REQUIREMENTS

A. INVITATION FOR BIDS

The CITY OF DUBLIN, Ohio will receive sealed bids for the materials and labor necessary for the construction of the 2015 SHARED - USE PATH MAINTENANCE. Bids shall be received by CITY OF DUBLIN at 5800 Shier-Rings Road, Dublin, Ohio 43016 until 2:00 P.M. local time on August 12, 2015, at which time all bids will be opened and read aloud.

The CITY OF DUBLIN may choose to not award the bid—and bidders shall hold bids open—until sixty days after the bid opening. The work for which bids are invited consists of: concrete curbing, flatwork and curb ramps, asphalt bike path resurfacing and reconstruction, storm sewer, grading The cost estimate for the Project is $ 679,000.00.

Copies of the Contract Documents are on file at 6555 Shier-Rings Road, Dublin, Ohio 43016, where they are available for inspection by prospective bidders. Paper copies of the Contract Documents are available for a NONREFUNDABLE charge of $75.00 during business hours at the same address. Please make any check payable to the CITY OF DUBLIN.

Each bidder is required to furnish with its proposal a Bid Guaranty in accordance with Section 153.54 of the Ohio Revised Code. Bid security furnished in Bond form shall be issued by a surety company or corporation licensed in the State of Ohio to provide said surety.

Each proposal must contain the full name of the party or parties submitting the proposal and all persons interested therein. Each bidder must submit evidence of its experience on projects of similar size and complexity. The owner intends and requires that this project be completed by November 20, 2015.

All contractors and subcontractors involved with the project will to the extent practicable use Ohio products, materials, services and labor in the implementation of their project. Payment of Prevailing Wages is required for this Project.

The CITY OF DUBLIN reserves the right to accept or reject any or all bids, to waive any informalities or irregularities in the bidding process and to enter into a contract with the bidder whom, in its opinion, offers the lowest and best bid.

Each bidder must ensure that all employees and applicants for employment are not discriminated against based on race, color, religion, sex, or national origin.

By order of the Council of the CITY OF DUBLIN, OHIO. Ordinance number N/A.

Publish dates: July 29, 2015
August 5, 2015

B. INSTRUCTIONS TO BIDDERS

1. PRELIMINARY MATTERS

   a. The Project owner is the CITY OF DUBLIN, OHIO. The Owner's Representative is Paul A. Hammersmith P.E., Director of Engineering / City Engineer. You may direct questions or request for additional information to **Darren Lee, P.E. at Telephone: 614-410-4625; Email: dlee@dublin.oh.us.**

   b. In connection with the Legal Notice, the CITY OF DUBLIN (hereinafter called the "City"), issues this Request for Bids for all labor, material, and services necessary for constructing the 2015 SHARED - USE PATH MAINTENANCE(the "Project"), as more fully described in the Contract Documents.

   c. Definitions. The word uses here shall have the following meanings:

      i. "City" or "Owner" shall mean the CITY OF DUBLIN, OHIO.

      ii. "Bidder" or "Contractor" shall all mean an entity or person that submits a bid for the Project and ultimately the entity or person awarded the contract as applicable.

      iii. "Contract Documents" shall mean the documents included with this bid solicitation and listed as Contract Documents in the City/Contractor Agreement.

      iv. "O.R.C." shall mean the OHIO REVISED CODE.

   d. The Project consists of the following contract(s) for the work on the Project:

      i. General Contract

   e. Estimate of Cost [O.R.C. 153.12(A)].

      i. The total estimated construction cost for the base bid Work for the Project for which the City is soliciting bids at this time is $ 679,000.00.

2. CONTRACTOR QUALIFICATIONS, REGISTERED CONTRACTORS, INCOME TAX, PERMITTING

   a. A Bidder may be a person, private entity, or any combination of such entities supported by a letter of intent to enter into an agreement or under an existing agreement in association in the form of a joint venture or other consortium. In the case of a joint venture or other consortium:

      i. All members shall be jointly and severally liable for the execution of the Contract, and

      ii. The association shall nominate a representative who shall have the authority to conduct all business for and on behalf of any and all the members of the joint venture or the consortium during the bidding process and, in the event the joint venture or consortium is awarded the Contract, during Contract execution.

   b. Threshold Qualifications. Every Contractor, before entering a contract with the City, must demonstrate the following:

i. Registered Contractors. Any person or company (including subcontractors) intending to do work under these Contract Documents shall be required to meet the CITY OF DUBLIN laws for Contractor Registration, if any, contained in the Codified Ordinances of the CITY OF DUBLIN as applicable to the particular classification of work to be performed.

ii. Licensed Contractors. Bidders and subcontractors for work requiring licenses under the O.R.C. shall submit evidence of such licensing in accordance with O.R.C. Chapter 4740.

iii. Foreign Corporations. Business entities formed outside of the state of Ohio shall present proof of registry with the Ohio Secretary of State and demonstrate the existence of an Ohio statutory agent.

c. Income Taxes. All persons or entities performing work under these Contract Documents shall comply with the requirements set forth in the Codified Ordinances of the CITY OF DUBLIN.

d. Permits and Regulations - Unless otherwise previously or subsequently specified, the Contractor shall procure and pay for all permits, licenses, inspections and approvals necessary for the execution of his contract. The City will obtain the required building permit for permanent structure.

i. The Contractor shall comply with all laws, ordinances, rules, orders and regulations relating to the performance of the work required to complete the Project.

ii. The Contractor's attention is directed to the "Safety and Health Regulations for Construction" of the Occupational Safety and Health Administration, U.S. Department of Labor and to its responsibilities thereunder.

3. GENERAL INSTRUCTIONS

a. City expects the Bidder to examine all instructions, forms, terms, and specifications in the Request for Bids. Each Bidder is solely responsible for conducting its own due diligence and investigation in support of the preparation of Bids, negotiation of agreements, and the subsequent delivery of all services it will provide. Bidder’s failure to furnish all information or documentation required by the Bidding Documents may result in the City rejecting the Bid.

b. Public Information. The City considers all information, documentation and other materials requested to be submitted in response to this solicitation to be a non-confidential and/or non-proprietary nature and therefore subject to public disclosure under the Ohio Public Records Laws except as specifically exempted by those laws. [O.R.C. Chapter 149].

c. Bidder should carefully read the information contained herein. It is the Bidder’s responsibility to submit a complete response to all requirements and questions. Any information submitted by Bidders shall become the property of the City and submitted at the Bidder’s sole expense. The City shall not pay any stipend for any submissions related

to the bidding process. The City will not provide compensation to Bidders for any expenses incurred for Bid preparation or for any presentations made.

d. The City may disqualify bids that are qualified with conditional clauses, or alterations, or items not called for in the bid documents, or irregularities and deviations from the requirements of the Contract Documents.

e. The City makes no guarantee that an award will be made because of this bid, and reserves the right to accept or reject any or all bids, waive any formalities or minor technical inconsistencies, or delete any item/requirements from this bid or resulting contract when deemed to be in the City's best interest.

4. INTERPRETATION

a. If a Bidder contemplating submitting a Bid for the proposed Project is in doubt as to the true meaning of any part of the Contract Documents, **it may submit a written request for an interpretation thereof to Darren Lee, P.E., in writing on the form included with the Contract Documents. Inquiries shall be faxed to 614-410-4699 to the attention of Darren Lee, P.E. or e-mailed to dlee@dublin.oh.us**. The City will make any interpretation of the proposed documents by Addendum only, duly signed by the City, and a copy of such Addendum will be mailed or delivered to each Bidder receiving a set of Contract Documents and each plan room where the City maintains the Contract Documents. The City will not be responsible for any other explanation or interpretation of the proposed documents.

b. In interpreting the Contract Documents, the Bidder shall interpret words describing materials that have a well-known technical or trade meaning, unless otherwise specifically defined in the Contract Documents, in accordance with the well-known meaning recognized by the trade.

5. DOCUMENTS TO SUBMIT WITH BID

a. The Bidder shall submit the following completed forms with its response to this Request for Bids:

i. Bid Form

ii. Bid Guaranty and Contract Bond

iii. Affidavit of Authority (if applicable)

iv. Personal Property Tax Affidavit

v. Bidder's Qualification Statement

vi. Insurance Certificate

vii. Noncollusion affidavit

viii. State of Ohio Bureau of Workers' Compensation Certificate

ix. Proposed Supervisory Personnel List

x. Proposed Subcontractor List

xi. Bidder's and Subcontractors' Certificate(s) of licensure, if applicable

b. In addition to the foregoing requirements, Bids submitted by a joint venture or other consortium shall include a copy of the joint venture/consortium agreement entered into by all members. Alternatively, a binding letter of intent or similar irrevocable instrument to execute a joint venture/consortium agreement in the event of a successful Bid shall be signed by all members and submitted with the Bid, together with a copy of the proposed joint venture/consortium agreement.

c. Each Bidder shall submit the following number of copies of its Bid to the City: 1 copy printed one sided and one additional copy in electronic PDF form. The PDF form must exactly match the hard copy and must be provided within 24 hours after the Bid opening. The Bid Form shall be signed with the name typed or printed below the signature. A Bid shall not be submitted by facsimile transmission. A Bidder shall sign its Bid in the form required under Ohio law to bind the Bidder's particular type of business entity to a contract.

d. Each Bid shall be enclosed and delivered in a sealed opaque envelope with the Bidder's name and the title of the Project printed in the upper left hand corner and addressed as follows: **ATTN: Paul A. Hammersmith P.E., Director of Engineering / City Engineer, 5800 Shier-Rings Road, Dublin, Ohio 43016.** The Bidder shall be responsible for delivering its Bid to this office and address for the Bid opening before the deadline set forth in the Legal Notice—as extended by any addenda. The City will not open Bids that arrive after the deadline regardless of how the Bidder delivers the Bid.

e. After the City opens the Bids, it may require the Bidders to make available additional financial information, including, but not limited to, financial statements from the previous three years for review of the City. Such financial statements shall be audited financial statements to the extent available or, if not available, at least be reviewed financial statements. At the City's discretion, it may obtain a copy of such financial information. To the extent the City maintains copies of such documents, the City shall keep additional financial information it receives pursuant to a request under this paragraph confidential to the extent possible, except under proper order of a court. The additional financial information should not be a public record under section 149.43 of the Revised Code. (*See* O.R.C. 9.312).

6. CLARIFICATION OF BIDS

a. To assist in the examination, evaluation, and comparison of the Bids and the qualifications of the Bidders, the City may ask any Bidder for a clarification of its Bid. Any clarification submitted by a Bidder that is not in response to a request by the City shall not be considered. The City's request for clarification and the response shall be in writing. No change in the prices or substance of the Bid shall be sought, offered, or permitted, except to confirm the correction of arithmetic errors discovered by the City in the evaluation of the Bids.

7. BONDS

   a. Each bidder shall submit one of the statutorily required forms of bid security as set forth in O.R.C. Section 153.54 on the form included with the Contract Documents. There are two ways to meet these requirements:

      i. OPTION #1: Submit the Combined Bid/Performance/Payment Bond on the form included with the Contract Documents along with the Bid; or,

      ii. OPTION #2: Submit a certified check, cashier's check, or letter of credit pursuant to Chapter 1305 of the Revised Code, conditioned to provide that if the bid is accepted, the bidder, after the awarding or the recommendation for the award of the contract, whichever the contracting authority designates, will enter into a proper contract in accordance with the bid, plans, details, specifications, and bills of material. Any letter of credit shall be revocable only at the option of the City. The amount of the certified check, cashier's check, or letter of credit shall be equal to ten per cent of the bid. Any of the foregoing instruments shall be submitted with the CITY OF DUBLIN listed as the payee or beneficiary. If the Bidder chooses option ii and is awarded the Contract, the Bidder shall then submit a Bond using the form included with the Contract Documents.

   b. With any Bond required here, the Bidder shall submit or ensure:

      i. *Ohio Department of Insurance Certificate*. Proof that the bond is issued by a surety company ("Surety") authorized by the Ohio Department of Insurance to transact business in the State of Ohio and acceptable to the City in the form of a certificate.

      ii. *A Financial Statement*. Proof that the bond is issued by a Surety capable of demonstrating a record of competent underwriting, efficient management, adequate reserves, and sound investments. These criteria will be deemed to be met if the Surety currently has an A.M. Best Company Policyholders rating of "A-" better and has or exceeds the Best Financial Size Category of Class VI. Other Sureties may be acceptable to the City, in its sole discretion.

      iii. *Proper signatures, credentials, and Power of Attorney*. The bond shall be signed by an authorized agent of an acceptable Surety and by the Bidder; and, include credentials showing the Power of Attorney of the agent.

      iv. The name, address, and telephone and fax numbers of the Surety and the Surety's Agent should be typed or printed on each bond.

8. EXECUTION OF CONTRACT

   a. Within 10 days after award of the Contract, the successful Bidder shall execute and deliver to the City an original of the City/Contractor Agreement, based upon the City's form. Such contract shall include the terms required by Ohio law and documents required by the Instructions to Bidders and Contract Documents for the Project. The successful Bidder shall have no property interest or rights under the City/Contractor Agreement until the Agreement is properly executed by the City.

9. STATE SALES AND USE TAXES

   a. The City is a political subdivision of the State of Ohio and is exempt from taxation under the Ohio Sales Tax and Use Tax Laws. Building materials that the successful Bidder purchases for incorporation into the Project will be exempt from state sales and use taxes if the successful Bidder provides a properly completed Ohio Department of Taxation Demolition Contract Exemption Certificate to the vendors or suppliers when acquiring the materials. The City will execute properly completed certificates on request.

10. COMPLETION DATE

   a. Completion Date. Each successful Bidder shall have its Work on the Project Complete as follows: November 20, 2015**.** The Contract Time shall run from the date of the Notice to Proceed or if there is no Notice to Proceed from the Effective Date of the City/Contractor Agreement.

11. MODIFICATION/WITHDRAWAL OF BIDS

   a. Modification. A Bidder may modify its Bid by written communication to the City addressed to the City's Representative at any time before the scheduled closing time for receipt of Bids, provided such written communication is received by City's Representative before the Bid deadline. The written communication shall not reveal the Bid price, but should provide the addition or subtraction or other modification so that the final prices or terms will not be known to the City until the sealed Bid is opened. If the Bidder's written instructions with the change in Bid reveal the Bid amount in any way before the Bid opening, the Bid may be rejected as non-responsive.

   b. Withdrawal. Bids may be withdrawn with permission of the City or in strict accordance with O.R.C. Section 9.31 which generally commands that Bidders may withdraw their bids from consideration if the price of the bid was substantially lower than the other bids, providing the bid was submitted in good faith, and the reason for the price bid being substantially lower was a clerical mistake as opposed to a judgment mistake, and was actually due to an unintentional and substantial arithmetic error or an unintentional omission of a substantial quantity of work, labor, or material made directly in the compilation of the bid. Notice of a claim of right to withdraw such bid must be made in writing filed with the City within two business days after the conclusion of the bid opening procedure.

12. PREVAILING WAGES

   a. This Project is horizontal construction with an estimated cost of $ 679,000.00, and the **Bidder is required to comply with all applicable Ohio Prevailing Wage requirements and labor laws for this Project.**

   b. If Prevailing Wage applies to this Project, the determination of the prevailing rates of wages of mechanics and laborers in accordance with section 4115.05 of the Revised Code for the class of work called for by the Project, in the locality where the work is to be performed, shall be attached to and made part of the Contract Documents.

c. If Prevailing Wage applies to this Project, the Contractor must pay at least the wage rates subsequently listed in the Wage determinations. The Contractor must submit properly executed copies of the Contractor's and subcontractor's payrolls to the City's Prevailing Wage Coordinator in accordance with the requirements of Section 4115.071 of the O.R.C.. Payroll records shall be kept current as failure to do so will delay the Owner's approval for payment of any pending estimates.

13. ALTERNATES

a. The City may request bids on alternates. If the City requests bids on alternates, the Bidder should include the cost of the alternates requested on its Bid Form.

b. At the time of awarding the contract, the City will select or reject alternates as it determines is in its best interest. A Bidder's failure to include in its Bid Form the cost of an alternate selected by the City and applicable to the Bidder's work may render the bid non-responsive and be grounds for the rejection of the bid. Otherwise, the failure to include the cost of an alternate will not be deemed material.

c. The Bidder acknowledges that although there is an estimate for the cost of the Project, the market conditions may and frequently do result in the estimate being different from the sum of the bids received, either higher or lower. The Bidder understands that the City may include alternates, which may include deduct alternates as well as add alternates, to give it flexibility to build the Project with the funds available. The Bidder further understands and acknowledges that use of add and deduct alternates is a long held customary practice in the construction industry in the State of Ohio. The Bidder also acknowledges that the City will not make a decision about the alternates on which to base the award of contracts until the bids are received, and the City can compare its available funds with the base bids and the cost or savings from selecting different alternates. The Bidder understands that the award to the Bidder submitting the lowest and best bid will be based on the lowest and best base bid plus selected alternates, and may result in an award to a Bidder other than the Bidder that submitted the lowest base bid. The bidder also acknowledges that its, and other bidders', bids may become responsive or non-responsive based on whether the bidders bid and are qualified for all base work and alternates; and, the City's selection of alternates. The City will evaluate bids to determine the lowest and best bid after it selects the alternates.

d. If, during the progress of the Work, the City desires to reinstate any alternate not included in the Contract, the City reserves the right to reinstate the alternate at the price bid by the Contractor if such action is taken in sufficient time so as not to delay the progress of the work or cause the Contractor additional expense.

14. UNIT PRICES

a. Where unit prices are requested in the Bid Form, the Bidder should quote a unit price. Unless otherwise expressly provided in the Bid Documents, such unit prices shall include all labor, materials, and services necessary for the timely and proper installation of the item for which the unit prices are requested. The unit prices quoted in the bid shall be the basis for any Change Orders entered into under the City/Contractor Agreement,

unless the Design Professional determines that the use of such unit prices will cause substantial inequity to either the Contractor or the City.

b. The estimated quantities shown herein are approximate only and the City assumes no responsibility for the accuracy of the estimates. Bidders are cautioned to make their own investigations and determinations of the conditions under which the work will be performed and to base their bids accordingly.

15. ADDENDA

a. The City reserves the right to issue Addenda changing, altering, or supplementing the Contract Documents before the time set for receiving bids. The City will issue the Addenda to clarify bidders' questions and/or to change, alter, or supplement the Contract Documents.

b. Any explanation, interpretation, correction, or modification of the Contract Documents will be issued in writing in the form of an Addendum, which shall be the only means considered binding. Any explanations, interpretations, or other representations made by any other means shall not be legally binding. All Addenda shall become a part of the Contract Documents.

c. Bidders shall submit written questions to the City in sufficient time in advance of the bid opening to allow sufficient time for the City to respond. All Addenda will be issued, except as hereafter provided, and mailed or otherwise furnished to persons who have obtained Contract Documents for the Project, before the published time for the opening of bids.

d. Copies of each Addendum will be sent only to the Bidders to whom Contract Documents have been issued and to Plan Rooms where copies of the Contract Documents are maintained. Receipt of Addenda shall be indicated by Bidders in the space provided on the Bid Form. Bidders are responsible for acquiring issued Addenda in time to incorporate them into their bid. Bidders should contact the City before the bid opening to verify the number of Addenda issued.

e. Each Bidder shall carefully read and review the Contract Documents and immediately bring to the attention of the City any error, omission, inconsistency, or ambiguity therein.

f. If a Bidder fails to indicate receipt of all Addenda through the last Addendum issued by the Design Professional on its Bid Form, the bid of such Bidder will be deemed to be responsive only if:

    i. The bid received clearly indicates that the Bidder received the Addendum, such as where the Addendum added another item to be bid upon and the Bidder submitted a bid on that item; or

    ii. The Addendum involves only a matter of form or is one that has either no effect or has merely a trivial or negligible effect on price, quantity, quality, or delivery of the item bid upon.

16. PREFERENCE FOR PUBLIC IMPROVEMENT CONTRACTS (As Selected)

a. [X] With respect to the award of this Contract, the City shall give preference to a contractor having its principal place of business in Ohio over a contractor having its

principal place of business in a state that provides a preference in favor of contractors of that state for the same type of work. Where a preference is provided by another state for contractors of that state, a contractor having its principal place of business in Ohio is to be granted by the City the same preference over them in the same manner and on the same basis and to the same extent as the preference is granted in letting contracts for the same type of work by the other state. If one party to a joint venture is a contractor having its principal place of business in Ohio, the joint venture shall be considered as having its principal place of business in Ohio.

b. [ ] With respect to the award of this Contract, the City shall not give preference to a contractor having its principal place of business in Ohio over other contractors.

17. METHOD OF AWARD

a. In evaluating Bids, the City may conduct such investigations as are deemed necessary to establish the qualifications and financial ability of the Bidder and its subcontractors and suppliers. The Bidder authorizes the City and its representatives to contact the owners, design professionals, and others having knowledge (collectively "Contacts") on projects on which the Bidder has worked and authorizes and requests such Contacts to provide the City with a candid evaluation of the Bidder's performance. By submitting its Bid, the Bidder agrees that if it or any person, directly or indirectly, on its behalf or for its benefit brings an action against any of such Contacts or the employees of any of them as a result of or related to such candid evaluation, the Bidder will indemnify and hold such Contacts and the employees of any of them from any claims whether or not proven that are part of or are related to such action and from all legal fees and expenses incurred by any of them arising out of or related to such legal action. This obligation is expressly intended for the benefit of such Contacts and the employees of each of them.

b. All Bids shall remain open for acceptance for 60 days following the day of the Bid opening, but the City may, in its sole discretion, release any Bid and return the Bid Guaranty before that date.

c. The City reserves the right to reject any, part of any, or all Bids and to waive any informalities and irregularities. The Bidder expressly acknowledges this right of the City to reject any or all Bids or to reject any incomplete or irregular Bid. The City will award a single contract for each of the Bid packages listed above, unless it determines to reject one or more Bid packages. Bidders must furnish all information requested. Failure to do so may result in disqualification of the Bid.

d. Determination of the Bidder Submitting the Lowest and Best Bid. Subject to the right of the City to reject any or all Bids, the City will award the Contract for the Work to the Bidder submitting the lowest and best Bid, taking into consideration accepted alternates.

    i. Buy Ohio/American and Ohio Contractor Bid Preference. If selected above, the City shall apply a domestic Ohio bid preference as outlined below.

        1. Bids will first be evaluated to determine that a bidder's offering is for a domestic source end product as defined in48 CFR Pt. 25.003. Information furnished by the Bidder in its Bid shall be relied upon in making this determination. Any Bidder's offering that does not offer a domestic

source end product shall be rejected, except where the City determines that certain articles, materials and supplies are not mined, produced, or manufactured in the United States in sufficient and reasonably available commercial quantities and of a satisfactory quality.

a. Following the determination as to domestic source end products, remaining bids and proposals shall be evaluated as set forth below, so as to give preference to Ohio bids or bidders who are located in a border state, provided that the border state imposes no greater restrictions than contained in this rule.

2. Buy Ohio Act compliance

a. Where the preliminary analysis of bids identifies the apparent low bid as an Ohio bid or a bid from a border state, the City shall proceed with its standard contract award practices and procedures as set forth in the Instructions to Bidders.

b. Where the preliminary analysis identifies the apparent low bid as one other than an Ohio bid or bid from a border state, the City shall consider the following factors:

i. Whether the goods or services can be procured in-state in sufficient and reasonably available quantities and of a satisfactory quality;

ii. Whether an Ohio bid has been submitted;

iii. Whether the lowest Ohio bid, if any, offers a price to the City deemed to be an excessive price (defined as a price that exceeds by more than five per cent the lowest non-Ohio bid submitted);

iv. Whether the lowest Ohio bid, if any, offers a disproportionately inferior product or service.

c. Where the City determines that selection of the lowest Ohio bid, if any, will not result in an excessive price or disproportionately inferior product or service, the City shall include that Bidder in its lowest and best analysis.

d. Where the City otherwise determines it is advantageous to propose the award of a contract to other than an Ohio bidder or bidder from a border state, the City shall include that Bidder in its lowest and best analysis.

ii. In addition to the forgoing, City may consider the following criteria in determining the lowest and best bidder; and, in its discretion, may consider and give such weight to these criteria as it deems appropriate:

1. Past Contract Performance

a. Whether Bidder has failed to perform a contract within the last five years from the date of Bid submission based on all information including fully settled disputes or litigation. A fully settled dispute or litigation is one that has been resolved in accordance with the dispute resolution mechanism under the respective contract, and where all appeal instances available to the Bidder have been exhausted.

b. Whether Bidder has failed to sign a contract after submitting a bid security in the past five years.

c. All pending litigation shall in total not represent more than ten percent (10%) of the Bidder's net worth and shall be treated as resolved against the Bidder.

d. Bidder's history of making claims against others or having claims made against it; and, if the Bidder's management operates or has operated another construction company, the work history of that company in determining whether the Bidder submitted the lowest and best Bid.

2. Financial Ability

a. The Bidder's financial ability to complete the Contract successfully and on time without resort to its Surety.

b. The City may request Bidder provide for its review audited financial statements, to the extent available, and if not available, reviewed financial statements including balance sheets, income statements, and cash flow statements, or other financial statements acceptable to the City, for the last three years to demonstrate the current soundness of the Bidder's financial position and its prospective long term profitability.

i. The Bidder's average coefficient of Current ratio (Current Assets/Current Liabilities) compared to 1. The greater, the better.

ii. The Bidder's average coefficient of Debt ratio (Total Debt/Total Assets) compared to 1. The lesser, the better.

3. Experience

a. Whether the Bidder has experience under contracts in the role required by this Contract for at least the last five years before the Bid submission deadline, and with activity in at least nine months each year.

b. Whether the Bidder has participated as in the role required by this Contract in at least two contracts within the last five years, each with a value of at least 85% of the stated estimate for this Project,

that have been successfully and substantially completed and that are similar to the proposed Works. Similarity shall be based on the physical size, complexity, methods, technology or other characteristics as described in the Contract Documents.

c. For the above or other contracts executed during the period stipulated in above, whether the Bidder has experience in the following key activities: **ODOT Pre-Qualification for horizonal work including concrete curbing, flatwork and curb ramps, asphalt bike path resurfacing and reconstruction, storm sewer, grading.**

d. Whether the Bidder has a record of consistent customer satisfaction and of consistent completion of projects, including projects that are comparable to or larger and more complex than the Project, on time and in accordance with the applicable Contract Documents.

e. The Bidder's prior experience on other projects with the CITY OF DUBLIN and with other public owners, including the Bidder's demonstrated ability to complete its work on these projects in accordance with the Contract Documents and on time, and will also consider its ability to work with the City as a willing, cooperative, and successful team member.

4. Whether the Bidder possesses or can obtain sufficient equipment and facilities to complete the Project.

5. The adequacy, in numbers and experience, of the Bidder's work force to complete the Contract successfully and on time.

6. The Bidder's compliance with federal, state, and local laws, rules, and regulations, including but not limited to the Occupational Safety and Health Act, Prevailing Wage laws, and Ethics laws.

7. The Bidder's participation in a drug-free workplace program acceptable to the City, and the Bidder's record for both resolved and unresolved findings of the Auditor of State for recovery as defined in Section 9.24 of the O.R.C..

8. The City's prior experience with the Bidder's surety.

9. The Bidder's interest in the Project as evidenced by its attendance at any pre-Bid meetings or conferences for Bidders.

10. Depending upon the type of the work, other essential factors, as the City may determine and as are included in the Specifications.

11. The foregoing information with respect to each of the Subcontractors and Suppliers that the Bidder intends to use on the Project.

e. With its Bid, the Bidder will complete and submit to the City a completed Contractor's Qualification Statement (using the form included in the Contract Documents), and thereafter will provide the City with such additional information as the City may request regarding the Bidder's qualifications.

f. The failure to submit requested information on a timely basis may result in the determination that the Bidder is not the lowest and best Bidder.

g. With its Bid, the Bidder shall submit a list of proposed subcontractors using the form included with the Contract Documents. Subcontract work shall not total more than **50%** of the Contractor's Contact with the City.

h. The City reserves the right to reject proposed Subcontractors before the Contract is awarded. The Bidder shall replace rejected subcontractors with subcontractors acceptable to the City with no change in the amount of the Bid submitted by the Bidder to City. After approval by the City of the list of proposed Subcontractors, Suppliers, and manufacturers submitted by the successful Bidder, the list shall not be changed unless written approval of the change is authorized by the City. The City reserves the right to reject Subcontractors after the Contract is awarded. In that instance, the City shall only be liable to the Contractor for the difference in Contract Price between the rejected subcontractor and the replacement subcontractor. The Contractor's markup on the replacement subcontractor shall be equal to or less than the markup on the rejected subcontractor contract.

i. With its Bid, the Bidder shall submit a list of supervisory personnel with which it intends to staff the Project indicating their respective roles on the Project. The City reserves the right to reject proposed personnel both before and after the Contract is awarded with no additional cost to the City. Once the personnel list is approved by the City, it shall not be changed without the written consent of the City.

j. No Bidder may withdraw its Bid within sixty (60) days after the date Bids are opened. The City reserves the right to waive any formalities or irregularities or to reject any or all Bids.

k. The City reserves the right to disqualify Bids, before or after opening, upon evidence of collusion with intent to defraud or other illegal practices on the part of the Bidder.

l. By submitting its Bid, the Bidder agrees that the City's determination of which Bidder is the lowest and best Bidder shall be final and conclusive, and that if the Bidder or any person on its behalf challenges such determination in any legal proceeding, the Bidder will indemnify and hold the City and its employees and agents harmless from any claims included or related to such legal proceeding, whether or not proven, and from legal fees and expenses incurred by the City, its employees, or agents that arise out of or are related to such challenge.

m. Award of Contract. The award and execution of the Contract, when required, will only be made pursuant to the legal process applicable to the City for awarding contracts of this nature.

END OF INSTRUCTIONS TO BIDDERS

C. REQUEST FOR INFORMATION (PRE-BID)

CITY OF DUBLIN
2015 SHARED - USE PATH MAINTENANCE

The person, firm, or corporation submitting a request for information shall be responsible for its prompt delivery and do so in a manner that will allow a sufficient period of time for the issuance and delivery of an Addendum before receipt of bids. The CITY OF DUBLIN will not be responsible for any other explanations of the Contract Documents made before the receipt of bids.

Please submit all pre-bid questions in writing by facsimile or electronic mail (Email) to: Darren Lee, P.E., 614-410-4699 or dlee@dublin.oh.us

Company:	Contact Name:
Email:	Phone:
Requested Information:	

D. BID COVERSHEET

BIDDERS SHALL ATTACH THIS FORM AS THE COVERSHEET TO THE BID. USE THE BOXES BELOW TO CHECK YOUR WORK. COMPLETING THIS FORM DOES NOT GUARANTEE THAT YOUR BID WILL BE RESPONSIVE OR SELECTED; BUT, SHOULD HELP TO OVERCOME THE MOST COMMON BIDDER MISTAKES. THE CITY OF DUBLIN, OHIO RESERVES THE RIGHT TO REJECT ANY AND ALL PROPOSALS AND TO WAIVE ANY INFORMALITIES OR IRREGULARITIES IN THE PROPOSALS.

1. Bidder's Company Name: _____

2. Total Bid (From Bid Form): $_____

BID PACKAGE

- ☐ Reviewed in detail?

PROPOSAL

- ☐ Acknowledged any addenda?
- ☐ Total bid amount completed in words and figures?
- ☐ Signed by a person with authority to bind your company?
- ☐ No changes made to form or conditions added?

BID SCHEDULE

- ☐ Completely filled in?

COMBINED BID/PERFORMANCE/PAYMENT BOND

- ☐ Your company name in the Principal blank?
- ☐ Surety name in the Surety blank?
- ☐ Dollar amount should be blank
- ☐ Signed as indicated?

COMBINED DELINQUENT PERSONAL PROPERTY TAX & NONCOLLUSION AFFIDAVIT

- ☐ Filled in?
- ☐ Signed?
- ☐ Notarized?

AFFIDAVIT OF AUTHORITY

- ☐ Needs completed if you are anything other than a sole proprietor
- ☐ Filled in?
- ☐ Signed?
- ☐ Notarized?

POWER OF ATTORNEY (OUT OF STATE CORPORATION)

- ☐ Must have if you are an out of state corporation

LIST OF SUBCONTRACTORS

- ☐ Completed?

LIST OF SUPERVISORY PERSONNEL

- ☐ Completed?

CONTRACTOR QUALIFICATION STATEMENT

- ☐ Completed?

INSURANCE CERTIFICATE

- ☐ Submitted?

WORKERS COMPENSATION COVERAGE

- ☐ Submitted?

W-9 FORM

- ☐ Submitted?

E. PREVAILING WAGE RATES DISK

II. BIDDING FORMS

A. PROPOSAL

CITY OF DUBLIN

2015 SHARED - USE PATH MAINTENANCE

_____ (the "Bidder") submits this Proposal having read and examined the contract documents, including but not limited to the Invitation to Bid.

Addenda Number	Date of Receipt
_____	_____
_____	_____
_____	_____

The Bidder proposes to perform all work for the Agreement for Construction in accordance with the contract documents for the following sum:

Total Bid (in figures): $ _____

Total Bid (in words): _____

_____

In the event of a discrepancy between the amount of the total bid as written in figures and in words, the amount written in words shall govern.

Unless otherwise specified in the Bid Document the amount of the total bid is based on the unit prices or lump sum set forth in the Bid Schedule attached hereto and incorporated herein.

The Bidder understands and agrees that all work to be performed under the Agreement for Construction shall be completed by the date or time required by the Contract Documents unless an extension of time is granted by the CITY OF DUBLIN.

Upon failure to have the work completed within the project time, the CITY OF DUBLIN, OHIO shall be entitled to retain or recover from the Bidder, as liquidated damages, and not as a penalty, the amounts set forth in the Contract Documents for each and every calendar day until completion. The right of the CITY OF DUBLIN, OHIO to recover liquidated damages shall not substitute for any recovery for additional costs in the event the Bidder fails to complete the Agreement for Construction according to the Contract Documents.

REPRESENTATIONS OF THE BIDDER

The Bidder represents the following:

1. The Bidder has read and understands the Contract Documents and understands that it must comply with all requirements of the Contract Documents, regardless of whether the Bidder has actual knowledge of the requirements and regardless of any statement or omission made by the Bidder that might indicate a contrary intention.

2. The Bid is based upon the items specified by the Contract Documents.

3. The Bidder has visited the site, become familiar with local conditions, and has correlated personal observations about the requirements of the Contract Documents. The Bidder has no outstanding questions regarding the interpretation of the Contract Documents.

4. Within ten (10) business days from the date of receipt the Notice of Intent to Award, the Bidder understands that it must enter into and execute an agreement for CITY OF DUBLIN, 2015 SHARED - USE PATH MAINTENANCE if awarded based on this proposal. If the Bidder does not execute an agreement for the Project for any reason, the Bidder and the Bidder's surety shall be liable to the CITY OF DUBLIN, OHIO as provided in O.R.C. Section 153.54.

5. Within ten (10) business days of the date of receipt of the Notice of Intent to Award, the Bidder understands that it must submit the following:

   a. Performance Bond. (If combined bid/performance/payment not submitted already).

   b. Copy of Additional Insured Endorsement.

6. The Bidder understands that it must furnish any other information requested by the CITY OF DUBLIN.

The Bidder hereby signs this Proposal on the ___ day of _____, 2015.

If Bidder is an individual, complete the following:

Signature: _____

Print Name: _____

Name of Business: _____

(if different from above)

Federal Identification Number: _____

Address: _____

_____

Telephone: ( ) _____

Fax: ( ) _____

If Bidder is a partnership, complete the following:

Name of Partnership: _____

By: _____

(Signature)

Print Name: _____

Federal Identification Number: _____

Address: _____

_____

Telephone: ( ) _____

Fax: ( ) _____

Names and Addresses of all general partners:

_____

_____

_____

If Bidder is a joint venture, complete the following:

Name of Joint Venture: _____

By: _____

(Signature)

Print Name: _____

Address: _____

_____

Telephone: ( ) _____

Fax: ( ) _____

Complete the following for each firm represented by the joint venture:

1. Name:_____

Federal Identification Number: _____

Address: _____

_____

Telephone: ( ) _____

Fax: ( ) _____

2. Name: _____

Federal Identification Number: _____

Address: _____

_____

Telephone: ( ) _____

Fax: ( ) _____

If Bidder is a corporation, complete the following:

Name of Corporation: _____

By: _____

(Signature)

Print Name: _____

Title: _____

Federal Identification Number: _____

Address: _____

_____

Telephone: ( ) _____

Fax: ( ) _____

State of Incorporation: _____

Names and addresses of Corporate Officers:

_____

_____

_____

If Bidder is an entity other than those described above, complete the following:

Name of Bidder:

By: _____

(Signature)

Print Name: _____

Title: _____

Federal Identification Number: _____

Address: _____

_____

Telephone: ( ) _____

Fax: ( ) _____

Type of Business Entity: _____

Names and addresses of all Principals:

_____

_____

_____

_____

_____

BID SCHEDULE

CITY OF DUBLIN

BIDDER agrees to perform all work described in the CONTRACT DOCUMENTS for the following unit prices:

2015 SHARED USE PATH MAINTENANCE PROGRAM

REF NO.	(1) ITEM	(2) DESCRIPTION	(3) QUANT.	(4) UNIT	(5) LABOR($)	(6) MATERIAL($)	(7) (5)+(6) TOTAL($)	(8) (3) X (7) TOTAL EXTENDED INFORMAL PRICE($)
		EXCAVATION AND REMOVAL						
1	202	Bike Path Removed and Disposed of A.P.P. (SY)	10,134.0	SY				
2	202	Bollards - Removed/Disposed of	3.0	EA				
3	202	Concrete Removed & Disposed of, A.P.P. (SY)	1,075.0	SY				
4	202	Curb / Curb and Gutter Removed / Disposed of, A.P.P. (LF)	325.0	LF				
5	202	Fence Removed / Disposed of, A.P.P. (LF)	10.0	LF				
6	202	Asphalt Drive Pavement Removed and Disposed of, A.P.P. (SY)	327.0	SY				
7	203	Embankment (CY)	87.5	CY				
8	203*	Excavation, A.P.P. (CY)	740.0	CY				
							EXCAVATION AND REMOVAL SUB-TOTAL	
		PAVEMENT AND RELATED						
9	204	No. 2 Stone (703)- Parking Lot / Bike Path (CY)	105.0	CY				
10	209*	Linear Grading (SY)	330.0	SY				
11	251*	Asphalt Surface Patch - Miscellaneous, 2" A.P.P. (SY)	80.0	SY				
12	253*	Pavement Repair - Bikepath, 2.5" A.P.P. (SY)	50.0	SY				
13	253*	Pavement Repair - Driveway, 4.5" A.P.P. (SY)	45.5	SY				
14	304*	Aggregate Base - Parking Lot / Bike Path (CY)	740.0	CY				
15	407*	NTSS-1HM TracklessTack Coat (GAL)	1,234.0	GAL				
16	441*	(Bikepath) Asphalt Concrete Intermediate Course, Type 2, (448), PG64-22 (TN)	1,400.0	TN				
17	441*	(Bikepath) Asphaltic Concrete Surface Course, Type-1, (448), PG64-22 (TN)	1,337.0	TN				

BID SCHEDULE

CITY OF DUBLIN

BIDDER agrees to perform all work described in the CONTRACT DOCUMENTS for the following unit prices:

2015 SHARED USE PATH MAINTENANCE PROGRAM

REF NO.	(1) ITEM	(2) DESCRIPTION	(3) QUANT.	(4) UNIT	(5) LABOR($)	(6) MATERIAL($)	(7) (5)+(6) TOTAL($)	(8) (3) X (7) TOTAL EXTENDED INFORMAL PRICE($)
		PAVEMENT AND RELATED - CONTINUED						
18	802	Valve Box - Adjust to Grade (EA)	1.0	EA				
19	Special	Asphalt Rejuvenating Agent (SY)	16,335.0	SY				
20	Special	Concrete Bike Rack - Remove and Install (EA)	4.0	EA				
21	Special	Remove and Dispose of Ex. 9' Trench Drain (EA)	1.0	EA				
22	Special	Cleaning and Prep. Of Asphalt Path for Overlay (SY)	4,786.0	SY				
				PAVEMENT AND RELATED SECTION SUB-TOTAL				
		CONCRETE AND CONCRETE STRUCTURES						
23	452	10" Plain PCC Pavement, (SY)	733.0	SY				
24	608	6" Conc. Walk w/ Agg. Base, A.P.P. (SF)	185.0	SF				
25	608	Curb Ramp, 6" Conc. w/Agg. Base, A.P.P.(SF)	2,015.0	SF				
26	609	Combination Curb and Gutter, A.P.P. (LF)	225.0	LF				
27	609*	Curb, ODOT Type 6, AP.P.(LF)	100.0	LF				
28	618	Drain Leader Pipe (LF)	200.0	LF				
29	802	Water Service Box Adjust to Grade (EA)	3.0	EA				
30	Special	Detectable Warning Panel (SF)	80.0	SF				
				CONCRETE AND CONCRETE STRUCTURES SECTION SUB-TOTAL				

BIDDER agrees to perform all work described in the CONTRACT DOCUMENTS for the following unit prices:

2015 SHARED USE PATH MAINTENANCE PROGRAM

REF NO.	(1) ITEM	(2) DESCRIPTION	(3) QUANT.	(4) UNIT	(5) LABOR($)	(6) MATERIAL($)	(7) (5)+(6) TOTAL($)	(8) (3) X (7) TOTAL EXTENDED INFORMAL PRICE($)
		STORM SEWER AND STRUCTURES						
31	604	12" ADS in Line Basin W/ H-20 Grate (EA)	3.0	EA				
32	604	Structure - Adjust Concrete Storm Top to Grade (EA)	1.0	EA				
33	604	Structure - Adjust Nyoplast Drain to Grade (EA)	3.0	EA				
34	604	Structure- Adjust, Casting Adjust (EA)	2.0	EA				
35	901	12" ADS Flared End Section w/ Adapter, (EA)	1.0	EA				
36	901	12" HDPP (720.13), Type 1 Bedding (LF)	70.0	LF				
37	901	8" ADS N-12 Pipe w/ Type 1 Bedding (LF)	20.0	LF				
38	901	18" RCP, Excavate, Remove and Relay (Type 1 Bedding) (LF)	24.0	LF				
39	Special	Remove and Dispose of Ex. 9' Trench Drain (EA)	1.0	EA				
				STORM SEWER AND STRUCTURES SECTION SUB-TOTAL				
		LANDSCAPING / RESTORATION						
40	653	Pulverized Topsoil, A.P.P. (CY)	300.0	CY				
41	659	Vegetation (Seed/Mulch), A.P.P., (SY)	4,900.0	SY				
42	671*	Erosion Control Mat, Type G (SY)	140.0	SY				
				LANDSCAPING / RESTORATION SECTION SUB-TOTAL				
		MAINTENANCE OF TRAFFIC / MISCELLANEOUS ITEMS						
43	614	Flagger- (Dedicated Flagger) (HR)	40.0	HR				
				MAINTENANCE OF TRAFFIC / MISCELLANEOUS ITEMS SECTION SUB-TOTAL				

COMPANY NAME:

_____ DATE _____

ENTER TOTAL BID AMOUNT ON PAGE 21 IN THE SPACES PROVIDED

TOTAL= _____

* DENOTES REFERENCE TO ODOT CONSTRUCTION AND MATERIAL SPECIFICATIONS (LATEST EDITION).

C. COMBINED BID/PERFORMANCE/PAYMENT BOND

CITY OF DUBLIN
2015 SHARED - USE PATH MAINTENANCE

KNOW ALL PERSONS BY THESE PRESENTS, that we, the undersigned _____ (the "Principal") and

_____ (the "Surety"),are hereby held and firmly bound unto the CITY OF DUBLIN, Ohio as obligee in the penal sum of the dollar amount of the bid submitted by the Principal to the CITY OF DUBLIN on _____, 2015 to undertake the project known as the **CITY OF DUBLIN, 2015 SHARED - USE PATH MAINTENANCE.**

The penal sum referred to herein shall be the dollar amount of the Principal's bid to CITY OF DUBLIN, incorporating any additive or deductive alternate proposals made by the Principal on the date referred to above to the CITY OF DUBLIN, which are accepted by the CITY OF DUBLIN. In no case shall the penal sum exceed the amount of _ dollars ($_). (If the foregoing blank is not filled in, the penal sum will be the full amount of the Principal's bid, including alternates. Alternatively, if the blank is filled in, the amount stated must not be less than the full amount of the bid including alternates, in dollars and cents. A percentage is not acceptable.)

For the payment of the penal sum well and truly to be made, we hereby jointly and severally bind ourselves, our heirs, executors, administrators, successors, and assigns.

THE CONDITION OF THE ABOVE OBLIGATION IS SUCH, that whereas the above-named Principal has submitted a bid for the CITY OF DUBLIN, 2015 SHARED - USE PATH MAINTENANCE.

NOW, THEREFORE, if the CITY OF DUBLIN accepts the bid of the Principal and the Principal fails to enter into a proper contract in accordance with the bid, plans, details, specifications, and bills of material; and in the event the Principal pays to the CITY OF DUBLIN the difference not to exceed ten percent of the penalty hereof between the amount specified in the bid and such larger amount for which the CITY OF DUBLIN may in good faith contract with the next lowest bidder to perform the work covered by the bid, or in the event the CITY OF DUBLIN does not award the contract to the next lowest bidder and resubmits the project for bidding, the Principal will pay the CITY OF DUBLIN the difference not to exceed ten percent of the penalty hereof between the amount specified in the bid, or the costs, in connection with the resubmission, of printing new contract documents, required advertising and printing and mailing notices to prospective bidders, whichever is less, then this obligation shall be null and void, otherwise to remain in full force and effect; if the CITY OF DUBLIN accepts the bid of the Principal and the Principal within ten days after the awarding of the contract, enters into a proper contract in accordance with the bid, plans, details specifications, and bills of material, which said contract is made a part of this bond the same as though set forth herein.

NOW ALSO, if the Principal shall well and faithfully do and perform the things agreed by Principal to be done and performed according to the terms of said contract; and shall pay all lawful claims of subcontractors, material men, and laborers, for labor performed and materials furnished in the carrying forward, performing, or completing of said contract; we agreeing and assenting that this undertaking shall be for the benefit of any material man or laborer having a just claim, as well as for the CITY OF DUBLIN herein; then this obligation shall be void; otherwise the same shall remain in full force and effect; it being expressly understood and agreed that the liability of the Surety for any and all claims hereunder shall in no event exceed the penal amount of this obligation as herein stated.

The Surety hereby stipulates and agrees that no modifications, omissions, or additions, in or to the terms of said contract or in or to the plans or specifications therefore shall in any wise affect the obligations of the Surety on the Surety's bond, and the Surety does hereby waive notice of any such modifications, omissions or additions to the terms of the contract or to the plans or specifications.

Signed this _____ day of _____, 2015.

PRINCIPAL:

_____

By: _____

(Signature)

Print Name: _____

Title: _____

Address:

_____

_____

Telephone: ( ) _____

SURETY:

_____

By: _____

(Signature)

Print Name: _____

Title: _____

Address:

_____

_____

Telephone: ( ) _____

SURETY AGENT:

_____

By: _____

(Signature)

Print Name: _____

Title: _____

Address:

_____

_____

Telephone: ( ) _____

D. ALTERNATE BID SECURITY FORM

Bidder Name: _____

Project Name: 2015 SHARED - USE PATH MAINTENANCE

The undersigned Bidder hereby submits with its bid the following bid security equaling 10% of the total amount of the bid as required by Ohio Revised Code Section 153.54:

[ ] A Certified Check

[ ] A Cashier's Check

[ ] A Letter of Credit pursuant to Chapter 1305 of the Ohio Revised Code

A bid guaranty filed under this form shall be conditioned to provide that if the bid is accepted, the bidder, after the awarding or the recommendation for the award of the contract, whichever the CITY OF DUBLIN designates, will enter into a proper contract in accordance with the bid, plans, details, specifications, and bills of material. All bid guaranties filed hereunder shall be payable to the CITY OF DUBLIN, be for the benefit of the CITY OF DUBLIN, and be deposited with, and held by, the CITY OF DUBLIN.

Bidder Signature: _____

Print Name: _____

E. AFFIDAVIT OF AUTHORITY

CITY OF DUBLIN

2015 SHARED - USE PATH MAINTENANCE

(To be completed and executed if the Contractor is anything other than a sole proprietorship.)

State of _____ (State Where Completing this Form)

County of _____ (County Where Completing this Form) ss:

_____ (Your Name), being duly sworn, deposes and says that he or she is the _____ (Position) of _____ (Business Name), a _____ (Type of Entity) organized and existing under and by virtue of the laws of the State of _____ (State), and having its principal office at:_____(Address), _____ (City), _____ (County),_____ (State).

Affiant further says that he is familiar with the records, minute books and by-laws of_____ (Business Name).

Affiant further says that _____ (Name of Person Signing Contract) _____ (Title of Person Signing Contract) of _____ (Business Name) is duly authorized to sign the Contract for the CITY OF DUBLIN 2015 SHARED - USE PATH MAINTENANCE Project on behalf of _____ (Business Name) by virtue of _____.

(Describe how the person signing the Contract has Authority to sign for example: "a provision of the by-laws" or "a resolution of the Board of Directors"—if by resolution, give date of adoption.)

_____ , _____ .

(Your Signature) (Your Position)

The foregoing instrument was acknowledged before me this _____ (date) by _____ (name of person acknowledged). Signature and Seal of person taking acknowledgement:

_____

F. COMBINED DELINQUENT PERSONAL PROPERTY TAX & NONCOLLUSION AFFIDAVIT

State of _____ (State Where Completing this Form)

County of _____ (County Where Completing this Form) ss:

_____ (Your Name), Affiant, being first duly sworn, deposes and says:

1. I am the _____ (Your Title) of _____ (Business Name), the Bidder that has submitted the attached Bid;

2. I am fully informed respecting the preparation and contents of the attached Bid and all pertinent circumstances respecting such Bid, and that such Bid is genuine and is not a collusive or sham Bid;

4. Neither the said Bidder nor any of its officers, partners, owners, agents, representatives, employees, or parties in interest, including this affiant, has in any way colluded, conspired, connived, or agreed directly or indirectly with any other Bidder, firm, or person to submit a collusive or sham Bid in connection with the contract for which the attached Bid has been submitted, or to refrain from Bidding in connection with such contract, or has in any manner directly or indirectly sought by agreement, collusion, communication, or conference with any other Bidder, firm, or person to fix the price or prices in the attached Bid or of any other Bidder, or to fix any overhead, profit, or cost element of Bid price or the Bid price of any other Bidder, or to secure through any collusion, conspiracy, connivance, or unlawful agreement any advantage against the **CITY OF DUBLIN**, **OHIO**, or any person interested in the proposed contract; and

5. The price or prices quoted in the attached Bid are fair, proper, and not tainted by any collusion, conspiracy, connivance, or unlawful agreement on the part of the Bidder or any of its agent's representatives, owners, employees, or parties in interest, including this affiant.

6. Effective this _____ day of _____, **2015**, the Bidder:

Choose One

(__) is charged with delinquent personal property taxes on the general list of personal property as set forth below:

County	Amount (include total amount, with penalties and interest thereon)
_____County	$_____
_____County	$_____
_____County	$_____
_____County	$_____

(__) is not charged with delinquent personal property taxes on the general list of personal property in any Ohio county.

Signed: _____

Title: _____

The foregoing instrument was acknowledged before me this _____ (date)

by _____ (name of person acknowledged).

Signature and Seal of person taking acknowledgement:

_____ _____

G. W-9 FORM

Form **W-9**
(Rev. December 2011)
Department of the Treasury
Internal Revenue Service

Request for Taxpayer Identification Number and Certification

Give Form to the requester. Do not send to the IRS.

Print or type
See Specific Instructions on page 2.

Name (as shown on your income tax return)

Business name/disregarded entity name, if different from above

Check appropriate box for federal tax classification:
☐ Individual/sole proprietor ☐ C Corporation ☐ S Corporation ☐ Partnership ☐ Trust/estate

☐ Limited liability company. Enter the tax classification (C=C corporation, S=S corporation, P=partnership) ▶

☐ Exempt payee

☐ Other (see instructions) ▶

Address (number, street, and apt. or suite no.)

Requester's name and address (optional)

City, state, and ZIP code

List account number(s) here (optional)

Part I **Taxpayer Identification Number (TIN)**

Enter your TIN in the appropriate box. The TIN provided must match the name given on the "Name" line to avoid backup withholding. For individuals, this is your social security number (SSN). However, for a resident alien, sole proprietor, or disregarded entity, see the Part I instructions on page 3. For other entities, it is your employer identification number (EIN). If you do not have a number, see *How to get a TIN* on page 3.

Note. If the account is in more than one name, see the chart on page 4 for guidelines on whose number to enter.

Social security number
☐☐☐ – ☐☐ – ☐☐☐☐

Employer identification number
☐☐ – ☐☐☐☐☐☐☐

Part II **Certification**

Under penalties of perjury, I certify that:

1. The number shown on this form is my correct taxpayer identification number (or I am waiting for a number to be issued to me), and
2. I am not subject to backup withholding because: (a) I am exempt from backup withholding, or (b) I have not been notified by the Internal Revenue Service (IRS) that I am subject to backup withholding as a result of a failure to report all interest or dividends, or (c) the IRS has notified me that I am no longer subject to backup withholding, and
3. I am a U.S. citizen or other U.S. person (defined below).

Certification instructions. You must cross out item 2 above if you have been notified by the IRS that you are currently subject to backup withholding because you have failed to report all interest and dividends on your tax return. For real estate transactions, item 2 does not apply. For mortgage interest paid, acquisition or abandonment of secured property, cancellation of debt, contributions to an individual retirement arrangement (IRA), and generally, payments other than interest and dividends, you are not required to sign the certification, but you must provide your correct TIN. See the instructions on page 4.

Sign Here **Signature of U.S. person ▶** **Date ▶**

General Instructions

Section references are to the Internal Revenue Code unless otherwise noted.

Purpose of Form

A person who is required to file an information return with the IRS must obtain your correct taxpayer identification number (TIN) to report, for example, income paid to you, real estate transactions, mortgage interest you paid, acquisition or abandonment of secured property, cancellation of debt, or contributions you made to an IRA.

Use Form W-9 only if you are a U.S. person (including a resident alien), to provide your correct TIN to the person requesting it (the requester) and, when applicable, to:

1. Certify that the TIN you are giving is correct (or you are waiting for a number to be issued),
2. Certify that you are not subject to backup withholding, or
3. Claim exemption from backup withholding if you are a U.S. exempt payee. If applicable, you are also certifying that as a U.S. person, your allocable share of any partnership income from a U.S. trade or business is not subject to the withholding tax on foreign partners' share of effectively connected income.

Note. If a requester gives you a form other than Form W-9 to request your TIN, you must use the requester's form if it is substantially similar to this Form W-9.

Definition of a U.S. person. For federal tax purposes, you are considered a U.S. person if you are:

- An individual who is a U.S. citizen or U.S. resident alien,
- A partnership, corporation, company, or association created or organized in the United States or under the laws of the United States,
- An estate (other than a foreign estate), or
- A domestic trust (as defined in Regulations section 301.7701-7).

Special rules for partnerships. Partnerships that conduct a trade or business in the United States are generally required to pay a withholding tax on any foreign partners' share of income from such business. Further, in certain cases where a Form W-9 has not been received, a partnership is required to presume that a partner is a foreign person, and pay the withholding tax. Therefore, if you are a U.S. person that is a partner in a partnership conducting a trade or business in the United States, provide Form W-9 to the partnership to establish your U.S. status and avoid withholding on your share of partnership income.

Cat. No. 10231X Form **W-9** (Rev. 12-2011)

H. LIST OF SUBCONTRACTORS

CITY OF DUBLIN

2015 SHARED - USE PATH MAINTENANCE

NOTE: The bidder must perform at least 50% of the total contract cost with its own forces.

1. Name of Subcontractor (Include names of any parent company) :_____

Federal Identification Number: _____

Address _____

_____

Type of Work:

Subcontractor to Provide:_____

Approximate Percentage of the Contract Cost to be Performed by Subcontractor: _____

Experience Record: _____

_____

_____

2. Name of Subcontractor (Include names of any parent company) :_____

Federal Identification Number: _____

Address: _____

_____

Type of Work:

Subcontractor to Provide:_____

Approximate Percentage of the Contract Cost to be Performed by Subcontractor: _____

Experience Record: _____

_____

_____

3. Name of Subcontractor (Include names of any parent company) :_____

Federal Identification Number: _____

Address: _____

_____

Type of Work:

Subcontractor to Provide:_____

Approximate Percentage of the Contract Cost to be Performed by Subcontractor: _____

Experience Record: _____

_____

_____

4. Name of Subcontractor (Include names of any parent company) :_____

Federal Identification Number: _____

Address: _____

_____

Type of Work:

Subcontractor to Provide:_____

Approximate Percentage of the Contract Cost to be Performed by Subcontractor: _____

Experience Record: _____

_____

_____

5. Name of Subcontractor (Include names of any parent company) :_____

Federal Identification Number: _____

Address: _____

_____

Type of Work:

Subcontractor to Provide:_____

Approximate Percentage of the Contract Cost to be Performed by Subcontractor: _____

Experience Record: _____

_____

_____

Add additional sheets if necessary.

I. CONTRACTOR QUALIFICATION STATEMENT

Contractor: _____

Date: _____

Project: **2015 SHARED - USE PATH MAINTENANCE**

The foregoing Contractor submits this Statement of Qualifications to the CITY OF DUBLIN, OHIO as part of its bid for the above named Project and represents that the information contained herein is complete and accurate to the best of the Contractor's knowledge. The CITY OF DUBLIN reserves the right to reject any, part of any, or all bids and to waive any informalities and irregularities. The Contractor expressly acknowledges this right of the CITY OF DUBLIN to reject any or all bids or to reject any incomplete or irregular bid. Contractor must furnish all information requested on this Statement of Qualifications. Failure to do so may result in disqualification of the bid. The CITY OF DUBLIN may consider the information submitted on this form in determining the lowest and best Contractor for the Project giving such weight to each item as the CITY OF DUBLIN deems appropriate. The CITY OF DUBLIN may conduct such investigations and request such documents as are deemed necessary to establish the qualifications and financial ability of the Contractor and its subcontractors and suppliers.

The Contractor authorizes the CITY OF DUBLIN and its representatives to contact the owners, design professionals, and others having knowledge (collectively "Contacts") on projects on which the Contractor has worked—whether listed on this form or not—and authorizes and requests such Contacts to provide the CITY OF DUBLIN with a candid evaluation of the Contractor's performance. By submitting its bid, the Contractor agrees that if it or any person, directly or indirectly, on its behalf or for its benefit brings an action against any of such Contacts or the employees of any of them as a result of or related to such candid evaluation, the Contractor will indemnify and hold harmless such Contacts and the employees of any of them from any claims whether or not proven that are part of or are related to such action and from all legal fees and expenses incurred by any of them arising out of or related to such legal action. This obligation is expressly intended for the benefit of such Contacts and the employees of each of them. By submitting this form, Contractor agrees that the CITY OF DUBLIN's determination of which Contractor is the lowest and best Contractor shall be final and conclusive, and that if the Contractor or any person on its behalf challenges such determination in any legal proceeding, the Contractor will indemnify and hold the CITY OF DUBLIN and its employees and agents harmless from any claims included or related to such legal proceeding, whether or not proven, and from legal fees and expenses incurred by the City, its employees, or agents that arise out of or are related to such challenge.

NAME OF PROJECT: 2015 SHARED - USE PATH MAINTENANCE

1. ORGANIZATION

1.1 How many years has your organization been in business as a Contractor?

1.2 How many years has your organization been in business under its present business name?

1.2.1 Under what other or former names has your organization operated?

1.3 If your organization is a corporation, answer the following:

1.3.1 Date of incorporation:

1.3.2 State of incorporation:

1.3.3 President's name:

1.3.4 Vice President's name(s):

1.3.5 Secretary's name:

1.3.6 Treasurer's name:

1.4 If your organization is a partnership, answer the following:

1.4.1 Date of organization:

1.4.2 Type of partnership (if applicable):

1.4.3 Name(s) of general partner(s):

1.5 If your organization is individually owned, answer the following:

1.5.1 Date of organization:

1.5.2 Name of owner:

1.6 If the form of your organization is other than those listed above, describe it and name the principals:

2. LICENSING

2.1 List jurisdictions and trade categories in which your organization is legally qualified to do business, and indicate registration or license numbers, if applicable.

2.2 List jurisdictions in which your organization's partnership or trade name is filed.

3. EXPERIENCE

3.1 List the categories of work that your organization normally performs with its own forces.

3.2 Claims and Lawsuits (If the answer to any of the questions below is yes, please attach details.)

3.2.1 Has your organization ever failed to complete any work?

3.2.2 Within the last five (5) years has your organization or any of its officers initiated any Claims, had any Claims initiated against it or them, or been involved in or is currently involved in any mediation or arbitration proceedings or lawsuits suits related to any construction project, or has any judgments or awards outstanding against it or them? If the answer is yes, please attach the details for each Claim, including the names and telephone numbers of the persons who are parties, the amount of the Claim, the type of Claim and basis for the Claim, and the outcome.

Note: As used in this document "Claim" means a Claim initiated under the Contract Documents for a project.

3.3 Within the last five years, has any officer or principal of your organization ever been an officer or principal of another organization when it failed to complete a construction contract? If the answer is yes, please attach details for each instance, including the names and telephone numbers of the persons who are parties to the contract, and the reason(s) the contract was not completed.

3.4 On a separate sheet, list construction projects your organization has in progress with an original Contract Sum of more than $543,200.00, giving the name of project, owner and its telephone number, design professional and its telephone number, contract amount, percent complete and scheduled completion date.

3.4.1 State total amount of work in progress and under contract:

3.5 Provide the following information for each contract your organization has had during the last five (5) years, including current contracts, where the Contract Sum is fifty percent (50%) or more of the bid amount for this Project, including add alternates. If there are more than ten (10) of these contracts only provide information on the most recent ten (10) contracts, including current contracts.

Project And Work	Contract Sum	Owner's Representative & Telephone Number	Engineer's Or Architect's Representative Name & Telephone Number

3.5.1 Provide the following information for each project your organization has had during the last five (5) years, which your organization believes is of comparable or greater size and complexity than the Owner's project. If there are more than five (5) of these projects, only provide information on the most recent five (5) projects, including current projects.

Project And Work	Contract Sum	Owner's Representative & Telephone Number	Engineer's Or Architect's Representative Name & Telephone Number

3.5.2 State average annual amount of construction work your organization has performed during the last five years.

3.5.3 If any of the following members of your organization's management--president, chairman of the board, or any director--operates or has operated another construction company during the last five (5) years, identify the member of management and the name of the construction company.

3.5.4 If your organization is operating under a trade name registration with the Secretary of State for the State of Ohio, identify the entity for which the trade name is registered. If none, state "none."

3.5.5. If your organization is a division or wholly-owned subsidiary of another entity or has another relationship with another entity, identify the entity of which it is a division or wholly-owned subsidiary or with which it has another relationship and also identify the nature of the relationship. If none, state "not applicable."

3.6 On a separate sheet, list the construction education, training and construction experience for each person who will fill a management role on the Project, including without limitation the Project Executive, Project Engineer, Project Manager, and Project Superintendent. For each person listed, include with the other information

the last three projects on which the person worked and the name and telephone number of the Design Professional and the Owner.

4. REFERENCES

4.1 Trade References:

4.2 Bank References:

4.3 Surety:

4.3.1 Name of bonding company:

4.3.2 Name and address of agent:

5. FINANCING

5.1 Financial Statement - Upon submission of your bid you agree to make the following financial information available to the City if requested :

5.1.1 An audited financial statement if available and, if not, a reviewed financial statement, including your organization's latest balance sheet and income statement showing the following items:

Current Assets (e.g., cash, joint venture accounts, accounts receivable, notes receivable, accrued income, deposits, materials inventory and prepaid expenses);

Net Fixed Assets;

Other Assets;

Current Liabilities (e.g., accounts payable, notes payable, accrued expenses, provision for income taxes, advances, accrued salaries and accrued payroll taxes); and

Other Liabilities (e.g., capital, capital stock, authorized and outstanding shares par values, earned surplus and retained earnings).

5.1.2 Name and address of firm preparing attached financial statement, and date thereof.

5.1.3 Is the attached financial statement for the identical organization named on page one?

5.1.4 If not, explain the relationship and financial responsibility of the organization whose financial statement is provided (e.g., parent-subsidiary).

5.2 Will the organization whose financial statement is attached act as guarantor of the contract for construction?

Certification. The undersigned certifies for the reliance of the Owner that after diligent investigation, to the best of the undersigned's belief, the information provided with this Contractor's Qualification Statement is true, accurate and not misleading.

SIGNATURE

Dated at this ____ day of _____, 2015.

Name of Organization: _____

By: _____(Print Name)

Signature: _____

Title: _____

_____, being duly sworn, deposes and says that the information provided herein is true and sufficiently complete so as not to be misleading.

Subscribed and sworn before me this _____ day of _____, 2015.

_____
Notary Public

My Commission Expires: _____

SEAL

CONTRACTOR'S ORGANIZATION

General Information

Address:_____

Telephone and Facsimile: _____

E-mail address: _____

Web site: _____

If address given above is a branch office address, provide principal home office address: _____

_____

Type of Organization

The Contractor's Organization is a:

__ Corporation

Date and State of Incorporation: _____

Executive Officers: (Names and Addresses)_____

_____

__ Partnership

Date and State of Organization: _____

Type of Partnership: __ General __ Limited __ Limited Liability __ Other: _____

Current General Partners: (Names and Addresses)_____

_____

__ Joint Venture

Date and State of Organization: _____

Joint Venturers: (For each indicate the name, address and form and state of organization, as well as the managing or controlling Joint Venturer if applicable.)_____

_____

_____

_____

__ Limited Liability Company

Date and State of Organization: _____

Members: (Names and Addresses)_____

_____

_____

_____

__ Sole Proprietorship

Date and State of Organization: _____

City or Citys: (Names and Addresses)_____

_____

__ Other

Type of Organization: _____

State of Organization: _____

Citys and/or Principals: (Names and Addresses)_____

_____

In addition to the above categories of business entities, indicate whether Contractor's organization is certified as a:

__ Disadvantaged Business Enterprise Certified by:

_____

__ Minority Business Enterprise Certified by:

_____

__ Women's Business Enterprise Certified by:

_____

__ Historically Underutilized Business Zone Small Business Concern Certified by:_____

LICENSING AND REGISTRATION

Jurisdictions in which Contractor is legally qualified to practice: (Indicate license or registration numbers for each jurisdiction, if applicable, and type of license or registration. Attach separate sheet as necessary.)

_____

_____

In the past five years, has Contractor had any business or professional license suspended or revoked?
__ Yes __ No

If yes, describe circumstances on separate attachment, including jurisdiction and bases for suspension or revocation.

CONTRACTOR'S PERSONNEL AND APPROACH

Key Construction Personnel. Create and attach Schedule A, listing the Contractor's: 1) Key Construction Personnel who will work on the Project; 2) their construction experience; and, 3) the percentage of time that each is anticipated to devote to the Project.

List types of work generally performed by Contractor's own work force:

_____

_____

_____

Subcontractors

Indicate criteria used in the selection of subcontractors (Indicate if Not Applicable).

__ Price

__ Financial strength

__ Bonding capacity

__ Previous experience with Contractor

__ Previous experience in industry

__ Subcontractor's reputation in industry

__ Availability of sufficient personnel

__ Safety record

__ Other: _____

State Contractor's policy on the bonding of its subcontractors:_____

_____

_____

Describe Contractor's proposed technical and management approach to the Project, including approaches to quality, time and cost control: (Attach additional sheets as necessary.)

CONTRACTOR'S RELEVANT EXPERIENCE

Past Projects List. In the chart below, list at least five construction projects Contractor has worked on in the past five (5) years with project delivery systems similar in size and scope to the one to be employed for this Project. (For Joint Ventures, list each joint venturer's projects separately).

City Name	Project Type	Contract Amount	Completion Date	Contact Name and Number

Current Projects List. In the chart below, list all current projects of the Contractor, including projects not yet underway, approximate dollar value of each and the percentage of completion of each project. (For Joint Ventures, list each joint venturer's projects separately).

City Name	Project Type	Contract Amount	Percentage Complete	Contact Name and Number

Annual Construction Volume. Indicate the annual volume of work completed for the past three years:

Year ____ _____

Year ____ _____

Year ____ _____

In the past five years, has Contractor defaulted, been terminated for cause or failed to complete a construction contract awarded to it? __ Yes __ No

If yes, describe circumstances on separate attachment, including dates and owner, and if applicable, Contractor's surety.

In the past five years, has any officer, partner, joint venturer or proprietor of the Contractor ever failed to complete a construction contract awarded to that person or entity in their name or on behalf of another organization? __ Yes __ No

If yes, describe circumstances on separate attachment, including dates and City, and if applicable, surety.

Describe all litigation arising from Contractor's active projects or projects worked on within the last five years. (Attach additional sheets as necessary.)

CONTRACTOR'S SAFETY PROGRAM

If Contractor has a written safety program, attach a copy.

Does the Contractor's safety program include instructions on the following:

Safety work practices __ Yes __ No

Safety supervision __ Yes __ No

Toolbox safety meetings __ Yes __ No

Emergency procedures __ Yes __ No

First aid procedures __ Yes __ No

Accident investigation __ Yes __ No

Fire protection __ Yes __ No

New workers' orientation __ Yes __ No

Do you have a safety officer/department in your company? __ Yes __ No

If yes,

Name: _____

Title: _____

Phone: _____

Do you conduct project safety inspections? __ Yes __ No

If yes, how often? _____

Who conducts this inspection?

Name: _____

Title: _____

Do you hold project safety meetings for field supervisors? __ Yes __ No

If yes, how often? __ Weekly __ Bi-weekly __ Monthly __ Less often as needed

Do you have in place an instruction program on safety for newly hired or promoted supervisors? __ Yes __ No

If yes, please attach a copy of program format.

If craft "toolbox" safety meetings are held, what is their frequency? __ Weekly __ Bi-weekly __ Monthly __ Less often as needed

Do you have a drug and alcohol testing policy? __ Yes __ No

If Yes, attach a copy of the policy.

Provide Contractor's OSHA No. 300 Log and Summary of Occupational Injuries and Illnesses for the past five years.

List all OSHA Citations and Notifications of Penalty, monetary or other, received within the last five years: (Indicate final disposition as applicable. Attach additional sheets as necessary.)

List all safety citations of violations under state law received within the last five years: (Indicate final disposition as applicable. Attach additional sheets as necessary.)

SURETY AND INSURANCE

Surety Company: (Name and Address)

Agent: (Name, Address and Telephone Number)

Total bonding capacity: $ _____

Limit per project: $ _____

Available bonding capacity as of this date: $ _____

CONTRACTOR FINANCIAL INFORMATION

List principal banks used, the approximate value of outstanding loans and general repayment history, as well as the Name, Address and Telephone Number of a contact person:

If requested by the City, provide audited financial statements for the past three (3) years, if available, and if not, then reviewed financial statements, including the information required in Section 5 – Financing, above.

State whether Contractor, or any of the individuals identified in Article 1, has/have been the subject of any bankruptcy proceeding within the last five (5) years.

__ Yes __ No

If yes, describe circumstances on separate attachment.

STATEMENT OF POTENTIAL CONFLICTS OF INTEREST

Provide information about any business associations, financial interests or other circumstances that may create a conflict of interest with the City or any other Party known to be involved in the Project.

OTHER INFORMATION

Within the past five years, has Contractor, or any of the individuals identified in Article 1 and/or Schedule A been the subject of any criminal indictment or judgment of conviction for any business-related conduct constituting a crime under state or federal law? __ Yes __ No

If yes, describe circumstances on separate attachment.

Within the past five years, has Contractor or any of the individuals identified in Article 1 and/or Schedule A been the subject of any federal or state suspension or disbarment? __ Yes __ No

If yes, describe circumstances on separate attachment.

Within the past five years, has Contractor, or any of the individuals identified in Article 1 and/or Schedule A been the subject of any formal proceeding or consent order with a state or federal environmental agency involving a violation of state or federal environmental laws? __ Yes __ No

If yes, describe circumstances. (Attach additional sheets as necessary.)

REFERENCES

Provide one additional reference for each of the following categories.

1. City

Name: _____

Address: _____

Telephone No.: _____

Contact Person: _____

2. Architect/Engineer

Name: _____

Address: _____

Telephone No.: _____

Contact Person: _____

3. Subcontractor

Name: _____

Address: _____

Telephone No.: _____

Contact Person: _____

The Undersigned, on behalf of the Contractor, certifies under that the information provided here, or attached to this form, is true and sufficiently complete to the best of the Contractor's knowledge.

CONTRACTOR

Signature_____

Printed Name: _____

Title: _____

Date: _____

III. ADDITIONAL CONTRACT DOCUMENTS

A. CITY OF DUBLIN/CONTRACTOR AGREEMENT

STANDARD AGREEMENT

CITY OF DUBLIN, OHIO

INTRODUCTION

This Agreement is entered into on , by and between the CITY OF DUBLIN, OHIO ("Owner"), located at 5200 Emerald Parkway, Dublin, Ohio 43017 , and ("Contractor'), located at for the CITY OF DUBLIN 2015 SHARED - USE PATH MAINTENANCE ("Project").

THIS DOCUMENT HAS IMPORTANT LEGAL CONSEQUENCES. CONSULTATION WITH AN ATTORNEY IS ENCOURAGED WITH RESPECT TO ITS EXECUTION, COMPLETION AND MODIFICATION.

The Owner, a political subdivision of the State of Ohio, and the Contractor have entered into this Owner-Contractor Agreement ("Agreement") as of the date set forth above. The Owner and the Contractor agree as follows:

1 WORK.

1.1 The Contractor shall furnish all the labor, services, materials, plant, equipment, tools, scaffolds, appliances, transportation, and all other things (collectively called the "Work") necessary for the timely and proper completion of the Work described in the Contract Documents for the Project. The Contractor shall provide the Performance and Payment Bonds on the forms and in the manner described in the Contract Documents.

1.2 CLEANUP. Contractor shall cleanup, repair, restore and otherwise return any site or location provided by Owner to the condition in which it was delivered to Contractor. Contractor shall repair, at its sole expense, any property it damages, whether part of the work or not, to a condition acceptable to Owner.

1.3 COMPLETION. The Project shall be finally completed by: November 20, 2015. The Contractor shall at all times furnish sufficient skilled workers, materials, and equipment to perform the Work in strict conformance with the Contract Documents and to the entire satisfaction of the Owner, so as to complete the Project by the Date for Final Completion. All materials and equipment provided shall be new, free from all defects, fit for the purpose for which intended, and merchantable.

1.4 SUPERVISION. The Contractor shall assign a competent Project Supervisor who shall be present on site. At the Owner's request and without additional charge to Owner, the Contractor shall replace the Project Supervisor. The Owner's Representative shall not be responsible for the acts or omissions of the Project Supervisor or his assistants. At a minimum, the Project Supervisor shall be present on site whenever any Contractor or Subcontractor personnel are present on site.

1.5 TAXES AND FEES. Contractor is subject to and responsible for paying fees to obtain all applicable licenses, permits, and other permissions necessary to perform its obligations under this Contract. Contractor is responsible for paying federal, state, and local taxes. Contractor agrees to

withhold all income taxes due or payable under the provisions of Income Tax Ordinances of the Owner, for qualifying wages, salaries, and commissions paid to its employees and further agrees that any of its sub-contractors shall be required to agree to withhold any such income taxes due for services performed under this Contract.

2 CONTRACT DOCUMENTS.

2.1 The Contract Documents consist exclusively of:

- This Agreement Addenda
- Invitation to Bid
- Instructions to Bidders
- Prevailing Wage Rates (if Applicable)
- Proposal
- Bid Schedule
- Performance and Payment Bonds
- Delinquent Personal Property Tax & Noncollusion Affidavit
- Affidavit of Authority (If applicable)
- List of Subcontractors
- Contractor Qualification Statement
- The current version of the CITY OF DUBLIN General Conditions Division 100
- Supplemental or Special General Conditions
- The current version of the CMS, Specification sections 200 through 1000
- Specifications
- Supplemental Specifications
- Notice of Award to Bidder
- Notice to Proceed
- Final Affidavit of Compliance with Prevailing Wages
- Plans and Drawings

3 OWNER'S REPRESENTATIVE.

3.1 The City Engineer and/or his designee is the Owner's Representative with respect to all matters involving the Owner.

3.2 Except as specifically stated to the contrary elsewhere in this Agreement, the Contractor shall direct all communications to the Owner through the Owner's Representative, although the City Manager and Fiscal Officer of the Owner are also authorized to send written communications to the Contractor.

3.3 The Owner's Representative will monitor the progress of the Contractor's Work and will conduct regular inspections of the progress of the Work as provided in the Contract Documents. Such inspections shall not relieve the Contractor of any of its obligations under the Contract Documents.

3.4 The Contractor shall at all times provide the Owner's Representative access to the Work.

4 TIME FOR COMPLETION AND PROJECT COORDINATION.

4.1 Project Time Schedule. The Owner anticipates that Work on the Project will begin upon its issuance of a Notice to Proceed and be completed by November 20, 2015, unless the Owner and Contractor agree to different commencement and completion dates.

4.2 Contractor is responsible for scheduling its subcontractors and for any delay resulting from their performance.

4.3 TIME IS OF THE ESSENCE. THE DATES IN THE PROJECT TIME SCHEDULE ARE OF THE ESSENCE OF THIS AGREEMENT. THE CONTRACTOR SHALL PROSECUTE ITS WORK IN ACCORDANCE WITH THE PROJECT TIME SCHEDULE, INCLUDING ANY AMENDMENTS THERETO.

5 DELAYS AND ACCELERATIONS.

5.1 NOTICE OF DELAYS. The Contractor shall give the Owner written notice of any delay affecting its Work within 24 hours of the commencement of the delay as required in 104.03.B of the General Conditions. The failure to give the required notice or include the required "NOTICE OF DELAY" language shall constitute an irrevocable waiver of the Contractor's right to seek an extension of time and/or additional compensation/damages for the delay. The Owner, in its sole and reasonable discretion, shall determine whether a delay shall entitle the Contractor to an extension of time, additional payment, or both.

5.2 ACCELERATION OF THE WORK. If the Contractor fails to perform as required by the Contract schedule, the Owner may require the Contractor to accelerate its Work by adding workers or working additional shifts, extended shifts or overtime, so that the Work is in final form before the Date for Final Completion. If the Owner requires the Contractor to accelerate its Work, the Contractor shall take the required action within two days of the Notice. If the acceleration is not due to fault of the Contractor, Owner shall issue a Change Order increasing the Contract Sum to pay the Contractor for the Contractor's additional costs of accelerating its Work so that the Work is in final form before the Date for Final Completion. If there is a dispute as to whether the Contractor is entitled to a Change Order for accelerating its Work, the Contractor shall proceed to accelerate its Work without waiting for a Change Order or payment of any additional compensation, but may reserve its right to make a claim against the Owner for its additional costs incurred in accelerating its Work. The Contractor's additional costs for accelerating its Work shall be determined in accordance with Paragraph 5.2.2.

5.2.1 OWNER'S OBLIGATION TO PAY. The Owner shall pay the Contractor, as provided in this Paragraph, for the Contractor accelerating its Work so that its Work is in final form before the Date for Final Completion so long as the acceleration is not required as a result of the Contractor's failure to stay on schedule. The Owner shall not be required to compensate the Contractor for accelerating its Work based on the Contractor's own decision so that the Work is in final form by the Date for Final Completion.

5.2.2 COMPENSATION FOR ACCELERATION OF THE WORK. To the extent that the Owner requires the Contractor to accelerate its Work and is obligated to pay under Section 5.2.1, the Owner shall pay the Contractor for the Contractor's additional costs of accelerating its Work, as determined in accordance with this Paragraph. The additional costs of accelerating the Work shall be (a) any premium for overtime, additional shift work, or extended shift work, (b) the cost of any additional supervision required by the acceleration, (c) out of pocket cost of any additional equipment required for the acceleration, and (d)

overhead, including home office overhead, and profit equal to ten percent (10%) of the total amount of items (a) and (b) for which additional compensation is permitted under this Paragraph. The foregoing shall be the only additional compensation and/or damages the Contractor shall be entitled to receive for accelerating its Work so that it is complete before the Date for Final Completion. As a condition precedent to its recovery of additional compensation, the Contractor shall provide the Owner with full information about the costs of accelerating its Work in the form and format requested by the Owner.

6 CORRECTIVE ACTION.

6.1 If the Owner determines that the Contractor is not cooperating or coordinating its work properly with its subcontractors, not supplying sufficient skilled workers, not cleaning up the Project, not furnishing the necessary materials, equipment, or any temporary services or facilities to perform the Work in strict conformance with the Contract Documents, or the Contractor is not on schedule, or is not otherwise performing its obligations under the Contract Documents, THE CONTRACTOR SHALL IMMEDIATELY, AND IN NOT LESS THAN FORTY-EIGHT (48) HOURS AFTER NOTICE OF SUCH DETERMINATION, OR SUCH LESSER TIME AS MAY BE PROVIDED IN THE CONTRACT DOCUMENTS, (1) COMMENCE SUCH ACTION AS IS NECESSARY TO CORRECT THE DEFICIENCIES NOTED BY THE OWNER, (2) PROCEED TO USE ITS BEST EFFORTS TO CORRECT SUCH DEFICIENCIES WITHIN THIRTY (30) DAYS OF SUCH NOTICE OR BY THE DEADLINE FOR COMPLETION OF THE PROJECT SET FORTH IN THIS AGREEMENT WHICHEVER IS SOONER AND/OR, (3) IF THE OWNER INSTRUCTS THE CONTRACTOR TO TAKE SPECIFIED CORRECTIVE ACTION, SHALL IMMEDIATELY TAKE SUCH CORRECTIVE ACTION, including but not limited to increasing the number of skilled workers, providing temporary services or facilities, and cleaning up the Project. Such corrective action shall be taken and continued uninterruptedly without waiting to initiate any dispute under Paragraph 11 of this Agreement or the resolution of any dispute initiated under such paragraph.

7 CONTRACT SUM. The lump sum Contract Sum to be paid by the Owner to the Contractor, as provided herein, for the satisfactory performance and completion of the Project and all of the duties, obligations and responsibilities of the Contractor under this Agreement and the other Contract Documents will be $. The Contract Sum includes all federal, state, county, municipal, and other taxes imposed by law, including but not limited to any sales, use, and personal property taxes payable by or levied against the Contractor because of the Work or the materials incorporated into the Work. The Contractor shall pay any such taxes.

8 LIQUIDATED DAMAGES.

8.1 The Contractor shall have its Work completed by the Completion Date stated in Paragraph 1.3; the timeline may be varied following award of the contract based upon the Contractor’s ability to perform the work on a different timeline acceptable to the Owner. By entering into this Agreement, the Contractor agrees that the period for performing the Work is reasonable and that the Contractor's Work can be substantially complete by the date stated in this Agreement.

8.2 If the Contractor does not have its Work on the Project complete by the Completion Date or as otherwise agreed by the parties, the Contractor will pay the Owner (and the Owner may set off from sums coming due the Contractor) liquidated damages as set forth in 108.07 of the General Conditions.

8.3 The Contractor acknowledges by signing this Agreement with the Owner that the amount of liquidated damages represents a reasonable estimate of the actual damages the Owner

would incur if the work is not substantially complete by the foregoing date and that the damages that may result from the failure to substantially complete the work by the foregoing date are uncertain and difficult to ascertain. These liquidated damages are damages for loss of use of the Project, and the Contractor in addition to the liquidated damages will be obligated to indemnify and hold the Owner harmless from any claims, and if the Work on the Project is accelerated because of delay, for all costs related to the acceleration of the Work, as provided in the Contract Documents. In addition to such Liquidated Damages, the Contractor shall indemnify, defend and hold the Owner and its employees and agents harmless from any and all claims, whether or not such claims are proven, and from all costs and expenses incurred, as a result of or related to such claims, including but not limited to attorneys' and consultants' fees and expenses, provided that such claims arise out of or are related to the Contractor's failure to Substantially Complete its Work by its Date for Substantial Completion. These Liquidated Damages are in addition to any other remedies available to the Owner under the Contract Documents.

9 LIMITATION AND LIABILITY.

9.1 The Owner's total liability under this Agreement shall be limited to the amount set forth in the Finance Director's certificate accompanying this Agreement. Under no circumstances shall the elected officials, officers, employees, council members, or agents of the Owner be personally liable for any obligations or claims arising out of or related to this Agreement.

10 PAYMENT

10.1 APPLICATIONS FOR PAYMENT. Payment applications shall be submitted on a monthly basis and shall reflect the amount of work completed as of the date the application for payment is submitted. On or before Completion, the Contractor shall submit to the Owner, an itemized payment application for such period in the following format and with one copy of the following documentation: 1) Invoice for work performed and materials and equipment provided for the previous pay period; 2) Current list of the Contractor's Subcontractors and suppliers showing their respective contract sums, amount paid, and amount due; 3) Contractor's Affidavit of Release of Liens with and lien releases in the format provided by the Owner for all the Contractor's Subcontractors and suppliers current through the date of the Contractor's previous Application for Payment; 4) Such other supplemental information as the Owner may require. Such other information may include a schedule of all materials and equipment stored on site.

10.2 The Owner may withhold payment in whole or in part, and may demand that the Contractor refund amounts previously paid, to protect the Owner from loss because of: 1) The Contractor's default or failure to perform any of its obligations under the Contract Documents, including but not limited to: failure to provide sufficient skilled workers; Work, including equipment or materials, which is defective or otherwise does not conform to the Contract Documents; failure to conform to the Project Time Schedule; and failure to follow the directions of or instructions from the Owner; 2) The Contractor's default or failure to perform any of its obligations under another contract that it has with the Owner; 3) The filing of third party claims, or reasonable evidence that third party claims have been or will be filed; 4) The Work has not proceeded to the extent set forth in the application for payment; 5) Any representations made by the Contractor are untrue; 6) The failure of the Contractor to make payments to its Subcontractors; 7) Damage to the Owner's property or the property of another person or laborer; 8) The determination that there is a substantial possibility that the Work cannot be completed for the unpaid balance of the Contract Sum; and/or 9) Liens filed or reasonable evidence indicating the probable filing of such liens.

10.3 The Owner will pay the Contractor within 30 days after receipt of the Contractor's payment application, provided that the payment application has been properly submitted on a timely basis and is accompanied by all of the required documentation. The Owner may establish a cut-off date for the submission of the payment application.

11 RETAINAGE.

11.1 AMOUNT OF PAYMENTS. Subject to Paragraph 8.1, the amount of the payments to the Contractor shall be determined in accordance with the following paragraphs:

11.2 PAYMENTS. Payments under the contract shall be made at the rate of 95% of the amount set forth in the Contractor's payment application and approved by the Owner until the Work is 50% complete. When more than fifty percent (50%) of the Work has been completed, the amount retained may be reduced at the City's sole discretion. The Engineer may also, at any time, increase retainage by any amount needed to protect the City's interests with respect to any incomplete, defective or unsatisfactory Work; costs or damages incurred by the City that are subject to the Contractor's indemnification obligations; or back charges that the City may assess against the Contractor.

11.3 DOCUMENTATION. Upon request, the Contractor immediately shall supply the Owner with such information as may be requested so as to verify the amounts due to the Contractor, including but not limited to original invoices for materials and equipment and documents showing that the Contractor has paid for such materials and equipment, and so as to verify that amounts due laborers, subcontractors, and materialmen have been paid to them.

11.4 FINAL PAYMENT.

11.4.1 The final application for payment shall be itemized, and the Contractor shall ensure that the final application for payment shall contain one (1) copy of each of the following documents, if not previously delivered to the Owner: 1) All items from Paragraph 10.1; 2) Consent of the Contractor's Surety to Payment; 3) An assignment to the Owner of all warranties obtained or obtainable by the Contractor from manufacturers and suppliers of equipment and materials incorporated into the Work by written instrument of assignment in a form acceptable to the Owner; and 4) Such other documentation as required by the Contract Documents, the Owner, or applicable law.

11.4.2 The making of Final Payment by the Owner shall not constitute a waiver of Claims by the Owner for the following: 1) Liens, Claims, security interests, or encumbrances arising out of the Contract Documents that are unsettled; 2) Failure of the Work to comply with the requirements of the Contract Documents; 3) Terms of special warranties required by the Contract Documents; 4) Claims for Indemnification; 5) Claims about which the Owner has given the Contractor written notice; or 6) Claims arising after Final Payment.

11.5 ESCROW ACCOUNT. The Owner and the Contractor agree that no escrow account shall be required in connection with this Agreement and that retained funds will not earn interest.

12 CHANGE ORDERS.

12.1 A Change Order is a written instrument signed by the Owner and the Contractor stating their agreement upon a change in the Work, the amount of the adjustment or the method for computing the amount of the adjustment of the Contract Sum, if any, and the extent of the adjustment in the Project Time Schedule, if any.

13 GENERAL.

13.1 MODIFICATION. No modification or waiver of any of the terms of this Agreement or of any other Contract Documents shall be effective against a party unless set forth in writing and signed by or on behalf of a party, which in the case of the Owner shall require the signature of the Owner's Representative acting under the authority of a specific resolution of the Owner. Under no circumstances shall forbearance, including the failure or repeated failure to insist upon compliance with the terms of the Contract Documents, constitute the waiver or modification of any such terms. The parties acknowledge that no person has authority to modify this Agreement or the other Contract Documents or to waive any of its or their terms, except as expressly provided in this Paragraph.

13.2 ASSIGNMENT. The Contractor may not assign this Agreement without the written consent of the Owner, which the Owner may withhold in its sole discretion.

13.3 THIRD PARTIES. Nothing contained in this Agreement shall create a contractual relationship with or a cause of action in favor of a third party against either the Owner or the Contractor.

13.4 LAW AND JURISDICTION. All questions regarding the validity, intention, or meaning of this Agreement or any modifications of it relating to the rights and obligations of the parties shall be construed and resolved under the laws of the State of Ohio. Any suit, which may be brought to enforce any provision of this Agreement or any remedy with respect hereto, shall be brought in the Common Pleas Court of Franklin, Delaware and Union County, Ohio, and each party hereby expressly consents to the jurisdiction of such court.

13.5 STATUTE OF LIMITATIONS. Regardless of any provision to the contrary, the statute of limitations with respect to any defective or non-conforming Work that is not discovered by the Owner shall not commence until the discovery of such defective or non-conforming Work by the Owner.

13.6 NOTICES. Notices, requests, or demands by either party shall be in writing, unless otherwise expressly authorized, and shall be personally served, forwarded by expedited messenger service, sent by facsimile transmission, or be given by registered or certified mail, return receipt requested, postage prepaid, and, in the case of the Owner, addressed to the address/FAX number set forth at the beginning of this Agreement marked "Urgent, deliver to Owner's Representative/Designee," and, in the case of the Contractor, addressed to its address/FAX number set forth at the beginning of this Agreement. Any party may change its address/FAX number by giving notice hereunder. All notices, requests, and demands shall be deemed received upon receipt in the case of personal delivery or delivery by expedited messenger service, including leaving the notice at the address provided herein during normal business hours; upon the expiration of forty-eight (48) hours from the time of deposit in the United States mail; or, in the case of a notice given by facsimile transmission, upon the expiration of twenty-four (24) hours after the transmission is sent.

13.7 CONSTRUCTION. The parties acknowledge that each party has reviewed this Agreement and the other Contract Documents and has voluntarily entered into this Agreement. Accordingly, the normal rule of construction to the effect that any ambiguities are to be resolved against the drafting party shall not be employed in the interpretation of this Agreement, the other Contract Documents, or any amendments or exhibits to it or them.

13.8 APPROVALS. Except as expressly provided herein, the approvals and determinations of the Owner shall be subject to the sole discretion of the Owner and will be valid and binding on the Contractor, provided only that they be made in good faith, i.e., honestly. If the Contractor challenges

any such approval or determination, the Contractor shall have the burden of proving by clear and convincing evidence that it was not made in good faith.

13.9 PARTIAL INVALIDITY. If any term or provision of this Agreement is found to be illegal, unenforceable, or in violation of any laws, statutes, ordinances, or regulations of any public authority having jurisdiction, then, notwithstanding such term or provision, this Agreement shall remain in full force and effect, and such term shall be deemed stricken; provided this Agreement shall be interpreted, when possible, so as to reflect the intentions of the parties as indicated by any such stricken term or provision.

13.10 COMPLIANCE WITH LAWS AND REGULATIONS. The Contractor, at its expense, shall comply with all applicable federal, state, and local laws, rules, and regulations applicable to the Work. Including, but not limited to Ohio's Prevailing Wage law if applicable.

13.11 PROJECT SAFETY. The Contractor shall follow all applicable safety and health regulations during the progress of the Project and shall monitor all of its employees and its subcontractors for compliance with such safety and health regulations. In undertaking the responsibilities set forth in this Paragraph, the Contractor does not assume any duty or responsibility to the employees of any Subcontractor or supplier, regardless of tier. The Owner assumes no responsibility for the development, review, or implementation of any project safety plan or for Project safety and has no authority to direct the means and methods of the Contractor.

13.12 EQUAL OPPORTUNITY. Contractor agrees that, in the hiring of employees for the performance of work under the Contract or any subcontract, no contractor, subcontractor, or any person acting on a contractor's or subcontractor's behalf, by reason of race, creed, sex, disability or military status as defined in section 4112.01 of the Revised Code, or color, shall discriminate against any citizen of the state in the employment of labor or workers who is qualified and available to perform the work to which the employment relates. Contractor further agrees that neither it, its subcontractors, or any person on the Contractor's or subcontractor's behalf, in any manner, shall discriminate against or intimidate any employee hired for the performance of work under the contract on account of race, creed, sex, disability or military status as defined in section 4112.01 of the Revised Code, or color. That there shall be deducted from the amount payable to the Contractor by the Owner under this Agreement a forfeiture of twenty-five dollars ($25.00) as required by O.R.C. Section 153.60 for each person who is discriminated against or intimidated in violation of this Agreement. That this Agreement may be canceled or terminated by the Owner and all money to become due hereunder may be forfeited for a second or subsequent violation of the terms of this section of this Agreement.

13.13 USE OF OWNER'S FACILITIES. The Contractor shall ensure that neither its employees, nor its Subcontractor's or material supplier's employees, regardless of tier, do any of the following without the express prior written consent of the Owner: use the Owner's cafeteria, rest rooms, or phones; use or bring any alcoholic beverages, controlled substances, or firearms on any property owned by the Owner. The Owner will not tolerate any such actions and any such action observed or made known to the Owner shall be dealt with severely.

13.14 ETHICS. By signing and entering into this agreement with the Owner, the Contractor represents that it is familiar with all applicable ethics law requirements, including without limitation Sections 102.04 and 3517.13 of the O.R.C., and certifies that it is in compliance with such requirements. The Contractor understands that failure to comply with the ethics laws is, in itself, grounds for termination of this contract and may result in the loss of other contracts with the Owner.

13.15 PROPERTY TAX AFFIDAVIT. The Contractor's affidavit given under ORC Section 5719.024 is incorporated herein.

13.16 ENTIRE AGREEMENT. This Agreement and the other Contract Documents constitute the entire agreement among the parties with respect to their subject matter and will supersede all prior and contemporaneous, oral or written, agreements, negotiations, communications, representations, and understandings with respect to such subject matter, and no person is justified in relying on such agreements, negotiations, communications, representations, or understandings.

CITY OF DUBLIN, OHIO

By: _____ By: _____

Its: _____ Its: _____

Date: _____ Date: _____

APPROVED AS TO FORM:

_____ Date: _____

CITY OF DUBLIN, CITY ATTORNEY

CERTIFICATE OF AVAILABILITY OF FUNDS

I Angel Mumma, hereby certify that I am the fiscal officer for the CITY OF DUBLIN, OHIO and that the amount of money to wit $ required to meet the cost of the attached Contract between the City and has been or will be, before the ordering of any materials, lawfully appropriated for the purpose of said Contract and the money so appropriated is on deposit or in process of collection to the credit of the appropriate fund free from any previous encumbrances. Moneys due in excess of the Contract Sum and any Contingency amount assigned thereto shall require an additional and separate Fiscal Officer's Statement of Availability which shall not be given unless the Contract adjustment is directly attributable to one of the express methods for increasing the Contract Sum under the Contract Documents; and, such process is completed in the manner required by the Contract Documents.

_____ _____

Date Angel Mumma, Finance Director

B. CITY OF DUBLIN GENERAL CONDITIONS DIVISION 100

City of Dublin Division of Engineering General Condition Division 100 can always be found at:

http://dublinohiousa.gov/dev/dev/wp-content/uploads/2013/02/City-of-Dublin-General-Conditions-Section-100.pdf

If you purchase a hard copy of the project documents the General Condition Division 100 will be on the CD included in the Bid Document. The General Condition Division 100 will also be posted with the project on the City of Dublin's website where the project documents are available for download.

C. SUPPLEMENTAL GENERAL CONDITIONS

THERE ARE NO SUPPLEMENTAL GENERAL CONDITIONS FOR THE CITY OF DUBLIN, 2015 SHARED – USE PATH MAINTENANCE PROJECT.

D. SUPPLEMENTAL SPECIFICATIONS

CONTRACT SPECIFICATIONS

All contract specifications in this section are to be considered a part thereof.
The specifications for this project shall be the City of Columbus Construction and Material Specifications (CMSC) 2012 edition, unless otherwise noted.

The State of Ohio, Department of Transportation Construction and Material Specifications (ODOTCMS) 2013 edition.

OWNER

All references to the "Owner" or the "City" shall identify The City of Dublin, Ohio.

CONSTRUCTION PERIOD

The construction period for this project may begin on or after July 15, 2015 and shall end on the completion date November 20, 2015. The construction period includes an allocation for inclement weather. Any request for extension of the construction period due to inclement weather shall be presented to the Engineer for consideration as soon as the contractor foresees the need for an extension to the construction period. This request must be supported by documentation showing the days lost due to the inclement weather. All work <u>including all restoration</u> shall be completed by the completion date.

SCHEDULE OF WORK

A minimum of 10 days advance notice of work is required prior of commencement of all work.

TABLE OF CURRENT CITY EVENTS

EVENT	DATES	AREA EFFECTED
Dublin Irish Festival	July 31 – August 2, 2015	Coffman Park, Tara Hill Drive, Coffman Road, Emerald Parkway (Perimeter Drive to Coffman Road), Post Road
Emerald City Half Marathon	August 23, 2015	Perimeter Drive, Hospital Drive, Hyland Croy, McKitrick Rd., Manley Rd.
First Day of School (Dublin Students)	August 26, 2015	City Wide
Halloween Spooktacular	October 15, 2015	Coffman Park, Dublin Rec. Center
Halloween Trick or Treat	Thursday, October 29, 2015	City Wide

SCHEDULE

The Contractor shall submit a work schedule in a Gantt Chart format to the Engineer for review prior to the pre-construction meeting. This schedule will detail the timing of the various scopes of work for the various sections of the project. The construction schedule shall be updated bi-monthly (twice each month), or whenever a substantial change in the schedule has occurred, and forwarded to the Engineer. A revised schedule shall be submitted with each request for payment. In the event that modifications to the schedule are necessary, the contractor shall provide the City with a minimum of 24 hours advance notice to scheduled work. The contractor shall provide the owner with a minimum of 24 hrs notice for all work.

The contractor shall communicate the planned daily operations to the Engineer at least 24 hours in advance. The communication shall contain at least: the area(s) of work, planned scope of work, general contractor's on site construction manager contact information, contractor's and sub-contractor's personnel and on site and the foreman or supervisor for work crews, maintenance of traffic plans and notes and other pertinent information.

MAINTENACE OF TRAFFIC, MOBILIZATION PUBLIC SAFETY & PUBLIC CONVENIENCE

Public Access Management:

It is the intent of this contract that all items of street repair be scheduled and performed by the Contractor in a manner as to minimize inconvenience to pedestrian and vehicular traffic. It is also the intent to provide for and maintain access to residential, commercial, industrial and public properties to the maximum extent reasonable during the performance of the work. The contractor shall phase work and provide an adequate number of steel plates in order to maintain access to driveways as much as possible. The contractor shall provide a safe and unobstructed pedestrian access corridor across areas of curb excavation at intervals of no more than 200 feet.

Notification of Access Restriction to Property Owner:
The Contractor shall provide a minimum of 24 and no more than 48 hours WRITTEN notice to property owners and residents prior to closing any driveway or portion thereof. Confirmation of the written notices shall be provided to the City Engineer by the Contractor on a daily basis. No driveway is to be closed for a period of more than seven (7) days. In the event that the seven (7) day maximum is exceeded, the Contractor will not be permitted to close any more driveways or proceed with other un-related work on the project until compliance is achieved. The contractor shall be assessed an item specific liquidated damage of $100.00 per day per driveway until the driveway(s) are opened. The contractor is required to maintain access to commercial drives at all times unless prior arrangements have been made with the property owner, proprietor, and Engineer. The contractor is permitted to close a portion of the commercial entrance with the permission of the Engineer as long as traffic is maintained through the remaining section of the entrance.

Street Closings:
No street may be closed nor may any traffic movements be restricted without prior approval by the Engineer.

Maintenance of Traffic:
All traffic control devices shall be furnished, installed and maintained in accordance with the Ohio Manual of Uniform Traffic Control Devices current edition. The limits of the construction work shall be marked with the appropriate signage (Road Work, and End Road Work) prior to the commencement of any work or staging of equipment. Special Duty Police Officers having jurisdiction in the City of Dublin shall be substituted where reference is made to "flagger" for the following: during milling, paving, recycling operations in areas of heavy traffic volumes; when work is being done on arterial streets; and as directed by the Engineer. All excavation and work areas are to be adequately marked and secured with the appropriate warning devices. All necessary traffic control devices MUST be on site, erected, and maintained prior to beginning any phase of the work.

The costs for erection, maintenance and removal of all devices shall be included in the bid price for each item of work. Costs for special duty police officers shall be paid under Item 614 "LEO w/ Patrol Car". Costs for "flaggers" shall be paid under Item 614 "Flagger". Under Item 614 Flaggers, flaggers must be used solely for traffic control operations.

The contractor shall submit for approval to the Engineer a work and traffic control plan for the phases of work planned for the work areas at least 48 hours prior to commencement of work. Work plan shall include at a minimum: the various scopes of work and phases, planned start and completion dates for the phases of work, planned route or direction for work to progress during phases, maintenance of traffic during the phases of work, and other pertinent information.

Sidewalk and Shared Use Path (bike path) closings:
Prior to commencement of work:
Advisory signs shall be placed at the intersections or path connection points to the path areas planned for work one week prior to scheduled construction date. Advisory sign shall sate that the path will be closed for maintenance and the planned dates of the closure(s).

During Construction:
Warning signs and barricades shall be posted immediately in advance of the closure and at the closest legal crosswalk indicating the closure ahead and provide a detour route around the work zone. The work on sidewalks and paths shall be scheduled and coordinated such that an unobstructed detour may be provided around the work zone. Work zones shall be adequately secured during and outside of working hours.

Mobilization:
By nature of the scope of this contract the contractor will need to mobilize to different areas at different times. The costs associated with such mobilization(s) shall be included with the unit costs of the work performed as a result of said mobilization.

Mobilization for work to correct unsuitable roadway base material encountered during construction as requested by the Engineer shall be paid for under Item 624 Mobilization - Undercut/Base Repair. Payment for this mobilization will include all mobilization necessary for work associated with the removal of unsuitable base material and placement of suitable base material as directed by the Engineer. Payment will be made under Item 624 Mobilization - Undercut/Base Repair for such request for base repair by the Engineer that requires such mobilization.

The Contractor shall provide adequate twenty-four (24) hour emergency telephone numbers to permit notification by the City in the event of a problem or emergency. Should notification be unable to be made or the Contractor fail to perform work of an immediate nature, the City will be reimbursed 2.5 times the cost to perform the work.

ENVIROMENTAL REGULATION

The contractor shall be responsible for controlling dust, and containing debris resulting from saw cutting, excavation, pavement planning, demolition or other construction related activities. The contractor shall verify that all storm structures and piping are free of construction related debris following each phase of construction activity. The Engineer may request additional or other measures be taken by the contractor if the Engineer does not believe the contractors current method(s) are effective. The costs for complying with environmental regulations are to be included in the various unit costs associated with the construction project. This includes additional measures requested by the Engineer.

CONSTRUCTION NOISE

Any device shall not be operated at any time in such a manner that the noise created substantially exceeds the noise customarily and necessarily attendant to the reasonable and efficient performance of such equipment.

UTILITIES

The Contractor shall notify the Ohio Utilities Protection Service (811) at least two (2) working days prior to performing any excavation. Care shall be taken during excavation in the vicinity of utilities such as: streetlights, traffic circuits, irrigation systems, and other utilities not expressly named, so as to not damage utilities. The contractor is responsible to utilize care and to protect all utilities, public and private. The contractor is responsible to survey the existing conditions and mark the locations of visible irrigation system components. The contractor is to utilize care when working in areas that contain irrigation systems. Any damage to irrigation systems due to negligence on the part of the contractor shall be repaired at the expense of the contactor. Any damage to such utilities that the Engineer determines to be due to the contractors neglect, shall be repaired at the expense of the contractor, without additional cost to the owner. Irrigation system repairs and repairs to underground dog fence shall be completed in a timely manner. Irrigation components in conflict with proposed work will be relocated (as directed by the Engineer) by the contractor under force account, or under other provisions made by the City. The Contractor is responsible for the support and protection of utilities in any excavation. The cost for this work is to be included in the price for each bid item.

COORDINATING WITH UTILITIES

It is the Contractor's responsibility to coordinate their work with the private utilities as required. The utility owner may be required to brace, temporarily support, or relocate their respective utilities so that the proposed roadway work may proceed.

WORKING HOURS and RESTRICTIONS

It is the intent of the City to keep inconvenience and disturbance to property owners to a minimum. The work day(s) shall be from 7 AM until 7 PM, Monday through Friday. If the Contractor desires to work on Saturdays or Holidays, or outside of these hours, the contractor must provide such request to the Engineer at least 48 hrs in advance. The contractor shall schedule and plan work so that work areas are clean and safe for weekends, holidays, and community events. All work is to be scheduled to maintain the work area clean and safe and final restoration shall follow as soon as reasonably possible. Final Payment will not be made for any item until all work including cleanup and restoration associated with the item is completed. Equipment and materials shall not be stored in streets or rights of way without approval of the Engineer.

GEOTECHNICAL INFORMATION

No subsurface exploration of the project was performed.

TEST HOLES

The Contractor is encouraged to dig test holes at the project site prior to making their bid to familiarize themselves with site subsurface conditions. The bidder shall take into account any difficulty they perceive in constructing the project due to access, rock, ground water, weak soils, topsoil, etc.

INSPECTION

All inspections shall be provided by the City of Dublin, unless otherwise provided herein.

RESTORATION

The cost for all grading and restoration of disturbed areas resulting from Curb, or Curb and Gutter replacement shall be included in each respective pay item, topsoil placed shall be paid under Item 653. Backfilling, seeding and mulching shall be completed as soon as possible after forms are removed. All restoration shall be complete within 10 Days of related work. Where sidewalks are lowered grass between the back of sidewalk and the right-of-way line shall be graded to the least possible slope. All disturbed areas shall be restored, seeded and mulched and maintained in accordance with items 653 and 659.

COORDINATION

The General Contractor is responsible for the scheduling and coordination and oversight of the work performed by their personnel as well as that of all subcontractors.
Contractor shall coordinate his work to facilitate work by others in the right-of-way and outside of the construction work limits.

PROPOSAL

No extra compensation will be paid to the Contractor by reason of compliance with any of the requirements indicated in the Specifications, but payment shall be deemed to be included among the items, as bid upon, unless otherwise specifically provided.

CONSTRUCTION LAYOUT

All construction survey, elevation, and layout stakes for this roadway project shall be provided by the Contractor. The costs for such shall be included in the associated pay items unless specifically noted otherwise. The contractor shall verify the proposed grades of new work to ensure proper drainage prior to the placement of new work. The contractor shall be responsible to maintaining line and grade including adjustment made thereto by the Engineer in order to improve or correct drainage problems.

DEWATERING

The cost of any dewatering operations required for the construction of the storm sewers, culverts, waterlines, and/or conduits shall be included in the price bid for the various items.

CONDUIT END TREATMENT

Directly following placement of any conduits, the Contractor shall construct the end treatments required by the plans at both the outlet and inlet ends. This shall include headwalls, flared end sections, riprap, rock channel protection, seeding, etc.

STAGING AREA

The Contractor shall make their own provisions to provide staging area(s) if that area is outside the right-of-way. All areas disturbed shall be fully restored to their original conditions or better to the satisfaction of the City of Dublin. The contractor at his expense shall perform all restoration. Work close to existing trees shall require the installation of tree protection fencing.

Sidewalk and Shared Use Path Work Zones: No construction materials are to be left in the work zone unless neatly stacked, and the work zone is enclosed and secured with construction fencing. Concrete form pins left in place and unattended shall have protection caps installed. Concrete forms, stakes, and debris shall be removed from the site the same day that the forms are stripped.

CONCRETE

All concrete shall be Class 'C' unless otherwise noted. Mix designs using Fly Ash must be pre-approved by the Engineer. All concrete tickets shall be labeled with the following information: 1) The location(s) where the load(s) were placed, 2) Time of arrival and Time of completion of unloading, 3) Amount of water added to load, and/or portion of load 4) Other pertinent information as requested by the Engineer. All tickets shall be delivered to the Engineer or the Engineer's representative within 24 hours of placement of concrete. Concrete shall be subject to field testing at all times. Cold weather protection for concrete shall be incidental to the associated work.

FINISHING

Sidewalk / Flatwork width and finish shall be the same as the adjacent existing sections unless directed by the Engineer. All joints and edges are to be tooled and retraced. Concrete placed under Item 452 Concrete Base shall be saw cut within 24-36 hours of placement.

CURING

All Concrete shall be cured in accordance with section 451.10 (CMS) utilizing Vocomp-20 Water-Based, Acrylic Concrete Curing and Sealing Compound, by W.R. Meadows, Inc.

WASHING OUT CONCRETE TRUCKS

Washing out the concrete trucks on the street or sidewalk shall not be allowed. Concrete washed out into excavations shall removed within 24 hours. Providing provisions for concrete washout is the responsibility of the contractor.

REMOVAL OF CONSTRUCTION DEBRIS

The Contractor shall remove construction debris on a daily basis. No construction materials are to be stored within any public R.O.W. The Contractor must be diligent in maintaining barricades to protect the work area. All excavated material and debris shall be immediately placed into truck or other vehicle for disposal. No trash shall be left on site or buried in excavations. Trash shall be immediately placed into proper receptacles or containers and disposed of by the contractor. Paving areas shall be swept clean of debris within 48 hours of completion of the paving operations.

STORAGE OF EQUIPMENT AND MATERIALS

No materials, including pipe, shall be stored within twenty (20) feet of any intersecting street or driveway. During non-working hours, storage of equipment shall comply with these same requirements and shall not in any way relieve the Contractor of their legal responsibilities or liabilities for the safety of the public. No material shall be stockpiled or dumped within the City Right-of-Way or on City owned property with out prior approval from the Engineer. All trailers or equipment parked in roadway shall be coned off for safety. Luminaries shall be utilized as requested.

CONSTRUCTION MATERIALS

No alternates or deviations shall be permitted from those construction materials shown the plans. Bidders shall not submit alternates with their bid.

SURVEY MONUMENTATION

The contractor shall carefully preserve survey reference points (e.g. bench marks, property corners, reference points, stakes and other survey reference monuments or markers). Where survey reference points are disturbed due to neglect or careless operations by the contractor, the contractor shall be responsible for resetting the survey reference points. Resetting of survey reference points shall be performed by an Ohio Professional Surveyor, licensed by the State of Ohio, as approved by the Engineer at the contractor's expense.

PAVEMENT MARKINGS

No permanent pavement markings shall be installed without prior approval of preliminary layout markings by the Engineer.

ITEM 202 BIKE PATH REMOVED AND DISPOSED OF, A.P.P.

This item consists of the removal and disposal of existing asphalt pavement, (2" - 4"), as directed by the Engineer. The Contractor is responsible to sawcut and protect adjacent pavement sections intended to remain. In the event that adjacent pavement sections become damaged, the damaged sections will be replaced by the Contractor at no cost to the City. Removed materials shall be placed immediately in a vehicle for removal with NO material placed or stored on the site.

The bid price for this item includes all costs for traffic control devices, removal and disposal, NO payment will be made for any section of the work until all items associated with the section are complete. No payment will be made under this section for work designated to be performed under Item 202 Excavation, or under Item 254 Pavement Planing. Work is to be paid per Square Yard (SY) of Bikepath Asphalt Pavement Removed and Disposed of.

ITEM 202 ASPHALT DRIVE PAVEMENT REMOVED AND DISPOSED OF, A.P.P.

This item consists of the removal and disposal of existing asphalt pavement, (~4-6"), as directed by the Engineer. The Contractor is responsible to sawcut and protect adjacent pavement sections intended to remain. In the event that adjacent pavement sections become damaged, the damaged sections will be replaced by the Contractor at no cost to the City. Unless additional excavation is specified, this item shall also include necessary excavation and hauling of spoils necessary to meet required grade elevations per plan. Removed materials shall be placed immediately in a vehicle for removal with NO material placed or stored on the site.

The bid price for this item includes all costs for traffic control devices, removal and disposal, NO payment will be made for any section of the work until all items associated with the section are complete. No payment will be made under this section for work designated to be performed under Item 202 Excavation, or under Item 254 Pavement Planing. Work is to be paid per Square Yard (SY) of Asphalt Drive Pavement Removed and Disposed of.

ITEM 202 CONCRETE REMOVED AND DISPOSED OF, A.P.P.

This item consists of the removal and disposal of existing concrete or brick pavement, curb ramps, drive aprons (4" - 8" thick) or other work as directed by the Engineer. The Contractor is responsible to saw cut and protect adjacent walk/pavement sections intended to remain. In the event that adjacent walk/pavement sections become damaged, the damaged sections will be replaced by the Contractor at no cost to the City. This item shall also include necessary excavation and hauling of spoils necessary to meet required grade elevations for the installation of new ADA Compliant Curb Ramps and adjacent walks, curbing, and retaining walls. Removed materials shall be placed immediately in a vehicle for removal with NO material placed or stored on the site.

Tree roots encountered during excavation shall be removed in locations where they interfere with the placement of the walk, ramp or apron. Roots shall be neatly sawed (free of splinters, splits, and burns) and removed to a depth of at least four (4) inches below the bottom of the concrete. If the contractor encounters roots larger than 2" in diameter, the contractor shall notify the Engineer for direction on how to proceed.

The bid price for this item includes all costs for traffic control devices, removal and disposal, NO payment will be made for any section of the work until all items associated with the section are complete. No payment will be made under this section for work designated to be performed under Item 202 Excavation. Work is to be paid per Square Yard (SY) of Concrete /Pavement Removed and Disposed of.

ITEM 202 CURB / CURB AND GUTTER REMOVED / DISPOSED OF, A.P.P.

This item consists of removal and disposal of existing combination curb and gutter in accordance with item 202 of the CMSC as amended in various locations throughout the City as directed by the Engineer.

The existing curb and gutter shall be removed in such a manner as to cause no damage to the adjacent pavement, driveway approach, adjoining sidewalk, and/or curb and gutter and minimize damage to the tree lawn strip between the curb and sidewalk. The contractor shall saw cut around curb & gutter sections prior to removal. All adjoining pavement shall be saw cut PRIOR to removal of curb/ curb & gutter. Removed materials shall be placed immediately in a vehicle for removal and disposal with NO material placed or stored on the site. In the event that damage should occur to the pavement, existing curb and gutter or the grass strip, repairs shall be completed in a manner approved by the Engineer as soon as possible at no cost to the City

Curb and Gutter that has been removed, and is to be replaced, shall be replaced as soon as possible.

The bid price for this item includes all costs for traffic control devices, removal and disposal, NO payment will be made for any section of the work until all items associated with the section are complete. Work is to be paid per Linear Foot (LF) of Curb & Gutter Removed and Disposed of.

ITEM 203 EXCAVATION, A.P.P

All excavation shall be considered as unclassified, including rock.

This item includes all work as outlined in the CMSC, as amended herein.
This item consists of all necessary equipment and labor to excavate and haul spoils from designated areas, re-grade disturbed areas in order to meet newly established grades, and clear roadway ditches to re-establish uniform flow channel.

This item is not to be used where work is designated by the Engineer to be done under item 254 Pavement Planning. Additional compensation will not be made where Item 203 is to be included in the unit cost of other items such as Item 202 Concrete /Pavement Removed and Disposed of, Item 608 Conc. Flatwork / Walk w/ Agg Base, A.P.P. (any thickness), Item 609 Curbing.
Payment for this item is per cubic yard excavated and hauled away.

ITEM 251 ASPHALT SURFACE PATCH, (Description, Depth), A.P.P.

This item consists of repairs to the asphalt as outlined under Item 251 Partial Depth Pavement Repair, ODOTCMS. This item consists of the spot removal and disposal of the existing surface course or courses by milling or other method approved by the Engineer where and as directed by the Engineer, and the replacement with asphalt concrete in accordance with Item 441 Asphalt Concrete Surface Course, Type I, (448), PG64-22 at the thickness required to bring the finished surface even with the adjacent pavement. The minimum thickness of the asphalt pavement replaced will be two (2) inches. All faces bordering the repair area shall be vertical. The surface may be milled and/or saw cut in order to insure clean vertical faces. Before placing asphalt concrete clean all vertical faces and sub-surface of pavement and coat with asphalt material according to ODOTCMS 401.14. Asphalt loads utilized for Surface Patching shall have the tickets marked accordingly.

All Patches must be brought to grade and completed the same day as excavation is performed. When the pavement has been removed and the contractor is unable to complete the required replacement in time the excavation shall be filled with patch material with a durable surface or plated. If plates are used they must be held in place by cold patch placed and compacted along the entire perimeter. The contractor will be required to maintain these patches or plates while in service. The contractor is responsible for maintaining traffic and protecting the repaired area until it has cooled sufficiently to re-open to traffic. The cost for placing, maintaining, removing, and disposing of the temporary patches or plates will be at the Contractor's expense.

The unit price for this item shall include all labor equipment and materials for the work including saw cutting, excavating, tack coating the existing pavement edges, asphalt placement, sealing the edges upon completion, all traffic control devices and other incidentals. Work is to be paid per Square Yard (SY) of Area Patched

ITEM 253 PAVEMENT REPAIR - DRIVEWAY, (Depth)" A.P.P.

This item consists of repairs to the asphalt as outlined under Item 253 Pavement Repair, ODOTCMSC as amended. This item consists of the spot removal and disposal of the existing asphalt pavement and base to a depth as specified on the plans. All faces bordering the repair area shall be vertical. The surface may be milled and/or saw cut in order to insure clean vertical faces. Before placing asphalt concrete clean all vertical faces and sub-surface of pavement and coat with asphalt material according to ODOTCMSC 401.14. The sub-base shall be re-compacted as needed.

For 3.5" depth of repairs:

Replacement with two (2) inches of Item 441 Asphaltic Concrete Intermediate Course, Type 2, (448), PG 64-22 and per the ODOTCMS and one and one-half (1.5) inches of Item 441 Asphaltic Concrete Surface Course, Type 1, (448), PG 64-22 and per the ODOTCMS.

For 4" depth of repairs:

Replacement with two (2 1/2) inches of Item 441 Asphaltic Concrete Intermediate Course, Type 2, (448), PG 64-22 and per the ODOTCMS and one and one-half (1.5) inches of Item 441 Asphaltic Concrete Surface Course, Type 1, (448), PG 64-22 and per the ODOTCMS.

For 4 ½ " depth of repairs:

Replacement with three (3) inches of Item 301 Bituminous Aggregate Base or Item 441 Asphaltic Concrete Intermediate Course, Type 2, (448), PG 64-22 and per the ODOTCMS and one and one-half (1.5) inches of Item 441 Asphaltic Concrete Surface Course, Type 1, (448), PG 64-22 and per the ODOTCMS.

For 6" inch depth of repairs:

Replacement with four (4) inches of 301 Bituminous Aggregate Base (one or two lifts depending on method of placement and compaction) and two (2) inches of Item 441 Asphaltic Concrete Surface Course, Type 1, (448), PG 64-22 and per the ODOTCMS.

ITEM 253 PAVEMENT REPAIR – BIKEPATH, 2.5", A.P.P.

This item consists of repairs to the asphalt as outlined under Item 253 Pavement Repair, ODOTCMS as amended. This item consists of the spot removal and disposal of the existing asphalt pavement and base to a depth as specified on the plans. All faces bordering the repair area shall be vertical. The surface may be milled and/or saw cut in order to insure clean vertical faces. Before placing asphalt concrete clean all vertical faces and sub-surface of pavement and coat with asphalt material according to ODOTCMS 401.14. The sub-base shall be re-compacted as needed.

For two and one half (2 ½") inch depth of repairs without overlay:
Replacement with two and one half (2 ½) inches of Item 441 Asphaltic Concrete Surface Course, Type 1, (448), PG 64-22 and per the ODOTCMS.

For two and one half (2 ½") inch depth of repairs with overlay:
Replacement with two and one half (2 ½) inches of Item 441 Asphaltic Concrete Intermediate Course, Type 2, (448), PG 64-22 and per the ODOTCMS.

Asphalt loads utilized for Pavement Repair shall have the tickets marked accordingly. All Patches must be brought to grade and completed the same day as excavation is performed. When the pavement has been removed and the contractor is unable to complete the required replacement in time the excavation shall be filled with patch material with a durable surface or plated. If plates are used they must be held in place by cold patch placed and compacted along the entire perimeter. The contractor will be required to maintain these patches or plates while in service. The cost for placing, maintaining, removing, and disposing of the temporary patches or plates will be at the Contractor's expense. The contractor is responsible for maintaining traffic and protecting the repaired area until it has cooled sufficiently to re-open to traffic.

The unit price for this item shall include all labor equipment and materials for the work including saw cutting, excavating, tack coating the existing surface, asphalt placement, sealing the edges upon completion, all traffic control devices and other incidentals. Work is to be paid per Square Yard (SY) of Pavement Repair.

ITEM 608 CURB RAMP, 6" CONCRETE w/ AGG. BASE, A.P.P.

This item consists of the placement of a (6) inch thick curb ramp as per the standard drawings of the City of Dublin constructed in accordance with item 608 of the CMSC. Ramps along arterial streets, when directed by the Engineer shall be 8" thick. The standard ramp length is 7', changes in the ramp length due to existing site conditions must be approved by the Engineer.

Full depth expansion material one half (1/2) inches thick conforming to ASTM D 1752, Type 1 (sponge rubber expansion material) shall be utilized where the work meets existing walks, curbs or structures. Fiberous type expansion material is not to be used. The Contractor is responsible to sawcut and protect adjacent walk sections intended to remain. In the event that adjacent walk sections become damaged, they will be replaced by the Contractor at no cost to the City.

Areas to be paid under this item shall include the ramp section directly adjacent and sloping perpendicular to the curb. The landing directly adjacent to the ramp shall be paid under Item 608 Concrete Flatwork. The transition ramp sloping parallel to the curb with slope exceeding 1:20 shall be paid under Item 608- 4" Concrete Flatwork/Walk.

Payment for the arterial ramps constructed at 8" thick shall be made at the unit cost for 608 Curb Ramp. The Actual area of these Ramps (SF) will be adjusted by twenty percent (SF*1.2).

Tree roots encountered during excavation shall be removed in locations where they interfere with the placement of the walk, ramp or apron. Roots shall be neatly sawed (free of splinters, splits, and burns) and removed to a depth of at least four (4) inches below the bottom of the concrete. If the contractor encounters roots larger than 2" in diameter, the contractor shall notify the Engineer for direction on how to proceed.

The contractor shall keep the areas disturbed adjacent to the concrete walks to a minimum.

This item includes all material and labor and other incidentals including, but not limited to, excavation and hauling of spoils, setting grades, formwork, finishing, and restoration as detailed under Item 653 and Item 659.

Work is paid per Square Foot (SF) of curb ramp placed, finished, and accepted.

ITEM 608 4" CONCRETE WALK w/ AGG. BASE, A.P.P.
ITEM 608 6" CONCRETE WALK w/ AGG. BASE, A.P.P.

This item consists of the placement of new four (4) and six (6) inch thick concrete sidewalks and driveway aprons and other incidental flatwork over 4" compacted aggregate base. The aggregate base shall be placed upon properly prepared and compacted sub-grade. Concrete shall be placed as indicated on the plans or as directed by the Engineer and constructed in accordance with item 608 of the CMSC and the standard drawings of the City of Dublin.

Full depth expansion material one half (1/2) inches thick conforming to ASTM D 1752, Type 1 (sponge rubber expansion material) shall be utilized where the work meets existing walks, curbs or structures. Fibrous type expansion material is not to be used. The Contractor is responsible to saw cut and protect adjacent walk sections intended to remain. In the event that adjacent walk sections become damaged, they will be replaced by the Contractor at no cost to the City.

The Contractor shall provide a minimum of 24 and no more than 48 hours WRITTEN notice to residents prior to closing any driveway. Confirmation of the written notices shall be provided to the City Engineer by the Contractor on a daily basis. No driveway is to be closed for a period of more than five (5) days. In the event that the five (5) day maximum is exceeded, the Contractor will not be permitted to close any more driveways on the project until compliance is achieved. Driveways closed longer than five days are subject to penalty of one hundred dollars ($100.) per location per calendar day.

The contractor shall keep the areas disturbed adjacent to the concrete walks to a minimum.
This item includes all material and labor and other incidentals including, but not limited to, excavation and hauling of spoils, setting grades, formwork, finishing, and restoration as detailed under Item 653 and Item 659.

Work is to be paid per Square Foot (SF) of:

Four (4) inch concrete placed, finished and accepted.
Six (6) inch concrete placed, finished and accepted.

For sidewalk/flatwork that was placed at 8" thick at the direction of the Engineer, the contractor will be paid the contract unit cost for 608 6" Concrete Flatwork/Walk w/ Agg. Base, with the square foot measurement of the 8" thick walk adjusted by twenty percent, (SF*1.2).

ITEM 609 COMBINATION CURB & GUTTER, A.P.P
ITEM 609 COMBINATION CURB & GUTTER, HEAVY DUTY, A.P.P

This item consists of installation of new combination curb and gutter in accordance with item 609 of the CMSC as amended in various locations throughout the City as directed by the Engineer. All curbing shall be placed on graded and compacted aggregate base. All debris shall be removed from excavated area(s) prior to grading and compacting of aggregate base. All curbing shall be installed using front and back forms unless directed otherwise by the Engineer.

The Contractor is responsible for maintaining line and grade.

The Contractor shall identify, mark and restore all drain openings in the curb. Drain openings in the curb are to be cored, and not formed in place. Payment for coring the Drain openings will be under item "Special- Curb Can Holes" Drain leaders shall be replaced up to two (2) foot behind the curb and reconnected in a manner approved by the Engineer as soon as possible after curb forms are removed. Payment will be made under item 618 "DRAIN LEADER PIPE" for additional pipe installed where directed by the Engineer.

The excavation behind the curb shall be backfilled with compacted topsoil to a point one (1) inch above the curb as soon as possible after curb forms and other debris are removed. Disturbed areas shall be seeded and mulched in accordance with item 659.

The overdig in front of the curb, after being cleaned of loose debris and excess concrete, shall be filled with LSM, type 2 , and leveled uniformly to 1 ½ " below face of gutter or adjoining pavement. Class C concrete may also be used provided the concrete is properly consolidated to avoid voids and leveled uniformly. On streets where the remaining pavement section is being removed and replaced compacted granular material may be used for temporary fill of the overdig area(s). The overdig shall be filled within 24 hours of removal of front forms or placement of curb using curb machine.

Driveway dropped curbs shall be constructed utilizing Class MS Concrete conforming with section 499 of the CMSC. If the dropped curb is placed in conjunction with adjoining curbing utilizing a slip form machine, the utilization of MS concrete for the dropped curb sections is not required provided the driveways are opened to traffic within the time specified within the supplemental specifications. Full depth expansion material one half (1/2) inches thick conforming to ASTM D1752, Type 1 shall be utilized where the new work meets existing concrete. The Contractor shall provide a minimum of 24 and no more than 48 hours WRITTEN notice to residents prior to closing any driveway. The Contractor on a daily basis shall provide confirmation of the written notices to the City Engineer. No driveway is to be closed for a period of more than five (5) days. In the event that the five (5) day maximum is exceeded, the Contractor will not be permitted to close any more driveways on the project until compliance is achieved. Driveways closed

longer than five days are subject to penalty of one hundred dollars ($100.) per location per calendar day.

Curb replacement is to be completed prior to the start of asphalt surface overlays on any street included in this contract.

The bid price for this item includes all costs for traffic control devices, removal and disposal, setting of grade stakes, curb and gutter installation, drain leader connection, saw cutting, and final restoration. NO payment will be made for any section of the work until all items associated with the section are complete. Work is to be paid per Linear Foot (LF) of Curb & Gutter Installed and Accepted.

ITEM 609 CURB, ODOT TYPE 6, A.P.P.

This item consists of installation of new type 6 curb in accordance with item 609 of the ODOTCMS as amended in various locations throughout the City as directed by the Engineer. All curbing shall be placed on graded and compacted aggregate base. All debris shall be removed from excavated area(s) prior to grading and compacting of aggregate base. All curbing shall be installed using front and back forms unless directed otherwise by the Engineer.

The Contractor is responsible for maintaining line and grade.

The Contractor shall identify, mark and restore all drain openings in the curb. Drain openings in the curb are to be cored, and not formed in place. Payment for coring the Drain openings will be under item “Special- Curb Can Holes” Drain leaders shall be replaced up to two (2) foot behind the curb and reconnected in a manner approved by the Engineer as soon as possible after curb forms are removed. Payment will be made under item 618 “DRAIN LEADER PIPE” for additional pipe installed where directed by the Engineer.

The excavation behind the curb shall be backfilled with compacted topsoil to a point one (1) inch above the curb as soon as possible after curb forms and other debris are removed. Disturbed areas shall be seeded and mulched in accordance with item 659.

The overdig in front of the curb, after being cleaned of loose debris, shall be filled with LSM, type 2 , and leveled uniformly to 1 ½ ” below the surface of the adjoining pavement. Class C concrete may also be used provided the concrete is properly consolidated to avoid voids and leveled uniformly. On streets where the remaining pavement section is being removed and replaced compacted granular material may be used for temporary fill of the overdig area(s). The overdig shall be filled within 24 hours of removal of front forms or placement of curb using curb machine.

Driveway dropped curbs shall be constructed utilizing Class MS Concrete. conforming with section 499 of the ODOTCMS. If the dropped curb is placed in conjunction with adjoining curbing utilizing a slip form machine, the utilization of MS concrete for the

dropped curb sections is not required provided the driveways are opened to traffic within the time specified within the supplemental specifications. Full depth expansion material one half (1/2) inches thick conforming to ASTM D1752, Type 1 shall be utilized where the new work meets existing concrete. The Contractor shall provide a minimum of 24 and no more than 48 hours WRITTEN notice to residents prior to closing any driveway. The Contractor on a daily basis shall provide confirmation of the written notices to the City Engineer. No driveway is to be closed for a period of more than five (5) days. In the event that the five (5) day maximum is exceeded, the Contractor will not be permitted to close any more driveways on the project until compliance is achieved. Driveways closed longer than five days are subject to liquidated damages of one hundred dollars ($100.) per location per calendar day

Curb replacement is to be completed prior to the start of asphalt surface overlays on any street included in this contract.

The bid price for this item includes all costs for traffic control devices, removal and disposal, setting of grade stakes, curb installation, drain leader connection, saw cutting, and final restoration. NO payment will be made for any section of the work until all items associated with the section are complete. Work is to be paid per Lineal Foot (LF) of Type 6 Curb Installed and Accepted.

ITEM 618 DRAIN LEADER PIPE, A.P.P.

This item consists of the removal and replacement of existing roof drain pipes performed in conjunction with sidewalk and curb and gutter replacement or other work as directed by the Engineer and in accordance with the CMSC.

All downspout drain tile and storm sewers damaged, disturbed, or removed as a result of the Contractor's operations shall be replaced with schedule 40 pipe or better, maintaining the same gradient as existing. Replaced drain tile shall be laid on compacted bedding equal density to surrounding stratum. Replacement shall be done at the time of the backfill operation. Pipe size is 3” diameter for residential and 4” diameter for commercial, or as specified.

The cost of this work is to be included in the unit price bid for the curb replacement items as detailed under Item 608 Concrete Curb and Gutter, and Item 608 Type 6 Concrete Curb.

The unit price for this item shall include all labor, materials including approved connectors, equipment and other incidentals. Work is to be paid per Lineal Foot (LF) of drain leader pipe replaced where not included under other pay item(s).

ITEM 653 PULVERIZED TOPSOIL, A.P.P.

PART 1 GENERAL

1.01 SECTION INCLUDES

A. The work shall consist of furnishing all labor, equipment and material necessary to place and grade topsoil for preparation for vegetation

1.02 MEASUREMENT & PAYMENT

A. The topsoil area will be measured by the Cubic Yard (CY), delivered, placed, and graded for:
   a. Areas designated for payment under this section in the plans and specifications.
   b. Material used outside of the work limits will not be measured.

B. Payment will be made under this section for additional pulverized topsoil placed at the direction of the Engineer outside of original proposed work areas designated for the installation of curb ramps and concrete walk (item 608), curbing (609), and associated utility work.

1.03 SUBMITTALS

A. The Contractor shall submit a complete materials composition description of the pulverized topsoil, which includes a minimum of the makeup of the topsoil including but not limited to the organic materials, silts, clay, and moisture contents expressed as a percentage range. Pulverized topsoil containing non-decomposed organic matter will not be accepted.

1.04 DELIVERY, STORAGE AND HANDLING

A. Deliver pulverized topsoil in covered vehicle and in immediate workable condition showing analysis of content as specified above.

B. The person whom delivers and/or places topsoil shall make note of location and amount of pulverized topsoil placed at each location.

C. The topsoil may be placed my mechanical means, but shall not be placed by means of a blower type of application, (except for the top one and one-half inches, which may be placed by means of a blower type of application.)

1.05 MAINTENANCE

A. Maintain topsoil areas and supply additional topsoil where necessary, including areas affected by erosion.

PART 2 PRODUCTS

2.01 SOIL MIXTURE

A. The pulverized topsoil mixture shall me loamy, loose, and free of non-composted organic matter and rubbish. No solid material over 19 mm, ¾ inch.

B. Composition: (%)

a.	Organic Material	5-8
b.	Silt	30-50
c.	Clay	15-25
d.	Sand	20-35
e.	PH	5.4-7.6
f.	Soluble Salts	580 ppm maximum
g.	Moisture	14-26

PART 3 EXECUTION

3.01 EXAMINATION

A. The Contractor shall not begin work in this section until the Engineer has approved the landscape grading.

3.02 APPLICATION

A. The topsoil placement shall be completed within five days after completion of associated concrete flatwork.

a. The contractor shall take care to not disturb any larger area than necessary in order to minimize post construction restoration.

b. The contractor shall re-establish finish grade to gradually and evenly meet existing adjacent grade and adjacent curbing, sidewalk, ramps, roadway, and other utility structures.

3.03 INSTALLATION

A. Pulverized topsoil

1. Shall be compacted in lifts of not more than 6 inches at one time.

2. All Topsoil placed shall be compacted to at least 85% compaction, with the exception of the top two (2) inches.

3. The top two inches of pulverized topsoil shall be placed loose for use as seed bed.

4. The finished elevation of placed and graded pulverized topsoil shall be 1 inch above edge of impervious surfaces to allow for settlement.

3.04 ADJUSTING

A. Any vegetated areas, which are found to not have an adequate amount of topsoil during the first year, shall have additional pulverized topsoil placed as soon as weather conditions permit, at no additional cost to the Owner.

3.05 PROTECTION

A. The Contractor shall secure the work area and protect the graded areas from any traffic, disturbances, wildlife or public use until vegetation is established.

ITEM 659 VEGETATION (Seed/Mulch), A.P.P. :

PART 1 GENERAL

1.01 SECTION INCLUDES

A. The work shall consist of furnishing all labor, equipment and material necessary to seed, mulch, stabilize, fertilize, maintain and establish vegetation for the areas as specified herein.

1.02 MEASUREMENT & PAYMENT

A. The vegetated area will be measured to the nearest Square Yard (SY). Areas outside of the work limits will not be measured.

B. Payment for all work performed under this Section relating to concrete curbing shall be included in the contract unit price for installation of concrete curbing (item 609).

a. The contractor shall take care to not disturb any larger area than necessary in order to minimize post construction restoration.

C. Payment will be made under this section for areas designated to be paid for under 659 Vegetation (Seed/Mulch), A.P.P.

D. Payment will be made under this section for additional seeding at the direction of the Engineer outside of the original work limits.

1.03 SUBMITTALS

A. The Contractor shall submit a complete materials list of items proposed for the work and a description of how the work will be completed.

B. The Contractor shall submit seed and fertilizer certifications for all bags used in the project.

1.04 DELIVERY, STORAGE AND HANDLING

A. Deliver grass seed in original containers showing analysis of seed mixture, percentage of pure seed, year of production, net weight, date of packaging, and location of packaging. Damaged packages are not acceptable.

D. Deliver fertilizer in waterproof bags showing weight, chemical analysis, and name of manufacturer.

1.05 MAINTENANCE

A. Maintain vegetated surfaces and supply additional topsoil where necessary, including areas affected by erosion.

B. Replant damaged grass areas showing root growth failure, deterioration, bare or thin spots, and eroded areas.

C. Maintain adequate moisture for vegetation as outlined in 3.02, G.

PART 2 PRODUCTS

2.01 GROWING MEDIA

A. Fertilizer: starter fertilizer 20-27-5 (Nitrogen-Phosphorous-Potassium)

2.02 SEED MIXTURE

A. The following seed mixture shall be used:

1.	Turf Type Tall Fescue	40%
2.	Fine Fescue	40%
3.	Perennial Ryegrass	20%

B. The tall fescue and fine fescue shall each consist of two different cultivars. The "Kentucky-31" cultivar shall not be used for the tall fescue. Only the improved "turf-type" tall fescue cultivars shall be accepted. (Example cultivars: Tar Heel, Rebel Exceda, Matador, Silver Star, Silverado II)

C. The seed purity (amount free from inert matter or undesired noxious weeds) shall be at **least 98%.**

D. The germination rate of the applied seed shall be at **least 90%.**

2.03 MULCH

A. Mulching material: Oat or wheat straw, reasonably free from weeds, foreign matter detrimental to plant life, and in dry condition. Hay or chopped cornstalks is not acceptable. Hydro mulch is not permitted as surface mulch.

B. Establishment blanket: Uniform open weave excelsior matting; erosion control mulching fabric consisting of knitted construction of yard interwoven with strips of biodegradable paper; or organic fiber protective fiber mat consisting of half-inch layer of chopped straw, knitted into mat with thin netting of biodegradable polypropylene.

PART 3 EXECUTION

3.01 EXAMINATION

A. The Contractor shall not begin work in this section until the Engineer has approved the landscape grading.

3.02 APPLICATION

A. The seeding shall be completed within three days after completion of landscape grading or as soon thereafter as conditions are favorable. Seeding shall occur between March 15th and October 1st. Should weeds propagate prior to seeding or re-seeding they shall be treated or removed in a manner satisfactory to the Engineer.

B. The seedbed shall be prepared by pulverizing and breaking up the soil to a minimum depth of two inches with a disk harrow, drag harrow, spike tooth harrow or similar tool. All rocks over three-quarter inch in diameter, clods and undesirable material that would interfere with seeding operations shall be removed. Immediately after seedbed preparation, the Contractor shall apply the fertilizer uniformly over the area to be seeded at a rate of: 1.5 Lbs Nitrogen per 1000 ft^2 .

Desired rate in lbs N/1000 ft^2	/	% nutrient	=	Total fertilizer needed/1000 ft^2
Total fertilizer needed/1000 ft^2	X	Area to be treated in ft^2	=	lbs fertilizer needed to treat the area

C. The seed shall be drilled, broadcast or hydro seeded uniformly over the seedbed at a rate of 10 lbs per 100 SY (480lb per acre) using methods and equipment acceptable to the Engineer. The seeded area shall be passed over with a hand rake to help cover more seed and improve seeding establishment. Application of grass seed and fertilizer at the same time, in the same machine is not permitted except when hydro-seeding. Seed may be placed with the top 1 inch of pulverized topsoil if the topsoil is placed with the means of a blower.

D. Seed sowing is not permitted immediately following rain, when the ground is too dry, or during windy periods.

E. The Contractor shall seed and mulch all disturbed access areas, slopes, ditches, spoil areas and all other areas disturbed by construction.

F. The Contractor shall place establishment blanket on areas with slopes equal to and exceeding 3:1, and in all areas of direct channel flow.

G. Areas shall be watered as necessary to promote good growth during the germination and establishment period. During the establishment period the Contractor shall water a minimum of one-half (1/2) inch over the seeded area two times per week. In dry weather, more frequent watering will be required. Watering shall continue as required depending on weather until area(s) are accepted. Contractor shall log all watering operations. The contractor shall allow a minimum of 7.5 ccf water /1000 SY of seeding for every 7 days.

3.03 INSTALLATION

A. Straw Mulch

1. The approved mulch shall be applied over the seeded area at a rate of 3/4 pound per SY with a maximum thickness of ½-inch when compressed between the thumb and forefinger. Hydro mulching will not be permitted as surface mulch.
2. The straw mulch shall be secured in place with tacifier.

B. Establishment Blanket:

1. Cover seeded slopes where grade is 3:1 or greater with excelsior matting. Roll matting down over slopes without stretching or pulling.
2. Lay matting smoothly on soil surface, burying top end of each section in a narrow 6-inch trench. Leave 12-inch overlap from top roll over bottom roll. Leave 4-inch overlap over adjacent section.
3. Staple outside edges and overlaps at 36-inch intervals.
4. Lightly dress slopes with topsoil to ensure close contact between matting and soil.

3.04 ADJUSTING

A. Any vegetated areas, which are found to not have an adequate growth of cover during the first year, shall be re-seeded as soon as weather conditions permit, at no additional cost to the City. Adequate cover is pure fescue and rye vegetation cover of at least 90%. Weeds shall be removed and soil prepared for proper seeding.

3.05 PROTECTION

A. The Contractor shall secure the work area and protect the vegetated areas from any traffic, disturbances, wildlife or public use until vegetation is accepted.

ITEM SPECIAL: DETECTABLE WARNING PANEL

Description.

This work shall consist of furnishing all material, equipment, and labor necessary for the placement of detectable warning devices at curb ramps or other walking surfaces, complete and ready for service at locations shown or detailed on the plans or specifications. All work shall be in accordance with Section 1108 of the Architectural and Transportation Barriers Compliance Board's "Draft Guidelines for Accessible Public Rights-of-Way", dated June 17, 2002 as amended, supplemented and adopted.

Materials.

All products shall receive prior written approval by the Engineer. Detectable warning surfaces shall be textured to provide slip resistance and shall contrast visually with adjacent walking surfaces – either light-on-dark, or dark-on-light. The preferred color for a light background (concrete) shall be brick red. The preferred color for a brick background shall be black. Color shall be integral with the detectable warning device and shall not be surface applied. Paints or other surface coatings shall not be used unless integral to the system being applied. Cast iron detectable warning panels shall be factory powder coated. Detectable warning surfaces shall be classified by type of material and/or application method:

– Surface-Applied Panels –

System shall be ADA Solutions surface applied panels, or other approved equal.
2'x4' Panels: Part Number: 2448IDRET2
2'x5' Panels: Part Number: 2460IDRET2
Manufacturer: ADA Solutions
PO Box 3
North Billerica, MA 08162
800-372-0519

Approved for retrofit to pre-existing ramp only.

– Replaceable Cast in Place Panels –

System shall be TufTile Cast Iron replaceable cast in place ADA Tiles
24"x24" Panels: Part Number: TTCI2424-WS-(Color ID)
24"x30" Panels Part Number: TTCI2430-WS-(Color ID)
Tile Connector: Part Number: TT-Connector
Manufacturer: TufTile
1200 Flex Ct.
Lake Zurich, IL
888-960-8897

Approved for new construction installations only.

Dimensions.

Truncated domes in a detectable warning surface shall have a base diameter of 0.9 inches (23 mm) minimum to 1.4 inches (36 mm) maximum, a top diameter of 50% of the base diameter minimum to 65% of the base diameter maximum, and a height of 0.2 inches (5 mm).

Truncated domes in a detectable warning surface shall have a center-to-center spacing of

2.35 inches. Detectable warning surfaces shall extend 24 inches (610 mm) minimum in the direction of travel and the full width of the curb ramp, landing, or blended transition. The detectable warning surface shall be located so that the edge nearest the curb line is 6 inches (150 mm) minimum and 8 inches (205 mm) maximum from the face of the curb line.
Domes shall be aligned on a square grid, aligned in rows parallel and perpendicular to the predominant direction of travel. Domes must be not be skewed diagonally to the direction of travel.

Application.

Detectable warning devices shall be installed in accordance with manufacturer's specifications and in accordance with this specification, or as otherwise specified on the plans.
The finished surface shall be uniformly profiled to match the adjoining surfaces without lips, obstructions and shall drain completely.
Panel sizes and placement:

4.5' wide ramps: 4' Detectable Warning Panel
5.5' wide ramps: 5' Detectable Warning Panels
8.5' wide ramps: 8' Detectable Warning Panels

Detectable warning panels shall be placed 3" – 4" behind back of curb to allow for edging and tooling of front edge of ramp between detectable warning panel and back of curb

The contractor and manufacturer shall jointly warrant the installed surface to last no less than five years without losing more than two percent of the truncated domes due to delaminating as a result of product failure, and shall further warrant the surface for a minimum of five years against fading, chipping, peeling, cracking, or loss of original shade due to sunlight, salt or exposure to weathering.

– Surface-Applied Panels-

Panels shall be installed in accordance with manufacturer's specifications as approved by the Engineer. After installation the warning panel shall be flush around the edge with the concrete surface. A sealant and adhesive shall be applied to the underside and perimeter of the panel. The perimeter sealant shall flow into perimeter cut to seal edge. The panel shall be mechanically anchored to the substrate.

– Cast in Place Panels-

Panels shall be installed in accordance with manufacturer's specifications as approved by the Engineer. After installation the warning panel shall be flush around the edge with the concrete surface. A sealant shall be applied to the perimeter of the panel. The panel shall be anchored securely to the substrate without voids or air pockets under the panel.

Method of Measurement.

The number of detectable warning devices shall be the actual Square Foot (SF) installed in place, complete and accepted. This item shall be complete and include all work necessary to provide a complete and useable detectable warning device. This shall include but not be limited to: layout, saw-cutting, removals, concrete and cement base materials, bedding, surface preparation, surface sealant, and repair of adjoining areas disturbed by the installation of the detectable warning surface.

Basis of Payment.

Unless specifically included under other items on the plans, payment for accepted quantities will be made at the contract unit price for:

Item Special
Detectable Warning Panel (SF)
Note:
Payment shall include all costs of furnishing material, equipment, and labor necessary for the installation of detectable warning devices, and shall be in addition to any overlapping payments for square foot of sidewalk / curb ramp.

ITEM SPECIAL: ASPHALT REJUVENATING AGENT, RECLAMITE OR EQUAL

SCOPE

This work shall consist of furnishing all labor, equipment, material to perform all operations necessary for the rejuvenation and in-depth sealing of asphaltic-concrete surface course by spray application of petroleum oil and resins emulsified with water, complete, in accordance with the specifications, the applicable drawings and subject to terms and conditions of the contract.

1. SUBMITTAL MATERIALS

The asphalt rejuvenating agent shall be composed of a petroleum resin oil base uniformly emulsified with water. The contractor shall submit a certified statement from asphalt rejuvenating manufacturer showing that the asphalt rejuvenating emulsion conforms to the following physical and chemical requirements.

2. SPECIFICATION

Designation	Test Method	Requirements
Viscosity, S.F. at 77 F, sec	ASTM D244-60	15-40
Residue, % Min. (a)	ASTM D244-60 (Mod.)	60-65
Miscibility Test (b)	ASTM D244-60 (Mod.)	No Coagulation
Sieve Test, % Max. 8	ASTM D244-60 (Mod.)	0.10
Particle Charge Test	ASTM D244-60	Positive
Tests on Residue	ASTM D244-60 (Mod).	
Viscosity cs, 140 F	ASTM-D445	100-200
Asphaltenes, % Max.	ASTM-D2006-65-T	0.75
Maltenes Dist. Ratio	ASTM-D2006-65-T	0.3-0.5

$\frac{PC + A1}{S + A2}$ (d)

ASTM D244 Modified Evaporation Test for percent of residue is made by heating 50 gram sample to 3,000° F until foaming ceases, then cool immediately and calculate results.

Test procedure identical with ASTM D244-60 except that 0.02 Normal Calcium Chloride solution shall be used in place of distilled water.

Test procedure identical with ASTM D244 except that distilled water shall be used in place of 2 % sodium oleate solution.

In the Maltenes Distribution Ratio Test by ASTM Method D2006-65-T;

PC - Polar Compounds A1 - First Acidaffins

A2 - Second Acidaffins S - Saturates

The material shall have a record of at least five years of satisfactory service as an asphalt rejuvenating agent and in-depth sealer; such satisfactory service being based on the capability of the material to increase the ductility and penetration value of the asphalt binder in the pavement surface and to seal the pavement in-depth to the intrusion of air and water.

The Contractor shall furnish the manufacturers certification that the material proposed for use is in compliance with the specification requirements and include copies of supporting tests and previous use documentation. The product RECLAMITE, or approved equal, is acceptable.

3. APPLICATION TEMPERATURE

The temperature of the emulsion at the time of application shall be that as recommended by the manufacturer.

4. HANDLING OF ASPHALT REJUVENATING AGENT

Contents in tank cars or storage tanks shall be circulated at least ten minutes before withdrawing any material for application. When loading the distributor, the asphalt rejuvenating agent concentrate shall be loaded first and then the required amount of water shall be added. The water shall be introduced into the distributor with enough force to cause agitation and thorough mixing of the two materials. To prevent foaming, the discharge end of the water hose or pipe shall be kept below the surface of the material in the distributor tank.

5. EQUIPMENT

All tools, machines and equipment used in the performance of the work shall be subject to the approval of the Engineer and shall be maintained in a safe and satisfactory working condition at all times.

6. CLEAN EQUIPMENT

Equipment used for the application of the petroleum oil and resin emulsions shall be clean of all foreign and objectionable material. An asphalt distributor which shall be used as a spreader will be cleaned of all of its asphalt materials and washed out to the extent that no discoloration of the emulsion may be perceptible. Cleanliness of the spreading equipment shall be subject to the approval and satisfaction of the Engineer.

The distributor for spreading the emulsion shall be self-propelled and shall have

pneumatic tires. The distributor shall be designed and equipped to distribute the emulsion uniformly on variable widths of surface at readily determined and controlled rates from 0.05 to 0.5 gallons per square yard of surface and with an allowable variation from any specified rate not to exceed five percent. Distributor equipment shall include full circulation spray bars, pump, achometer, volume measuring device and a hard hose attachment suitable for application of the emulsion manually to cover areas or patches inaccessible to the distributor. The distributor shall be equipped to circulate and agitate the emulsion within the tank.
A check of distributor rate and uniformity of distribution shall be made when directed by the Engineer.

7. WEATHER LIMITATIONS

The emulsion shall be applied only when the existing surface to be treated is thoroughly dry and when the weather is clear and is not threatening rain. The emulsion shall not be applied when the atmospheric temperature is below 40° F.

8. APPLICATION

Following pre-cleaning of the asphaltic surface, the asphalt rejuvenating agent shall be applied by distributor at the temperature recommended by the manufacturer and at the pressure required for the proper distribution. The emulsion shall be so applied that uniform distribution is obtained at all points of the areas to be treated. Distribution shall be commenced with a running start to insure full rate of spread over the entire area to be treated. Areas inadvertently missed shall receive additional treatment as may be required by hand sprayer application.

Application of asphalt rejuvenating agent shall be on one-half width of the pavement at a time.

When application is made under traffic and/or a previously closed road must be opened to traffic and slow penetration occurs and in the opinion of the Engineer, a hazard exists to the traveling public, a light coating of dry, gritty sand shall be applied to the surface in sufficient amounts to protect the traveling public. Sand shall be applied at the rate of one pound per square yard.

Before spreading, the asphalt rejuvenating agent shall be blended with water at the rate of two (2) parts of rejuvenating agent to one (1) part water, by volume or as specified by the manufacturer. The combined mixture of asphalt rejuvenating agent and water shall be spread at the rate of 0.05 to 0.08 gallons per square yard, or as approved by the Engineer.

Excess sand, post-treatment and street cleaning shall occur within two days following application.

When more than one application is to be made, succeeding applications shall be made as soon as penetration of the preceding application has been completed and approval is granted for additional applications by the Engineer.

Grades or super elevations of surfaces that may cause excessive runoff, in the opinion of the Engineer, shall have the required amounts applied in two or more applications as directed.

The rejuvenating agent shall be applied by an experienced applicator of such material. The applicator shall have a minimum of three years experience in applying the product proposed for use. They shall submit a list of the last five projects on which they applied said rejuvenator.

9. TRAFFIC

The contractor shall schedule their operations and carry out the work in a manner to cause the least disturbance and/or interference with the normal flow of traffic over the areas to be treated. Treated portions of the bituminous surfaces shall be kept closed and free from traffic until penetration has become complete and the area in the opinion of the Engineer, is suitable for traffic. Suitable methods such as pennants, barricades, flagmen, pilot cars, etc., shall be used to protect the uncured surface from all types of traffic. Any damage to the uncured surface will be the responsibility of the Contractor. The Engineer shall give final approval as to the method used. If damage occurs where suitable means have been made to protect the uncured surface, violators will be prosecuted and the Contractor will be reimbursed for the amount of damages.

Residents affected by the work shall be notified by the Contractor in writing, the day before the work is to be done.

10. METHOD OF MEASUREMENT

Construction sealing with rejuvenating agent will be measured by the square yard as provided for in the Contract Documents.

E. GEOTECHNICAL SPECIFICATIONS

THERE ARE NO GEOTECHNICAL SPECIFICATIONS FOR THE CITY OF DUBLIN, 2015 SHARED – USE PATH MAINTENANCE PROJECT.

F. STANDARD DRAWINGS

City of Dublin
ENGINEERING

May 1, 2014

STANDARD CONSTRUCTION DRAWINGS

Paul A. Hammersmith, P.E.

Director of Engineering / City Engineer

City of Dublin
ENGINEERING

STANDARD CONSTRUCTION DRAWINGS

NUMBER	TITLE	PGS	DATE
	MD - MISCELLANEOUS DETAILS		
MD-01	PLAN SIGNATURES EXAMPLE	1	5/1/2014
MD-02	RESIDENTIAL DRIVEWAY SLOPE	1	5/1/2014
MD-03	MONUMENT BOX DETAIL	1	5/1/2014
MD-04	PLAT SIGNATURE EXAMPLE	2	5/1/2014
MD-05	RESIDENTIAL ROOF DRAIN CONNECTION	1	5/1/2014
	PD - PEDESTRIAN DETAILS		
PD-01	TYPICAL LOCATION PLAN FOR SIDEWALK CURB RAMPS	1	5/1/2014
PD-02	CURB RAMP GENERAL NOTES	2	5/1/2014
PD-03	DETECTABLE WARNINGS	1	5/1/2014
PD-04	CURB RAMP TYPE A DIAGONAL IN TREE LAWN	1	5/1/2014
PD-05	CURB RAMP TYPE B DIAGONAL WITH FLARES	1	5/1/2014
PD-06	CURB RAMP TYPE C IN TREE LAWN	1	5/1/2014
PD-07	CURB RAMP TYPE D OBSTRUCTED ONE SIDE	1	5/1/2014
PD-08	CURB RAMP TYPE E ALLEYS AND DRIVEWAYS	1	5/1/2014
PD-09	CURB RAMP TYPE F ALLEYS AND DRIVEWAYS	1	5/1/2014
PD-10	CURB RAMP TYPE G PARALLEL LANDING, 2 RAMPS	1	5/1/2014
PD-11	CURB RAMP TYPE H MEDIAN RAMP WITH LANDING	1	5/1/2014
PD-12	CURB RAMP TYPE I PERPENDICULAR AND PARALLEL	1	5/1/2014
	RD - ROADWAY		
RD-01	TYPICAL STREET SECTION	1	5/1/2014
RD-02	COMBINATION CONCRETE CURB AND GUTTER	1	5/1/2014
RD-03	TYPICAL GUTTER SECTION TRANSITIONS	1	5/1/2014
RD-04	TYPICAL PAVEMENT SECTION FOR PRIVATE STREETS	1	5/1/2014
RD-05	CONCRETE SIDEWALK AND SHARED USE PATH	1	5/1/2014
RD-06	SHARED USE PATH: STANDARD AND HEAVY DUTY	1	5/1/2014
RD-07	RESIDENTIAL AND COMMERCIAL DRIVEWAYS	9	5/1/2014
RD-08	CUL-DE-SAC: 300' - 1000'	1	5/1/2014
RD-09	CUL-DE-SAC LESS THAN 300'	1	5/1/2014
RD-10	TYPICAL STREET NAME SIGN	1	5/1/2014
RD-11	STRAIGHT 18" CONCRETE CURB	1	5/1/2014

City of Dublin
ENGINEERING

STANDARD CONSTRUCTION DRAWINGS

NUMBER	TITLE	PGS	DATE
RD-12	BRICK PAVER SIDEWALK	1	5/1/2014
RD-13	ROUNDABOUT TRUCK APRON DETAIL	1	5/1/2014
RD-14	BRICK PAVER MEDIAN DETAIL	1	5/1/2014
SA - SANITARY SEWER			
SA-01	SANITARY MANHOLE DETAILS	1	5/1/2014
SA-02	SANITARY MANHOLE LID	1	5/1/2014
SA-03	TYPICAL SANITARY RISER DETAIL	1	5/1/2014
SA-04	CONCRETE COLLAR FOR MANHOLES IN PAVEMENT	1	
SL - STREET LIGHTING			
SL-01	LUMINAIRE	2	5/1/2014
SL-02	TRANSFORMER BASE	2	5/1/2014
SL-03	LIGHT POLE	1	5/1/2014
SL-04	POLE FOUNDATION	2	5/1/2014
SL-05	TRENCHES	3	5/1/2014
SL-06	QUICK DISCONNECT	1	5/1/2014
SL-07	SAMPLE LIGHTING QUANTITIES SCHEDULE	1	5/1/2014
SL-08	STREET LIGHT LOCATION	1	5/1/2014
SL-09	DECORATIVE LUMINAIRE	3	5/1/2014
SL-10	DECORATIVE LIGHT POLE - SINGLE HEAD	1	5/1/2014
SL-11	DECORATIVE LIGHT POLE - 12' DOUBLE HEAD	1	5/1/2014
SL-12	DECORATIVE LIGHT POLE FOUNDATION	1	5/1/2014
SL-13	LIGHTING CONTROLLER	4	5/1/2014
ST - STORM SEWER			
ST-01	STONE VENEER FOR CONCRETE STRUCTURES	1	5/1/2014
ST-02	SAFETY GRATE	1	5/1/2014
ST-03	STORM SEWER MANHOLE	1	5/1/2014
ST-04	DRAINS TO RIVER CURB INLET	1	5/1/2014
ST-05	ROCK CHANNEL PROTECTION DETAIL	1	5/1/2014
ST-06	STORM SEWER WITH "O" RINGS RUBBER GASKET JOINTS	1	5/1/2014
WA - WATER			
WA-01	FIRE HYDRANT	1	5/1/2014

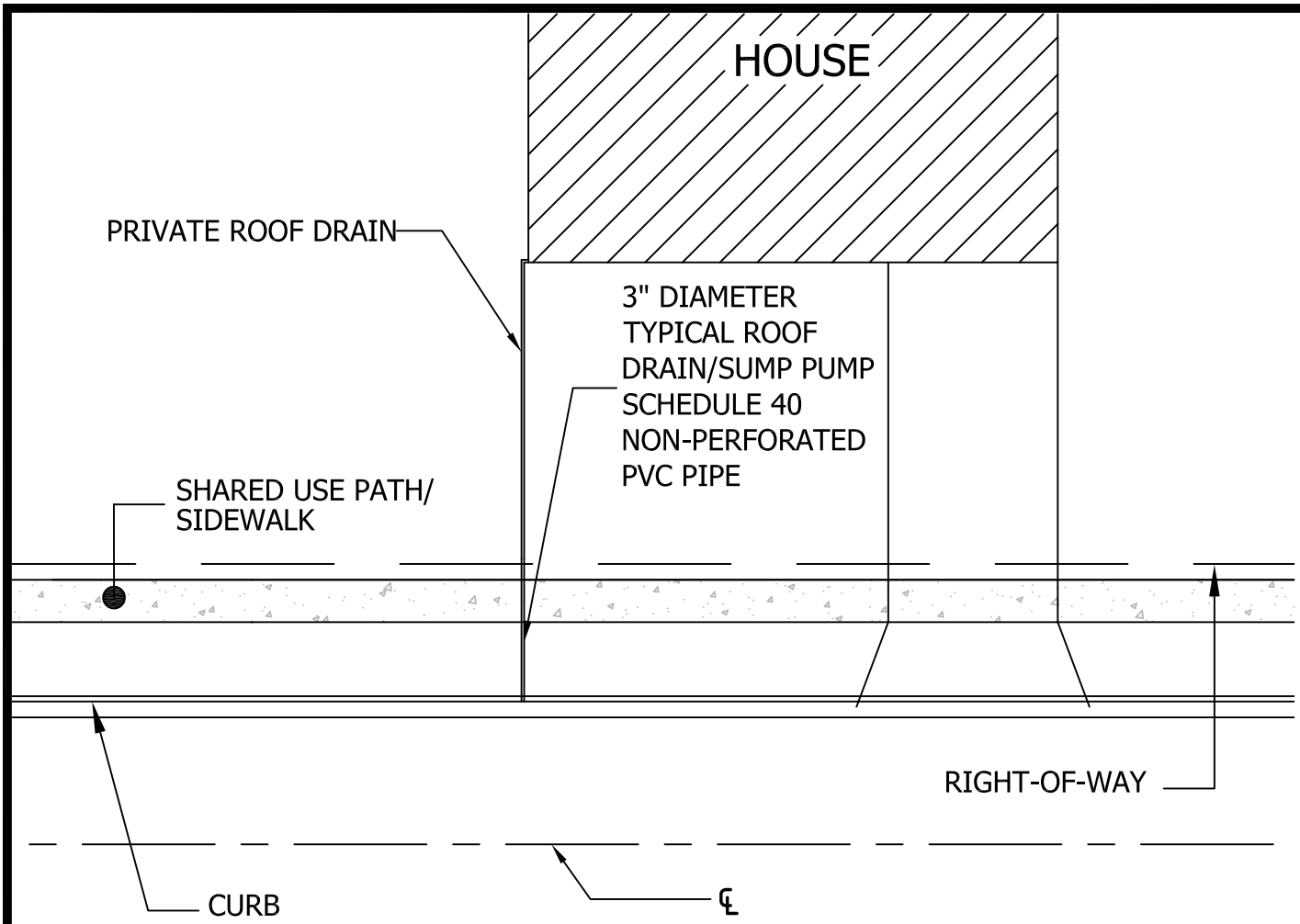

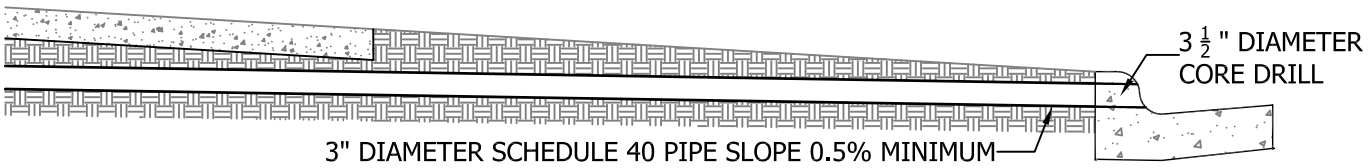

CURB CONNECTION DETAIL

NOTES:

1. ALL SUMP PUMP/DOWNSPOUT DRAIN TILE SHALL BE SCHEDULE 40 SOLID WALL (NON-PERFORATED) PIPE WITHIN THE PUBLIC RIGHT-OF-WAY (R/W).
2. TYPICAL RESIDENTIAL TYPE CONNECTIONS WILL BE 3" IN DIAMETER.
3. THE CONNECTION AT THE CURB SHALL BE CORE DRILLED.
4. THE PIPE SHALL EXTEND AT LEAST TWO FEET BEYOND THE SIDEWALK OR SHARED USE PATH LOCATION.
5. PIPE SLOPE TO BE 0.5% MINIMUM TOWARDS STREET.
6. ROOF DRAIN/SUMP PUMP PIPE SHALL BE PRIVATELY OWNED AND MAINTAINED, INCLUDING IN THE R/W.

Date: 09/16/2014

City of Dublin
ENGINEERING

STANDARD DRAWING

RESIDENTIAL ROOF DRAIN CONNECTION

SHEET 1 OF 1

DRAWING NO. ***MD-05***

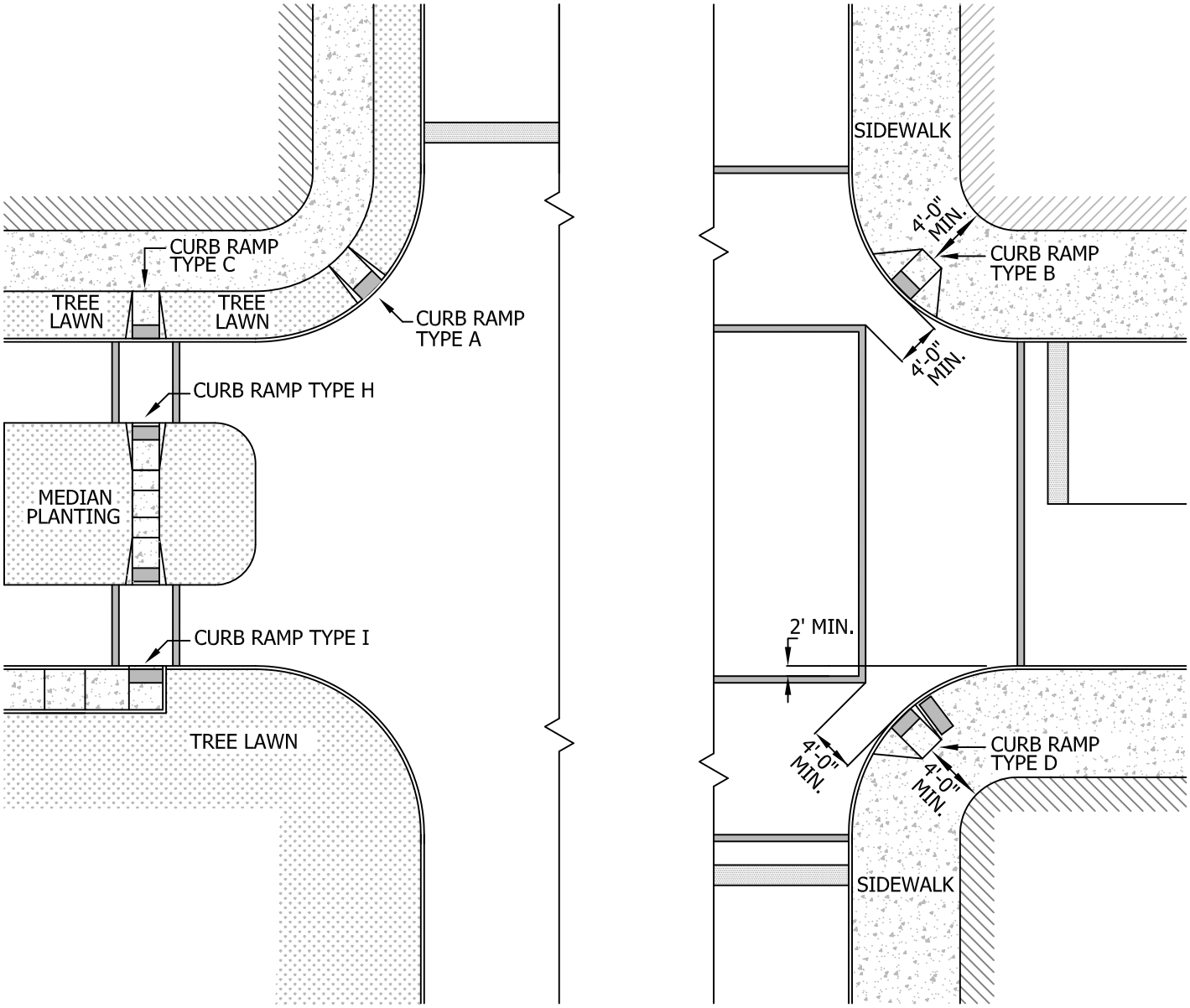

Date: 05/01/2014

City of Dublin
ENGINEERING

STANDARD DRAWING

TYPICAL LOCATION PLAN FOR SIDEWALK CURB RAMPS

SHEET 1 OF 1

DRAWING NO. **PD-01**

GENERAL NOTES, SIDEWALK CURB RAMPS

1. CURB RAMP COMPONENTS ASSEMBLY - THE CURB RAMP INCLUDES THE RAMPS, FLARED SIDES, LANDINGS AND ROLLED EDGES.

2. CURB RAMP TYPE - CURB RAMPS SHALL BE SPECIFIED BY THE APPROPRIATE TYPE AND SHALL BE PERPENDICULAR TO THE CURB EXCEPT TYPES E & F.

   TYPE A - DIAGONAL RAMP WITH FLARES IN TREE LAWN.
   TYPE B - DIAGONAL RAMP WITH FLARES.
   TYPE C - PERPENDICULAR RAMP IN TREE LAWN.
   TYPE D - PERPENDICULAR RAMP OBSTRUCTED ON ONE SIDE (WITH PRIOR WRITTEN CITY APPROVAL ONLY)
   TYPE E - RAMP WITH RECESSED LOWER LANDING FOR ALLEYS AND DRIVEWAYS (WITH TREE LAWN).
   TYPE F - RAMP WITH RECESSED LOWER LANDING FOR ALLEYS AND DRIVEWAYS (NO TREE LAWN).
   TYPE G - PARALLEL (OFF-STREET LANDING) WITH 2 TRANSITION RAMPS (WITH PRIOR WRITTEN CITY APPROVAL ONLY).
   TYPE H - MEDIAN RAMP WITH CENTER LANDING.
   TYPE I - COMBINED PERPENDICULAR AND PARALLEL RAMP ONE DIRECTION.

3. RAMP RUNNING SLOPE - THE RAMP RUNNING SLOPE SHALL BE 5% (1:20) TO 7.7% (1:13).

4. RAMP CROSS SLOPE - THE MAXIMUM CROSS SLOPE SHALL BE 1.56% (1:64, 3/16 INCH PER FOOT).

5. PERPENDICULAR RAMP WIDTH - THE MINIMUM WIDTH OF A SIDEWALK RAMP SHALL BE 4-FEET AND OF A BIKE PATH RAMP SHALL BE 8-FEET. THE WIDTH MAY BE REDUCED TO A MINIMUM OF 3-FEET WITH PRIOR WRITTEN CITY APPROVAL IF CLEARANCE RESTRICTIONS EXIST.

6. PARALLEL RAMP WIDTH - TYPE H RAMP SHALL BE A MINIMUM OF 4-FEET BY 5-FEET & 5-FEET BY 5-FEET RESPECTIVELY, PER STANDARD DRAWINGS.

7. ALL JOINTS BETWEEN NEW AND EXISTING MATERIALS SHALL BE FLUSH.

8. FLARES - THE LENGTH OF THE FLARE AT THE FACE OF CURB SHALL BE A MAXIMUM OF 10% OR 10 TIMES THE CURB HEIGHT, WHICHEVER IS LESS.

9. LANDINGS - LANDINGS SHALL BE A MINIMUM OF 4-FEET BY 4-FEET WITH A 1.56% (1:64) CROSS SLOPE FOR ALL CURB RAMP TYPES EXCEPT PARALLEL CURB RAMPS. OFF STREET LANDINGS FOR PARALLEL CURB RAMPS SHALL BE A MINIMUM OF 4-FEET BY 5-FEET AS INDICATED IN THE STANDARD DRAWINGS. LANDINGS ARE REQUIRED AS FOLLOWS:

   A. TOP LANDING - CURB RAMP TYPES A, B, C AND G SHALL HAVE LANDINGS AT THE TOP OF THE RAMP.

   B. LOWER RECESSED LANDING - CURB RAMP TYPE E AND F SHALL HAVE A RECESSED LANDING AT THE BOTTOM OF THE RAMP WHERE IT INTERSECTS THE CURB LINE.

   C. LANDING AT INTERSECTING SIDEWALKS - WHEREVER SIDEWALKS INTERSECT THERE SHALL BE A LANDING MEETING THE ABOVE REQUIREMENTS.

(GENERAL NOTES CONTINUED ON SHEET 2)

GENERAL NOTES, SIDEWALK CURB RAMPS (CONTINUED)

10. STREET COUNTER SLOPE - THE COUNTER SLOPE AT THE BASE OF THE RAMP SHALL BE A MAXIMUM OF 1:20 OR 5% FOR A MINIMUM OF 2-FEET.

11. MAXIMUM DIFFERENTIAL BETWEEN RAMP RUNNING SLOPE AND GUTTER PAN SHALL BE 13 %, THE PREFERRED DIFFERENTIAL IS 11%..

12. SURFACES - RAMP AND FLARE SURFACES MUST BE STABLE AND SLIP RESISTANT. RAMPS SHALL BE MEDIUM BROOMED TRANSVERSE TO THE DIRECTION OF TRAVEL. GRATINGS, VALVE BOXES, AND UTILITY BOXES SHALL NOT BE LOCATED IN THE RAMP, LANDING, OR TRANSITION AREAS.

13. DETECTABLE WARNINGS SHALL BE INSTALLED IN ACCORDANCE WITH CITY OF DUBLIN STANDARD DRAWING PD-03. DETCTABLE WARNINGS SHALL BE PROVIDED WHEREVER A CURB RAMP CROSSES A PUBLIC VEHICULAR WAY.

14. THE PEDESTRIAN WALKWAY WITHIN THE STREET PAVEMENT, AT LEAST 7-FEET WIDE, BETWEEN OPPOSING RAMPS SHALL HAVE A CROSS-SLOPE (THE LONGITUDINAL STREET SLOPE) OF NO GREATER THAN 2%. VERTICAL STREET CURVES SHALL BE INSTALLED AS NEEDED.

15. GRAVEL BEDDING SHALL HAVE A MINIMUM DEPTH OF 4 INCHES AND SHOULD NOT EXCEED A DEPTH OF 6 INCHES.

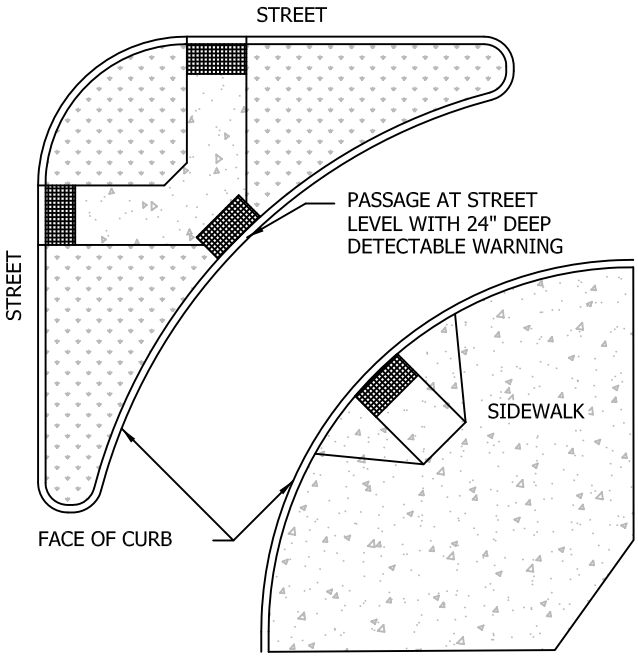

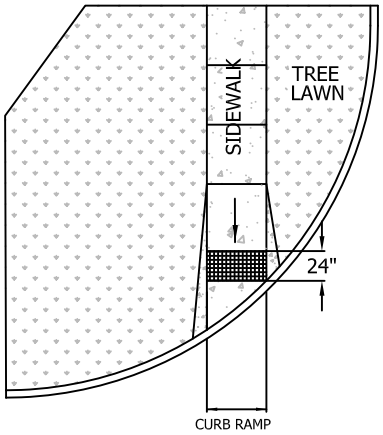

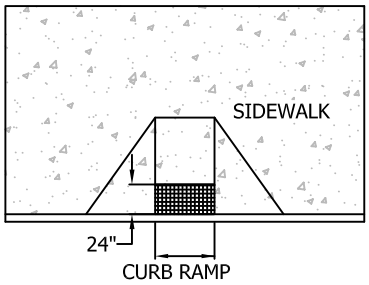

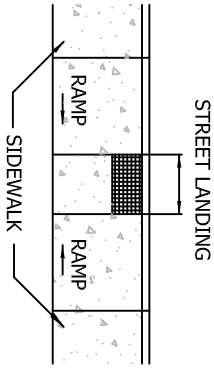

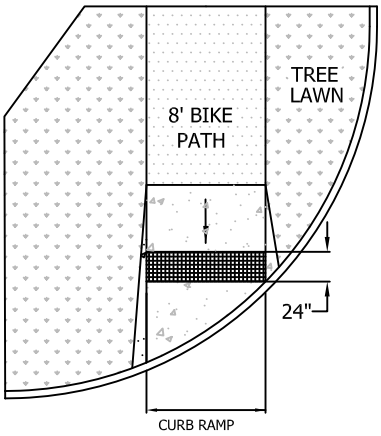

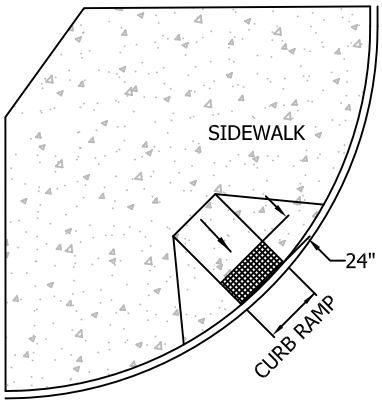

NOTES:

1. DETECTABLE WARNINGS SHALL BE PROVIDED WHEREVER A CURB RAMP CROSSES A VEHICULAR WAY EXCLUDING UNSIGNALIZED DRIVEWAY CROSSINGS.

2. DETECTABLE WARNINGS SHALL BE PROVIDED 24 INCHES IN THE DIRECTION OF TRAVEL AND EXTEND THE FULL WIDTH OF THE CURB RAMP OR FLUSH SURFACE. THE DETECTABLE WARNING SHALL BE LOCATED ADJACENT TO THE CURB LINE.

3. DETECTABLE WARNINGS SHALL BE PLACED 2" BEHIND THE BACK OF CURB.

4. DETECTABLE WARNINGS SHALL BE ADA SOLUTIONS, CAST IN PLACE REPLACEABLE TILE OR APPROVED EQUAL. BRICK RED IN COLOR FOR USE ON CONCRETE RAMPS AND BLACK IN COLOR FOR USE ON BRICK PAVER RAMPS.

Date: 05/01/2014

City of Dublin
ENGINEERING

STANDARD DRAWING

DETECTABLE WARNINGS

SHEET 1 OF 1

DRAWING NO. **PD-03**

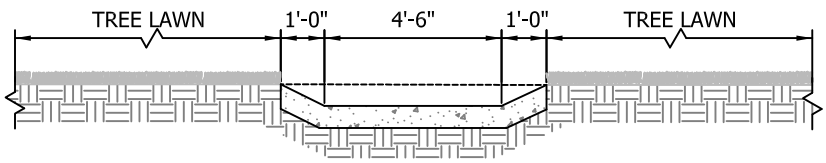

SECTION B-B

NOTE:
SEE STANDARD DRAWING PD-03 FOR DETECTABLE WARNINGS DETAILS

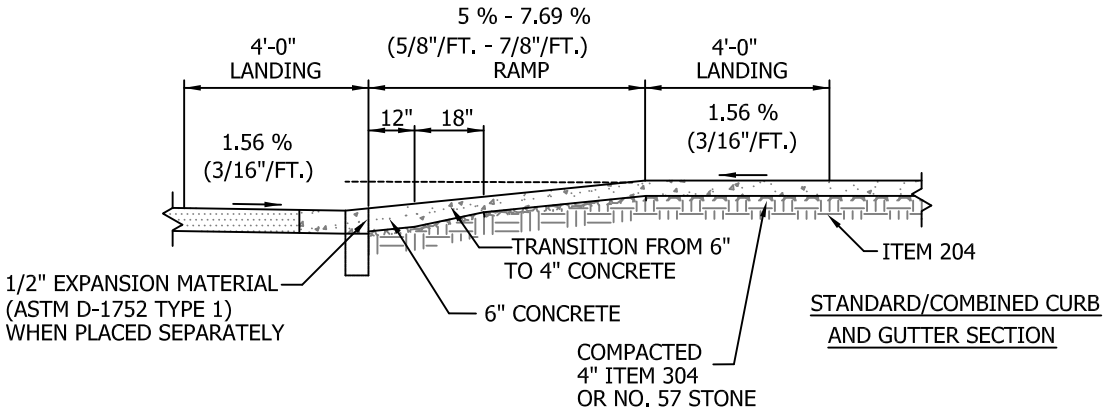

STANDARD/COMBINED CURB AND GUTTER SECTION

SECTION A-A

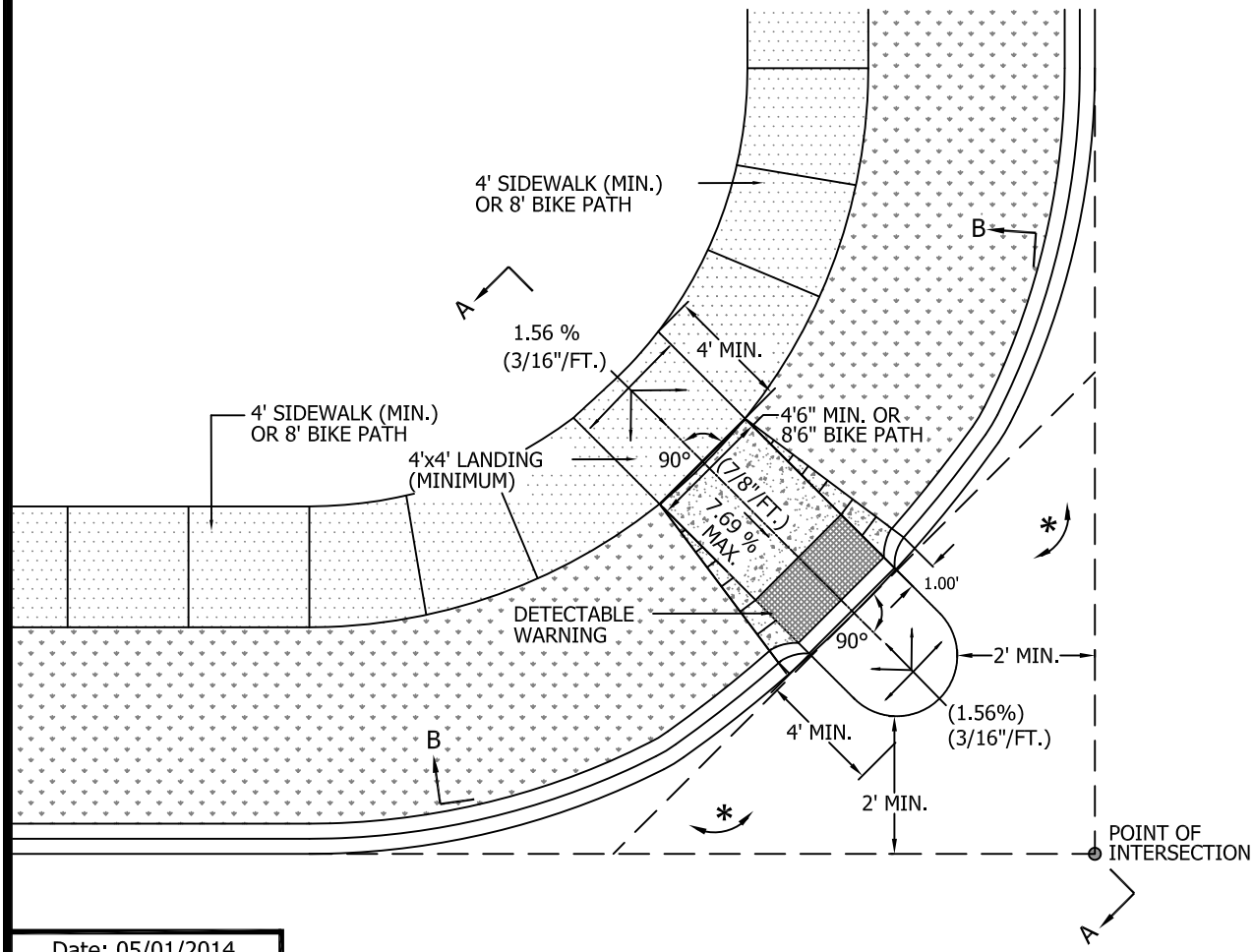

Date: 05/01/2014

City of Dublin
ENGINEERING

STANDARD DRAWING

CURB RAMP TYPE A DIAGONAL IN TREE LAWN

SHEET 1 OF 1

DRAWING NO. **PD-04**

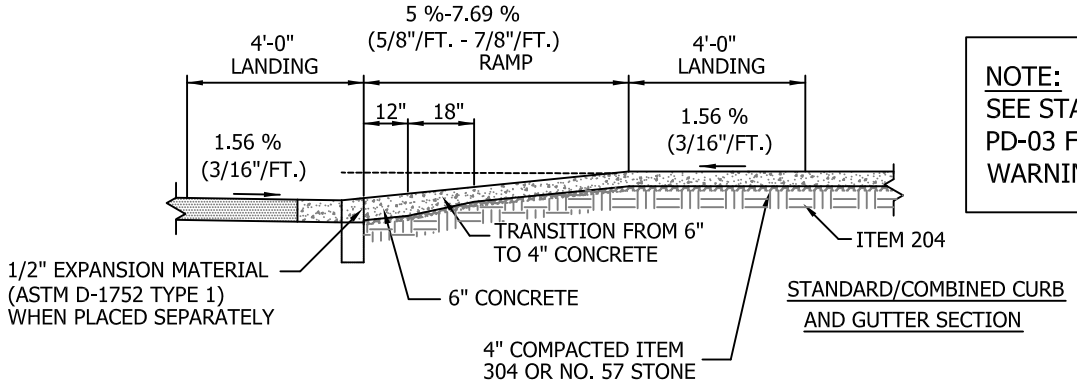

STANDARD/COMBINED CURB AND GUTTER SECTION

SECTION A-A

NOTE:
SEE STANDARD DRAWING PD-03 FOR DETECTABLE WARNINGS DETAILS

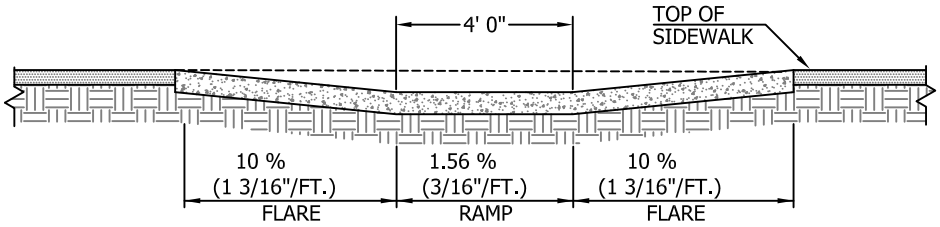

SECTION B-B

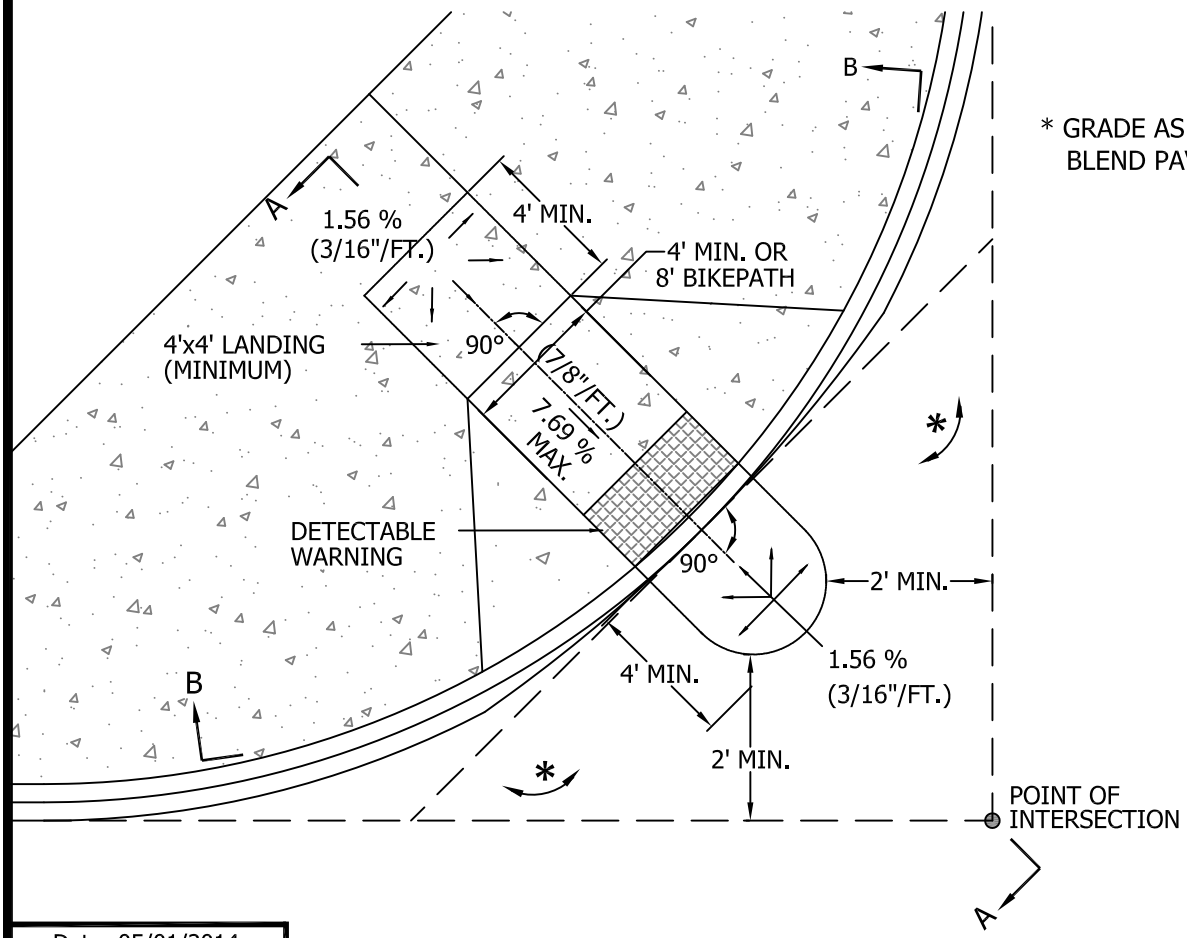

* GRADE AS REQUIRED TO BLEND PAVEMENT GRADES

Date: 05/01/2014

City of Dublin
ENGINEERING

STANDARD DRAWING

CURB RAMP TYPE B DIAGONAL WITH FLARES

SHEET 1 OF 1

DRAWING NO. **PD-05**

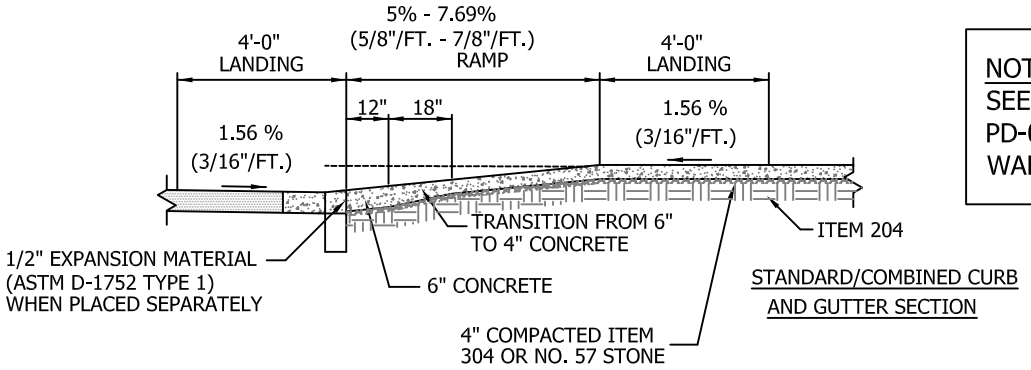

SECTION A-A

NOTE:
SEE STANDARD DRAWING PD-03 FOR DETECTABLE WARNINGS DETAILS

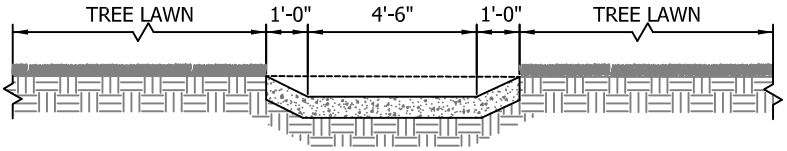

SECTION B-B

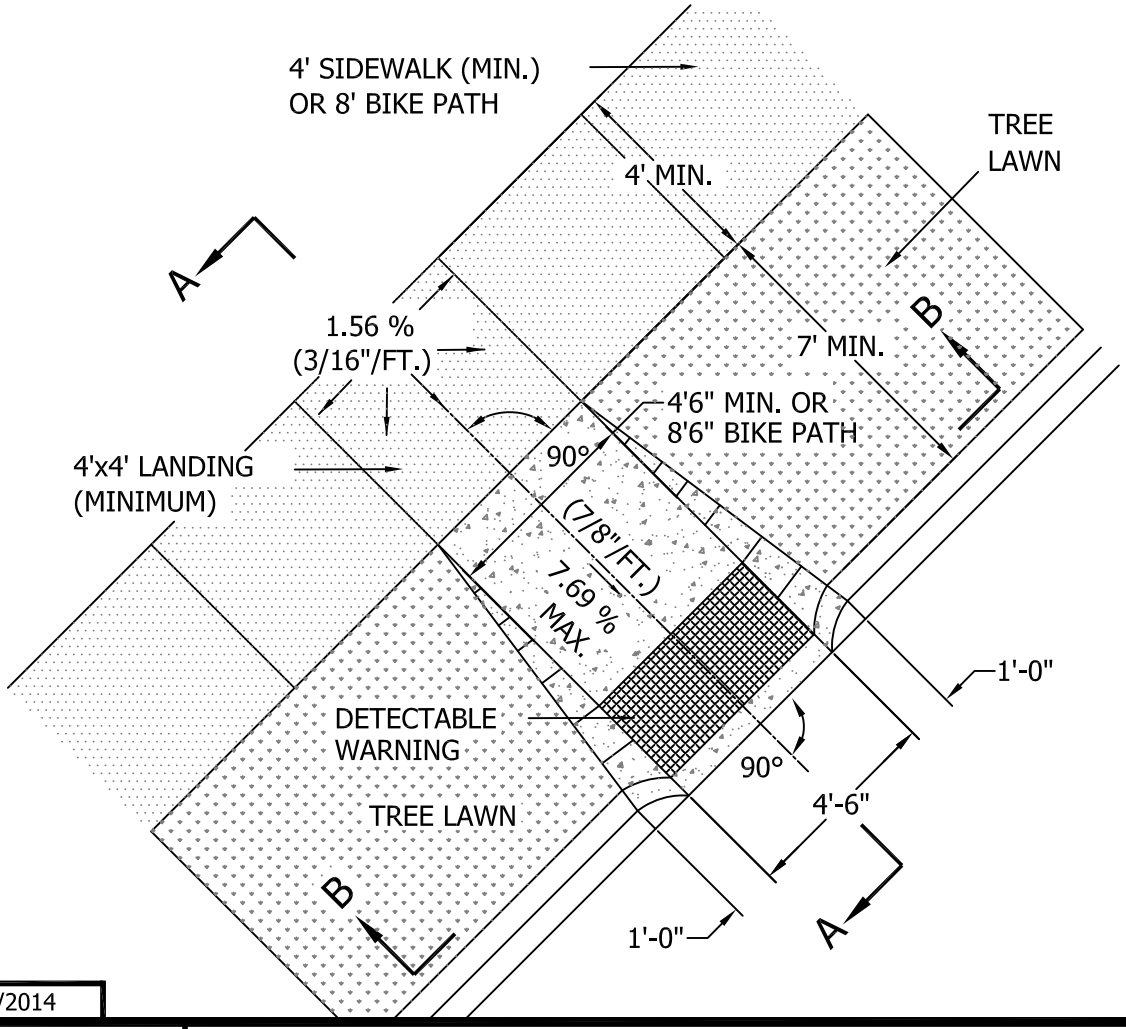

Date: 05/01/2014

City of Dublin
ENGINEERING

STANDARD DRAWING

CURB RAMP TYPE C IN TREE LAWN

SHEET 1 OF 1

DRAWING NO. **PD-06**

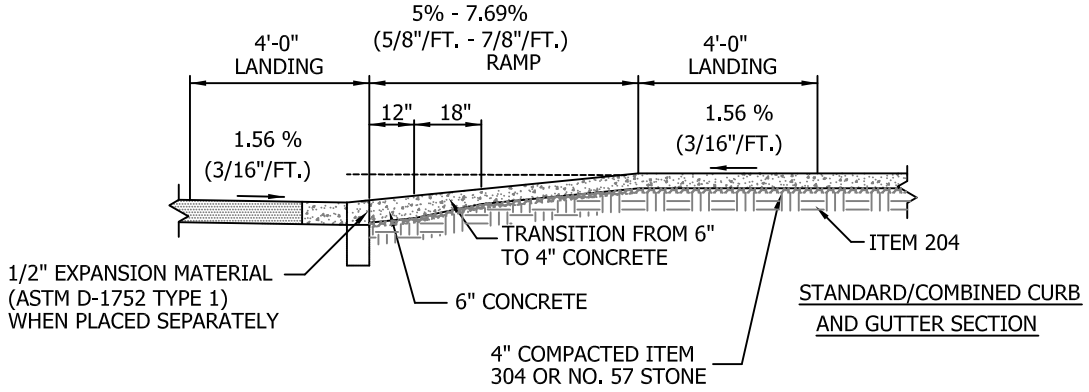

SECTION A-A

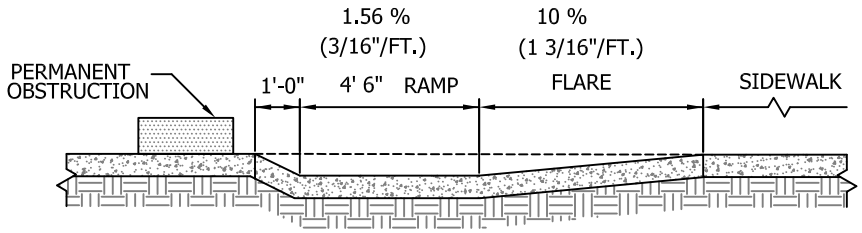

SECTION B-B

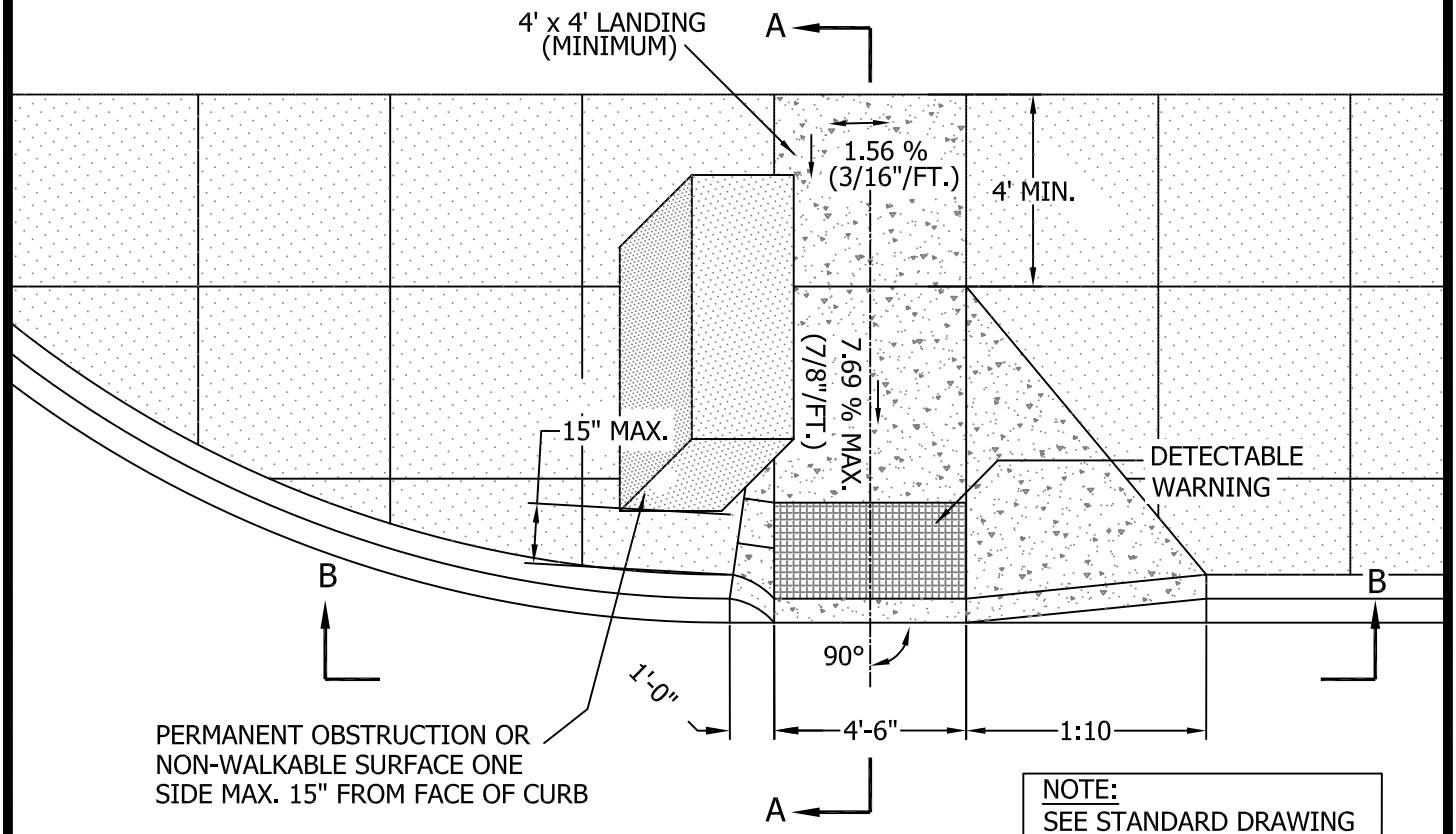

NOTE:
SEE STANDARD DRAWING PD-03 FOR DETECTABLE WARNINGS DETAILS

Date: 05/01/2014

City of Dublin
ENGINEERING

STANDARD DRAWING

CURB RAMP TYPE D OBSTRUCTED ONE SIDE

SHEET 1 OF 1

DRAWING NO. **PD-07**

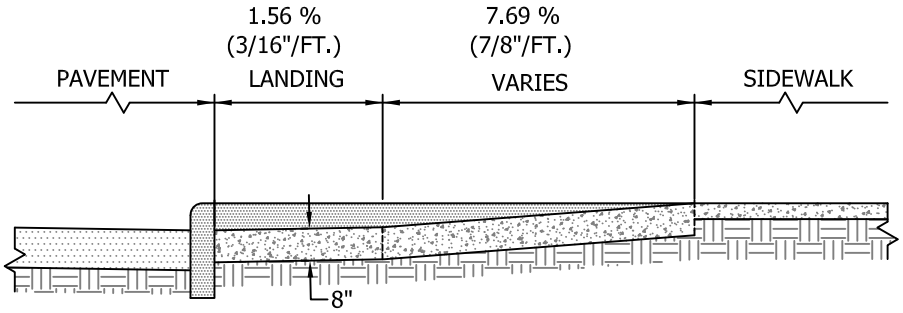

SECTION A-A

NOTE:
SEE STANDARD DRAWING PD-03 FOR DETECTABLE WARNINGS DETAILS

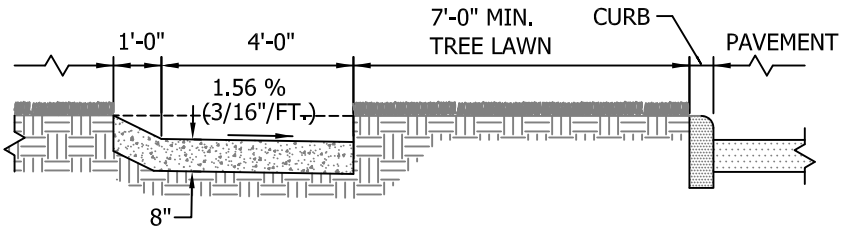

SECTION B-B

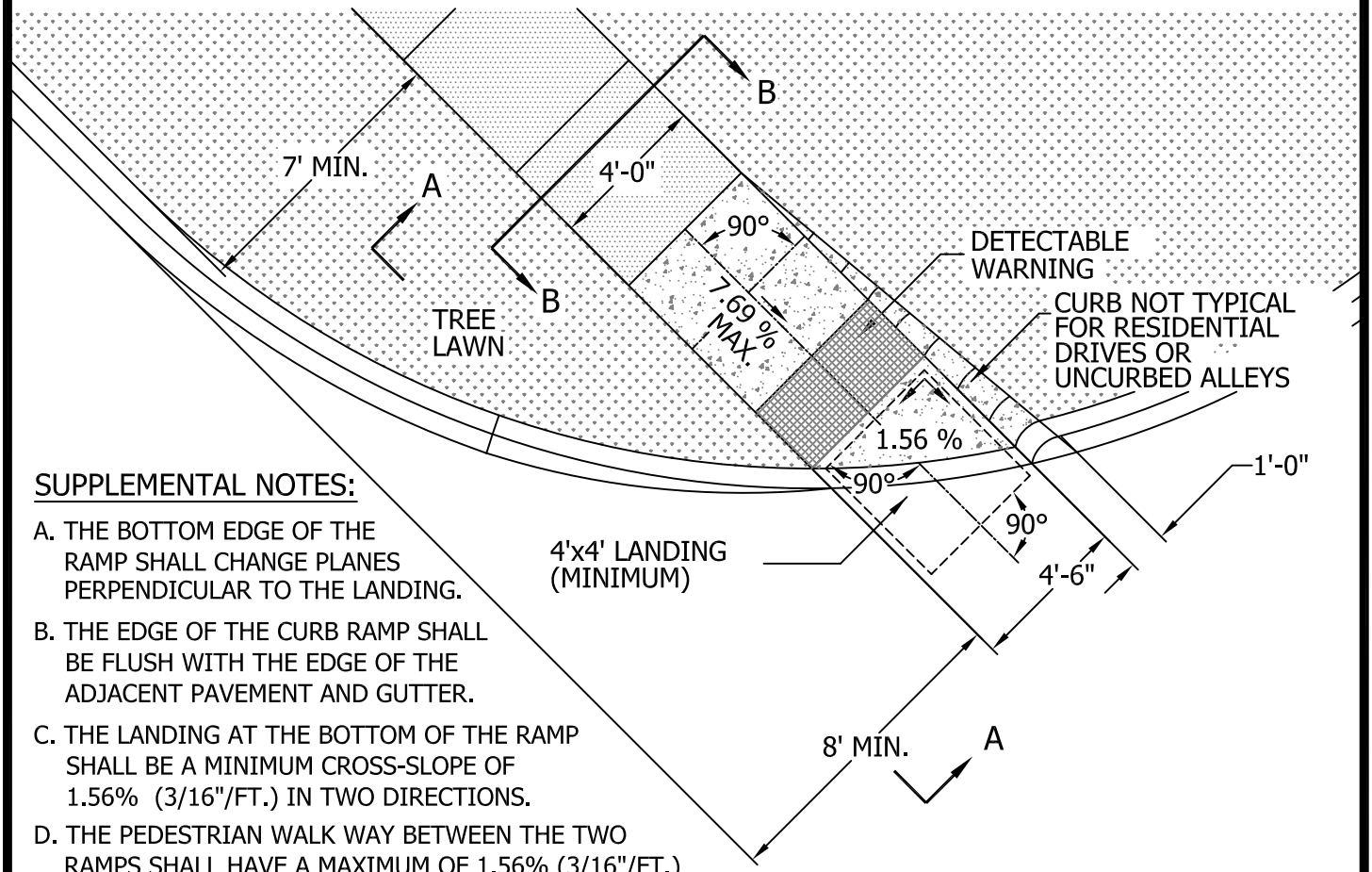

SUPPLEMENTAL NOTES:

A. THE BOTTOM EDGE OF THE RAMP SHALL CHANGE PLANES PERPENDICULAR TO THE LANDING.

B. THE EDGE OF THE CURB RAMP SHALL BE FLUSH WITH THE EDGE OF THE ADJACENT PAVEMENT AND GUTTER.

C. THE LANDING AT THE BOTTOM OF THE RAMP SHALL BE A MINIMUM CROSS-SLOPE OF 1.56% (3/16"/FT.) IN TWO DIRECTIONS.

D. THE PEDESTRIAN WALK WAY BETWEEN THE TWO RAMPS SHALL HAVE A MAXIMUM OF 1.56% (3/16"/FT.) CROSS-SLOPE WITH A 5% MAXIMUM RUNNING SLOPE (5/8"/FT.).

Date: 05/01/2014

City of Dublin
ENGINEERING

STANDARD DRAWING

CURB RAMP TYPE E ALLEYS AND DRIVEWAYS

SHEET 1 OF 1

DRAWING NO. ***PD-08***

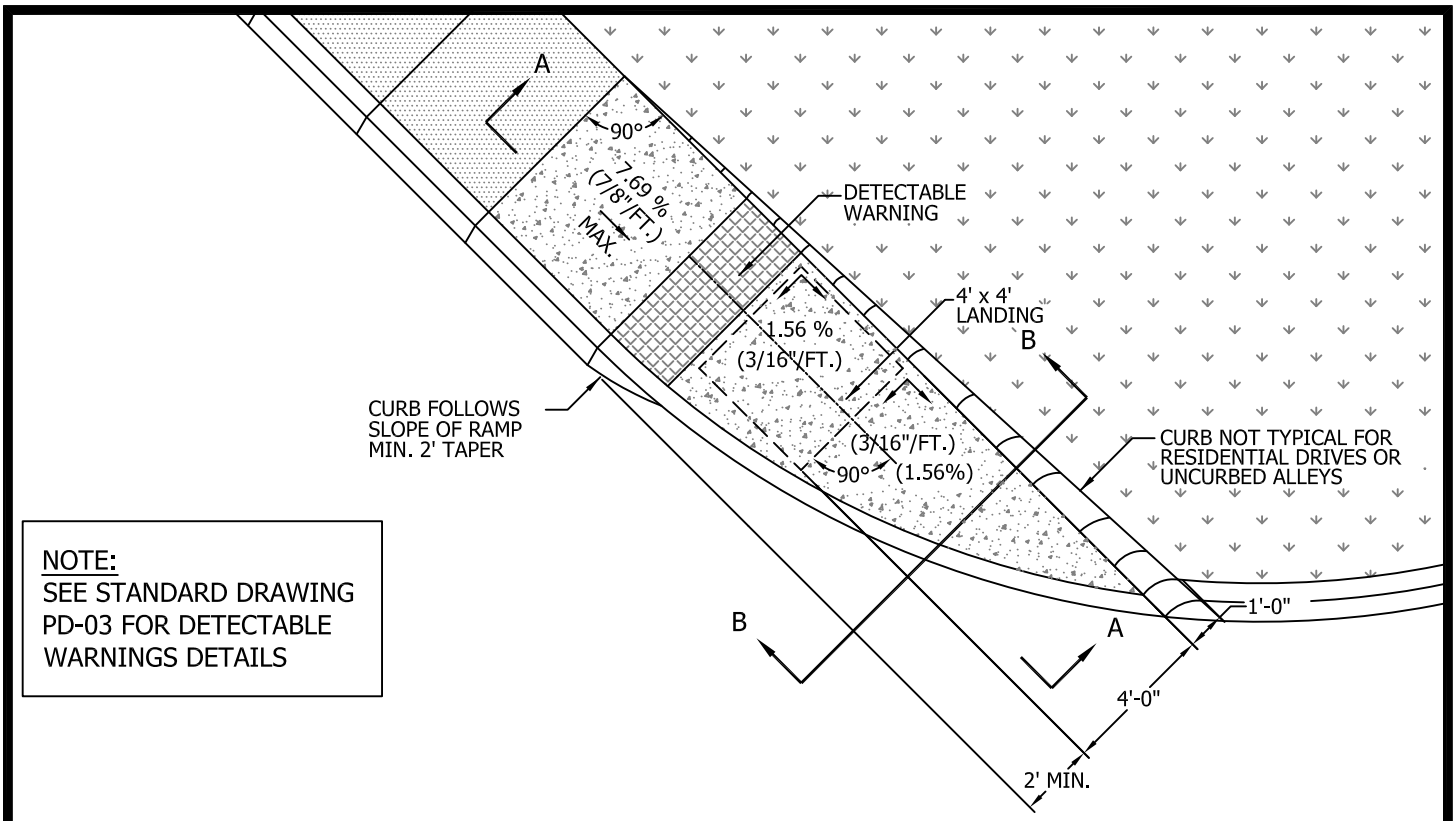

NOTE:
SEE STANDARD DRAWING PD-03 FOR DETECTABLE WARNINGS DETAILS

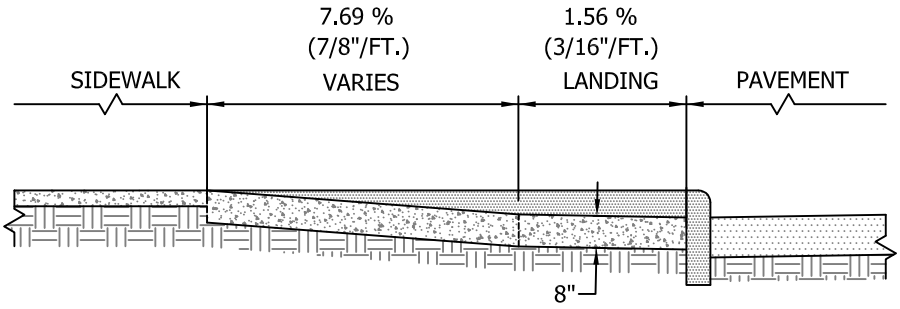

SECTION A-A

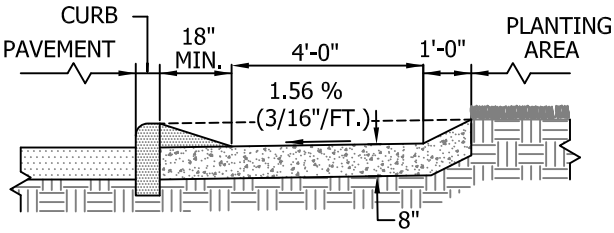

SECTION B-B

SUPPLEMENTAL NOTES:

A. THE BOTTOM EDGE OF THE RAMP SHALL CHANGE PLANES PERPENDICULAR TO THE LANDING.

B. THE EDGE OF THE CURB SHALL BE FLUSH WITH THE EDGE OF THE ADJACENT PAVEMENT AND GUTTER.

C. THE LANDING AT THE BOTTOM OF THE RAMP SHALL BE 4'X4' WITH A MAXIMUM CROSS SLOPE OF 1.56 % (3/16"/FT) IN TWO DIRECTIONS.

D. THE PEDESTRIAN WALK WAY BETWEEN THE TWO RAMPS SHALL HAVE A MAXIMUM OF 1.56 % (3/16"/FT.) CROSS - SLOPE WITH A 5 % (5/8"/FT.) MAXIMUM RUNNING SLOPE.

Date: 05/01/2014

City of Dublin
ENGINEERING

STANDARD DRAWING

CURB RAMP TYPE F ALLEY AND DRIVEWAYS

SHEET 1 OF 1

DRAWING NO. **PD-09**

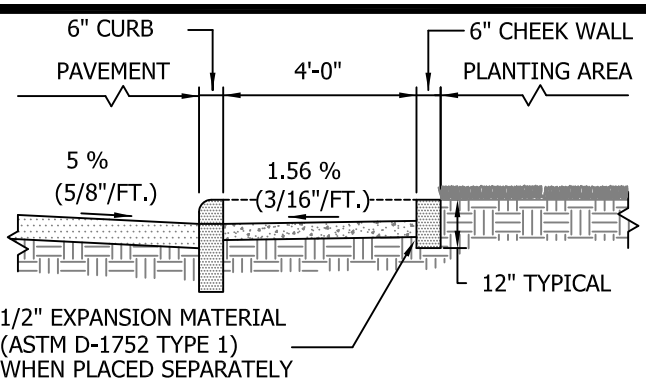

SECTION A-A

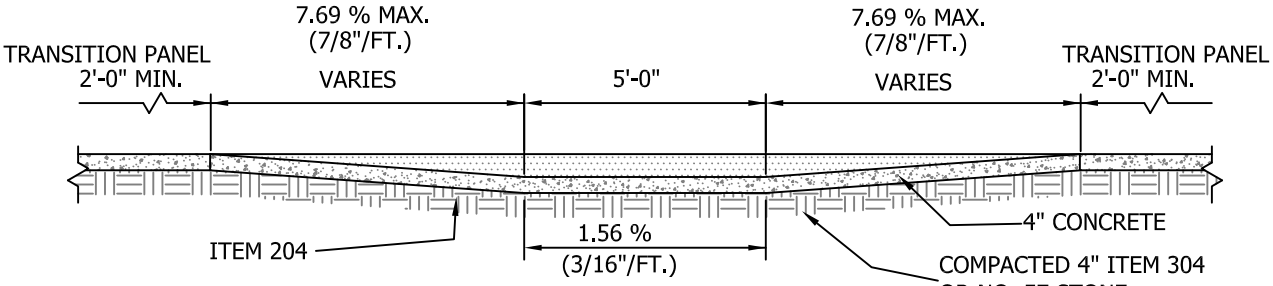

SECTION B-B

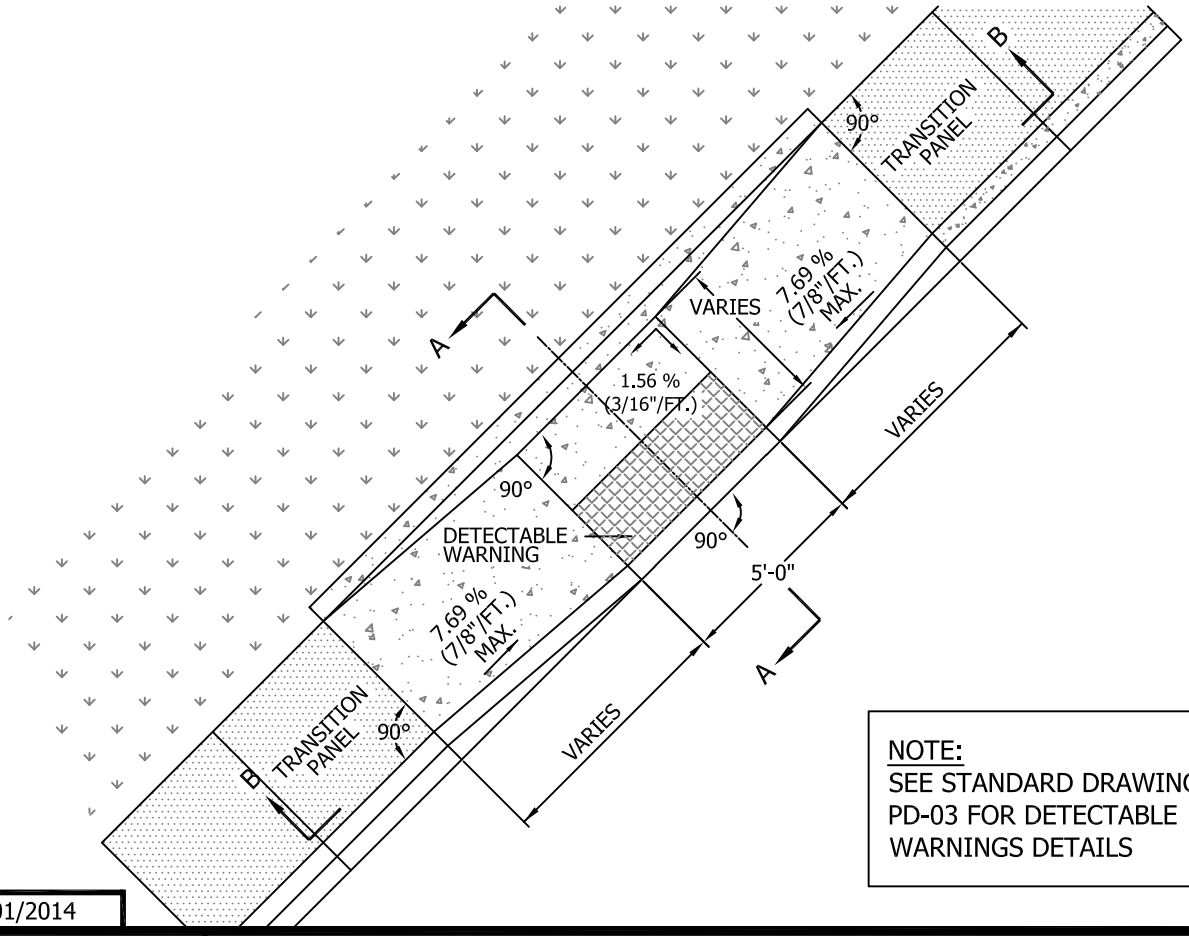

NOTE:
SEE STANDARD DRAWING PD-03 FOR DETECTABLE WARNINGS DETAILS

Date: 05/01/2014

City of Dublin
ENGINEERING

STANDARD DRAWING

CURB RAMP TYPE G PARALLEL LANDING, 2 RAMPS

SHEET 1 OF 1

DRAWING NO. **PD-10**

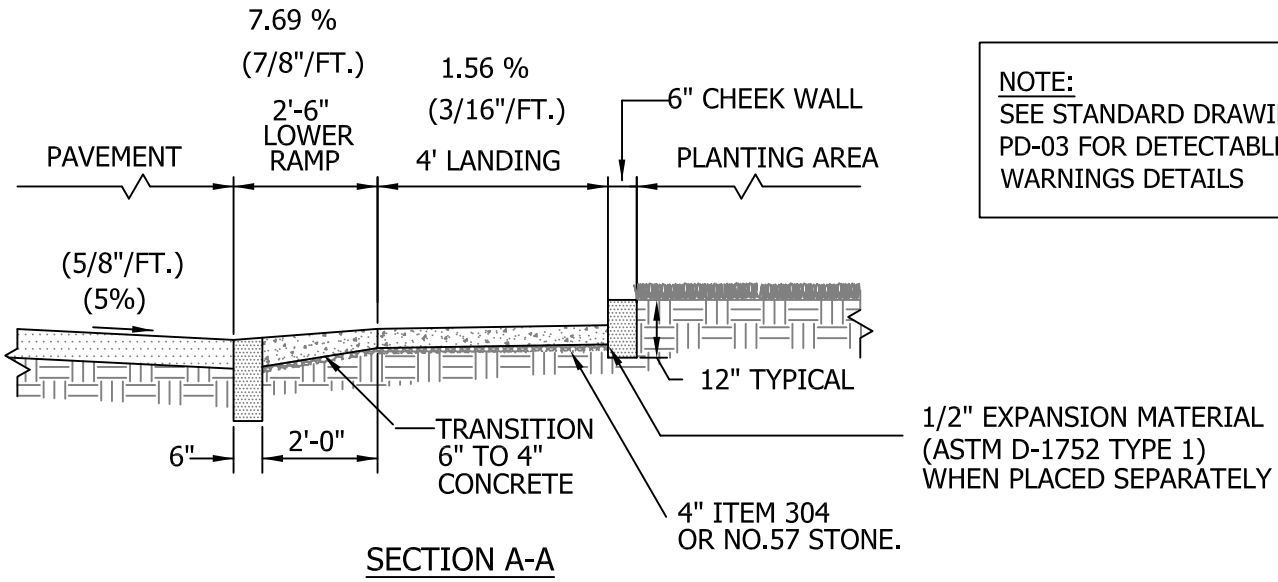

SECTION A-A

NOTE:
SEE STANDARD DRAWING PD-03 FOR DETECTABLE WARNINGS DETAILS

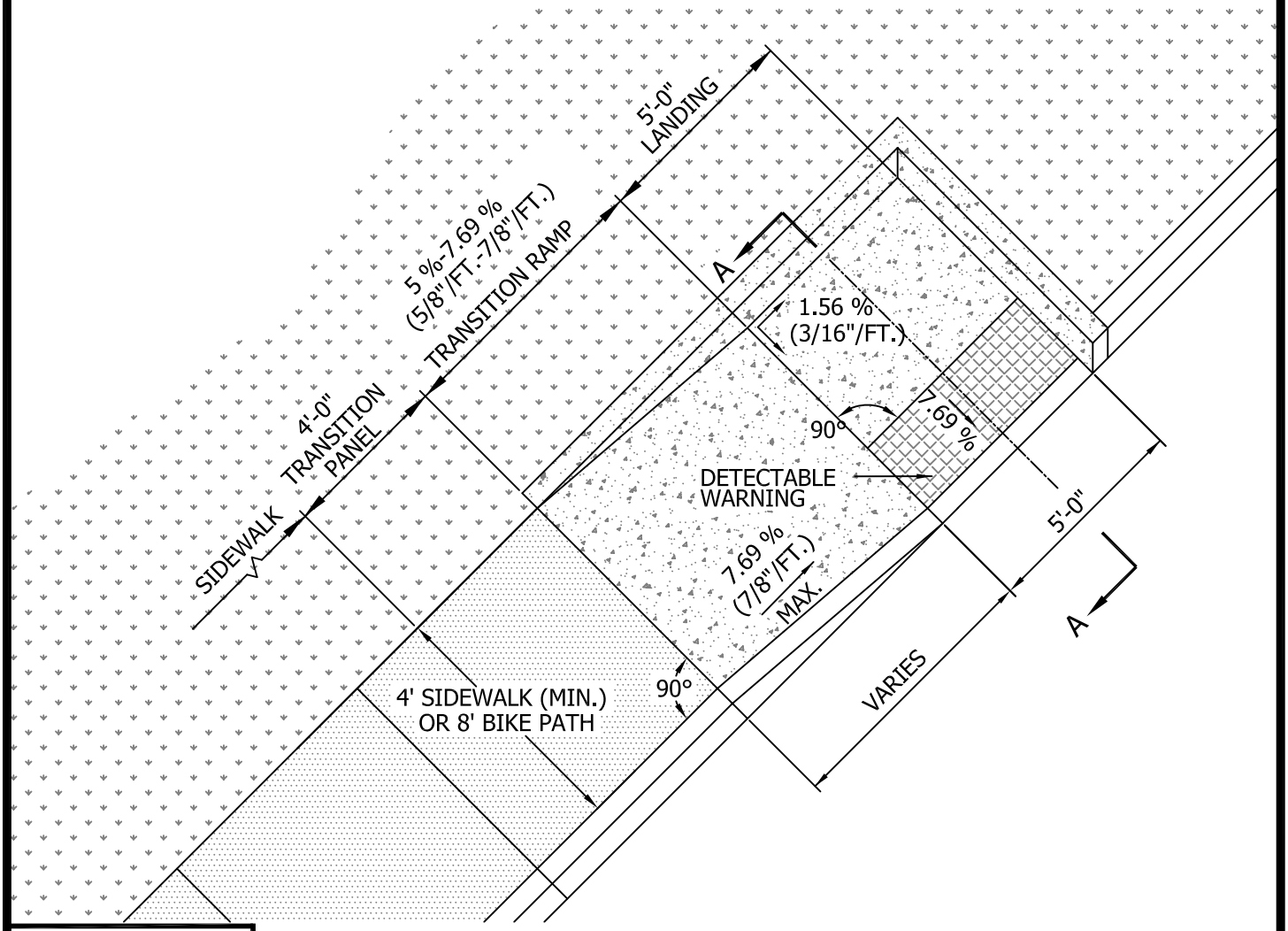

Date: 05/01/2014

City of Dublin
ENGINEERING

STANDARD DRAWING

CURB RAMP TYPE I PERPENDICULAR & PARALLEL

SHEET 1 OF 1

DRAWING NO. **PD-12**

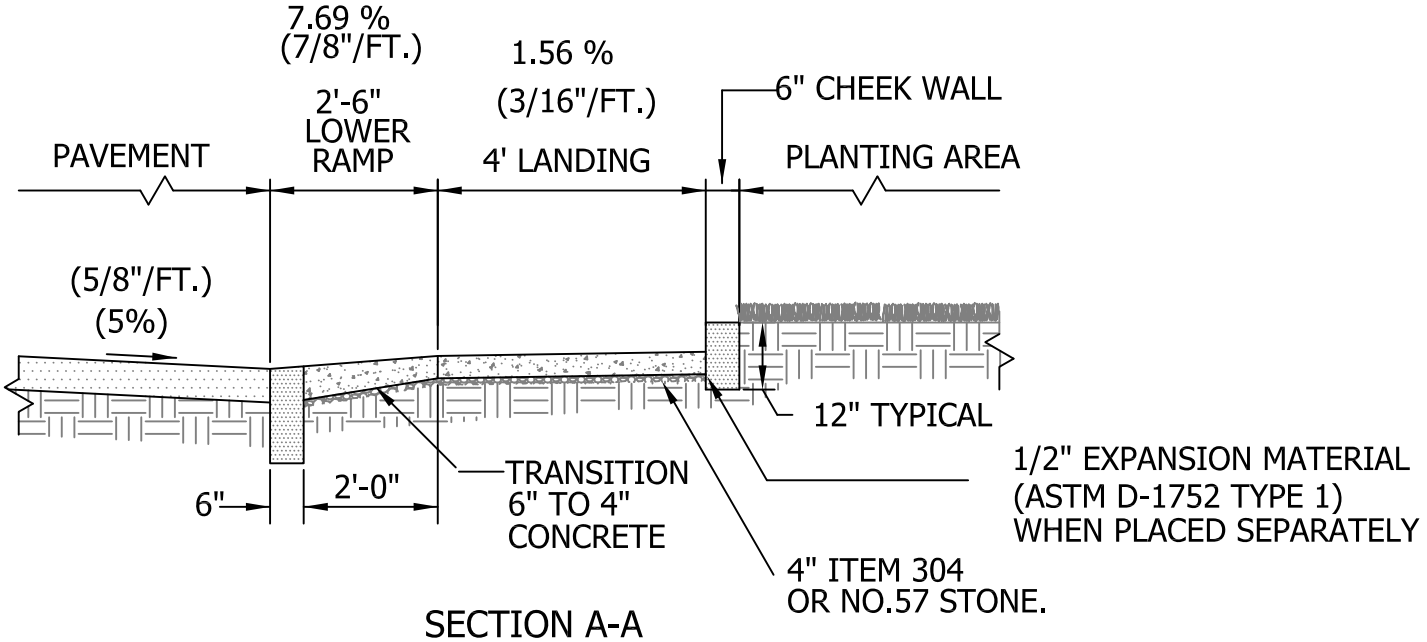

SECTION A-A

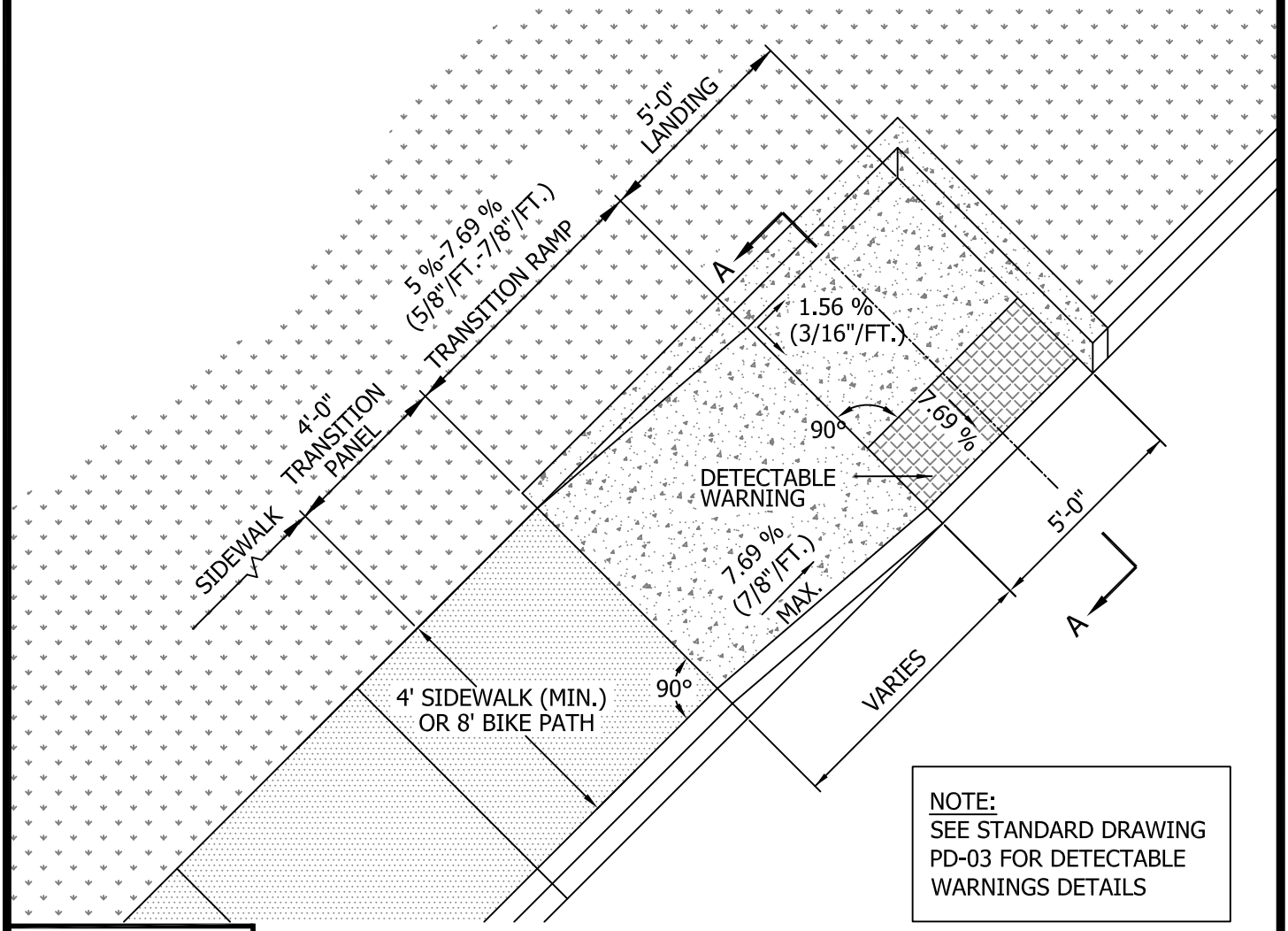

NOTE:
SEE STANDARD DRAWING PD-03 FOR DETECTABLE WARNINGS DETAILS

Date: 05/01/2014

City of Dublin
ENGINEERING

STANDARD DRAWING

CURB RAMP TYPE I PERPENDICULAR & PARALLEL

SHEET 1 OF 1

DRAWING NO. **PD-12**

NOTE: SEE RD-02 FOR CURB & GUTTER DETAIL

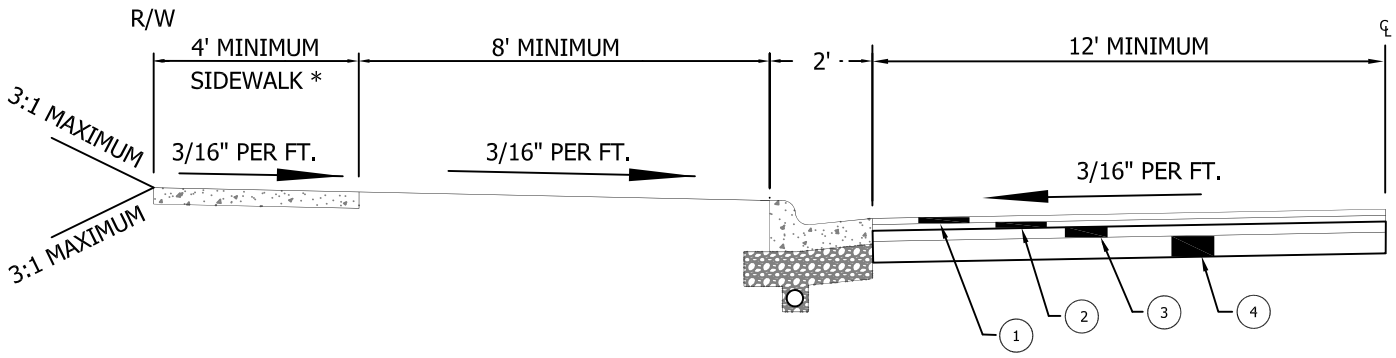

* 5'-0" SIDEWALK (WHERE REQUIRED)
8'-0" BIKE PATH (WHERE REQUIRED)

MINOR AND LOCAL STREETS	(MINIMUM PAVEMENT DEPTH*)	ALTERNATIVE ***
(1) ASPHALT CONCRETE SURFACE COURSE TYPE 1 PG. 64-22 MEDIUM TRAFFIC ITEM 448 ----	1 1/4"	1 1/4"
(2) ASPHALT CONCRETE INTERMEDIATE COURSE TYPE 2 PG. 64-22 MEDIUM TRAFFIC ITEM 448-----	1 3/4"	1 3/4"
(3) BITUMINOUS AGGREGATE BASE ITEM 301 ---- (TWO COURSES OF 3")	3"	6"
(4) AGGREGATE BASE ITEM 304 ----------	6"	N/A

* NOTE: MINIMUM PAVEMENT DEPTH ARE TYPICAL FOR RESIDENTIAL APPLICATIONS. ROADWAYS IN INDUSTRIAL AND COMMERCIAL AREAS MAY BE REQUIRED TO HAVE DEPTHS DESIGNED FOR ACTUAL TRAFFIC LOADINGS USING AASHTO METHODS AS DIRECTED BY THE CITY ENGINEER.

COLLECTOR AND ARTERIAL STREETS **	(MINIMUM PAVEMENT DEPTH*)	ALTERNATIVE ***
(1) ASPHALT CONCRETE SURFACE COURSE TYPE 1 PG. 64-22 MEDIUM TRAFFIC ITEM 448 ----	1 1/4"	1 1/4"
(2) ASPHALT CONCRETE INTERMEDIATE COURSE TYPE 2 PG. 64-22 MEDIUM TRAFFIC ITEM 448-----	1 3/4"	1 3/4"
(3) BITUMINOUS AGGREGATE BASE ITEM 301 ---- (TWO COURSES OF 3")	6"	9"
(4) AGGREGATE BASE ITEM 304 ----------	6"	N/A

** NOTE: COLLECTOR AND ARTERIAL STREET PAVEMENT DEPTHS SHALL BE DESIGNED TO ACTUAL TRAFFIC LOADINGS USING THE AASHTO GUIDE FOR DESIGN OF PAVEMENT STRUCTURES. SHOULD CALCULATED DEPTHS BE LESS THAN THE MINIMUM DEPTHS, THE MINIMUM DEPTHS SHALL BE USED.

*** NOTE: ALTERNATIVE PAVEMENT SECTION REQUIRES CITY ENGINEER'S APPROVAL PRIOR TO INSTALLATION.

Date: 05/01/2014

City of Dublin
ENGINEERING

STANDARD DRAWING

TYPICAL STREET SECTIONS

SHEET 1 OF 1

DRAWING NO. **RD-01**

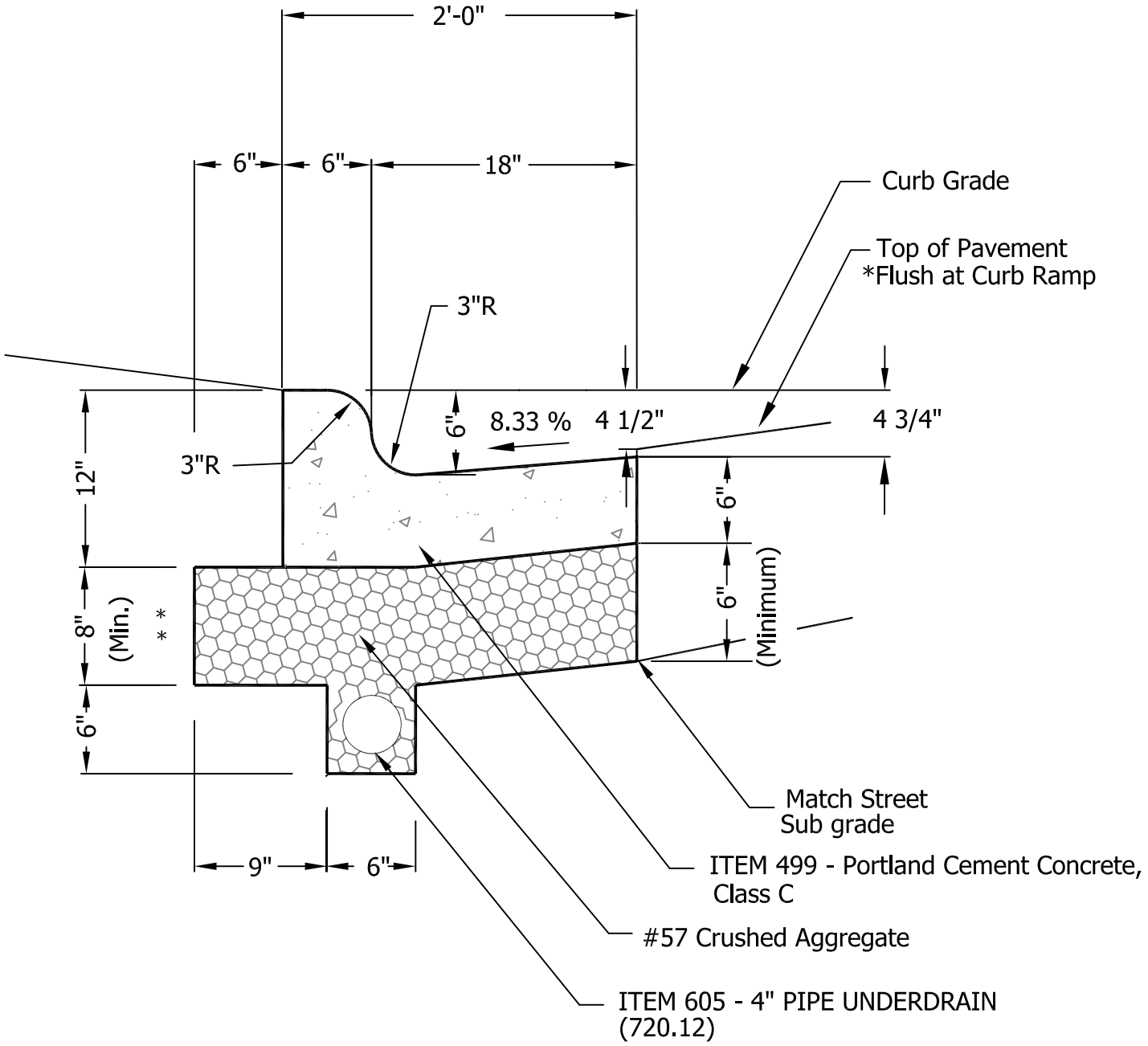

* SEE DRAWING RD-03 FOR GUTTER TRANSITION AT CURB RAMP.

** 10" AT COMMERCIAL DRIVE ENTRANCES.

Date: 05/01/2014

City of Dublin
ENGINEERING

STANDARD DRAWING

COMBINATION CONCRETE CURB AND GUTTER

SHEET 1 OF 1

DRAWING NO. ***RD-02***

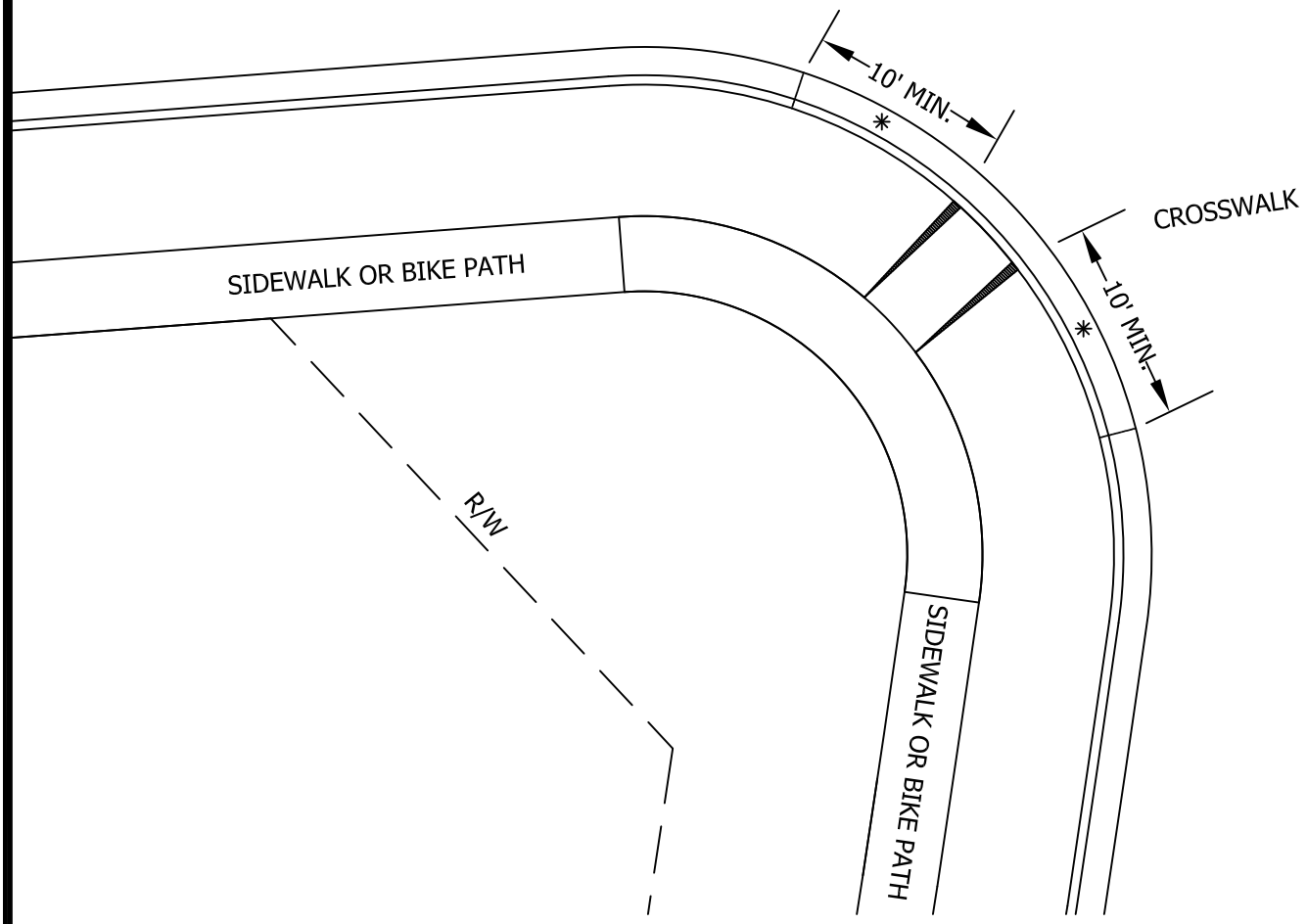

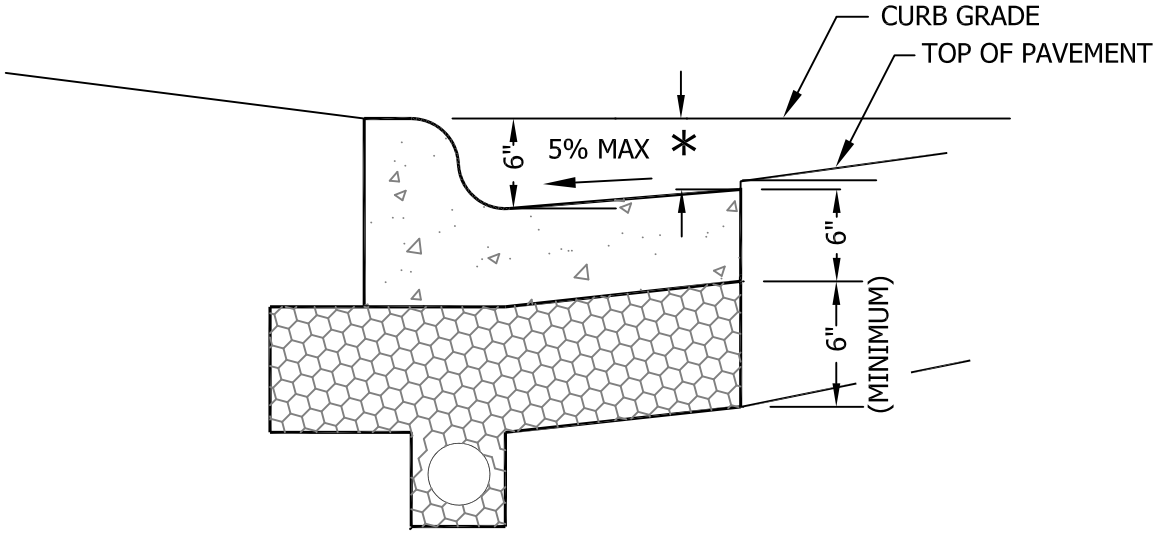

* TRANSITION GUTTER LIP FROM 4 1/2"-INCH TYPICAL DEPTH TO 5 5/8-INCH DEPTH WITHIN AT LEAST 10-FEET OF THE CURB RAMP. THE 5 5/8-INCH DEPTH IS TO BE MAINTAINED THROUGH THE CURB RAMP. THE TRANSITION LENGTH MAY BE ADJUSTED PER THE DIRECTION OF THE CITY ENGINEER.

Date: 05/01/2014

City of Dublin
ENGINEERING

STANDARD DRAWING

TYPICAL GUTTER SECTION TRANSITIONS

SHEET 1 OF 1

DRAWING NO. ***RD-03***

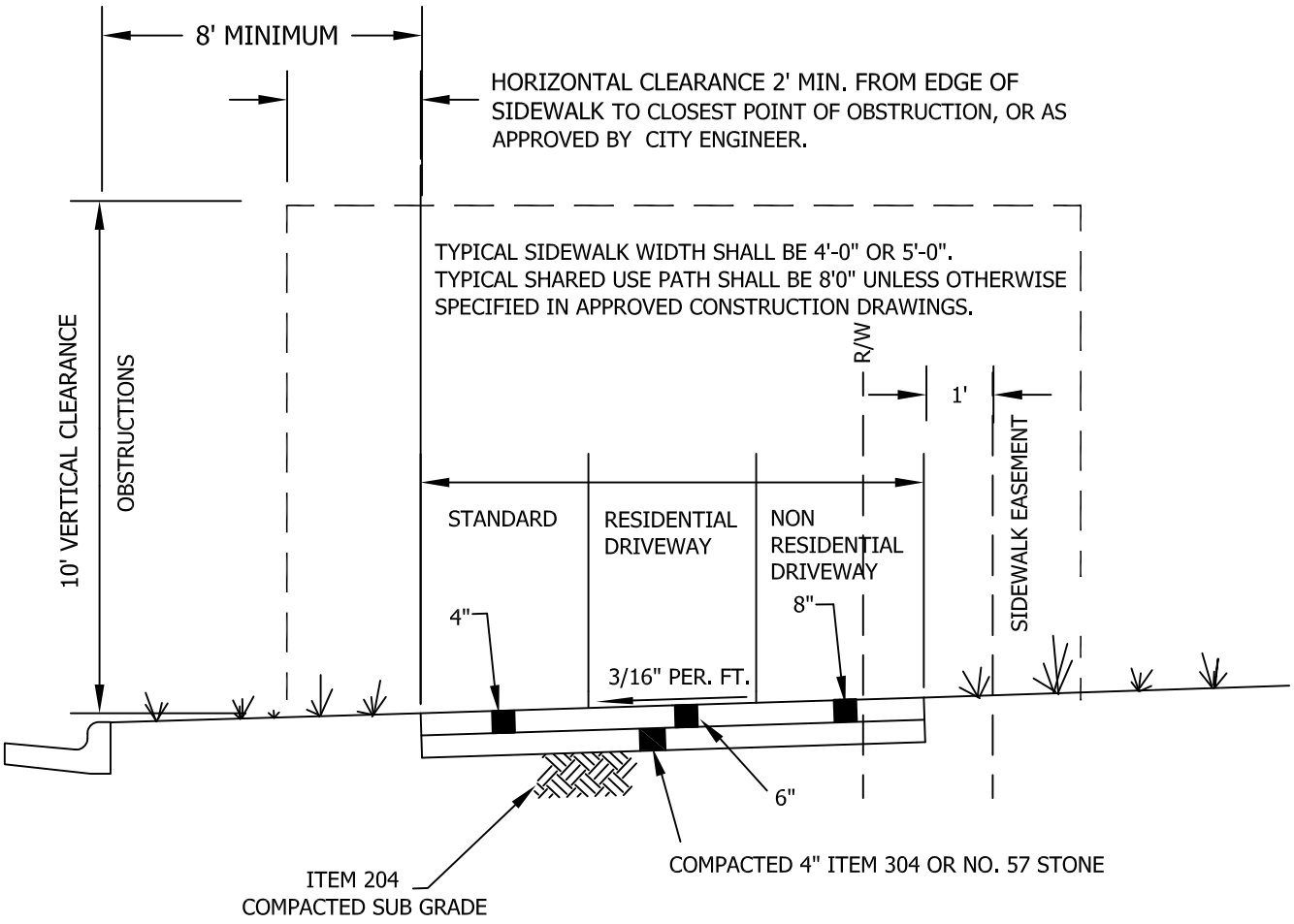

1. ALL WALKWAYS SHALL BE CONSTRUCTED PER CCMS ITEM 608 OR AS DIRECTED BY CITY ENGINEER.
2. ALL DISTURBED AREAS SHALL BE SEEDED AND MULCHED. SEED MIXTURE SHALL BE APPROVED BY THE CITY ENGINEER.
3. CITY OF COLUMBUS CONSTRUCTION AND MATERIAL SPECIFICATIONS, CURRENT EDITIONS, AND ANY OTHER SUPPLEMENTS THERETO, SHALL GOVERN ALL CONSTRUCTION ITEMS UNLESS OTHERWISE NOTED.
4. SIDEWALKS/BIKE PATHS CROSSING RESIDENTIAL DRIVEWAYS SHALL BE 6" CLASS C CONCRETE ITEM 499. SIDEWALKSSHARED USE PATHS CROSSING NON-RESIDENTIAL DRIVEWAY APPROACHES SHALL BE MINIMUM 8" CLASS C CONCRETE,ITEM 499 UNLESS OTHERWISE APPROVED BY THE CITY ENGINEER.
5. ALL COMMERCIAL DRIVES SHALL HAVE 6" OF ITEM 304.
6. INSPECTION SCHEDULING SHALL BE MADE WITH THE BUILDING DIVISION WHEN CONCRETE FORMS ARE READY FOR INSPECTION, AT LEAST 48 HOURS BEFORE CONCRETE IS TO BE PLACED AT (614) 410-4600.
7. ALL SHARED USE PATH JOINTS ARE TO BE SAWCUT.
8. SIDEWALKS/FLATWORK SHALL BE TOOL CUT & RETRACED.
9. FULL DEPTH EXPANSION MATERIAL (1/2" THICK) SHALL BE PLACED ADJOINING ALL EXISTING CONCRETE CONFORMING TO ASTM D-1752 TYPE 1.

Date: 05/01/2014

City of Dublin
ENGINEERING

STANDARD DRAWING

CONCRETE SIDEWALK AND SHARED USE PATH

SHEET 1 OF 1

DRAWING NO. **RD-05**

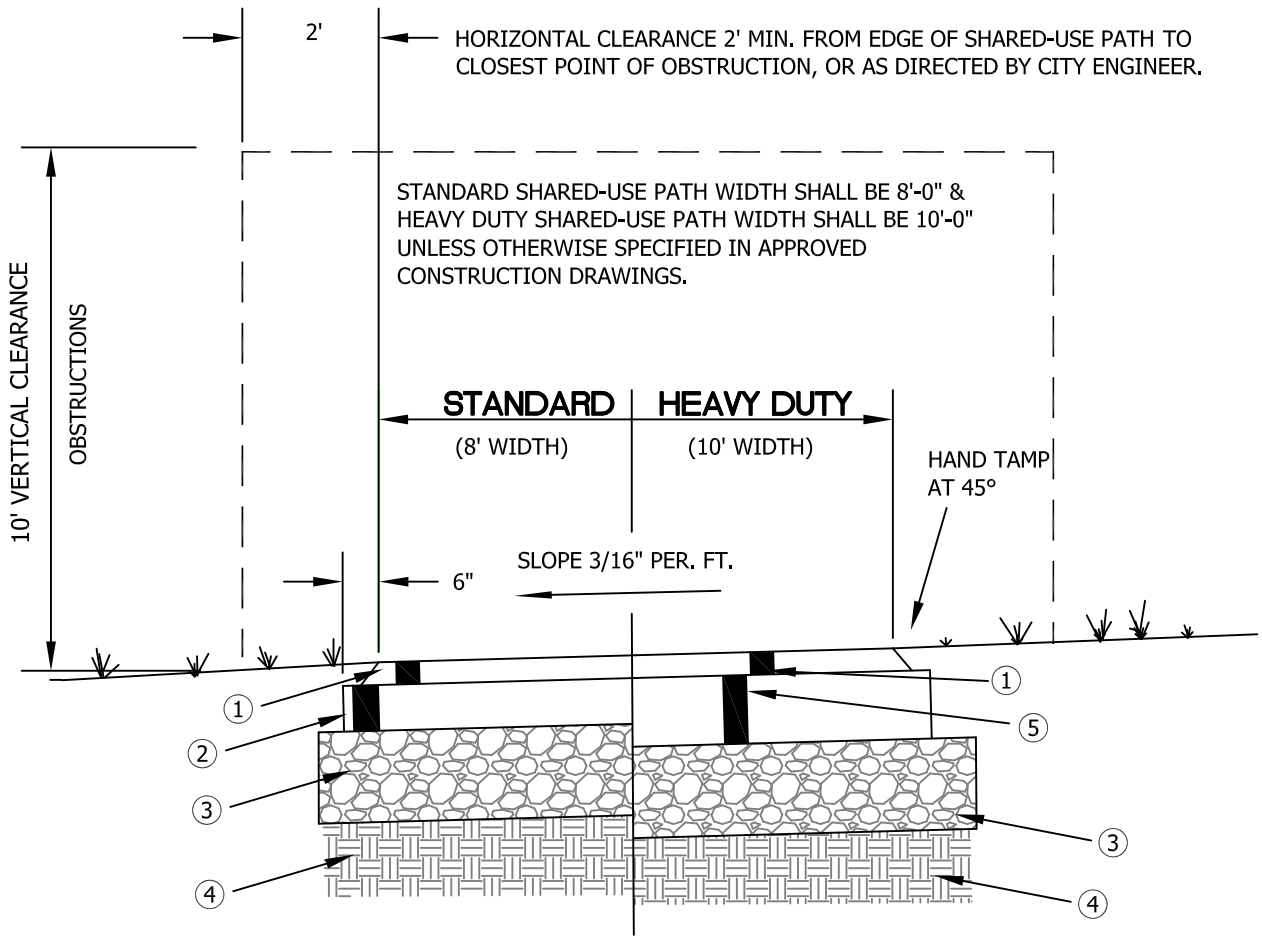

1. 1-1/2" ITEM 448, ASPHALT CONCRETE, SURFACE COURSE TYPE 1 (MEDIUM TRAFFIC), PG. 64-22
2. 3" ITEM 301, ASPHALT CONCRETE BASE
3. 6" ITEM 304, AGGREGATE BASE
4. ITEM 204, SUBGRADE COMPACTION
5. 4 1/2" ITEM 301, ASPHALT CONCRETE BASE

1. ALL TOPSOIL SHALL BE REMOVED FROM SUB GRADE AREAS. ITEM 204 SHALL BE COMPACTED TO NO LESS THAN 98% OF MAX. DRY DENSITY. EXCESS EXCAVATED MATERIAL SHALL BE REMOVED FROM THE SITE.
2. ALL DISTURBED AREAS SHALL BE SEEDED AND MULCHED. SEED MIXTURE REQUIRES THE APPROVAL OF THE CITY ENGINEER.
3. PAVEMENT MARKINGS AND SIGNAGE SHALL CONFORM TO OHIO MANUAL ON UNIFORM TRAFFIC CONTROL DEVICES.
4. SHARED-USE PATHS CROSSING CONCRETE RESIDENTIAL DRIVEWAY APPROACHES SHALL BE 6" PC CONCRETE ACROSS THE WIDTH OF THE DRIVEWAY APPROACH, UNLESS OTHERWISE APPROVED BY THE CITY ENGINEER. SHARED-USE PATHS CROSSING RESIDENTIAL DRIVEWAY APPROACHES SHALL MATCH THE THICKNESS AND CROSS-SECTION OF THE DRIVEWAY APPROACH OR 8" PC CONCRETE, WHICHEVER IS GREATER, AS APPROVED BY THE CITY ENGINEER.
5. FOR GEOMETRIC STANDARDS FOR CURB RAMP REFER TO DUBLIN STD. DWG. PD-01.

Date: 05/01/2014

City of Dublin
ENGINEERING

STANDARD DRAWING

SHARED-USE PATH: STANDARD AND HEAVY DUTY

SHEET 1 OF 1

DRAWING NO. ***RD-06***

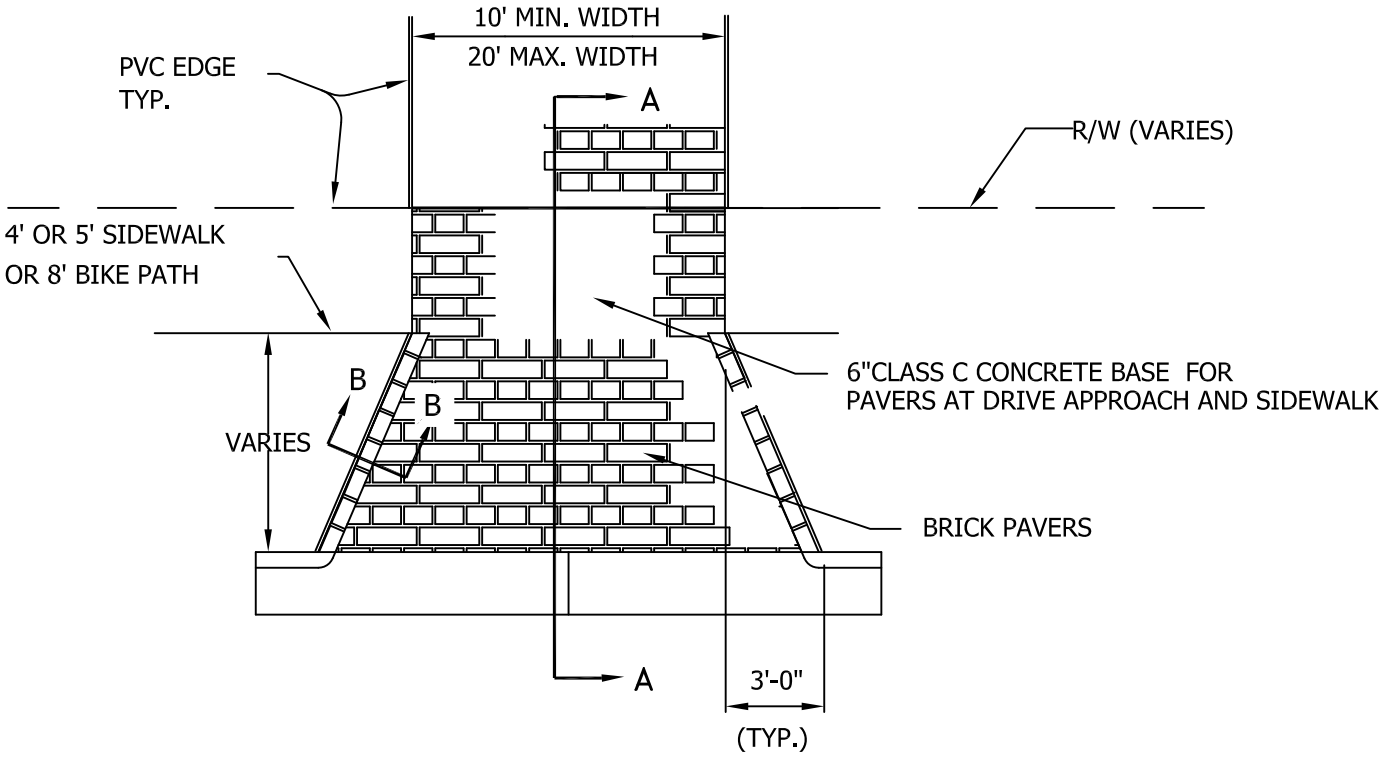

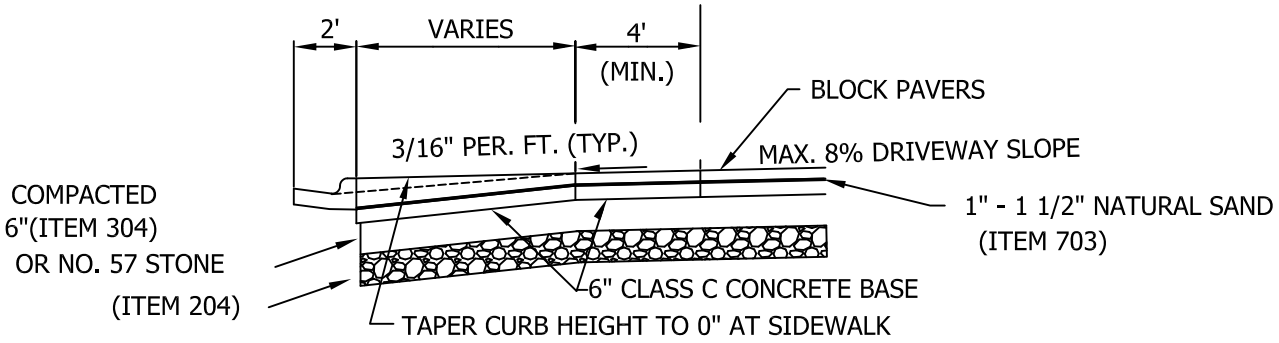

SECTION A-A

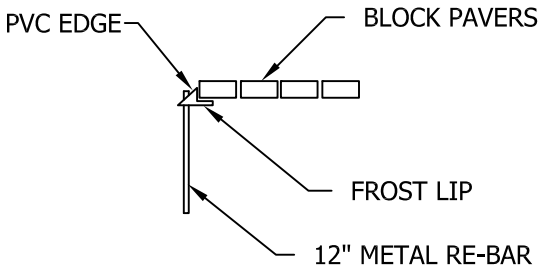

SECTION B-B

Date: 05/01/2014

City of Dublin
ENGINEERING

STANDARD DRAWING

RESIDENTIAL DRIVEWAY AND APPROACH WITH BRICK PAVERS

SHEET 3 OF 9

DRAWING NO. ***RD-07***

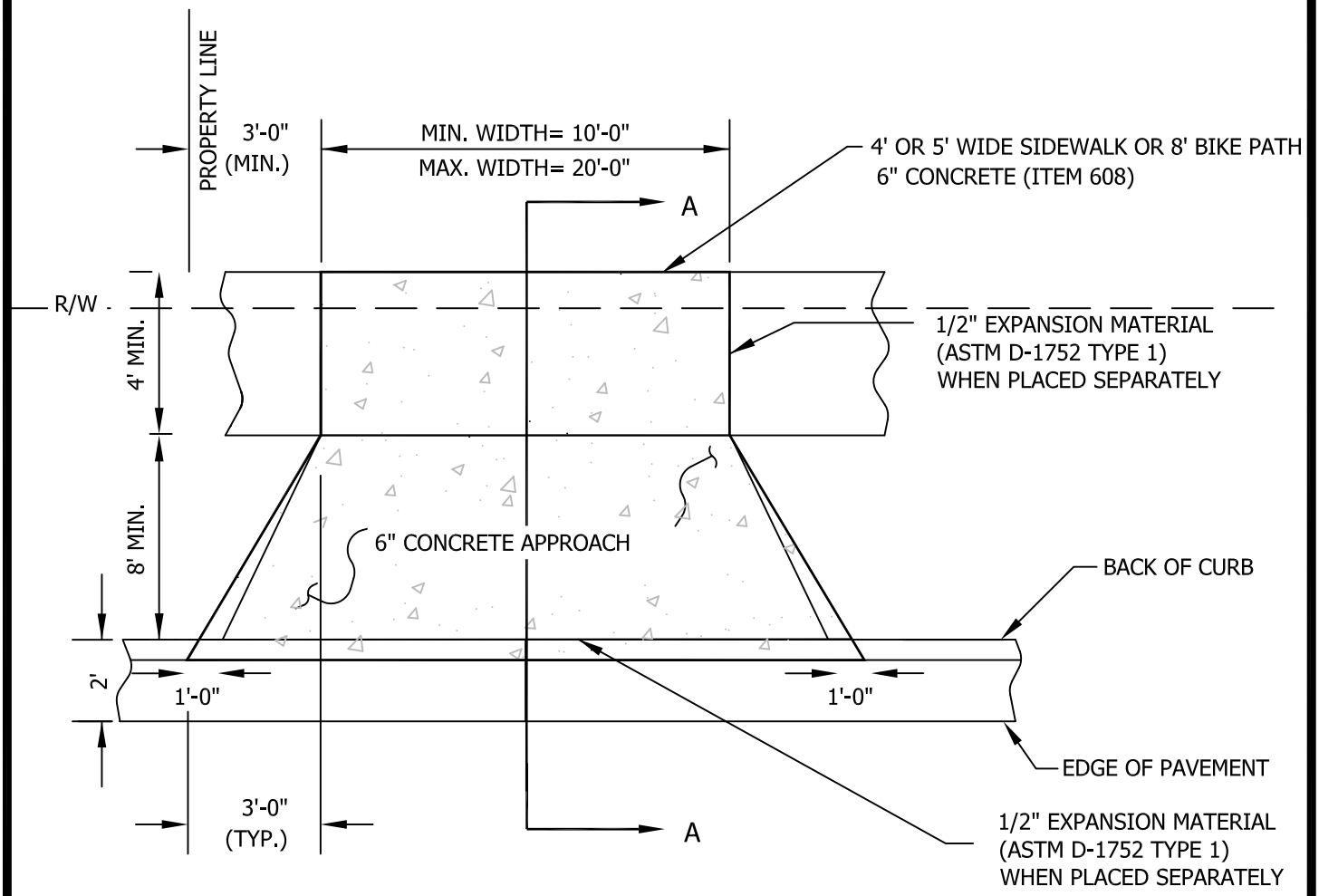

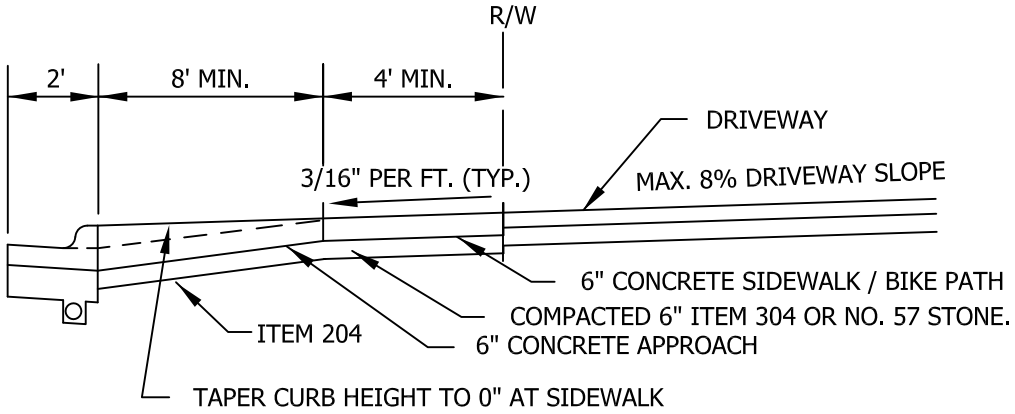

SECTION A-A

Date: 05/01/2014

City of Dublin
ENGINEERING

STANDARD DRAWING

RESIDENTIAL DRIVEWAY APPROACH FOR STREETS WITH CURB AND GUTTER

SHEET 1 OF 9

DRAWING NO. **RD-07**

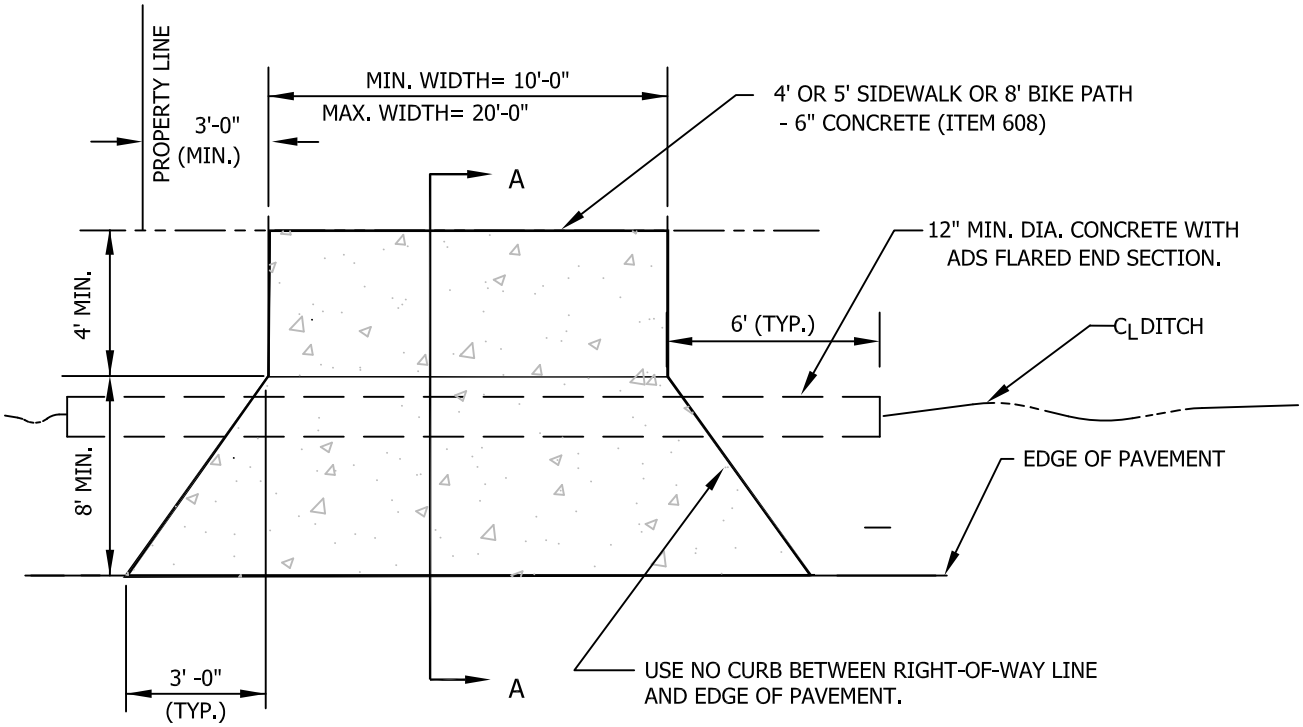

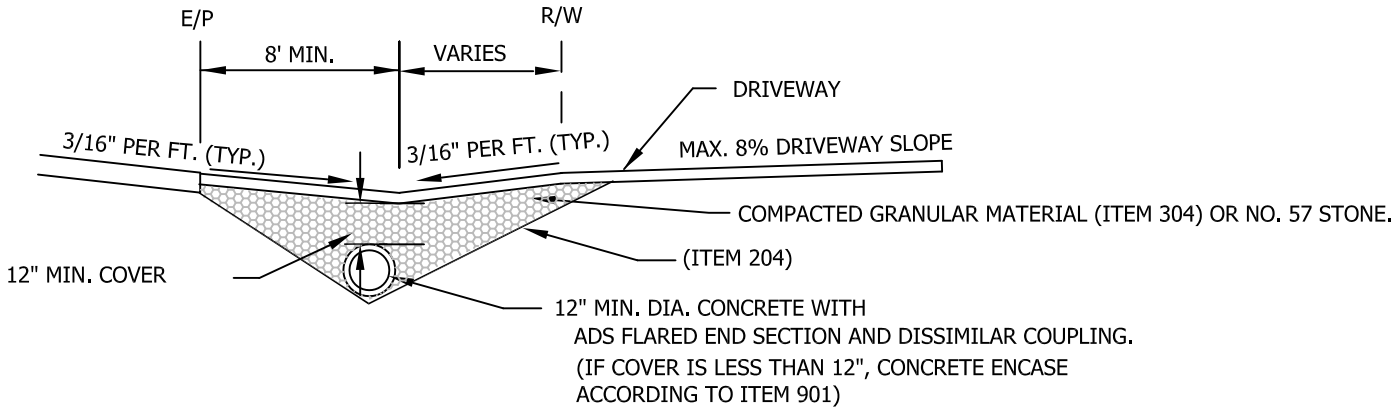

SECTION A-A

NOTE:

1. THE CITY ENGINEER MAY REQUIRE LARGER PIPE TO BE INSTALLED. MINIMUM SLOPE OF PIPE SHALL BE 1 % UNLESS OTHERWISE APPROVED.

2. DRIVE APPROACH SHALL BE 6" CONCRETE OR ALTERNATE ASPHALT AS REQUIRED.
   6" AGGREGATE BASE ITEM 304
   1 1/4" ASPHALT ITEM 402
   1 3/4" ASPHALT ITEM 404

Date: 05/01/2014

City of Dublin
ENGINEERING

STANDARD DRAWING

RESIDENTIAL DRIVEWAY APPROACH FOR STREETS WITHOUT CURB AND GUTTER

DRAWING NO. **RD-07**

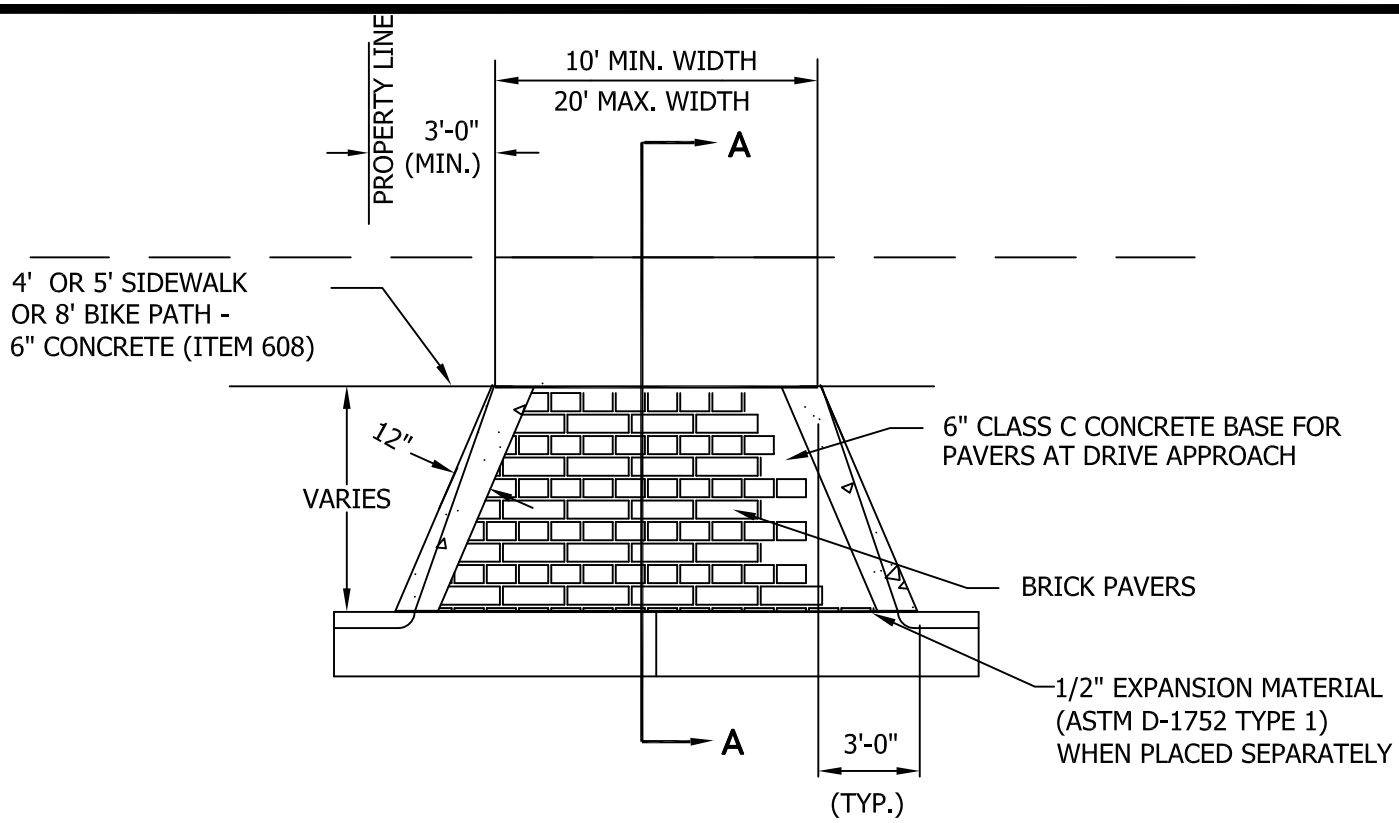

SEE SHEET 5 OF 9 OF CITY OF DUBLIN STANDARD DRAWING RD-07 FOR ADDITIONAL REQUIREMENTS FOR BRICK PAVERS.

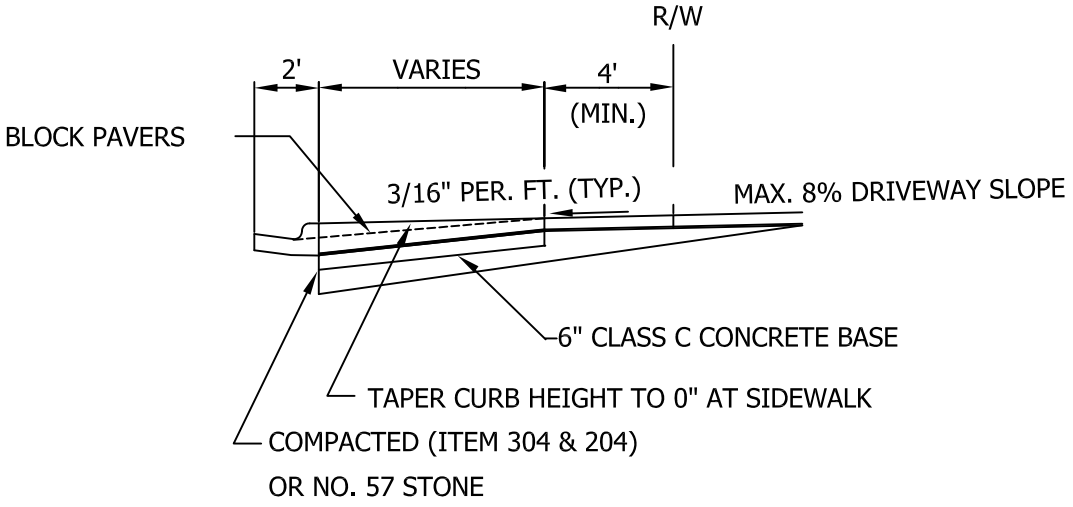

SECTION A–A

Date: 05/01/2014

City of Dublin
ENGINEERING

STANDARD DRAWING

RESIDENTIAL DRIVEWAY APPROACH FOR COMBINATION CONCRETE AND BRICK PAVERS

SHEET 4 OF 9

DRAWING NO. ***RD-07***

1. THE FOLLOWING ARE SPECIFICATIONS WHICH APPLY TO THE SUBSTITUTION OF APPROVED BRICK PAVERS FOR CONCRETE DRIVEWAYS AND DRIVEWAY APPROACHES.

2. PAGES 3 AND 4 OF 9 OF CITY OF DUBLIN STANDARD DRAWING RD-07 DETAIL THE APPROVED PLACEMENT OF BRICK PAVERS.

3. THE WORK SHALL BE INSPECTED PRIOR TO PLACEMENT BY CITY OF DUBLIN CITY ENGINEER OR DESIGNEE(S).

4. THE BRICK PAVERS ON THE GRANULAR BASE SHALL HAVE A PVC FROST LIP/EDGE OR APPROVED EQUIVALENT TO SERVE AS A FORM FOR THE PAVERS.

5. THE CLASS C CONCRETE BASE SHALL BE PROVIDED ACCORDING TO CITY OF COLUMBUS CONSTRUCTION AND MATERIAL SPECIFICATIONS (CCMS).

6. THE GRANULAR BASE SHALL BE PLACED ACCORDING TO CCMS. PAVING SHALL BE PROVIDED ONLY WITH ACCEPTABLE BASE CONDITIONS, AS DETERMINED BY THE CITY OF DUBLIN CITY ENGINEER OR DESIGNEE(S). THIS INCLUDES, BUT IS NOT LIMITED TO, SOFT, WATER SATURATED, FROZEN OR FROST-AFFECTED MATERIAL. UNACCEPTABLE MATERIAL SHALL BE STABILIZED OR REMOVED PRIOR TO PAVING.

7. THE FOLLOWING PAVING MATERIALS HAVE BEEN ACCEPTED FOR USE AS SUBSTITUTES FOR CONCRETE DRIVEWAYS AND DRIVEWAY APPROACHES. ACCEPTANCE IS SUBJECT TO A REVIEW OF MANUFACTURER'S SPECIFICATIONS AND FIELD PERFORMANCE BY THE CITY ENGINEER. ACCEPTANCE OF ALTERNATE MATERIALS IS SUBJECT TO CONTINUAL REVIEW AND MAY BE WITHDRAWN AT THE DISCRETION OF THE CITY ENGINEER.

ACCEPTED MATERIALS:

UNI-STONE PAVING STONES
INTER PAVE CORPORATION
8479 BROADWELL ROAD
CINCINNATI, OHIO 43224
(513) 474-3783

Date: 05/01/2014

City of Dublin
ENGINEERING

STANDARD DRAWING

RESIDENTIAL BRICK PAVER SIDEWALK, DRIVEWAY, AND DRIVEWAY APPROACH

DRAWING NO. ***RD-07***

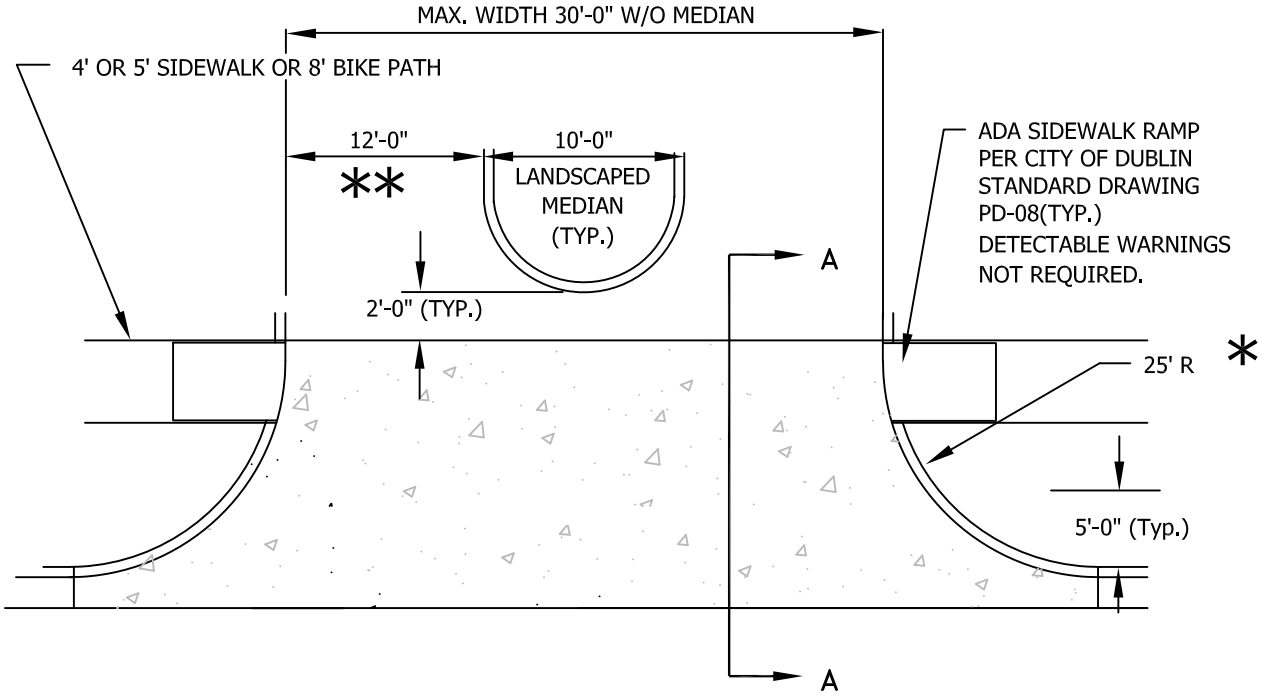

* MINIMUM RADIUS IS 25 FEET UNLESS OTHERWISE APPROVED BY THE CITY ENGINEER.

** MINIMUM LANE WIDTH SHALL BE 12'-0". NUMBER OF LANES REQUIRES APPROVAL BY THE CITY ENGINEER.

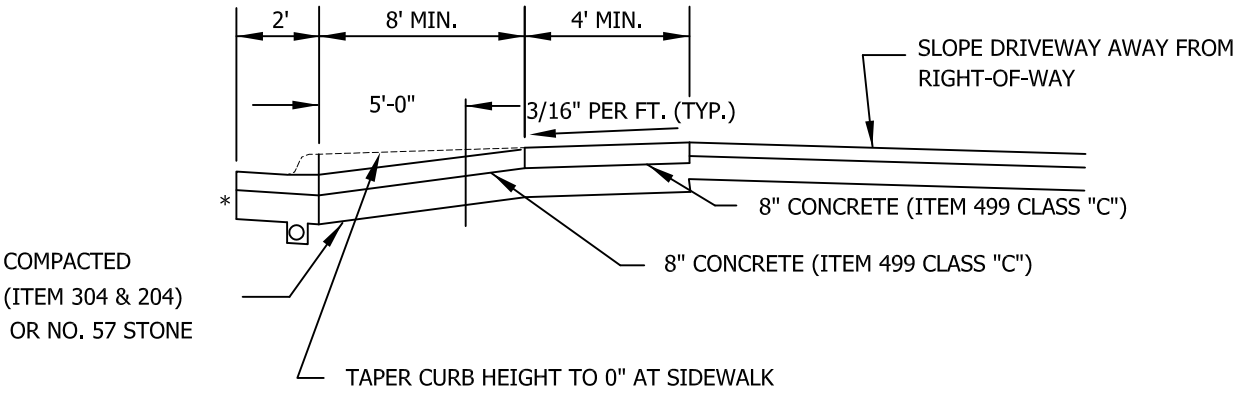

SECTION A-A

DRIVEWAY APPROACH SHALL BE 8" PORTLAND CEMENT CONCRETE OR STRUCTURAL EQUIVALENT AS APPROVED BY THE CITY ENGINEER.

EXISTING CURB AND GUTTER TO BE REMOVED WITHIN THE LIMITS OF DRIVEWAY. APPROACH AND GUTTER TO BE POURED INTEGRAL. MAINTAIN GUTTER SLOPE AND UNDER DRAIN THROUGH THE DRIVEWAY.

* SEE DRAWING RD-02 FOR COMBINATION CONCRETE CURB & GUTTER.

Date: 05/01/2014

City of Dublin
ENGINEERING

STANDARD DRAWING

DIVIDED COMMERCIAL DRIVEWAY APPROACH FOR STREETS WITH CURB & GUTTER

DRAWING NO. ***RD-07***

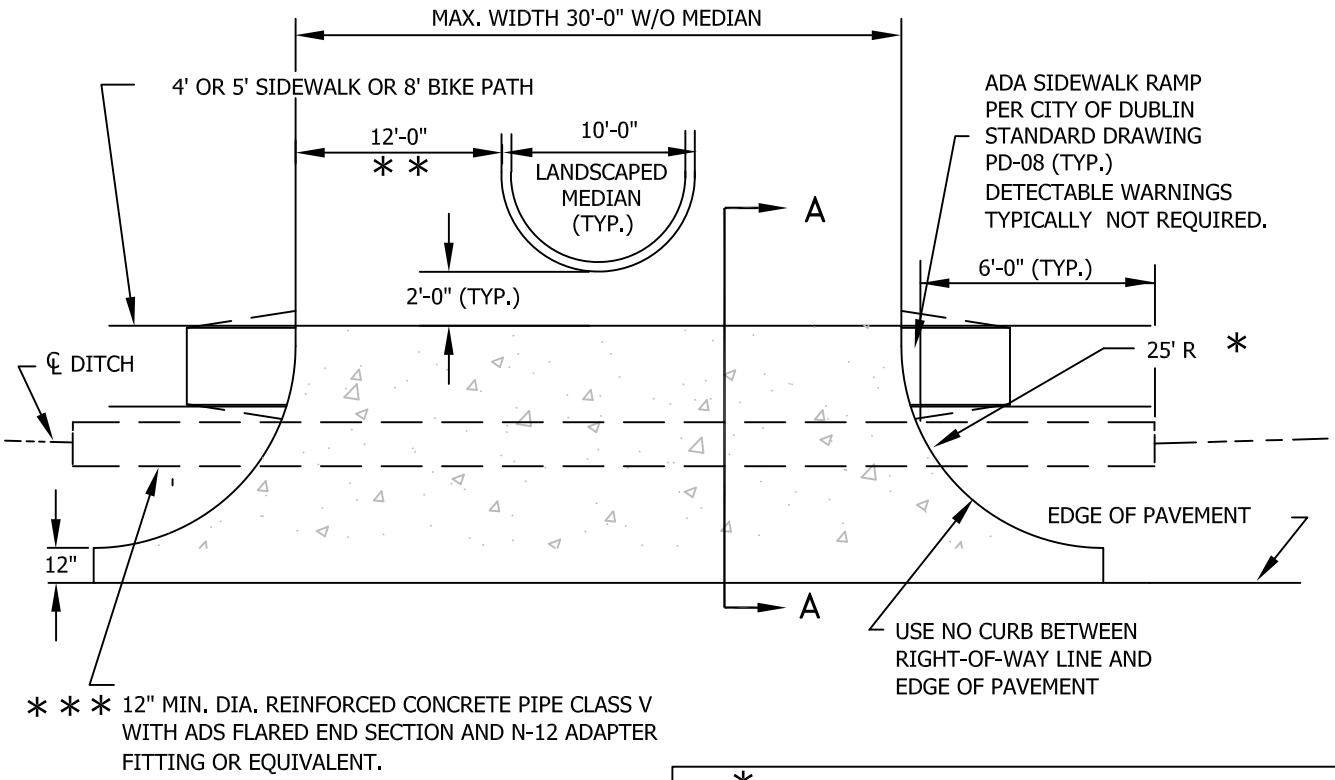

* * * NOTE: THE CITY ENGINEER MAY REQUIRE LARGER PIPE TO BE INSTALLED. MINIMUM SLOPE SHALL BE 1 % UNLESS OTHERWISE APPROVED.

* MINIMUM RADIUS IS 25 FEET UNLESS OTHERWISE APPROVED BY THE CITY ENGINEER.

* * MINIMUM LANE WIDTH SHALL BE 12'-0". NUMBER OF LANES REQUIRES APPROVAL BY THE CITY ENGINEER.

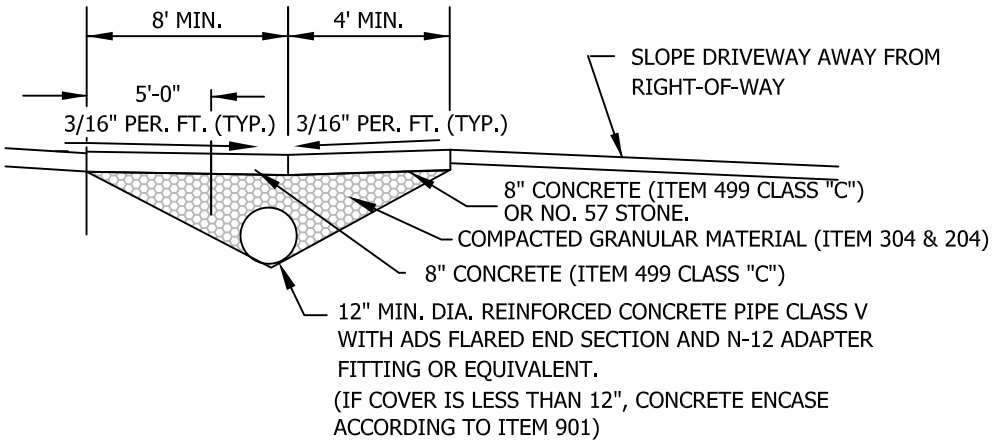

SECTION A-A

DRIVEWAY APPROACH SHALL BE 8" PORTLAND CEMENT CONCRETE OR STRUCTURAL EQUIVALENT AS APPROVED BY THE CITY ENGINEER.

Date: 05/01/2014

City of Dublin ENGINEERING

STANDARD DRAWING

DIVIDED COMMERCIAL DRIVEWAY APPROACH FOR STREETS WITHOUT CURB & GUTTER

DRAWING NO. **RD-07**

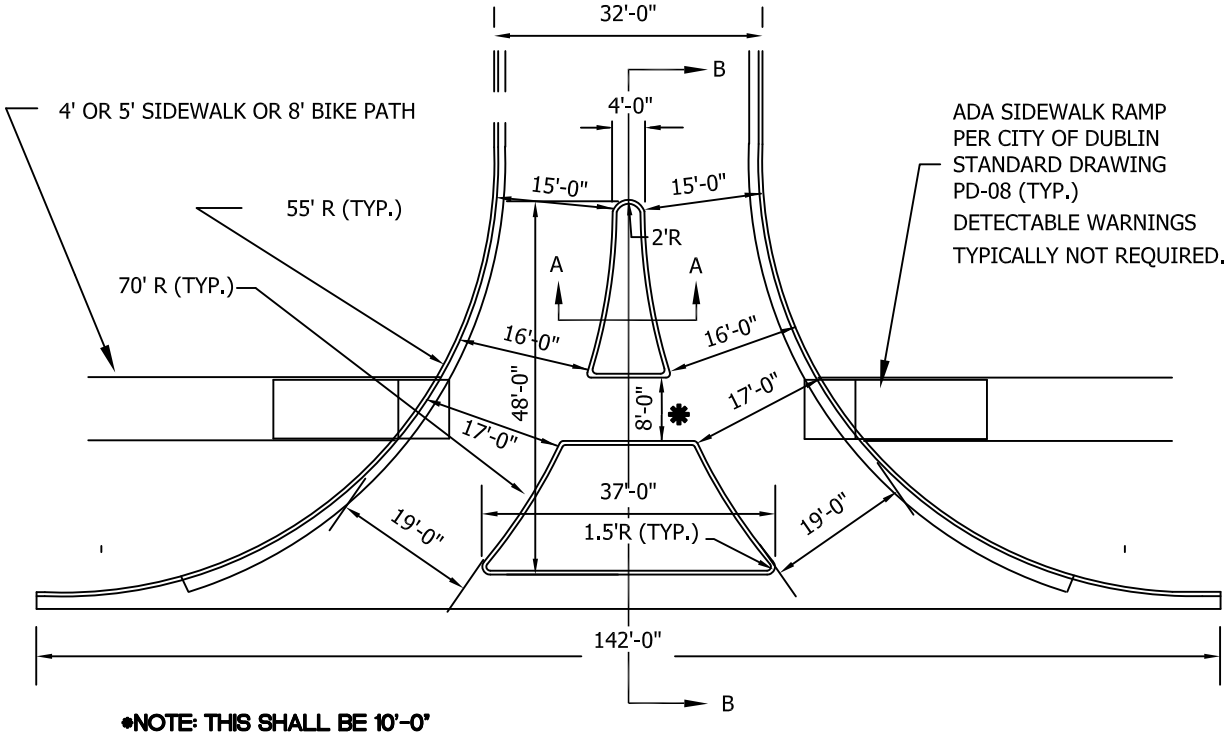

***NOTE: THIS SHALL BE 10'-0" FOR A BIKEPATH CROSSING CROSS SLOPE 1.56%.**

THIS DESIGN ACCOMMODATES WB-40 VEHICLES, AS PRESCRIBED BY AASHTO. IF A LARGER VEHICLE NEEDS ACCOMMODATED A SPECIFIC DESIGN WILL BE REQUIRED.

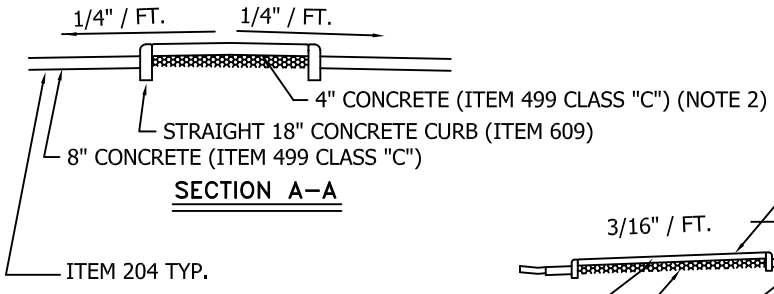

SECTION A–A

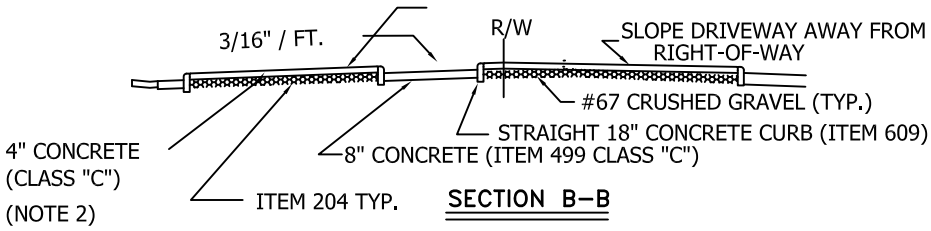

SECTION B–B

1. DRIVEWAY APPROACH SHALL BE 8" PC CONCRETE OR STRUCTURAL EQUIVALENT AS APPROVED BY THE CITY ENGINEER.
2. ISLAND SURFACE IN DRIVEWAY APPROACH MAY BE EITHER 4" PC CONCRETE OR LANDSCAPING VEGETATION WITH A HEIGHT NO GREATER THAN 3 FEET ABOVE THE TOP OF CURB. LANDSCAPING MATERIALS SHALL BE SUBJECT TO THE REVIEW AND APPROVAL OF THE CITY OF DUBLIN DIVISION OF PLANNING. MAINTENANCE OF LANDSCAPING SHALL BE THE RESPONSIBILITY OF THE PROPERTY OWNER.
3. EXISTING CURB AND GUTTER TO BE REMOVED WITHIN THE LIMITS OF DRIVEWAY. APPROACH AND GUTTER TO BE POURED INTEGRAL. MAINTAIN GUTTER SLOPE AND UNDER DRAIN THROUGH DRIVEWAY.

* SEE DRAWING RD-02 FOR COMBINATION CONCRETE CURB & GUTTER.

Date: 05/01/2014

City of Dublin
ENGINEERING

STANDARD DRAWING

RIGHT IN, RIGHT OUT COMMERCIAL APPROACH

DRAWING NO. ***RD-07***

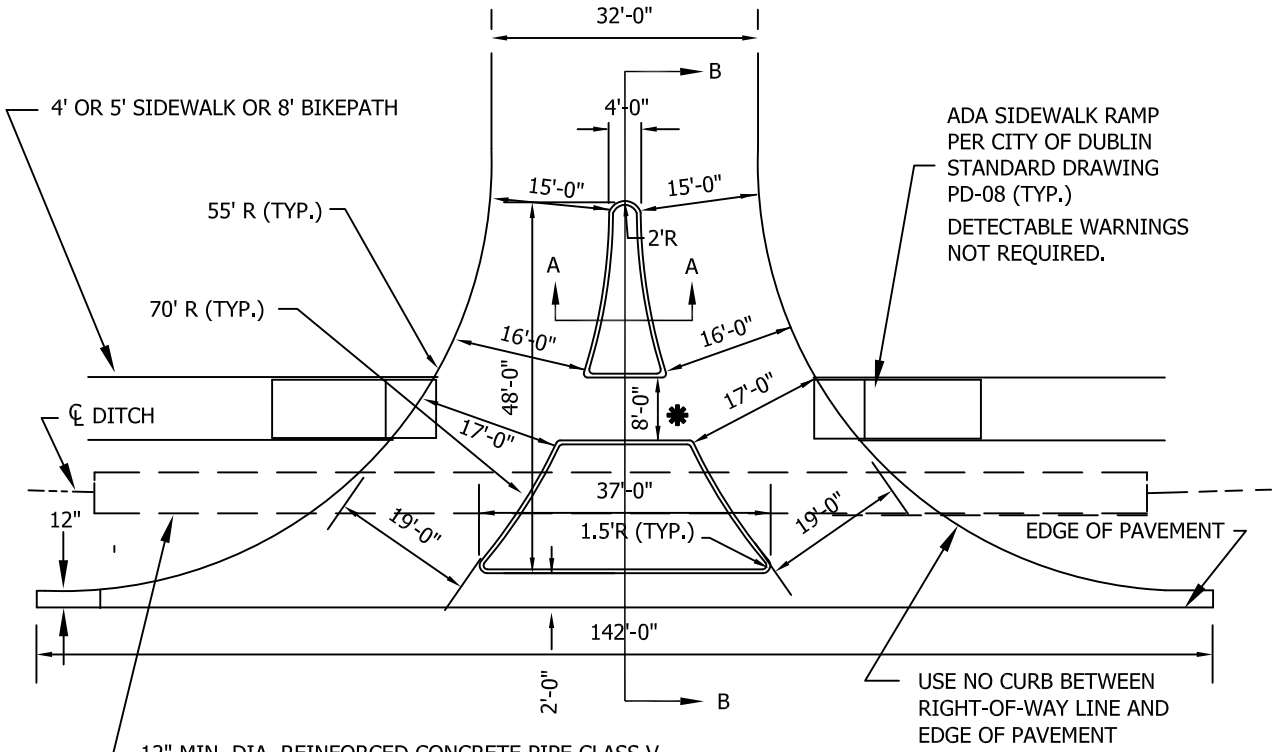

*NOTE: THIS SHALL BE 10'-0" FOR A BIKEPATH CROSSING CROSS SLOPE 1.56%.

THIS DESIGN ACCOMMODATES WB-40 VEHICLES, AS PRESCRIBED BY AASHTO. IF A LARGER VEHICLE NEEDS TO BE ACCOMMODATED A SPECIFIC DESIGN WILL BE REQUIRED.

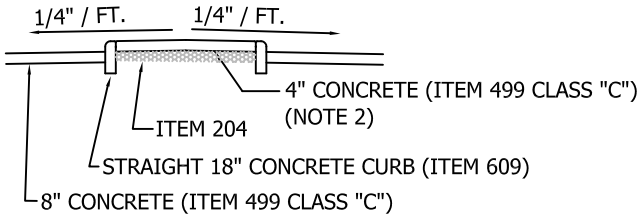

SECTION A-A

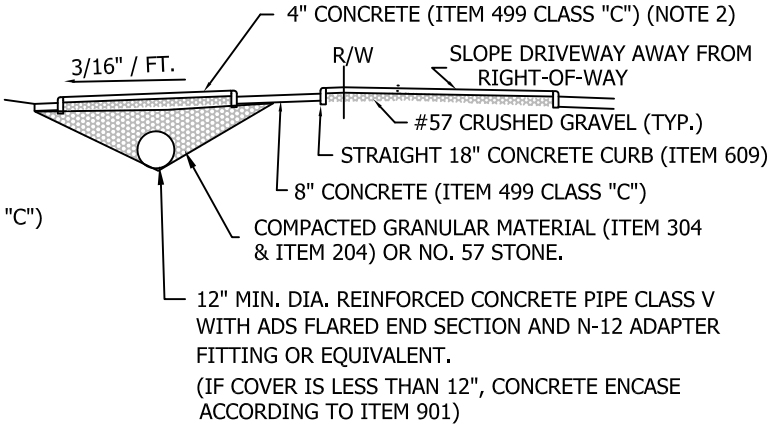

SECTION B-B

1. DRIVEWAY APPROACH SHALL BE 8" PC CONCRETE OR STRUCTURAL EQUIVALENT AS APPROVED BY THE CITY ENGINEER.
2. ISLAND SURFACE IN DRIVEWAY APPROACH MAY BE EITHER 4" PC CONCRETE OR LANDSCAPING VEGETATION WITH A HEIGHT NO GREATER THAN 3 FEET ABOVE THE TOP OF CURB. LANDSCAPING MATERIALS SHALL BE SUBJECT TO THE REVIEW AND APPROVAL OF THE CITY OF DUBLIN DIVISION OF PLANNING. MAINTENANCE OF LANDSCAPING SHALL BE THE RESPONSIBILITY OF THE PROPERTY OWNER.

Date: 05/01/2014

City of Dublin
ENGINEERING

STANDARD DRAWING

RIGHT IN, RIGHT OUT COMMERCIAL APPROACH WITHOUT CURB & GUTTER

DRAWING NO. **RD-07**

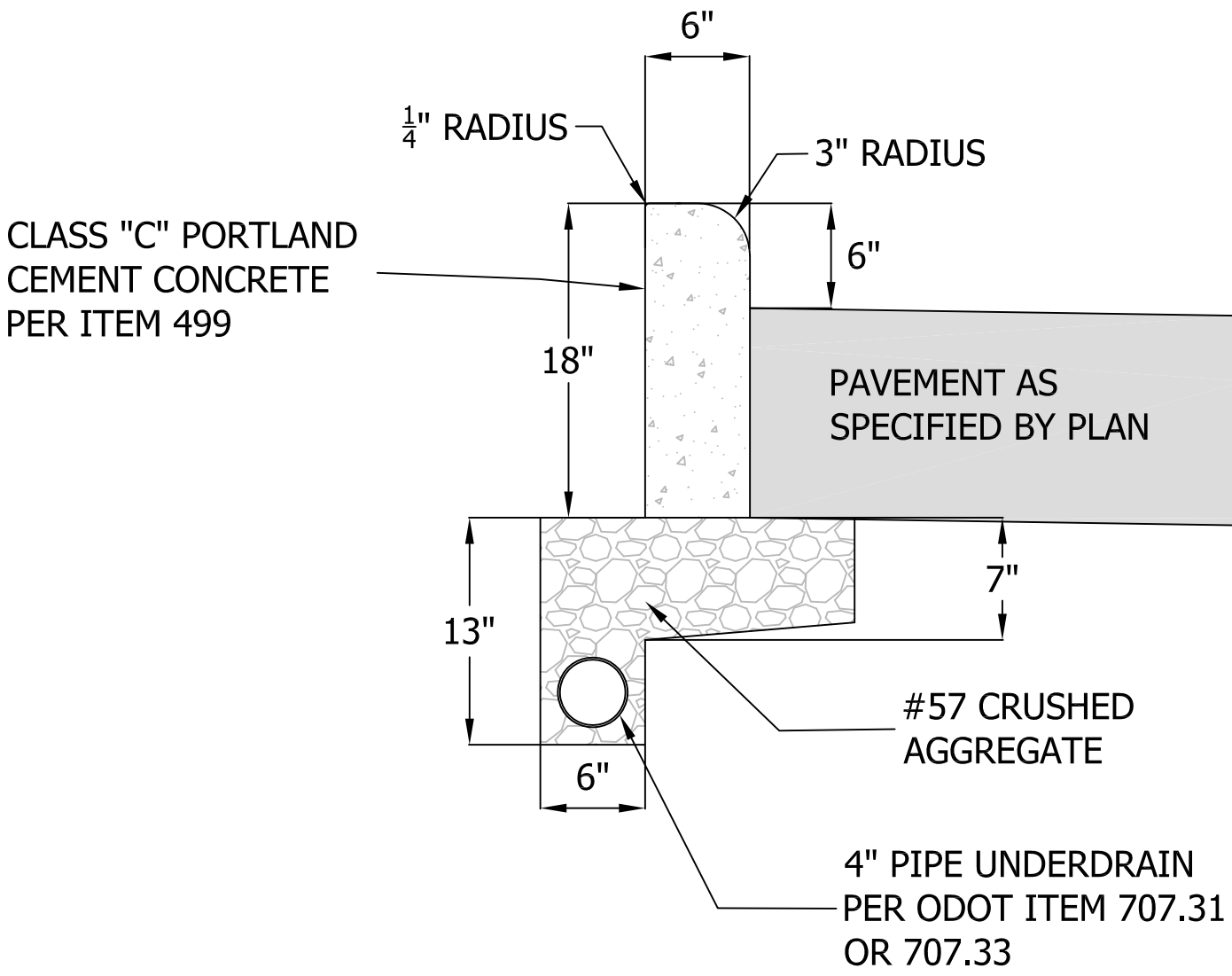

Date: 05/01/2014

City of Dublin
ENGINEERING

STANDARD DRAWING

STRAIGHT 18" CONCRETE CURB

SHEET 1 OF 1

DRAWING NO. ***RD-11***

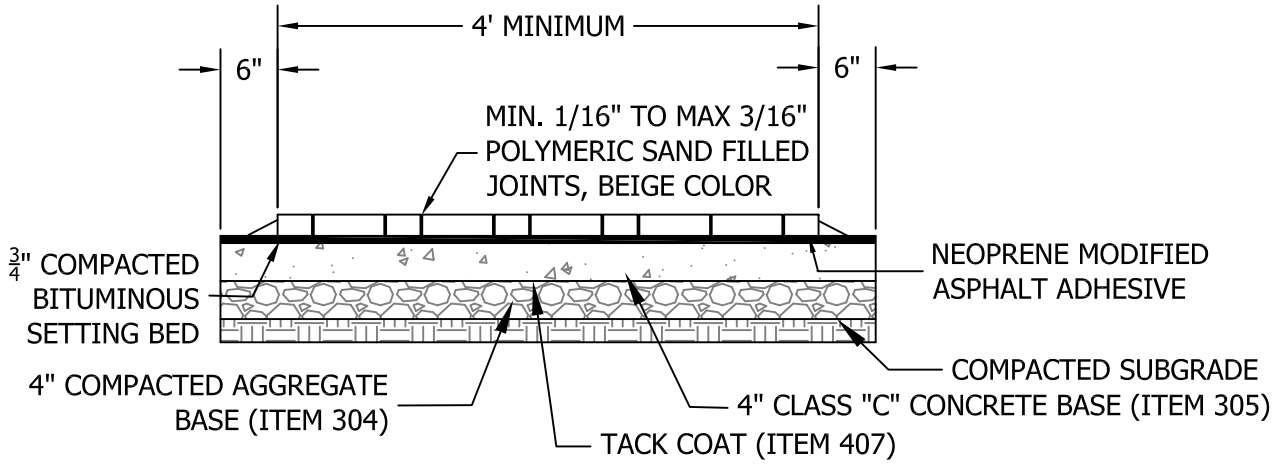

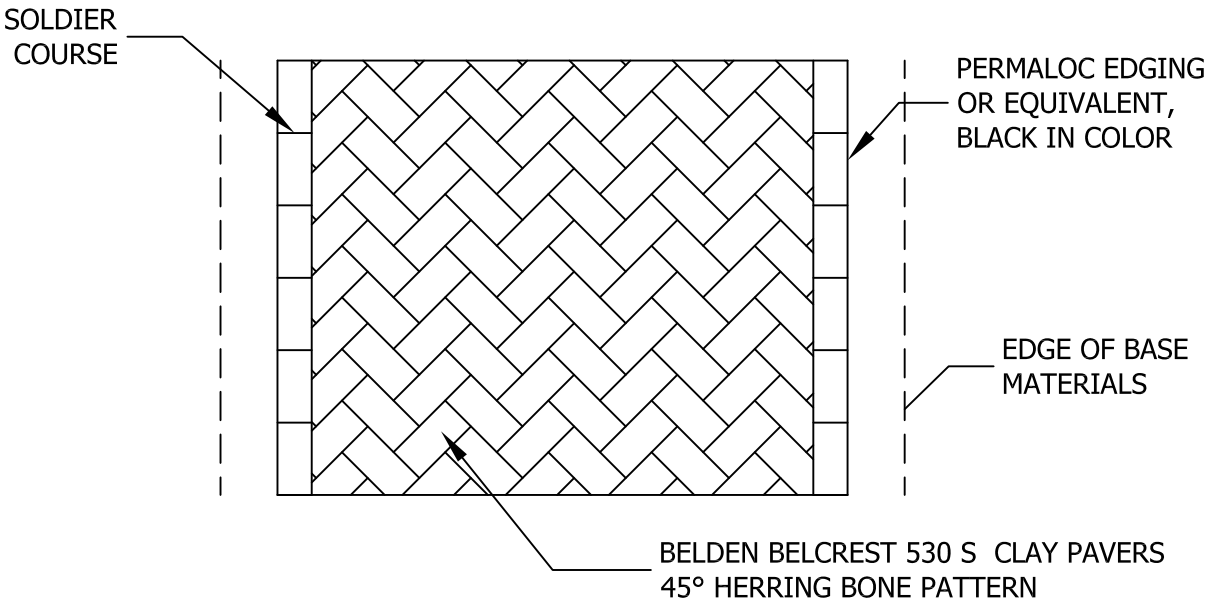

NOTES:

1.) THE PAVERS SHALL BE BELDEN BELCREST 530 S CLAY PAVERS, 2 1/4" x 3 5/8" x 7 5/8", MADE BY BELDEN BRICK COMPANY, CANTON, OHIO, LAID IN A 45 ° HERRINGBONE PATTERN.

2.) ALL JOINTS SHALL BE FILLED WITH A POLYMERIC SAND. SAND SHALL BE ALLIANCE GATOR MAXX POLYMERIC SAND FOR OVERLAYS AND BEIGE IN COLOR OR AN APPROVED EQUAL.

3.) FURNISH NEOPRENE MODIFIED ASPHALT ADHESIVE THAT CONTAINS 2% GRADE WM1 NEOPRENE, OXIDIZED ASPHALT WITH A 150 DEGREE SOFTENING POINT (77 PENETRATION), AND 10% LONG-FIBERED INERT MATERIAL, AS SUPPLIED BY SEIDEL COMPANY, INC., NEWBURYPORT, MA, (617) 649-6740; HASTINGS PAVEMENT COMPANY, INC., LAKE SUCCESS, NY, (516) 379-3500; OR APPROVED EQUAL.

4.) FURNISH ASPHALT CEMENT CONFORMING TO ASTM D 3381, PG64-22. FINE AGGREGATE SHALL BE NATURAL SAND AND/OR STONE SAND COMPOSED OF HARD, DURABLE, UNCOATED PARTICLES, FREE FROM CLAY, SILT, ORGANIC MATERIAL, OR OTHER DELETERIOUS SUBSTANCES. ALL SAND SHALL BE UNIFORMLY GRADED AND PASS A NO. 4 SIEVE, MEETING THE REQUIREMENTS OF ASTM C 136. THE DRIED FINE AGGREGATE SHALL BE MIXED WITH HOT ASPHALT CEMENT AT THE PLANT AND HEATED TO APPROXIMATELY 300 DEGREES (F). APPROXIMATE MATERIAL PROPORTIONS SHALL BE 7% ASPHALT CEMENT AND 93% FINE AGGREGATE; OR 140 LBS ASPHALT TO 1,860 LBS FINE AGGREGATE PER TON.

Date: 05/01/2014

City of Dublin
ENGINEERING

STANDARD DRAWING

BRICK PAVER SIDEWALK

SHEET 1 OF 1

DRAWING NO. ***RD-12***

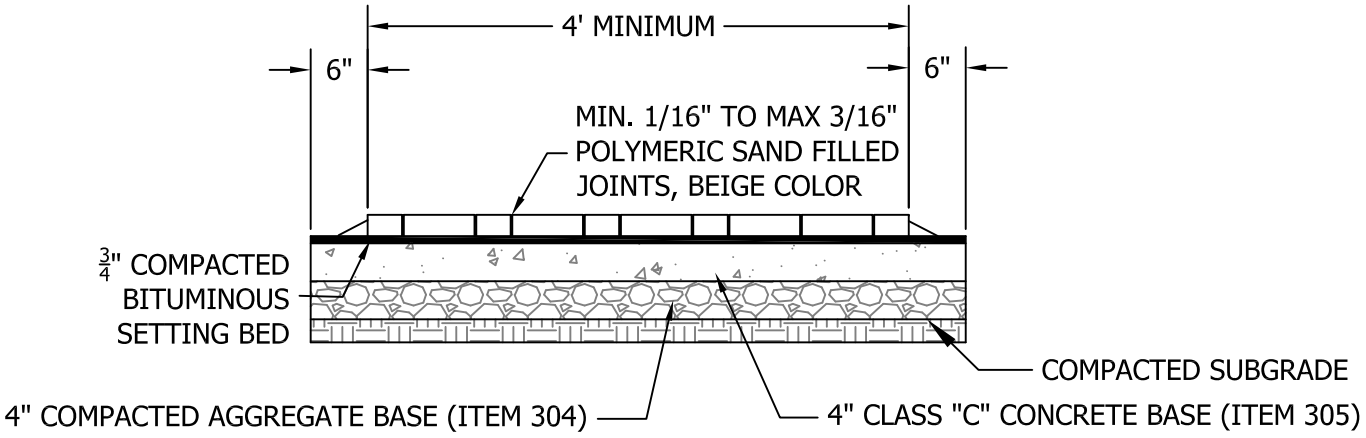

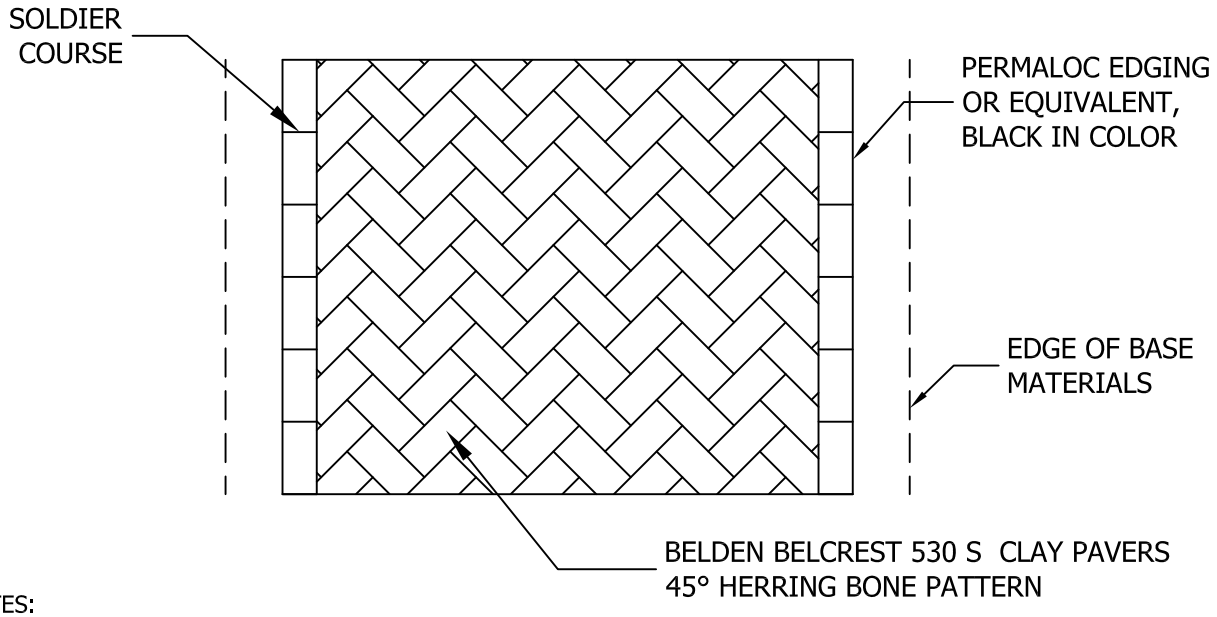

NOTES:

1.) THE PAVERS SHALL BE BELDEN BELCREST 530 S CLAY PAVERS, 2 1/4" x 3 5/8" x 7 5/8", MADE BY BELDEN BRICK COMPANY, CANTON, OHIO, LAID IN A 45 ° HERRINGBONE PATTERN.

2.) ALL JOINTS SHALL BE FILLED WITH A POLYMERIC SAND. SAND SHALL BE ALLIANCE GATOR MAXX POLYMERIC SAND FOR OVERLAYS AND BEIGE IN COLOR OR AN APPROVED EQUAL.

3.) FURNISH NEOPRENE MODIFIED ASPHALT ADHESIVE THAT CONTAINS 2% GRADE WM1 NEOPRENE, OXIDIZED ASPHALT WITH A 150 DEGREE SOFTENING POINT (77 PENETRATION), AND 10% LONG-FIBERED INERT MATERIAL, AS SUPPLIED BY SEIDEL COMPANY, INC., NEWBURYPORT, MA, (617) 649-6740; HASTINGS PAVEMENT COMPANY, INC., LAKE SUCCESS, NY, (516) 379-3500; OR APPROVED EQUAL.

4.) FURNISH ASPHALT CEMENT CONFORMING TO ASTM D 3381, PG64-22. FINE AGGREGATE SHALL BE NATURAL SAND AND/OR STONE SAND COMPOSED OF HARD, DURABLE, UNCOATED PARTICLES, FREE FROM CLAY, SILT, ORGANIC MATERIAL, OR OTHER DELETERIOUS SUBSTANCES. ALL SAND SHALL BE UNIFORMLY GRADED AND PASS A NO. 4 SIEVE, MEETING THE REQUIREMENTS OF ASTM C 136. THE DRIED FINE AGGREGATE SHALL BE MIXED WITH HOT ASPHALT CEMENT AT THE PLANT AND HEATED TO APPROXIMATELY 300 DEGREES (F). APPROXIMATE MATERIAL PROPORTIONS SHALL BE 7% ASPHALT CEMENT AND 93% FINE AGGREGATE; OR 140 LBS ASPHALT TO 1,860 LBS FINE AGGREGATE PER TON.

Date: 05/01/2014

City of Dublin
ENGINEERING

STANDARD DRAWING

BRICK PAVER SIDEWALK

SHEET 1 OF 1

DRAWING NO. ***RD-12***

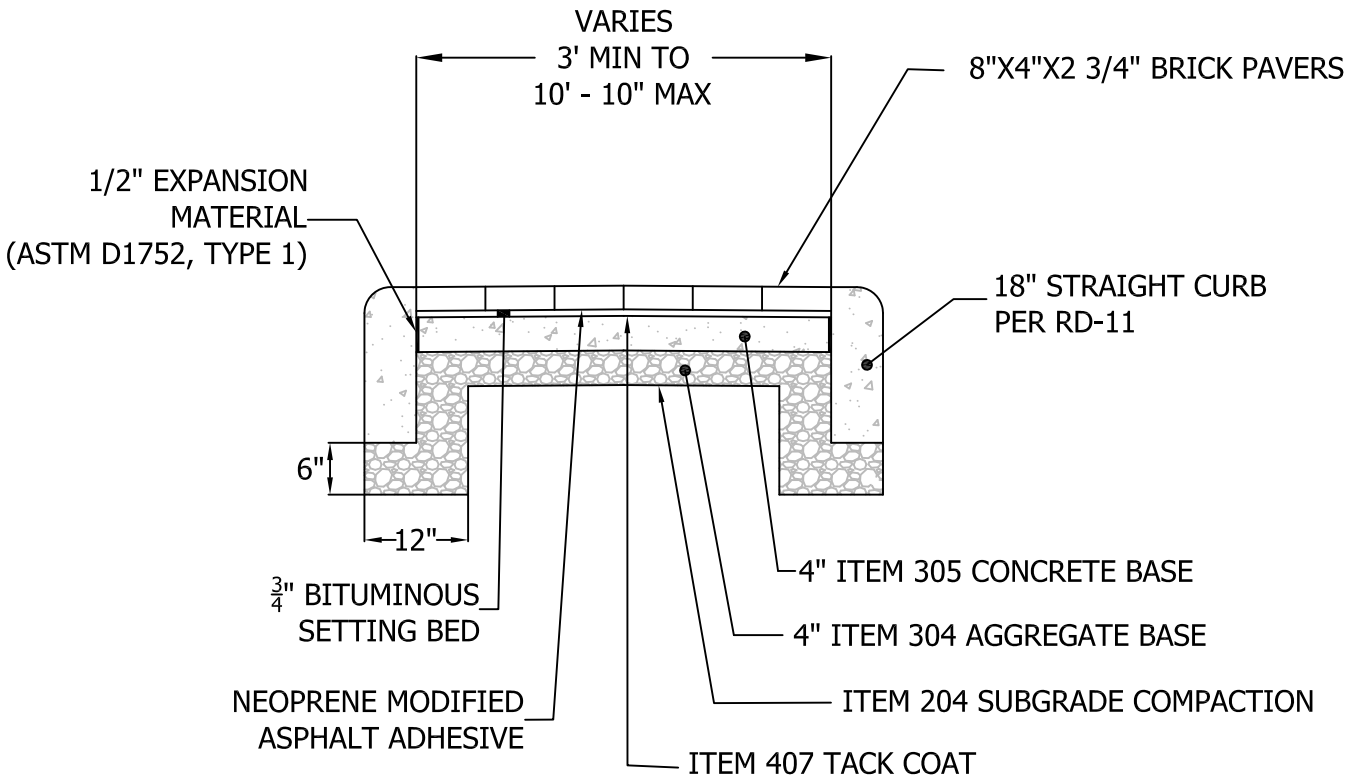

NOTES:

1.) THE PAVERS SHALL BE REGIMENTAL FULL RANGE WITH A CHAMFERED EDGE AND SPACER LUGS, 8″ x 4″ x 2 ¾″, MADE BY BELDEN BRICK COMPANY, CANTON, OHIO, LAID IN A RUNNING BOND PATTERN.

2.) ALL JOINTS SHALL BE FILLED WITH A POLYMERIC SAND. SAND SHALL BE ALLIANCE GATOR MAXX POLYMERIC SAND FOR OVERLAYS AND SLATE GREY IN COLOR OR AN APPROVED EQUAL.

3.) FURNISH NEOPRENE MODIFIED ASPHALT ADHESIVE THAT CONTAINS 2% GRADE WM1 NEOPRENE, OXIDIZED ASPHALT WITH A 150 DEGREE SOFTENING POINT (77 PENETRATION), AND 10% LONG-FIBERED INERT MATERIAL, AS SUPPLIED BY SEIDEL COMPANY, INC., NEWBURYPORT, MA, (617) 649-6740; HASTINGS PAVEMENT COMPANY, INC., LAKE SUCCESS, NY, (516) 379-3500; OR APPROVED EQUAL.

4.) FURNISH ASPHALT CEMENT CONFORMING TO ASTM D 3381, PG64-22. FINE AGGREGATE SHALL BE NATURAL SAND AND/OR STONE SAND COMPOSED OF HARD, DURABLE, UNCOATED PARTICLES, FREE FROM CLAY, SILT, ORGANIC MATERIAL, OR OTHER DELETERIOUS SUBSTANCES. ALL SAND SHALL BE UNIFORMLY GRADED AND PASS A NO. 4 SIEVE, MEETING THE REQUIREMENTS OF ASTM C 136. THE DRIED FINE AGGREGATE SHALL BE MIXED WITH HOT ASPHALT CEMENT AT THE PLANT AND HEATED TO APPROXIMATELY 300 DEGREES (F). APPROXIMATE MATERIAL PROPORTIONS SHALL BE 7% ASPHALT CEMENT AND 93% FINE AGGREGATE; OR 140 LBS ASPHALT TO 1,860 LBS FINE AGGREGATE PER TON.

Date: 05/01/2014

City of Dublin
ENGINEERING

STANDARD DRAWING

BRICK PAVER MEDIAN DETAIL

SHEET 1 OF 1

DRAWING NO. ***RD-14***

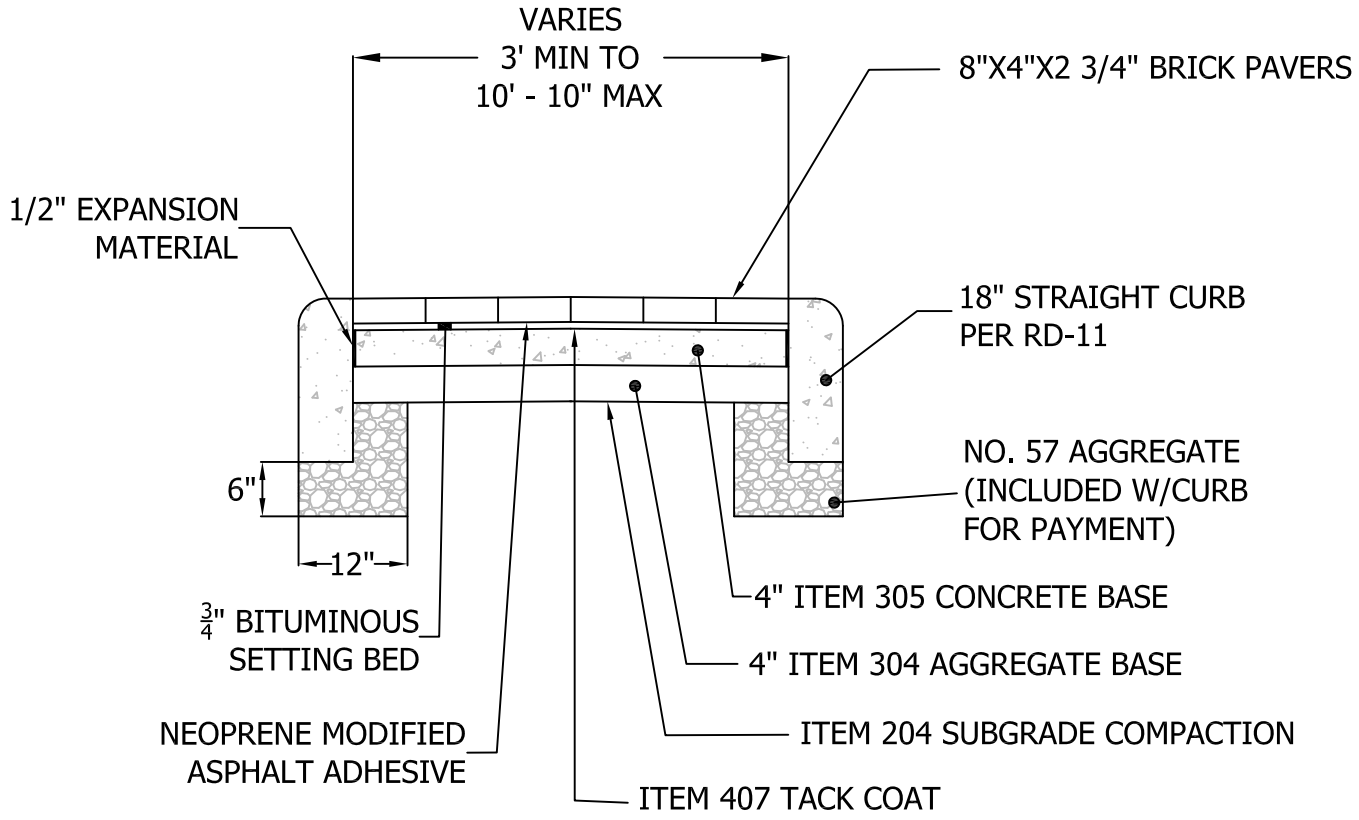

NOTES:

1.) THE PAVERS SHALL BE REGIMENTAL FULL RANGE WITH A CHAMFERED EDGE AND SPACER LUGS, 8″ x 4″ x 2 ¾″, MADE BY BELDEN BRICK COMPANY, CANTON, OHIO, LAID IN A RUNNING BOND PATTERN.

2.) ALL JOINTS SHALL BE FILLED WITH A POLYMERIC SAND. SAND SHALL BE ALLIANCE GATOR MAXX POLYMERIC SAND FOR OVERLAYS AND SLATE GREY IN COLOR OR AN APPROVED EQUAL.

3.) FURNISH NEOPRENE MODIFIED ASPHALT ADHESIVE THAT CONTAINS 2% GRADE WM1 NEOPRENE, OXIDIZED ASPHALT WITH A 150 DEGREE SOFTENING POINT (77 PENETRATION), AND 10% LONG-FIBERED INERT MATERIAL, AS SUPPLIED BY SEIDEL COMPANY, INC., NEWBURYPORT, MA, (617) 649-6740; HASTINGS PAVEMENT COMPANY, INC., LAKE SUCCESS, NY, (516) 379-3500; OR APPROVED EQUAL.

4.) FURNISH ASPHALT CEMENT CONFORMING TO ASTM D 3381, PG64-22. FINE AGGREGATE SHALL BE NATURAL SAND AND/OR STONE SAND COMPOSED OF HARD, DURABLE, UNCOATED PARTICLES, FREE FROM CLAY, SILT, ORGANIC MATERIAL, OR OTHER DELETERIOUS SUBSTANCES. ALL SAND SHALL BE UNIFORMLY GRADED AND PASS A NO. 4 SIEVE, MEETING THE REQUIREMENTS OF ASTM C 136. THE DRIED FINE AGGREGATE SHALL BE MIXED WITH HOT ASPHALT CEMENT AT THE PLANT AND HEATED TO APPROXIMATELY 300 DEGREES (F). APPROXIMATE MATERIAL PROPORTIONS SHALL BE 7% ASPHALT CEMENT AND 93% FINE AGGREGATE; OR 140 LBS ASPHALT TO 1,860 LBS FINE AGGREGATE PER TON.

Date: 05/01/2014

City of Dublin
ENGINEERING

STANDARD DRAWING

BRICK PAVER MEDIAN DETAIL

SHEET 1 OF 1

DRAWING NO. ***RD-15***

G. SCOPE OF WORK

Concrete curbing, flatwork and curb ramps, asphalt bike path resurfacing and reconstruction, storm sewer, grading.

The cost estimate for the Project is $679,000.00

IV. OWNER COMPLETED FORMS

A. OWNER EXECUTION CHECKLIST

The following list highlights and serves as a reminder of actions required to execute the Contract with the selected bidder.

Notice of Award

- ☐ Complete the form once bidder selected
- ☐ Mail form to bidder
- ☐ Collect acceptance from bidder

Notice of Award to Surety and Surety's Agent

- ☐ Complete the form once bidder selected
- ☐ Send the bond to legal counsel for double-check of validity
- ☐ Send notice form to Surety and Agent at the addresses listed on the Bond form

Bid Tabulation Sheet

- ☐ If Prevailing Wage applies, ensure that the Bid Tabulation Sheet is completed and in your Project file

Prevailing Wage

- ☐ Check the date of the Determination Letter included with the Contract Documents. If it has expired, issue new prevailing wage rates to the Contractor.

Owner/Contractor Agreement

- ☐ Have the Contractor sign the Agreement
- ☐ Have the Law Director review and sign the Agreement
- ☐ Have the Fiscal officer sign the Agreement
- ☐ Have the CITY OF DUBLIN representative sign the Agreement

Notice of Commencement

- ☐ Complete the Notice of Commencement form and put it in the Project file
- ☐ Must produce it if requested but no filing requirement

Notice to Proceed

- ☐ Issue the Notice to Proceed

Bidder's and Subcontractors' Certificate(s) of Licensure

- ☐ If applicable, Collect from Bidder if not submitted with Bid

B. NOTICE OF AWARD TO BIDDER

Date: _____

PROJECT: 2015 SHARED - USE PATH MAINTENANCE

The CITY OF DUBLIN (Owner) has considered the Bid submitted by you for the above-described work in response to the Legal Notice dated July 29, 2015.

You are hereby notified that your Bid has been accepted for items in the amount of $.

You are required by the Instructions to Bidders to execute the Contract and furnish the required documents within ten (10) calendar days from the date of this notice to you.

If you fail to execute said Contract within ten (10) days from the date of this notice, Owner may—at its discretion—exercise its rights with respect to your Bid guaranty and be entitled to such other rights as may be granted by Law.

You are required to return an acknowledged copy of this Notice of Award to the Owner.

Dated this _____ day of _____, 2015.

Sincerely,

_____
Paul A. Hammersmith P.E.
Director of Engineering / City Engineer

ACCEPTANCE OF NOTICE

Receipt of the above Notice of Award is hereby acknowledged.

Bidder_____

This _____ day of _____, 2015

By: _____

Title: _____

C. NOTICE OF AWARD TO SURETY AND SURETY'S AGENT

_____ (Surety)

_____ (Address)

_____ (City/State/Zip)

_____ (Surety's Agent)

_____ (Address)

_____ (City/State/Zip)

Date: _____

SENT BY REGULAR U.S. MAIL

RE: NOTICE OF AWARD OF CONTRACT

To Whom It May Concern:

You are notified that your principal, , has been awarded a contract for the CITY OF DUBLIN, 2015 SHARED - USE PATH MAINTENANCE project, in the amount of $_____ by the CITY OF DUBLIN, OHIO .

Sincerely,

_____

Paul A. Hammersmith P.E.
Director of Engineering / City Engineer

D. NOTICE TO PROCEED

To:

Date: _____

Project: 2015 SHARED - USE PATH MAINTENANCE

Owner: CITY OF DUBLIN, OHIO
5200 Emerald Parkway, Dublin, Ohio 43017

You are hereby notified to commence Work in accordance with the City/Contractor Agreement dated , and you are to complete the Work in the time required by the Contract Documents. Within ten (10) days from this Notice to Proceed date, you will begin physical, on-site improvements. You are required to return an acknowledged copy of this Notice to Proceed, to the Owner, indicating Acceptance of this Notice to Proceed.

_____
Paul A. Hammersmith P.E.
Director of Engineering / City Engineer

ACCEPTANCE OF NOTICE TO PROCEED

Receipt of the above NOTICE TO PROCEED is hereby acknowledged by _____, this the day of _____, 2015.

By: _____

Title: _____

E. NOTICE OF COMMENCEMENT OF PUBLIC IMPROVEMENT (O.R.C. §1311.252)

NOTICE IS HEREBY GIVEN OF THE COMMENCEMENT OF A PUBLIC IMPROVEMENT AS FOLLOWS:

1. The public improvement is identified as the CITY OF DUBLIN, 2015 SHARED - USE PATH MAINTENANCE project located at various locations within the City of Dublin.

2. The public authority and Owner responsible for the public improvement is the CITY OF DUBLIN, OHIO, 5200 Emerald Parkway, Dublin, Ohio 43017 .

3. The principal contractor(s) for the public improvement are as follows:

, .

4. The date the CITY OF DUBLIN first executed a contract with a principal contractor for this public improvement is .

5. The name and address of the representative for the CITY OF DUBLIN upon whom service may be made for the purposes of serving an affidavit pursuant to Section 1311.26 of the Ohio Revised Code is Paul A. Hammersmith P.E., Director of Engineering / City Engineer for the CITY OF DUBLIN, OHIO, 5800 Shier-Rings Road, Dublin, Ohio 43016.

_____ _____

Paul A. Hammersmith P.E. Date
Director of Engineering / City Engineer

The foregoing instrument was acknowledged before me this _____, day of _____, 20____ by Paul A. Hammersmith P.E., Director of Engineering / City Engineer for the CITY OF DUBLIN, OHIO.

Signature and Seal of person taking acknowledgement:

_____

F. PREVAILING WAGE BID TABULATION SHEET

Please print and complete this form. Keep it with your records until the contract has been awarded. Once the contract has been officially awarded, check mark which company was awarded the contract for the project and send or fax a copy to the Wage and Hour Division at 614-728-8639.

Contracting Public Authority: the CITY OF DUBLIN, OHIO		
Project Name:2015 SHARED - USE PATH MAINTENANCE		
Project No.: 15-021.0-CIP	Bid Date: August 12, 2015	Estimate: $ 679,000.00

Contract Description: ☐General ☐HVAC ☐Electrical ☐Plumbing ☐Asbestos ☐Other_____

Awarded to (check)	List of Bidding Contractors	Total Bid Amount

Submitted By

Print Name: Paul A. Hammersmith P.E.	Title: Director of Engineering / City Engineer
Telephone Number: 614-410-4625 Darren Lee, P.E.	Fax: 614-410-4699 / Darren Lee P.E.
Signature:_____ Paul A. Hammersmith, P.E.	Date:

V. ADDITIONAL PROJECT FORMS

A. PAYROLL INFORMATION

PROJECT: 2015 SHARED - USE PATH MAINTENANCE

I, _____ (Name),

_____ (Title) of _____ (Company Name), state the following:

1. That I pay or supervise the payment of the persons employed by _____ (Company Name) on the above-referenced project.

2. That during the payroll period commencing on the _____ day of _____, 2015, and ending on the _____ day of _____, 2015, all persons employed on said project have been paid the full weekly wages earned; that no rebates have been or will be made either directly or indirectly to or on behalf of said _____ (Contractor/Subcontractor) from the full weekly wages earned by such persons; and that no deductions have been made either directly or indirectly from the full wages earned by such persons, other than permissible deductions as defined in Regulations, Part 3 (29 CFR Subtitle A), issued by the Secretary of Labor under the Copeland Act, as amended (48 Stat. 948, 63 Stat. 108, 72 Stat. 967; 76 Stat. 357; 40 U.S.C. 276c), and described below:

_____

_____

_____

3. That any payrolls otherwise under this Agreement for Construction (the "Agreement") required to be submitted for the above period are correct and complete; that the wage rates for laborers or mechanics contained therein are not less than the applicable wage rates contained in the specifications as supplied by the Department of Industrial Relations or any wage determination incorporated into the Agreement; and that the classifications set forth therein for each laborer or mechanic conform with the work he performed.

4. That any apprentices employed in the above period are duly registered in a bona fide apprenticeship program registered with the Ohio Apprenticeship Council.

5. That (check applicable box):

□ a. WHERE FRINGE BENEFITS ARE PAID TO APPROVED PLANS, FUNDS, OR PROGRAMS:

In addition to the basic hourly wage rates paid to each laborer or mechanic listed in the above-referenced payroll, payments of fringe benefits listed in the Agreement have been or will be made to appropriate programs for the benefit of such employees, except as noted in Section 4 below.

□ b. WHERE FRINGE BENEFITS ARE PAID IN CASH:

Each laborer or mechanic listed in the above-referenced payroll has been paid as indicated on the payroll, and amount not less than the sum of the applicable basic hourly wage rate plus the amount of the required fringe benefits as listed in the Agreement, except as noted in Section 4 below.

c. Exceptions:

Exception (Craft):	Explanation:
_____	_____
_____	_____
_____	_____
_____	_____

Remarks:

_____

_____

_____

(Signature)

_____

(Print Name and Title)

The willful falsification of any of the above statements may subject the Contractor or Subcontractor to fines as described in Section 4115.99 of the O.R.C.

B. FINAL AFFIDAVIT OF COMPLIANCE WITH PREVAILING WAGES

PROJECT: **2015 SHARED - USE PATH MAINTENANCE**

STATE OF _____

COUNTY OF _____, SS:

I,_____,(Name of person signing the affidavit) _____ (Title) do hereby certify that the wages paid to all employees of _____ (Company Name) for all hours worked on project the CITY OF DUBLIN 2015 SHARED - USE PATH MAINTENANCE Project located at various locations within the City of Dublin during the period from _____to_____ are in compliance with the Prevailing Wage requirements of Chapter 4115 of the Ohio Revised Code. I further certify that no rebates or deductions have been or will be made, directly or indirectly, from any wages paid in connection with this project, other than those provided by law.

_____

(Signature of Affiant)

_____

(Print Name)

Sworn to and subscribed in my presence this _____ day of _____, 2015.

_____

Notary Public

The above affidavit must be executed and sworn to by the officer or agent or the Contractor/Subcontractor who supervised the payment of employees, before the CITY OF DUBLIN, OHIO will release the surety and/or make final payment due under the terms of the Agreement.

C. CONTRACTOR'S LIEN WAIVER AND RELEASE AGREEMENT

Project: **2015 SHARED - USE PATH MAINTENANCE**

The undersigned hereby acknowledges receipt of payment from the City for all Work on the Project through the date of its prior Application for Payment. The undersigned acknowledges and agrees that the terms in this Agreement shall have the same meaning as in the Contract Documents for the Project.

In return for said payment, and/or pursuant to certain contractual obligations of the undersigned, the undersigned hereby waives and releases any rights it has or may have through the date of its last Application for Payment to any and all Claims and liens related to the Project, including without limitation: Claims of payment, mechanic's liens, liens against funds, surety bond Claims, and Claims for breach of contract or unjust enrichment. The sole exception to this waiver and release is for any Claims the undersigned has made by properly and timely submitting a Claim as required by the Contract Documents. The undersigned acknowledges and agrees that this wavier and release is intended to be a comprehensive release of all Claims and liens related to the Project, including without limitation all Claims against the City, and the employees, board members, agents and representatives of any of the foregoing persons. The undersigned further certifies that this Agreement covers Claims and liens by all persons with which it did business related to the Project, including without limitation subcontractors and suppliers, through the date of its last Application for Payment. The undersigned represents that all such persons have signed an agreement in the form of this Agreement releasing any and all Claims and liens related to the Project, except for any Claims made by properly and timely submitting a Claim as required by the Contract Documents, a copy of which has been delivered to the City. The undersigned hereby represents and warrants that it has paid any and all welfare, pension, vacation, or other contributions required to be paid on account of the employment by the undersigned of any laborers on the Project.

This Agreement is for the benefit of, and may be relied upon by the City. The undersigned hereby agrees to indemnify, defend and hold harmless each of the foregoing, the Project, work or improvement, and real property from any and all Claims, or liens that are or should have been released in accordance with this Agreement.

Contractor Name:_____

Authorized Signature: _____

Title: _____

The foregoing instrument was acknowledged before me this _____, day of _____, 20____ by _____.

Signature and Seal of person taking acknowledgement:

_____

VI. PLANS/DRAWINGS

Plans and Drawing are available at http://dublinohiousa.gov/bids-and-requests-for-proposals/ when downloading the project documents on line. If you purchase a hard copy of the project documents the plans and drawings will be on the CD included in the Bid Document and 11 X 17 printed copy as well.