CITY OF DUBLIN, FRANKLIN, UNION AND DELAWARE COUNTIES, OHIO
MASS EXCAVATION & STORM SEWER PLAN
FOR
RIVIERA
2015

OHIO Utilities Protection SERVICE
Call Before You Dig
800-362-2764 or 8-1-1
www.oups.org

GRAPHIC SCALE
0 100 200 400
1 inch = 200 feet

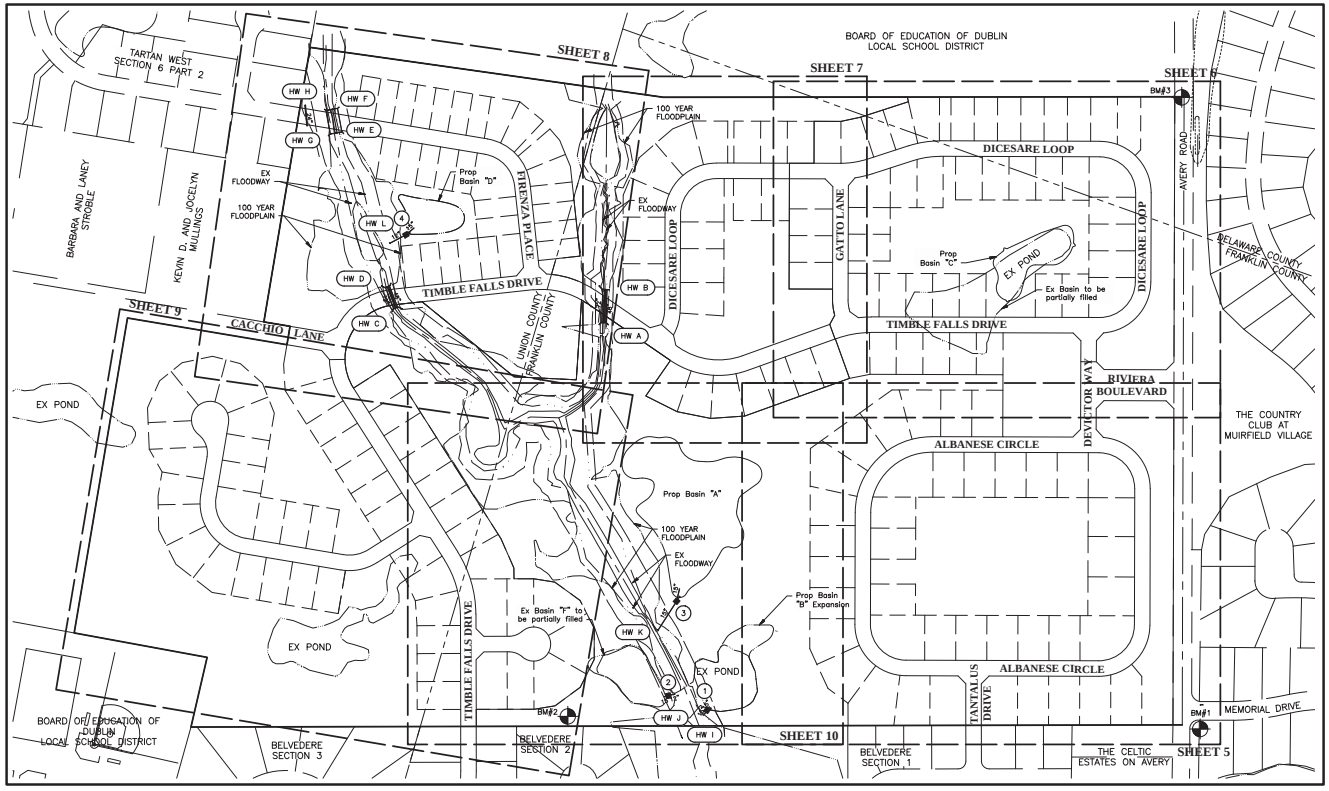

INDEX MAP
Scale: 1" = 200'

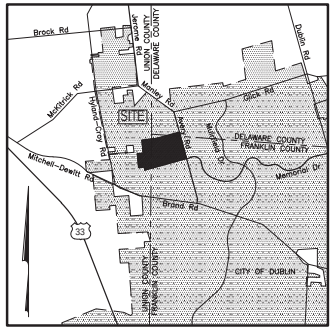

LOCATION MAP
Not to Scale

SHEET INDEX

Title Sheet 1
General Notes and Quantities 2
Erosion and Sediment Control Notes and Details 3
Erosion Control Plan 4
Grading Plan 5–10
Storm Profiles and Details 11
Bridge Plan View and Details 12
Bridge Conspan Notes and Details 13–21

BENCH MARKS
(NAVD 1988)

BM#1 Chiseled "X" on the northwest bolt of a light pole located at the southeast corner of the intersection of Avery Road and Memorial Drive.
Elevation = 939.48

BM#2 Chiseled "X" on the north rim of a sanitary sewer manhole located 215 feet northwest from the center of the Grafton End cul-de-sac.
Elevation = 924.52

BM#3 Chiseled square on the southwest corner of a storm sewer catch basin located on the west side of Avery Road, being 520 feet south of the entrance drive to Deer Run Elementary School and Willard Grizzell Middle School.
Elevation = 955.63

DEVELOPER/OWNER

Riviera Ventures, LLC
Jason Francis
3 Easton Oval, Suite 540
Columbus, Ohio 43219
Tel: (614) 418-8000
Fax: (614) 418-8030

PREPARED BY:

EMHT
Evans, Mechwart, Hambleton & Tilton, Inc.
Engineers • Surveyors • Planners • Scientists
5500 New Albany Road, Columbus, OH 43054
Phone: 614.775.4500 Toll Free: 888.775.3648
emht.com
Fax: 614-775-4805

STANDARD DRAWINGS	
CITY OF DUBLIN	CITY OF COLUMBUS
ST-01	AA-S133B MOD
ST-05	AA-S149
ST-06	AA-S150
	AA-S151
	AA-S167 MOD
	AA-S168

Registered Engineer No. _____ Date _____

APPROVED:

CITY OF DUBLIN:
Signatures below signify only concurrence with the general purposes and general location of the project and does not constitute assurance to operate as intended. All technical details remain the responsibility of the Engineer preparing the plans.

CITY ENGINEER, CITY OF DUBLIN, OHIO _____ DATE _____

REVISIONS

MARK	DATE	DESCRIPTION

CITY OF DUBLIN, FRANKLIN, UNION AND DELAWARE COUNTIES, OHIO
MASS EXCAVATION & STORM SEWER PLAN
FOR
RIVIERA
TITLE SHEET

EMHT
Evans, Mechwart, Hambleton & Tilton, Inc.
Engineers • Surveyors • Planners • Scientists
5500 New Albany Road, Columbus, OH 43054
Phone: 614.775.4500 Toll Free: 888.775.3648
emht.com

DATE: April, 2016
SCALE: As Noted
JOB NO.: 20150910
SHEET: 1/21

J:\20150910\Dwg\CivSheets\Mass Exc\1 Title Sheet.dwg Sheet By: Hammon, Kyle 4/7/2016 2:18 PM Last Printed By: Hammon, Kyle 4/8/2016 12:31 PM (No Xrefs)

J:\20150910\Dwg\04Sheets\Mass Exc\2 General Notes and Quantities.dwg, Last Saved By: kharmon, 4/7/2016 9:42 AM Last Printed By: Harmon, Kyle, 4/8/2016 12:31 PM (No Xrefs)

GENERAL NOTES

1. City of Columbus and Ohio Department of Transportation Construction and Material Specifications, current editions, and any supplements thereto (hereafter referred to as Standard Specifications), shall govern all construction items unless otherwise noted. If a conflict between specifications is found, the more strict specification will apply as decided by the City Engineer. Item Numbers listed refer to City of Columbus Item Numbers unless otherwise noted.

2. The City Engineer will not be responsible for means, methods, procedures, techniques, or sequences of construction that are not specified herein. The City Engineer will not be responsible for safety on the work site, or for failure by the Contractor to perform work according to contract documents.

3. The Developer or Contractor shall be responsible to obtain all necessary permits including but not limited to Ohio EPA Permits to Install (PTI) and Notices of Intent (NOI), Building Permits, etc.

4. The Contractor shall notify the City of Dublin Division of Engineering in writing at least 3 working days prior to beginning construction.

5. The Contractor shall be solely responsible for complying with all federal, state and local safety requirements including the Occupational Safety and Health Act of 1970. The Contractor shall exercise precaution always for the protection of persons (including employees) and property. It shall also be the sole responsibility of the Contractor to initiate, maintain and supervise all safety requirements, precautions and programs in connection with the work, including the requirements for confined spaces per 29 CFR 1910.146.

6. Following completion of construction of the site improvements and before requesting occupancy, a proof survey shall be provided to the Division of Engineering that documents "as-built" elevations, dimensions, slopes and alignments of all elements of this project. The proof survey shall be prepared, signed and submitted by the Professional Engineer who sealed the constructions drawings.

7. The Contractor shall restrict construction activity to public right-of-way and areas defined as permanent and/or temporary construction easements, unless otherwise authorized by the City Engineer.

8. The Contractor shall carefully preserve bench marks, property corners, reference points, stakes and other survey reference monuments or markers. In cases of willful or careless destruction, the Contractor shall be responsible for restorations. Resetting of markers shall be performed by an Ohio Professional Surveyor as approved by the City Engineer.

9. Non-rubber tired vehicles shall not be moved on or across public streets or highways without the written permission of the City Engineer.

10. The Contractor shall restore all disturbed areas to equal or better condition than existed before construction. Drainage ditches or water courses that are disturbed by construction shall be restored to the grades and cross-sections that existed before construction.

11. Tracking or spilling mud, dirt or debris upon streets, residential or commercial drives, sidewalks or bike paths is prohibited according to Section 97.38 of the Dublin Code of Ordinances. Any such occurrence shall be cleaned up immediately by the Contractor at no cost to the City. If the Contractor fails to remove said mud, dirt, debris, or spillage, the City reserves the right to remove these materials and clean affected areas, the cost of which shall be the responsibility of the Contractor.

12. Disposal of excess excavation within Special Flood Hazard Areas (100-year floodplain) is not permitted.

13. All signs, landscaping, structures or other appurtenances within right-of-way disturbed or damaged during construction shall be replaced or repaired to the satisfaction of the City Engineer. The cost of this work shall be the responsibility of the Contractor.

14. All field tile broken or encountered during excavation shall be replaced or repaired and connected to the public storm sewer system as directed by the City Engineer. The cost of this work shall be the responsibility of the Contractor.

15. All precast concrete products shall be inspected at the location of manufacture. Approved precast concrete products will be stamped or have such identification noting that inspection has been conducted by the City of Columbus. Precast concrete products without proof of inspection shall not be approved for installation.

16. Backfill within a 1:1 influence line of existing structures (houses, garages, etc.) or public infrastructure (pavement, curbs, sidewalks, bike paths, etc.) shall be compacted granular backfill according to Item 912 of the Standard Specifications or Flowable CDF, Type III according to Item 613. Item 911 of the Standard Specifications may be used elsewhere.

17. The Contractor shall submit a copy of the approved construction drawings and a list of proposed precast concrete product manufacturers to the City of Columbus Construction Inspection Division before commencing construction.

    Send the information to the following address:

    Construction Inspection Division
    City of Columbus
    1800 East 17th Avenue
    Columbus, Ohio 43219

    Send a copy of the transmittal letter to the following address:

    Division of Engineering
    City of Dublin
    5800 Shier Rings Road
    Dublin, Ohio 43016

18. All trenches within public right-of-way shall be backfilled according to the approved construction drawings or securely plated during nonworking hours. Trenches outside these areas shall be backfilled or shall be protected by approved temporary fencing or barricades during nonworking hours. Clean-up shall follow closely behind the trenching operation.

19. All trees within the construction area not specifically designated for removal shall be preserved, whether shown or not shown on the approved construction drawings. Trees to be preserved shall be protected with high visibility fencing placed a minimum 15 feet from the tree trunk. Trees 6 -inches or greater at DBH (Diameter Breast Height) must be protected with fencing placed at the critical root zone or 15 feet, whichever is greater. Trees not indicated on the approved construction drawings for removal may not be removed without prior approval of the Division of Engineering.

20. Conduit must be directionally bored across streets instead of open cut, unless specifically approved by the City Engineer. Use of pneumatic air ram devices is not permitted. Permits to construct in the right-of-way of existing streets must be obtained from the City of Dublin Division of Engineering before commencing construction. Should open cutting of existing pavement be permitted, Controlled Density Backfill (Type III) shall be used in place of compacted granular backfill, according to Item 613 of the Standard Specifications.

21. The Contractor shall be responsible for the condition of trenches within the right-of-way and public easements for a period of one year from the final acceptance of the work, and shall make any necessary repairs at no cost to the City.

22. Pavements shall be cut in neat, straight lines the full depth of the existing pavement, or as required by the City Engineer. Pavement replacement shall be conducted according to City of Columbus Standard Drawing 1441 Dr. A and applicable City of Dublin standard drawings. The replacement of driveways, handicapped ramps, sidewalks, bike paths, parking lot pavement, etc. shall be provided according to the approved construction drawings and City of Dublin standard construction drawings.

23. Tree trimming within the construction zone is to be completed by a certified Arborist. At the completion of the project the Arborist is to return and trim any broken branches as needed.

24. Any modification to the work shown on drawings must have prior written approval by the City Engineer, City of Dublin.

25. All inlets shall be channelized.

26. Park areas shall be fine-graded and seeded with the following mixture:
    Improved Kentucky Bluegrass, 40% of weight (2 varieties in equal parts)
    Improved Perennial Rye, 60% of weight (2 varieties in equal parts)
    Germination Rate: 85%
    Application Rate: 7 lbs per 1000 sq ft or as directed by the Division of Parks & Recreation, City of Dublin, Ohio.

27. Traffic control and other regulatory signs shall be Type S with a square post anchor base installation and meet all requirements of ODOT TC-41.20 and applicable City of Dublin specifications.

28. Street signs shall meet all City of Dublin specifications with lettering colored in white displayed over a brown background. Sign tubing shall be brown in color and conform with the Type S, square post anchor base installation requirements of ODOT TC-41.20.

UTILITIES

1. The following utilities are known to be located within the limits of this project:

    Columbia Gas of Ohio
    Attn. Tammy Schmid
    200 Civic Center Dr., 4th Floor
    Columbus, Ohio 43215
    1-800-440-6111

    American Electric Power
    Robin Hand
    Engineering Liaison Coordinator
    850 Tech Center Drive
    Gahanna, Ohio 43230-6605
    (614) 883-6829

    City of Dublin Division of Engineering
    Paul Hammersmith, P.E.
    5800 Shier Rings Road
    Dublin, Ohio 43016
    (614) 410-4600

    Time Warner Cable
    Kevin Rich
    1266 Dublin Road
    Columbus, Ohio 43215
    (614) 481-5263

    City of Columbus Division of Water
    910 Dublin Road, 2nd Floor
    Columbus, Ohio 43215
    (614) 645-7788

    Ohio Edison
    Gary Smith
    1040 South Prospect Street
    Marion, Ohio 43302
    (740) 382-7104

    Verizon
    Bill Muether / Randy Brooks
    550 Leader Street
    Marion, Ohio 43302
    (740) 383-0527

    Wide Open West
    Ken Holderfield
    Engineering Manager
    3675 Corporate Drive
    Columbus, Ohio 43231
    (614) 236-3922

2. The Contractor shall give notice of intent to construct to Ohio Utilities Protection Service (telephone number 800-362-2764), Producer's Underground Protection Service (telephone number 614-587-0486), and to owners of underground utilities that are not members of a registered underground protection service. Notice shall be given at least 2 working days before start of construction.

3. The identity and locations of existing underground utilities in the construction area have been shown on the approved construction drawings as accurately as provided by the owner of the underground utility. The City of Dublin and the City Engineer assumes no responsibility for the accuracy or depths of underground facilities shown on the approved construction drawings. If damage is caused, the Contractor shall be responsible for repair of the same and for any resulting contingent damage.

4. Location, support, protection and restoration of all existing utilities and appurtenances, whether shown or not shown on the approved construction drawings, shall be the responsibility of the Contractor.

5. When unknown or incorrectly located underground utilities are encountered during construction, the Contractor shall immediately notify the owner and the City Engineer.

6. Public street lighting may be in the vicinity of this project. Contact the City of Dublin, Division of Engineering at 410-4637, two days prior to beginning work.

TRAFFIC CONTROL

1. Traffic control shall be furnished, erected, maintained, and removed by the Contractor according to Ohio Manual of Uniform Traffic Control Devices (OMUTCD), current edition.

2. All traffic lanes of public roadways shall be fully open to traffic from 7:00 AM to 9:00 AM and from 4:00 PM to 6:00 PM unless authorized differently by the City Engineer. At all other hours the Contractor shall maintain minimum one-lane two-way traffic. Uniformed, off-duty police officers shall replace flagmen designated by the OMUTCD, and shall be present whenever one-lane, two-way traffic control is in effect. Police cruisers may be required as directed by the City Engineer.

3. If the City Engineer determines proper provisions for traffic control are not being provided by the Contractor, the City Engineer shall assign uniformed, off-duty police officers to the project at no cost to the City.

4. Steady-burning, Type "C" lights shall be required on all barricades, drums, and similar traffic control devices in use at night.

5. Access from public roadways to all adjoining properties for existing residents or businesses shall be maintained throughout the duration of the project for mail, public water and sanitary sewer service, and emergency vehicles. The Contractor shall provide a traffic control plan detailing the proposed maintenance of traffic procedures. The traffic control plan must incorporate any traffic control details contained herein. The traffic control plan proposed by the Contractor must be approved by the City Engineer prior to construction.

EROSION AND SEDIMENT CONTROL

1. The Contractor or Developer is responsible for submitting a Notice of Intent (NOI) to be reviewed and approved by the Ohio EPA. The NOI must be submitted to OEPA 45 days prior to the start of construction and may entitle coverage under the Ohio EPA General Permit for Stormwater Discharges associated with construction activity. A project location map must be submitted with the NOI. A sediment and erosion control plan must be submitted to the City Engineer for approval if a sediment and erosion control plan has not already been included with the approved construction drawings. This plan must be made available at the project site at all times. The design of erosion control systems shall follow the requirements of Ohio EPA, Item 207 of Ohio Department of Transportation Standard Specifications, and the City Engineer. An individual NPDES Stormwater Discharge Permit may be required. The Contractor shall be considered the permittee.

2. The Contractor shall provide sediment control at all points where storm water runoff leaves the project, including waterways, overland sheet flow, and storm sewers.

3. Accepted methods of providing erosion/sediment control include but are not limited to: sediment basins, silt filter fence, aggregate check dams, and temporary ground cover. Hay or straw bales are not permitted.

4. The Contractor shall provide adequate drainage of the work area at all times consistent with erosion control practices.

5. Disturbed areas that will remain unworked for 14 days or more shall be seeded or protected within seven calendar days of the disturbance. Other sediment controls that are installed shall be maintained until vegetative growth has been established. The Contractor shall be responsible for the removal of all temporary sediment devices at the conclusion of construction but not before growth of permanent ground cover.

BLASTING (If Permitted)

1. The Contractor must obtain a blasting permit from Washington Township Fire Department prior to blasting for rock excavation. The Contractor shall submit blasting reports upon completion of blasting to the City Engineer, the Owner, and the Owner's engineer. Top of rock elevations shall be shown on "as-built" construction drawings.

SANITARY SEWERS NOTES 1-20 DELETED

WATER LINE NOTES 1-17 DELETED

STORM SEWERS

1. All storm water detention and retention areas and major flood routing swales shall be constructed to finish grade and hydro-seeded and hydro-mulched according to Items 203 and 659 of the Standard Specifications.

2. Where private storm sewers connect to public storm sewers, the last run of private storm sewer connecting to the public storm sewer shall be Reinforced Concrete Pipe conforming to ASTM Designation C76, Wall B, Class IV for pipe diameters 12 inches to 15 inches, Class III for 18 inches to 24 inch pipes, and 27 inches and larger pipe shall be Class II, unless otherwise shown on the approved construction drawings. Inspection is required by the City of Dublin's Division of Engineering.

3. Granular backfill shall be compacted granular material according to Item 912 of the Standard Specifications or Controlled Density Backfill according to Item 613, Type III of the Standard Specifications as directed by the City Engineer.

4. All storm sewers shall be Reinforced Concrete Pipe conforming to ASTM Designation C76, Wall B, Class IV for pipe diameters 12 inches to 15 inches, Class III for 18 inches to 24 inch pipes, and 27 inches and larger pipe shall be Class II, unless otherwise shown on the approved construction drawings.

5. Headwalls and endwalls shall be required at all storm sewer inlets or outlets to and from stormwater management facilities. Natural stone and/or brick approved by the City Engineer shall be provided on all visible headwalls and/or endwalls and other exposed concrete surfaces. Surfaces to be acid washed before approval of stone facing.

6. Storm inlets or catch basins shall be channelized and have bicycle safe grates. Manhole Lids shall include City of Dublin logo and all Curb Inlet and Catch Basin grates shall include engraved lettering: "Dump No Waste; Drains to River".

7. Storm sewer outlets greater than 18 inches in diameter accessible from stormwater management facilities or watercourses shall be provided with safety grates, as approved by the City Engineer.

MAIL DELIVERY

1. The Contractor shall be responsible to ensure that U.S. Mail delivery within the project limits is not disrupted by construction operations. This responsibility is limited to relocation of mailboxes to a temporary location that will allow the completion of the work and shall also include the restoration of mailboxes to their original location or approved new location. Any relocation of mailbox services must be first coordinated with the US Postal Service and the homeowner.

2. Before relocating any mailboxes, the Contractor shall contact the U.S. Postal Service and relocate mailboxes according to the requirements of the Postal Service.

USE OF FIRE HYDRANTS

1. The Contractor shall make proper arrangements with the Dublin Service Department and the Columbus Division of Water for the use of fire hydrants when used for work performed under this contract and provide the city of Dublin a copy of the Hydrant Usage Permit obtained from the City of Columbus. The Contractor shall also send copies of permits obtained from Dublin and Columbus to the Washington and/or Perry Township Fire Department. Permits shall be kept at the construction site at all times.

2. Before the final estimate is paid, the Contractor shall submit a letter from the City of Columbus Division of Water to the City Engineer stating that the Contractor has returned the Siamese Valve to the City of Columbus and has paid all costs arising from the use of the fire hydrants.

HIGH DENSITY POLYETHYLENE (HDPE)

1. High Density Polyethylene (HDPE) corrugated pipe with integrally formed smooth interior wall, ADS N-12 or approved equal, is an approved alternate to reinforced concrete pipe in paved and non-paved areas. This includes applications inside the right-of-way.

2. HDPE pipe joints shall be made using watertight couplers with "O"-ring gasket, ADS WT of approved equal, where rubber "O"-ring gasket (ASTM C-361) pipe is required on approved constructions plans or within contract documents. All other pipe shall have a bell and spigot joint with rubber gasket meeting ASTM F477.

3. All bedding material shall be in accordance with City of Columbus Standard Construction Drawing AA-S149.

4. Backfill material shall be placed in accordance with Item 901.17 of the City of Columbus Construction Material Specifications (CMS).

5. Height of cover shall be in accordance with the Ohio Department of Transportation (ODOT) Location and Design (L&D) Manual, Volume Two, Section 1008.3.1.

6. All HDPE pipe shall be mandrel tested in accordance with City of Columbus Item 901.21, with the exception that the waiting period prior to testing shall be 30 days.

7. For any and all installations requiring the minimization of trench water migration, anti-seep collars shall be installed in accordance with the ODOT L&D Manual, Volume Two Section 1117.3.1.2 and ODOT Standard Hydraulic Construction Drawing WQ-1.2.

SOILS REPORT

1. A Subsurface Investigation Report has been prepared by Geotechnical Consultants, Inc. (GCI Project No. 13-G-17227, dated 3/22/2013) for this project. All recommendations in this report unless otherwise specified herein shall be followed. Copies of this report are available from the Developer.

ESTIMATE OF QUANTITIES

The contractor shall be solely responsible for determining the required bid quantities necessary for the completion of the plan improvements.

ITEM	QUANTITY	UNIT	DESCRIPTION
			SITE
201	Lump	SUM	Clearing & Grubbing
202	Lump	SUM	Structures Removed
			STORM SEWER
601	54	CY	Rock Channel Protection Type "C" w/Filter Fabric
604	4	Each	Headwall (AA-S167-Modified) w/Stone Facing on Exposed Surfaces
604	6	Each	Headwall (AA-S168) w/Stone Facing on Exposed Surfaces
901	58	LF	12" Storm Pipe
901	239	LF	15" Storm Pipe
901	66	LF	24" Storm Pipe
901	182	LF	48" Storm Pipe
901	182	LF	72" Storm Pipe
901	Lump	Sum	Con-Span Bridge System w/Headwalls
SPEC	4	Each	Water Quality Outlet Structure, See Detail Sheet 3
			SEDIMENT CONTROL
207	7729	LF	Silt Fence
207	Lump	Sum	Orange Construction Fence (Tree Protection)
207	4	Each	Inlet Protection (Dandy Bag)
207	1	CY	Construction Entrance
SPEC	3	Each	Temporary Skimmer, See Detail Sheet 3
SPEC	9	Each	Rock Check Dam

REVISIONS

MARK	DATE	DESCRIPTION

CITY OF DUBLIN, FRANKLIN, UNION AND DELAWARE COUNTIES, OHIO
MASS EXCAVATION & STORM SEWER PLAN
FOR
RIVIERA

GENERAL NOTES AND QUANTITIES

EMH&T
Evans, Mechwart, Hambleton & Tilton, Inc.
Engineers • Surveyors • Planners • Scientists
5500 New Albany Road, Columbus, OH 43054
Phone: 614.775.4500 Toll Free: 888.775.3648
emht.com

DATE: April, 2016

SCALE: None

JOB NO.: 20150910

SITE DATA

OWNER/DEVELOPER	MI Homes of Central Ohio, LLC Attn. Mr. Jason Francis 3 Easton Oval, Suite 540 Columbus, Ohio 43219 Phone: 614-418-8000 Fax: 614-418-8030
PLAN DESIGNER:	EMH&T, Inc. 5500 New Albany Road Columbus, Ohio 43054 Phone: 614-775-4500 Fax: 614-775-4800
DEVELOPMENT TYPE:	Single Family
SITE ACREAGE:	26.547 Acres
DISTURBED ACREAGE:	20.859 Acres
EXISTING SITE AREA:	The existing site consists of a golf course.
ADJACENT AREAS:	The site is bordered by Willard Grizzell Middle School, to the south by single-family residential development, to the east by Avery Road, and to the west by Dublin Jerome High School.
STORM WATER	Site stormwater runoff drains to proposed wet basins A, B, D, and F before discharging to Tributary I-2.
STORM WATER QUALITY:	Permanent water quality to meet OEPA standards is being provided by Proposed Retention Basins.

SEQUENCE OF CONSTRUCTION

1. Ensure that a copy of the NOI, Ohio EPA approval letter, and the SWPPP are available on-site during working hours.
2. Establish the construction exit, concrete washout pit, temporary parking, and staging area.
3. Install perimeter sediment fence as indicated on the erosion and sediment control plan.
4. Excavate the proposed Basins, install the permanent Outlet Structures, complete with the temporary risers and skimmers.
5. Isolate existing Basins "B" and "F" from the stream. The basin shall be isolated from the stream in a manner not to place fill in the stream channel or to allow erodible material to enter into the stream channel. Once the existing basin footprint has been isolated from the stream channel, commence with basin dewatering activities as needed to construct the proposed basins. The contractor shall dewatering the basins in a manner not to result in the discharge of muddy water into the stream. Pumped water can be directed into geotextile bags or designated sediment traps. Once water has been pumped down begin earthwork operations within Basin "B" and "F" and install basin outlet structures complete with skimmers.
6. Use temporary Diversion Channels to route runoff to the sediment Basins prior to the Storm Sewer installation.
7. Install utilities and storm sewer inlet protection.
8. Commence with construction of the single family homes.
9. Disturbed areas shall be stabilized according to temporary and permanent seeding requirements.
10. Temporary sediment controls shall be removed upon permanent stabilization of the site.

TEMPORARY AND PERMANENT SEEDING

The limits of seeding and mulching are as shown within the plan as indicated by the limits of disturbance. All areas not designated to be seeded shall remain under natural ground cover. Those areas disturbed outside the seeding limits shall be seeded and mulched at the Contractor's expense.

TEMPORARY SEEDING

Any area which will be left dormant (undisturbed) for more than 14 days shall be seeded within 7 days of terminated work. Disturbed areas within 50 feet of a stream, first order or larger, shall be stabilized within 2 days of inactivity. Temporary seeding consists of seedbed preparation and application of seed, fertilizer, and water. Soil test is recommended to determine proper application rate of fertilizer and if lime is necessary.

Fertilizer 12-12-12	25 lb/1000 sq. ft.
Straw Mulch	2 tons/acre
Water	300 G/1000 sq. ft.

TEMPORARY SEEDING			
SEEDING DATES	SPECIES	lb./1000 sq. ft.	Per acre
March 1 to August 15	Oats	3	4 bushel
	Tall Fescue	1	40 lb.
	Annual Ryegrass	1	40 lb.
	Perennial Ryegrass	1	40 lb.
	Tall Fescue	1	40 lb.
	Annual Ryegrass	1	40 lb.
August 16 to November 1	Rye	3	2 bushel
	Tall Fescue	1	40 lb.
	Annual Ryegrass	1	40 lb.
	Wheat	3	2 bushel
	Tall Fescue	1	40 lb.
	Annual Ryegrass	1	40 lb.
	Perennial Ryegrass	1	40 lb.
	Tall Fescue	1	40 lb.
	Annual Ryegrass	1	40 lb.
Nov. 1 to Spring Seeding	Use mulch only, sodding practices or dormant seeding		

PERMANENT SEEDING

Any area that is at final grade shall be seeded within 7 days of terminated work. Permanent seeding consists of seedbed preparation and application of seed, fertilizer, and water. Soil test is recommended to determine proper application rate of fertilizer and if lime is necessary. Ideal conditions for permanent seeding are from March 1-May 31 and August 1-October 15.

PERMANENT SEEDING		
SEED MIX	SEEDING RATE lb/1000 sq.ft.	NOTES
GENERAL USE		
Creeping Red Fescue	1.6	
Kentucky Bluegrass	1.6	
Annual Ryegrass	0.8	

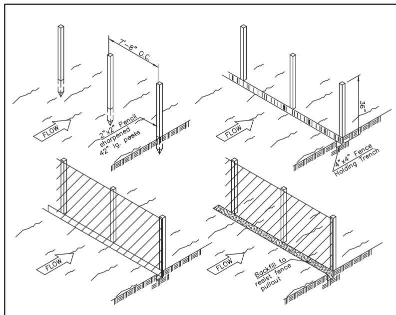

Silt fence fabric shall be ODOT, Type C Geotextile fabric or the equivalent to the following properties:

MATERIAL PROPERTIES

Maximum Tensile Strength	120 lbs
Maximum Elongation At 60 Lbs.	50%
Minimum Puncture Strength	50 lbs
Minimum Tear Strength	40 lbs
Minimum Burst Strength	200 psi
Apparent Opening Size	0.84 mm
Minimum Permittivity	1 x 10 -2 sec.-1
Ultraviolet Exposure Strength Retention	70%

Silt fence shall be installed by the Owner and maintained by the Site Contractor.

SILT FENCE:
This sediment barrier utilizes standard strength or extra strength synthetic filter fabrics. It is designed for situations in which only sheet or overland flows are expected. Material Properties are listed in the provided table.

1. The height of a silt fence shall not exceed 36-inches (higher fences may impound volumes of water sufficient to cause failure of the structure).
2. The filter fabric shall be purchased in a continuous roll cut to the length of the barrier to avoid the use of joints. When joints are necessary, filter cloth shall be spliced together only at a support post, with a minimum of a 6 inch overlap, and securely sealed.
3. Posts shall be spaced a maximum of 10 feet apart at the barrier location and driven securely into the ground (minimum of 12-inches). Wood posts will be a minimum of 32" long When extra strength fabric is used without the wire support fence, post spacing shall not exceed 6 feet.
4. A trench shall be excavated approximately 4-inches wide and 6-inches deep along the line of posts and upslope from the barrier.
5. When standard strength filter fabric is used, a wire mesh support fence shall be fastened securely to the upslope side of the posts using heavy duty wire staples at least 1-inch long, tie wires or hog rings. The wire shall extend into the trench a minimum of 2-inches and shall not extend more than 36-inches above the original ground surface.
6. The standard strength filter fabric shall be stapled or wired to the fence, and 8-inches of the fabric shall be extended into the trench. The fabric shall not extend more than 36-inches above the original ground surface. Filter fabric shall not be stapled to existing trees.
7. When extra strength filter fabric and closer post spacing are used, the wire mesh support fence may be eliminated. In such a case, the filter fabric is stapled or wired directly to the posts with all other provisions of Item No. 6 applying.
8. The trench shall be backfilled and soil compacted over the filter fabric.
9. Silt fences shall be removed when they have served their useful purpose, but not before the upslope area has been permanently stabilized.
10. To prevent water ponded by the silt fence from flowing around the ends, each end shall be constructed upslope so that the ends are at a higher elevation.

MAINTENANCE:
Silt fences and filter barriers shall be inspected immediately after each rainfall and at least daily during prolonged rainfall. Any required repairs shall be made immediately.

Should the fabric on a silt fence or filter barrier decompose or become ineffective prior to the end of the expected usable life and the barrier is still necessary, the fabric shall be replaced promptly.

Sediment deposits should be removed after each storm event. They must be removed when deposits reach approximately one-half the height of the barrier.

Any sediment deposits remaining in place after the silt fence or filter barrier is no longer required shall be dressed to conform with the existing grade, prepared and seeded.

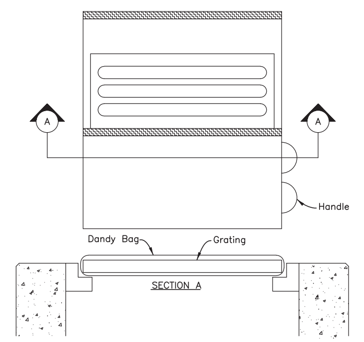

Installation: Stand grate on end. Place Dandy Bag over grate. Flip grate over so that open end is up. Pull up slack. Tuck flap in. Be sure end of grate is completely covered by flap or Dandy Bag will not fit properly. Holding handles, carefully place Dandy Bag with grate inserted into Catch Basin frame so that red dot on the top of the Dandy Bag is visible.

Maintenance: After silt has dried, remove it from the surface of Dandy Bag with broom.

For Structures - 1, 2, 3 and 4

DANDY BAG DETAIL

Not To Scale

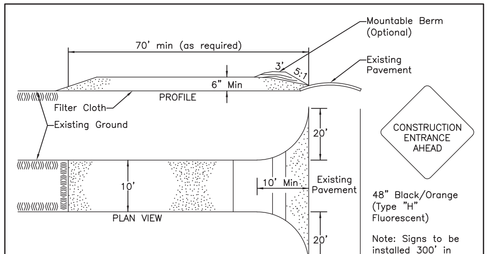

CONSTRUCTION SPECIFICATIONS:
1. Stone Size - Use 2" stone, or reclaimed or recycled concrete equivalent.
2. Length - 70' minimum
3. Thickness - Not less than six (6) inches.
4. Width - Fifteen (15) foot minimum, but not less than the full width at points where ingress or egress occurs.
5. Filter Cloth - will be placed over the entire area prior to placing of stone.
6. Surface Water - All surface water flowing or diverted toward construction entrances shall be piped across the entrance. If piping is impractical, a mountable berm with 5:1 slopes will be permitted.
7. Maintenance - The entrance shall be maintained in a condition which will prevent tracking or flowing of sediment onto public right-of-way. This may require periodic top dressing with additional stone as conditions demand and repair and/or cleanout of any measure used to trap all sediment spilled, dropped, washed or tracked onto public rights of way must be removed immediately.
8. Washing - Wheels shall be cleaned to remove sediment prior to entrance onto public right-of-ways. When washing is required, it shall be done on an area stabilized with stone and which drains into an approved sediment trapping device.
9. Periodic inspection and needed maintenance shall be provided after each rain.

STABILIZED CONSTRUCTION ENTRANCE

Not To Scale

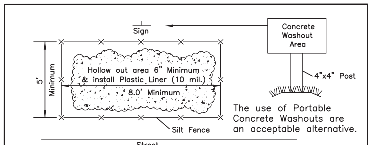

CONCRETE WASHOUT AREA

Not To Scale

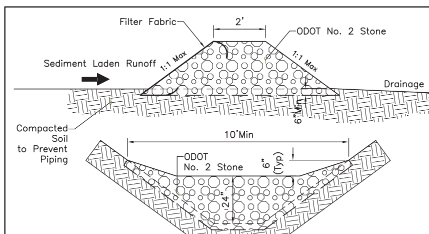

MAINTENANCE
Rock check dams shall be inspected immediately after each rainfall and at least daily during prolonged rainfall.

Close attention shall be paid to the repair of damaged check dams, end runs and undercutting beneath dams. necessary repairs to check dams shall be accomplished promptly.

Sediment deposits should be removed after each rainfall. they must be removed when the level of deposition reaches approximately one-half the height of the barrier.

Any sediment deposits remaining in place after the aggregate is no longer required shall be dressed to conform to the existing grade, prepared and seeded.

ROCK CHECK DAM

Not To Scale

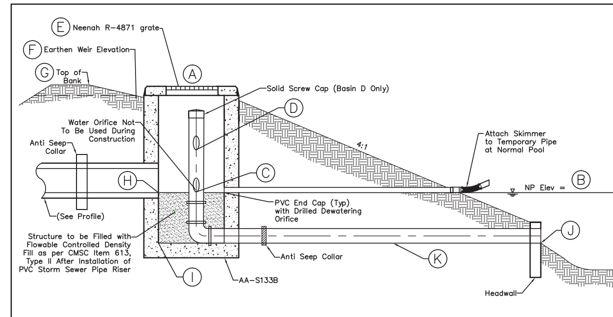

Catch Basin No. (A)	Normal Pool Elev (B)	Stage 1 Outlet (C)	Stage 2 Outlet (D)	Grate Top of Casting (E)	Earthen Weir (F)	Top of Bank (G)	Outlet Pipe (H)	Structure Invert (I)	Inlet Pipe Invert (J)	Inlet Pipe Size (K)
3 (Basin A)	924.50	Three (3) 5" orifices @ 924.50	Open Top of 15" Riser Pipe @ 925.75	927.50	20' @ 927.00	928.00	15" @ 1.26% Inv=924.50	920.50	920.50	41.0'~15"
1 (Basin B)	922.20	Three (3) 6" orifices @ 922.20	Open Top of 15" Riser Pipe @ 923.00	924.50	50' @ 924.00	925.00	15" @ 0.32% Inv=922.20	918.50	918.50	13.5'~15"
4 (Basin D)	932.70	6.5" orifice @ 932.70	6.5" orifice @ 933.60	935.25	50' @ 936.00	937.00	12" @ 0.50% Inv=932.70	929.50	929.50	34.0'~15"
2 (Ex Basin F)	922.50	4.5" orifice @ 922.50	Open Top of 12" Riser Pipe @ 923.25	924.25	50' @ 924.50	925.00	12" @ 0.48% Inv=922.50	920.00	920.00	14.0'~12"

TEMPORARY SEDIMENT CONTROL STRUCTURE/ PERMANENT OUTLET STRUCTURE

Not To Scale

SKIMMER SPECIFICATIONS			
Basin	Skimmer Diameter Size (Inches)	Wire Stop Elev. (Feet)	Skimmer Pipe Length (Feet)
Wet Basin A	8"	925.40	10'
Wet Basin B	4"	922.80	10'
Wet Basin D	4"	933.50	10'

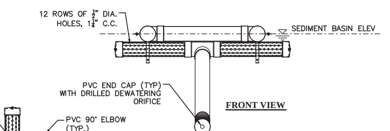

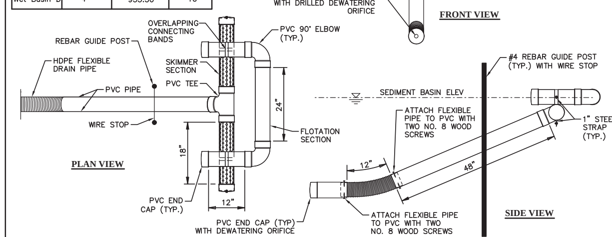

TEMPORARY SKIMMER

TEMPORARY SEDIMENT CONTROL BASIN DATA						
BASIN	TRIBUTARY ACREAGE	DISTURBED ACREAGE	REQUIRED BASIN DEWATERING VOLUME (67 CY/AC)	PROVIDED BASIN DEWATERING VOLUME	REQUIRED SEDIMENT STORAGE VOLUME (37 CY DISTURBED AC)	PROVIDED SEDIMENT STORAGE VOLUME
A	63.17 acres	63.17 acres	2.62 ac-ft	2.62 ac-ft	1.45 ac-ft	17.89 ac-ft
B	11.12 acres	11.12 acres	0.46 ac-ft	0.46 ac-ft	0.26 ac-ft	3.99 ac-ft
D	7.94 acres	7.94 acres	0.33 ac-ft	0.33 ac-ft	0.18 ac-ft	1.76 ac-ft

Required Dewatering Volume Drawdown > 48 Hrs.

NOTES:

1. Sediment basins shall be constructed and operational before upslope land disturbance begins.
2. SEDIMENT CLEANOUT:
   Sediment shall be removed and the sediment basin restored to its original dimensions when the sediment has filled to one-half the sediment storage zone. Sediment removed from the basin shall be placed so that it will not erode and stabilized similar to other fill material placed on the site.
3. FINAL REMOVAL:
   The sediment control structure shall be removed only after the upstream drainage area is stabilized, and upon approval from Franklin SWCD. Dewatering and removal shall not cause sediment to be discharged. Accumulated sediment within the proposed basin shall be removed upon completion of construction. Install the permanent riser pipe within the catch basin structure.

REVISIONS

MARK | DATE | DESCRIPTION

CITY OF DUBLIN, FRANKLIN, UNION AND DELAWARE COUNTIES, OHIO
MASS EXCAVATION & STORM SEWER PLAN
FOR
RIVIERA
EROSION AND SEDIMENT CONTROL NOTES AND DETAILS

EMH&T
Evans, Mechwart, Hambleton & Tilton, Inc.
Engineers • Surveyors • Planners • Scientists
5500 New Albany Road, Columbus, OH 43054
Phone: 614.775.4500 Toll Free: 888.775.3648
emht.com

DATE: April, 2016

SCALE: As Noted

JOB NO. 20150910

J:\20150910\Dwg\04Sheets\Mass Exc\3 Erosion and Sediment Control Notes and Details.dwg, Last Saved By: kharmon, 4/7/2016 9:18 AM Last Printed By: Harmon, Kyle, 4/8/2016 12:31 PM (No Xrefs)

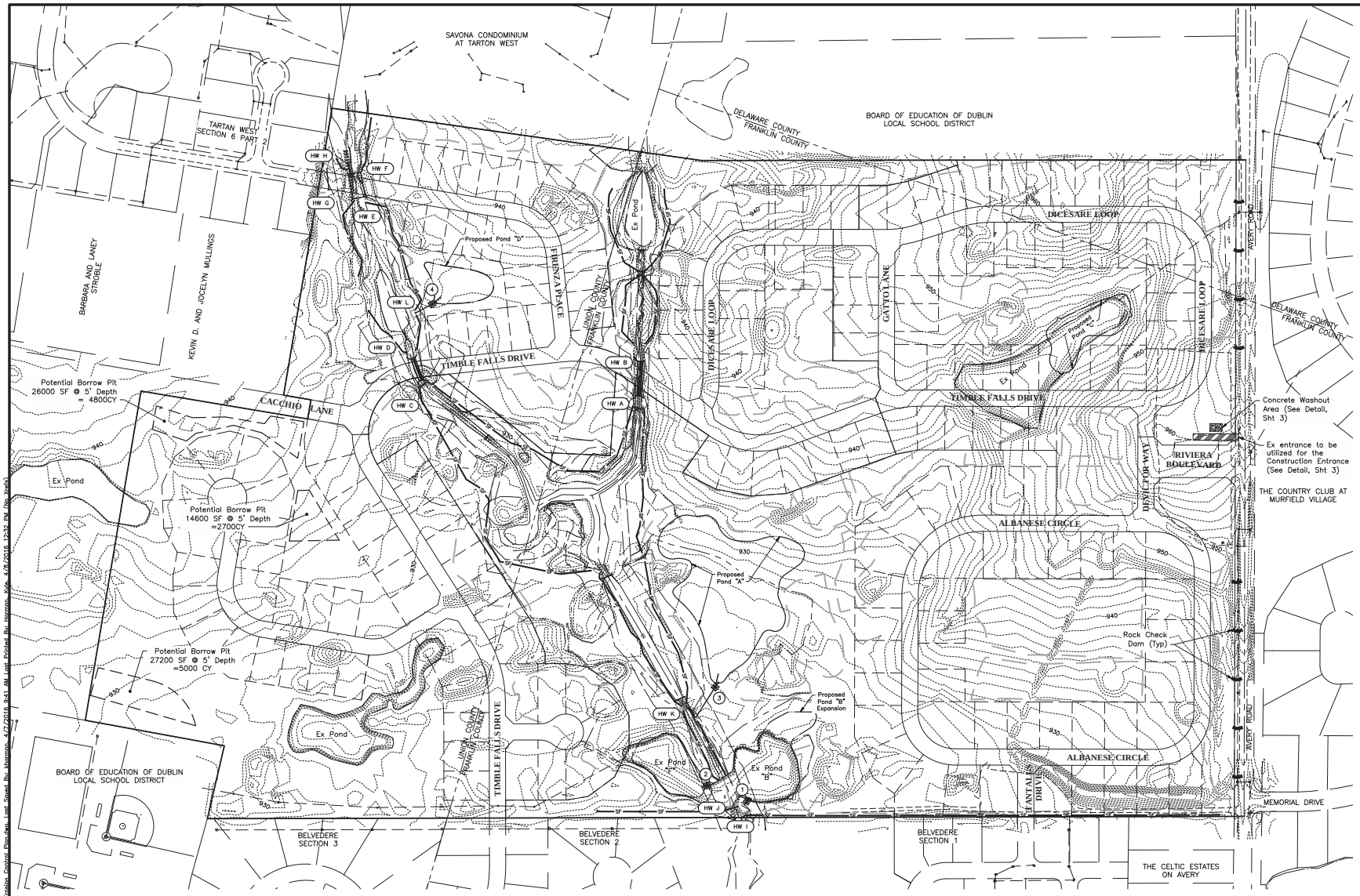

LEGEND

- Inlet Protection
- Rock Check Dam
- Grading Limits
- SF — Sediment Fence

See Erosion & Sedimentation Control Details, Sheet 3

REVISIONS

MARK	DATE	DESCRIPTION

CITY OF DUBLIN, FRANKLIN, UNION AND DELAWARE COUNTIES, OHIO
MASS EXCAVATION & STORM SEWER PLAN
FOR
RIVIERA
EROSION CONTROL PLAN

EMH&T
Evans, Mechwart, Hambleton & Tilton, Inc.
5500 New Albany Road, Columbus, OH 43054
Phone: 614.775.4500 Toll Free: 888.775.3648
Fax: 614.775.4800 Office: 888.775.3648
emht.com

DATE
April, 2016

SCALE
As Noted

JOB NO.
20150910

SHEET
4/21

J:\20150910\Dwg\CivSheets\Mass Exc\4 Erosion Control Plan\Erosion Cont. Sheet.Dwg, Mcinnes, 4/7/2016 9:41 AM, Last Edited By: Mcinnes, Kris, 4/6/2016 12:32 PM (No Xref)

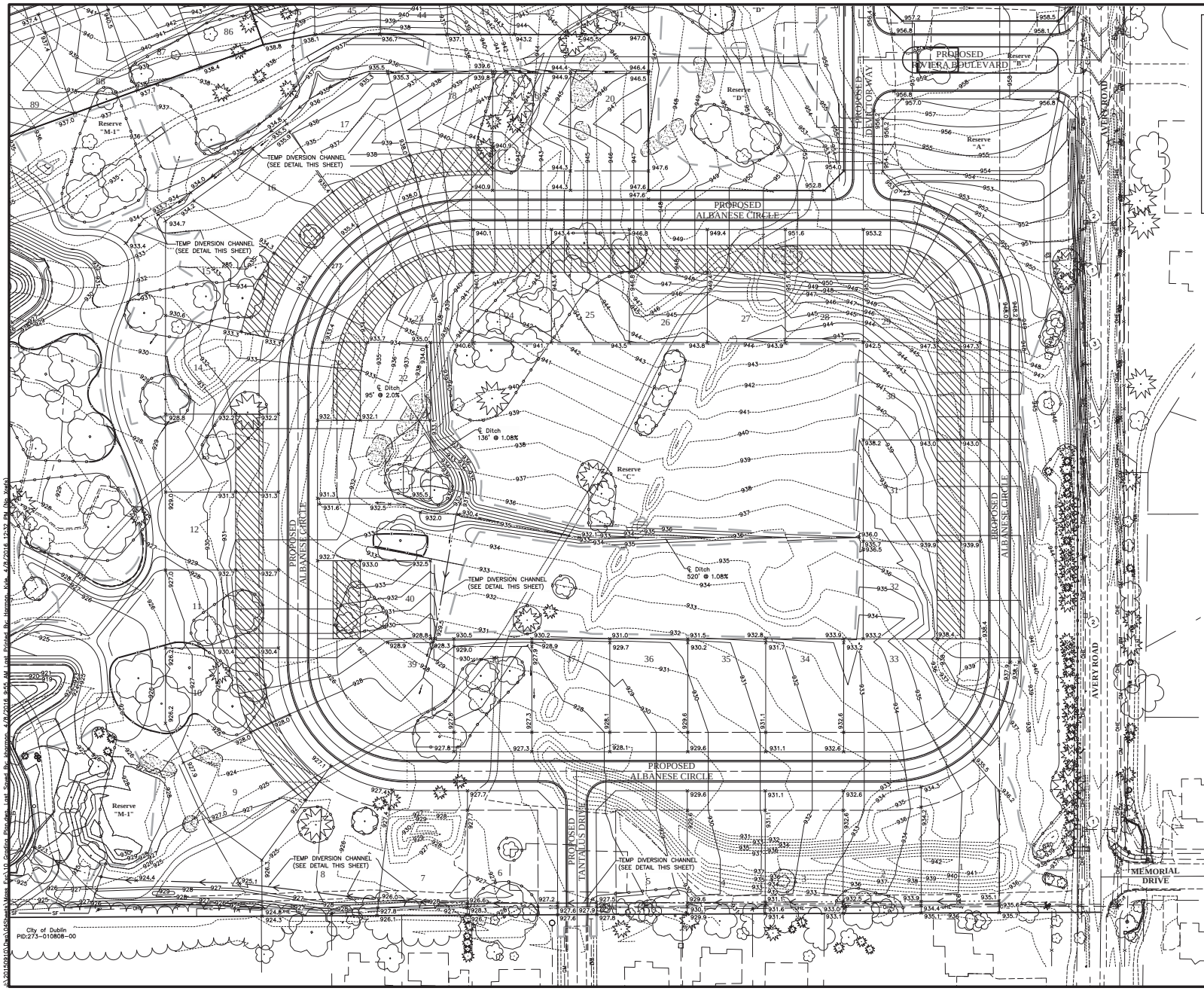

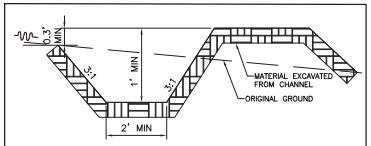

MAINTENANCE: ALL CHANNELS SHALL BE SEEDED AND STRAWED IMMEDIATELY FOLLOWING THEIR CONSTRUCTION. THE CONTRACTOR SHALL BE HELD RESPONSIBLE FOR MAINTENANCE OF THE CHANNEL PRIOR TO COMPLETION OF THE PROJECT. THE SLOPE OF THE CHANNEL SHALL BE SUCH TO PROVIDE ADEQUATE DRAINAGE THROUGHOUT THE ENTIRE LENGTH OF THE CHANNEL.

NOTE: MINIMUM SLOPE IS 0.5%

DIVERSION CHANNEL

NOT TO SCALE

GRAPHIC SCALE

0 30 60 120

1 inch = 60 feet

LEGEND

- Spillover Weir, See Detail Sheet 11
- Emergency Spillover Weir, See Detail Sheet 11
- Inlet Protection, See Detail Sheet 3
- Grading Limits
- ×936.00 – Suitable Fill Spot Elevation
- SF – Sediment Fence, See Detail Sheet 3
- Ex Tree Preservation Fence
- Ex Chain Link Fence
- Proposed Fill Area
- Ex Tree to be saved (Tree to be welled and drained, if needed, to preserve root system) At builder discretion tree can be removed if Dublin tree removal requirements/fees are met.
- Structural Fill, Stripping and Compaction Required
- Studied Proposed 100-Year Floodplain Elevation 923.99
- Cross Section Identifier 38
- Studied Floodway
- Studied Existing 100-year Floodplain
- Studied Proposed 100-year Floodplain
- Stream Corridor Protection Zone (SCPZ)

REVISIONS

MARK	DATE	DESCRIPTION

CITY OF DUBLIN, FRANKLIN, UNION AND DELAWARE COUNTIES, OHIO
MASS EXCAVATION & STORM SEWER PLAN
FOR
RIVIERA

GRADING PLAN

EMH&T
Evans, Mechwart, Hambleton & Tilton, Inc.
5500 New Albany Road, Columbus, OH 43054
Phone: 614.775.4500 Toll Free: 888.775.3648
Fax: 614.775.4800 Office: 888.775.3648
emht.com

DATE
April, 2016

SCALE
1" = 60'

JOB NO.
20150910

SHEET
5/21

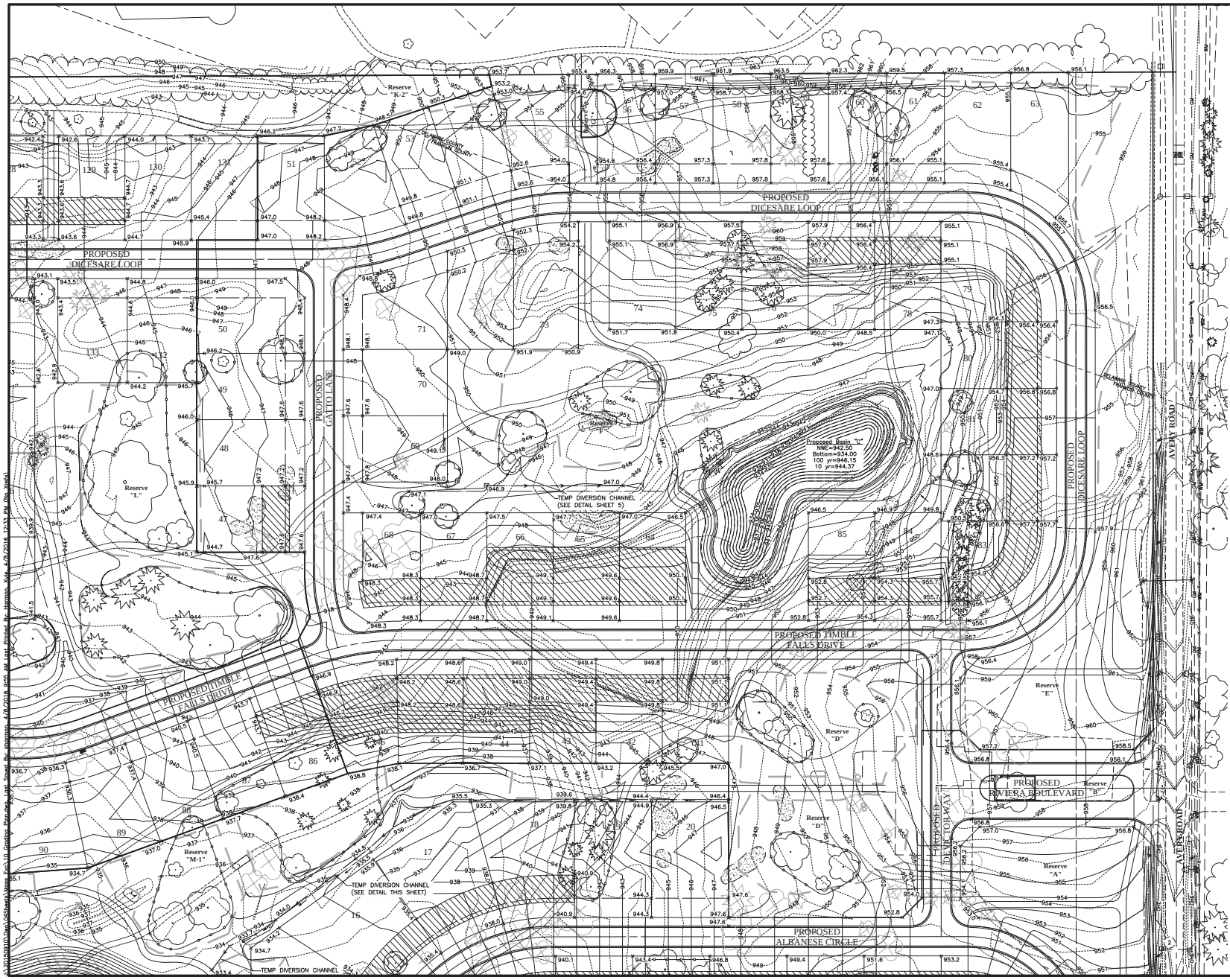

GRAPHIC SCALE

0 30 60 120

1 inch = 60 feet

LEGEND

- Spillover Weir, See Detail Sheet 11
- Emergency Spillover Weir, See Detail Sheet 11
- Inlet Protection, See Detail Sheet 3
- Grading Limits
- ×936.00 – Suitable Fill Spot Elevation
- SF – Sediment Fence, See Detail Sheet 3
- Ex Tree Preservation Fence
- Ex Chain Link Fence
- Proposed Fill Area
- Ex Tree to be saved (Tree to be welled and drained, if needed, to preserve root system) At builder discretion tree can be removed if Dublin tree removal requirements/fees are met.
- Structural Fill, Stripping and Compaction Required
- Studied Proposed 100-Year Floodplain Elevation 923.99
- Cross Section Identifier 38
- Studied Floodway
- Studied Existing 100-year Floodplain
- Studied Proposed 100-year Floodplain
- Stream Corridor Protection Zone (SCPZ)

REVISIONS

MARK	DATE	DESCRIPTION

CITY OF DUBLIN, FRANKLIN, UNION AND DELAWARE COUNTIES, OHIO
MASS EXCAVATION & STORM SEWER PLAN
FOR
RIVIERA
GRADING PLAN

EMH&T
Evans, Mechwart, Hambleton & Tilton, Inc.
5500 New Albany Road, Columbus, OH 43054
Phone: 614.775.4500 Toll Free: 888.775.3648
Office: 888.775.3648
emht.com

DATE
April, 2016

SCALE
1" = 60'

JOB NO.
20150910

SHEET
6/21

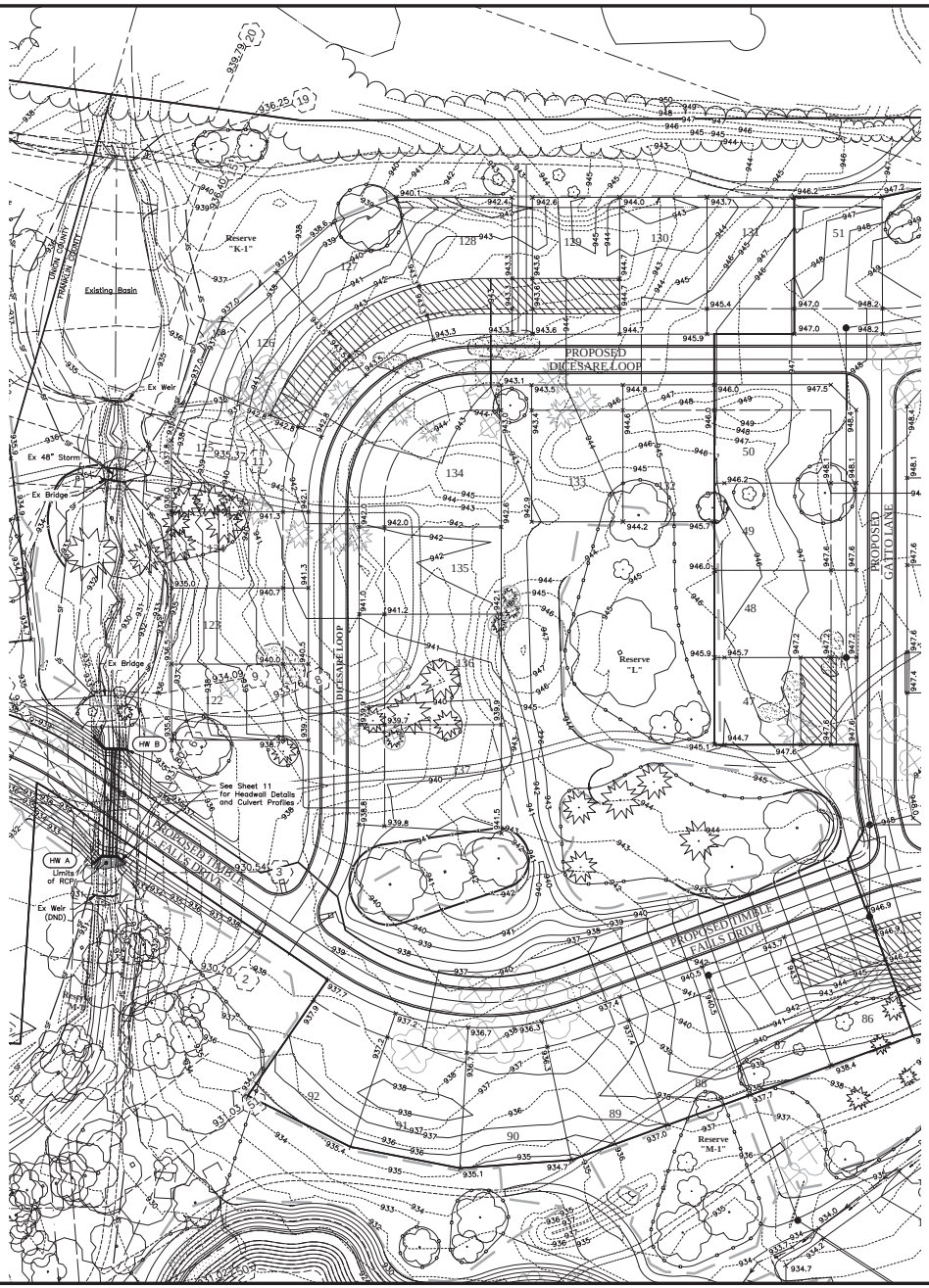

GRAPHIC SCALE

0 30 60 120

1 inch = 60 feet

LEGEND

- Spillover Weir, See Detail Sheet 11
- Emergency Spillover Weir, See Detail Sheet 11
- Inlet Protection, See Detail Sheet 3
- Grading Limits
- ×936.00 – Suitable Fill Spot Elevation
- SF – Sediment Fence, See Detail Sheet 3
- Ex Tree Preservation Fence
- Ex Chain Link Fence
- Proposed Fill Area
- Ex Tree to be saved (Tree to be welled and drained, if needed, to preserve root system) At builder discretion tree can be removed if Dublin tree removal requirements/fees are met.
- Structural Fill, Stripping and Compaction Required
- Studied Proposed 100-Year Floodplain Elevation – 923.99
- Cross Section Identifier – 38
- Studied Floodway
- Studied Existing 100-year Floodplain
- Studied Proposed 100-year Floodplain
- Stream Corridor Protection Zone (SCPZ)

REVISIONS

MARK	DATE	DESCRIPTION

CITY OF DUBLIN, FRANKLIN, UNION AND DELAWARE COUNTIES, OHIO

MASS EXCAVATION & STORM SEWER PLAN

FOR

RIVIERA

GRADING PLAN

EMH&T
Evans, Mechwart, Hambleton & Tilton, Inc.
5500 New Albany Road, Columbus, OH 43054
Phone 614.775.4500 Toll Free 888.775.3648
Fax 614.775.4800 emht.com

DATE: April, 2016

SCALE: 1" = 60'

JOB NO.: 20150910

SHEET: 7/21

J:\20150910\Dwg\CivSheets\Mass Exc\10 Grading Plan.dwg, Layout: Sheet 7/21, User: Hammon, Kim, 4/8/2016 9:54 AM, Last Printed By: Hammon, Kim, 4/8/2016 12:33 PM (No Xrefs)

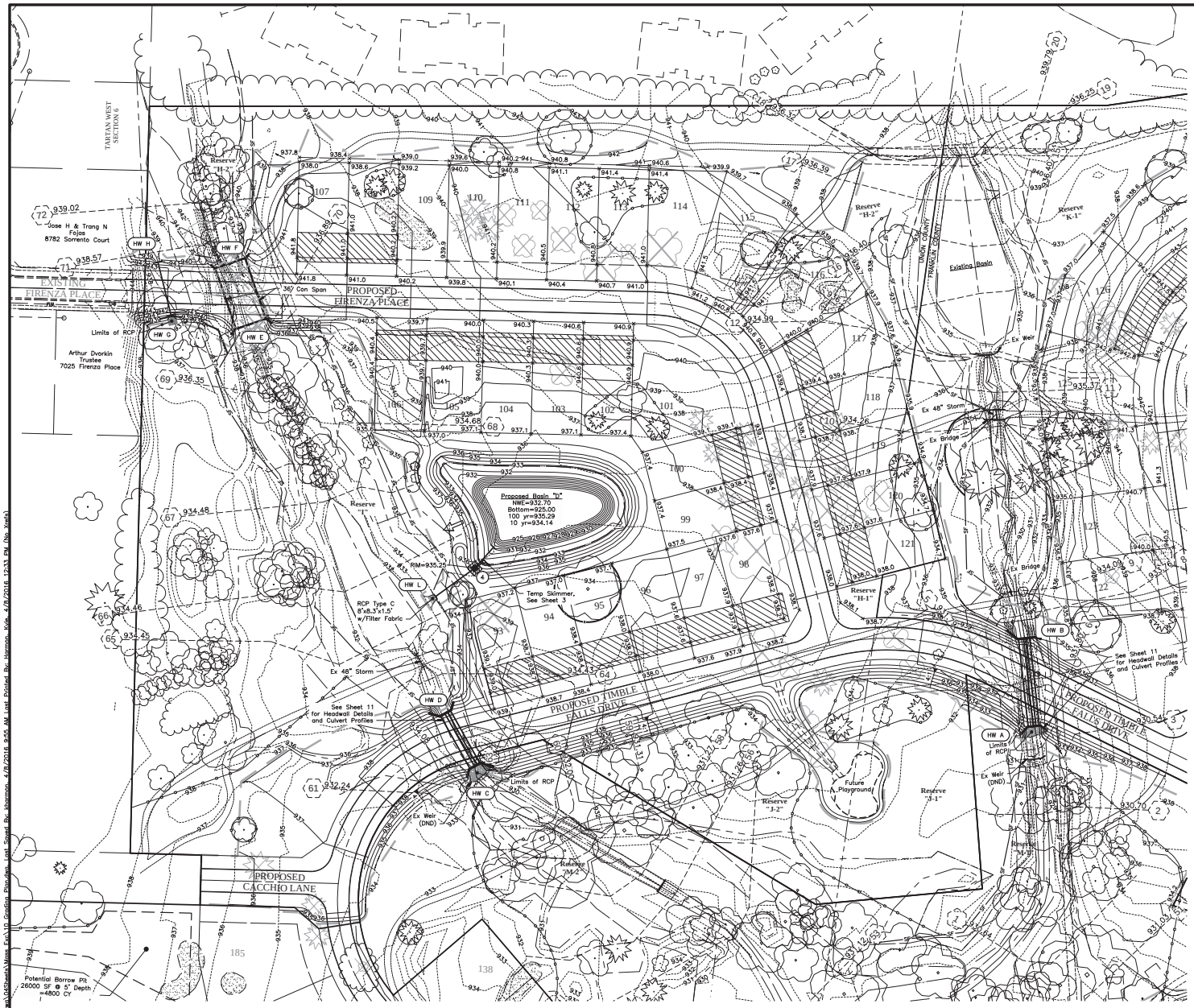

GRAPHIC SCALE

0 30 60 120

1 inch = 60 feet

LEGEND

- Spillover Weir, See Detail Sheet 11
- Emergency Spillover Weir, See Detail Sheet 11
- Inlet Protection, See Detail Sheet 3
- Grading Limits
- ×936.00 – Suitable Fill Spot Elevation
- SF – Sediment Fence, See Detail Sheet 3
- Ex Tree Preservation Fence
- Ex Chain Link Fence
- Proposed Fill Area
- Ex Tree to be saved (Tree to be welled and drained, if needed, to preserve root system) At builder discretion tree can be removed if Dublin tree removal requirements/fees are met.
- Structural Fill, Stripping and Compaction Required
- Studied Proposed 100-Year Floodplain Elevation 923.99
- Cross Section Identifier 38
- Studied Floodway
- Studied Existing 100-year Floodplain
- Studied Proposed 100-year Floodplain
- Stream Corridor Protection Zone (SCPZ)

REVISIONS

MARK	DATE	DESCRIPTION

CITY OF DUBLIN, FRANKLIN, UNION AND DELAWARE COUNTIES, OHIO
MASS EXCAVATION & STORM SEWER PLAN
FOR
RIVIERA
GRADING PLAN

EMH&T
Evans, Mechwart, Hambleton & Tilton, Inc.
5500 New Albany Road, Columbus, OH 43054
Phone: 614.775.4500 Toll Free: 888.775.3648
emht.com

DATE: April, 2016

SCALE: 1" = 60'

JOB NO.: 20150910

SHEET: 8/21

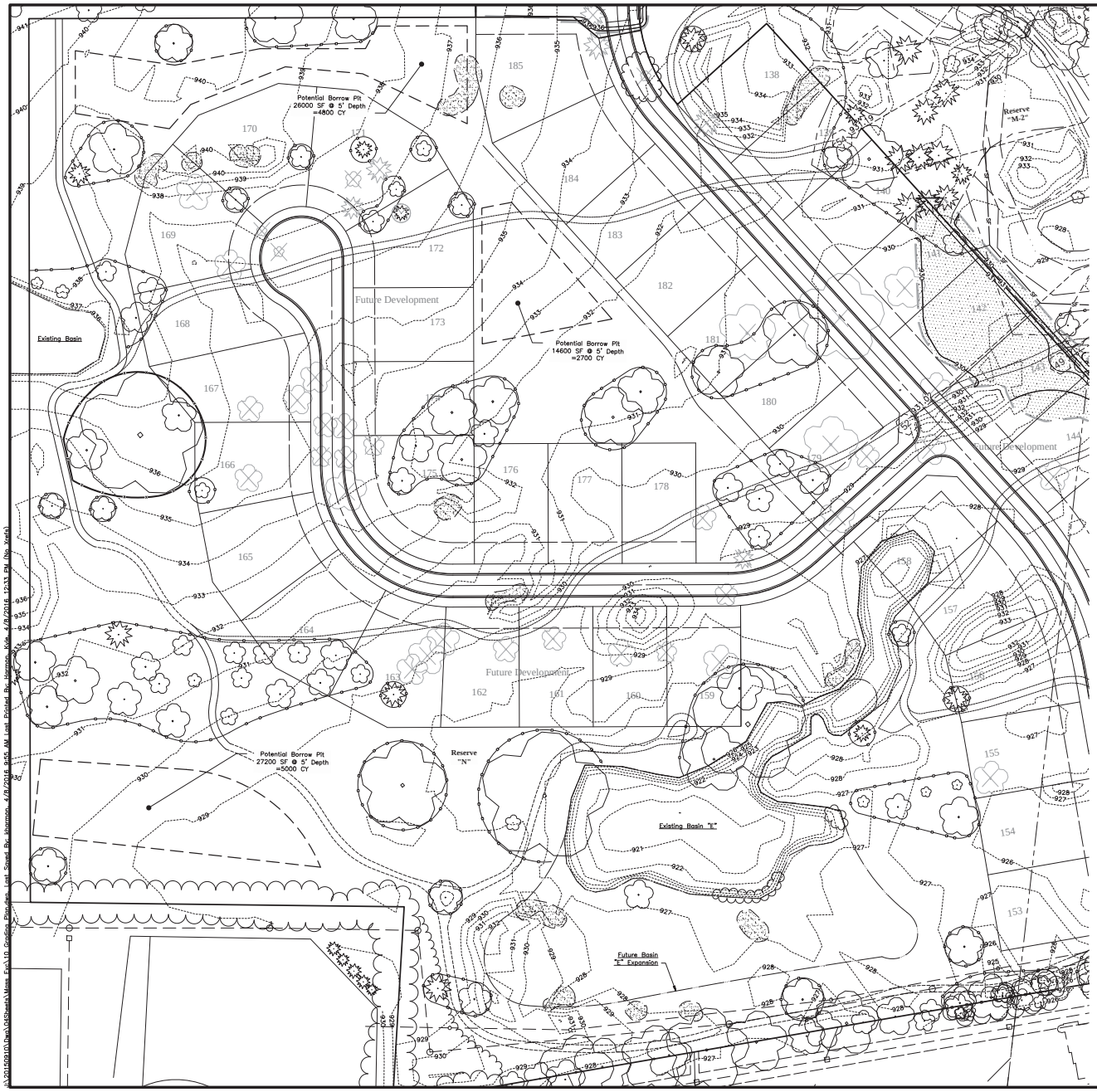

GRAPHIC SCALE

0 30 60 120

1 inch = 60 feet

LEGEND

- Spillover Weir, See Detail Sheet 11
- Emergency Spillover Weir, See Detail Sheet 11
- Inlet Protection, See Detail Sheet 3
- Grading Limits
- ×936.00 – Suitable Fill Spot Elevation
- SF – Sediment Fence, See Detail Sheet 3
- Ex Tree Preservation Fence
- Ex Chain Link Fence
- Proposed Fill Area
- Ex Tree to be saved (Tree to be welled and drained, if needed, to preserve root system) At builder discretion tree can be removed if Dublin tree removal requirements/fees are met.
- Structural Fill, Stripping and Compaction Required
- Studied Proposed 100-Year Floodplain Elevation 923.99
- Cross Section Identifier 38
- Studied Floodway
- Studied Existing 100-year Floodplain
- Studied Proposed 100-year Floodplain
- Stream Corridor Protection Zone (SCPZ)

REVISIONS

MARK	DATE	DESCRIPTION

CITY OF DUBLIN, FRANKLIN, UNION AND DELAWARE COUNTIES, OHIO
MASS EXCAVATION & STORM SEWER PLAN
FOR
RIVIERA
GRADING PLAN

EMH&T
Evans, Mechwart, Hambleton & Tilton, Inc.
5500 New Albany Road, Columbus, OH 43054
Phone: 614.775.4500 Toll Free: 888.775.3648
emht.com

DATE
April, 2016

SCALE
1" = 60'

JOB NO.
20150910

SHEET
9/21

GRAPHIC SCALE

0 30 60 120

1 inch = 60 feet

LEGEND

- Spillover Weir, See Detail Sheet 11
- Emergency Spillover Weir, See Detail Sheet 11
- Inlet Protection, See Detail Sheet 3
- Grading Limits
- ×936.00 — Suitable Fill Spot Elevation
- SF — Sediment Fence, See Detail Sheet 3
- Ex Tree Preservation Fence
- Ex Chain Link Fence
- Proposed Fill Area
- Ex Tree to be saved (Tree to be welled and drained, if needed, to preserve root system) At builder discretion tree can be removed if Dublin tree removal requirements/fees are met.
- Structural Fill, Stripping and Compaction Required
- Studied Proposed 100-Year Floodplain Elevation — 923.99
- Cross Section Identifier — 38
- Studied Floodway
- Studied Existing 100-year Floodplain
- Studied Proposed 100-year Floodplain
- Stream Corridor Protection Zone (SCPZ)

REVISIONS

MARK	DATE	DESCRIPTION

CITY OF DUBLIN, FRANKLIN, UNION AND DELAWARE COUNTIES, OHIO
MASS EXCAVATION & STORM SEWER PLAN
FOR
RIVIERA
GRADING PLAN

EMH&T
Evans, Mechwart, Hambleton & Tilton, Inc.
5500 New Albany Road, Columbus, OH 43054
Phone: 614.775.4500 Toll Free: 888.775.3648
Fax: 614.775.4800 emht.com

DATE
April, 2016

SCALE
1" = 60'

JOB NO.
20150910

SHEET
10/21

J:\20150910\Dwg\CivSheets\Mass Exc\10 Grading Plan.dwg, Layout: Sheet 10, Modified By: Hammon, Kyle, 4/8/2016 9:45 AM, Last Printed By: Hammon, Kyle, 4/8/2016 10:33 AM (No Xrefs)

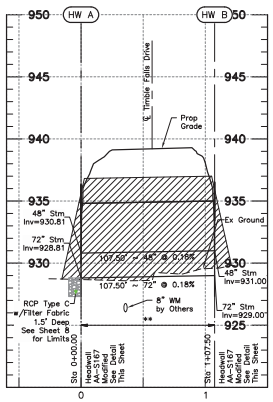

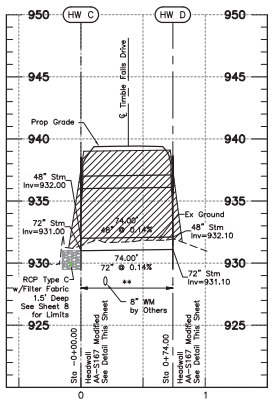

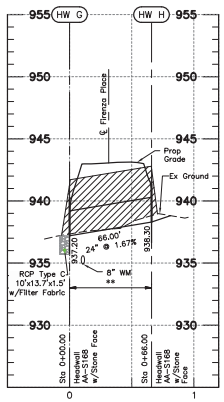

BASIN B OUTLET

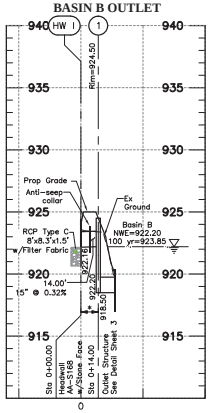

EX BASIN F OUTLET

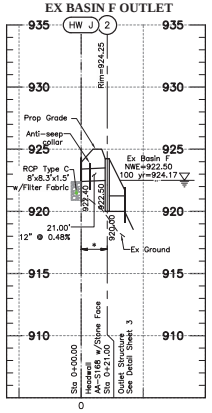

BASIN A OUTLET

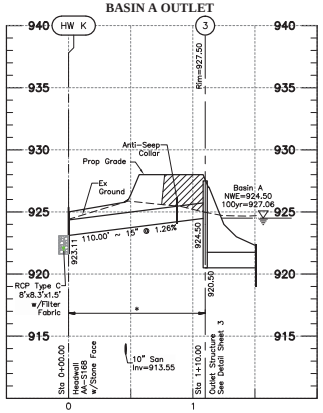

BASIN D OUTLET

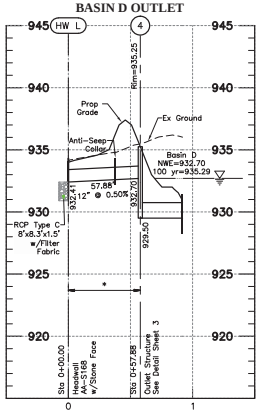

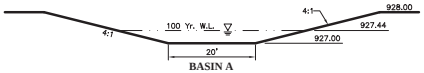

BASIN A SPILLOVER WEIR
NOT TO SCALE

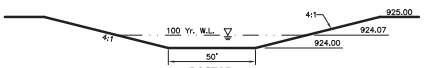

BASIN B SPILLOVER WEIR
NOT TO SCALE

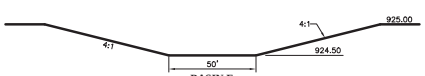

BASIN F EMERGENCY SPILLOVER WEIR
NOT TO SCALE

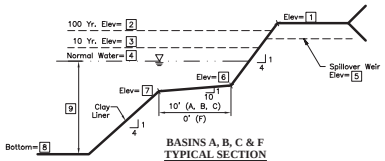

BASINS A, B, C & F TYPICAL SECTION
NOT TO SCALE

BASIN DATA									
BASIN	1	2	3	4	5	6	7	8	9
A	928.00	927.06	926.46	924.50	927.00	924.00	923.00	916.00	8.5'
B	925.00	923.85	923.11	922.20	924.00	922.00	921.00	917.00	5.2'
C	946.00	946.15	944.37	942.50	945.00	942.00	941.00	934.00	8.5'
EX F	925.00	924.17	923.46	922.50	924.50	922.00	–	918.00	4.5'

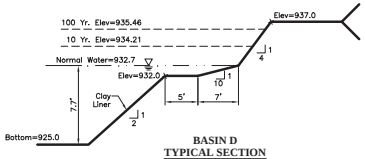

BASIN D TYPICAL SECTION
NOT TO SCALE

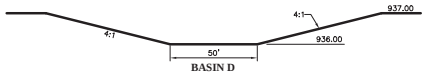

BASIN D EMERGENCY SPILLOVER WEIR
NOT TO SCALE

HORIZ 1 inch = 50 feet: 0, 25, 50, 100
VERT 1 inch = 5 feet: 0, 2.5, 5, 10

Notes:
Maintain a minimum of 1.5' vertical and 10' horizontal clearance from proposed water mains.

All fills are to be placed a minimum of 2.5' above the proposed storm sewer prior to the start of sewer construction per COLS 901.04.
Denoted thus:

All backfill shall be compacted to the density of the surrounding ground unless otherwise noted:

* –Compacted Backfill Item 911

** –Compacted Granular Backfill, Item 912

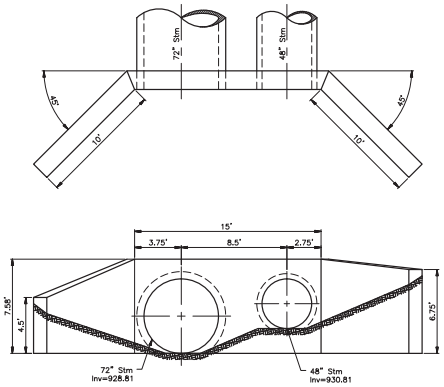

HEADWALL A
AA-S167 MODIFIED
Scale: 1"=5'

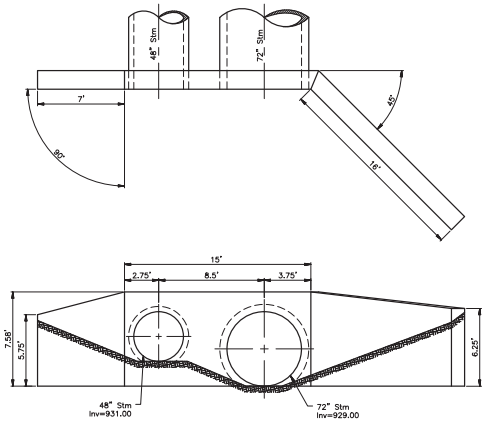

HEADWALL B
AA-S167 MODIFIED
Scale: 1"=5'

GRAPHIC SCALE
0, 2.5, 5, 10
1 inch = 5 feet

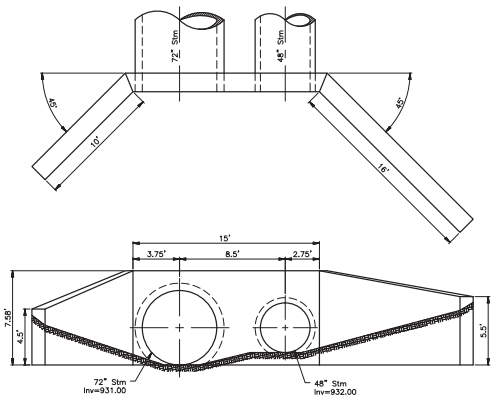

HEADWALL C
AA-S167 MODIFIED
Scale: 1"=5'

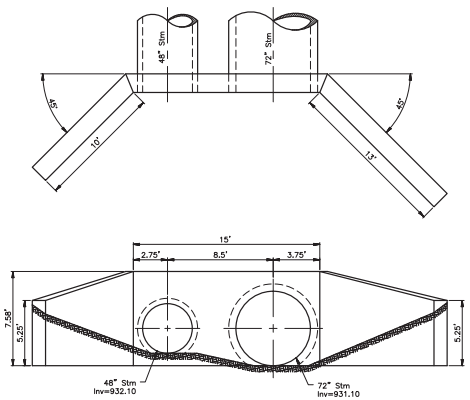

HEADWALL D
AA-S167 MODIFIED
Scale: 1"=5'

REVISIONS

MARK	DATE	DESCRIPTION

CITY OF DUBLIN, FRANKLIN, UNION AND DELAWARE COUNTIES, OHIO
MASS EXCAVATION & STORM SEWER PLAN
FOR
RIVIERA

STORM PROFILES AND DETAILS

EMH&T
Evans, Mechwart, Hambleton & Tilton, Inc.
5500 New Albany Road, Columbus, OH 43054
Phone: 614.775.4500 Toll Free: 888.775.3648
emht.com

DATE: April, 2016
SCALE: As Noted
JOB NO.: 20150910
SHEET: 11/21

J:\20150910\Dwg\CivSheets\Mass Exc\11 Storm Profiles and Details.dwg Last Saved By: Hammon, Kyle 4/8/2016 12:29 PM Last Printed By: Hammon, Kyle 4/8/2016 12:34 PM (No Xrefs)

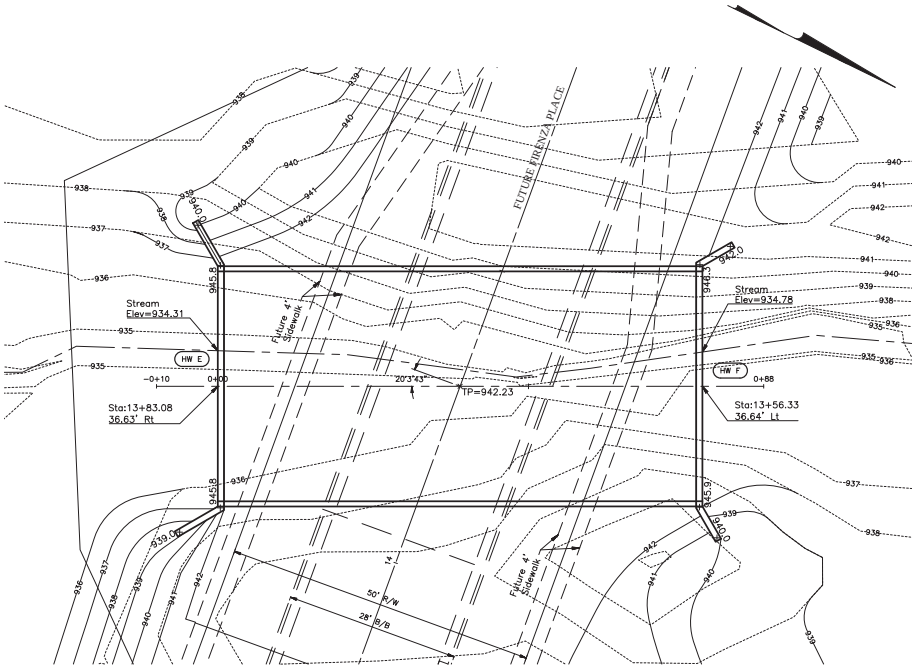

PLAN VIEW
Scale: 1"=10'

HORIZ 1 inch = 10 feet
VERT 1 inch = 5 feet

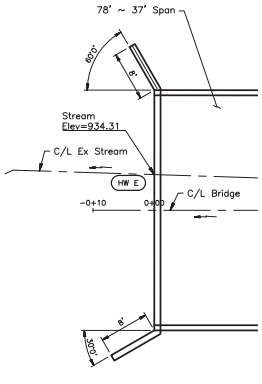

SOUTH (DOWNSTREAM) WINGWALL DETAIL
Scale: 1"=10'

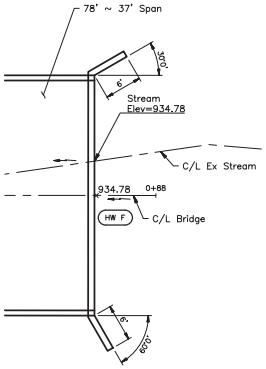

NORTH (UPSTREAM) WINGWALL DETAIL
Scale: 1"=10'

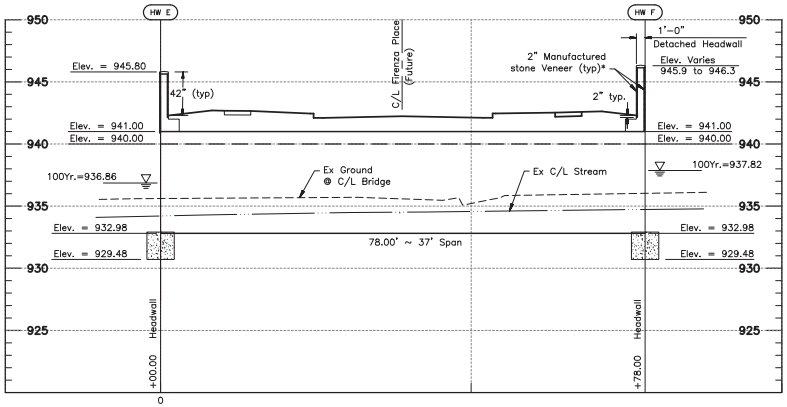

PROFILE
Scale: Horiz: 1"=10'
Vert: 1"=5'

Notes:
Maintain a minimum of 1.5' vertical and 10' horizontal clearance from proposed water mains.

* Note:
MANUFACTURED STONE VENEER, AS PER PLAN
Manufactured Stone Veneer, Type to be "North Shore" (Blue Vein) or approved equal size and pattern similar to Brandonway Bike Tunnel at Brandonway Drive and Dublin Road. The Contractor is encouraged to view the stone veneer prior to bidding. Mortar color shall approximate Stone Color. Mortar to be type "S". Prior to ordering Stone Veneer the Contractor shall submit a sample board style. Pattern shall be Random Ashlar. All materials, labor and incidental costs necessary to install veneer complete in place shall be included with the unit price bid for Item Special – Manufactured Stone Veneer, as per plan.

REVISIONS

MARK	DATE	DESCRIPTION

CITY OF DUBLIN, FRANKLIN, UNION AND DELAWARE COUNTIES, OHIO
MASS EXCAVATION & STORM SEWER PLAN
FOR
RIVIERA

BRIDGE PLAN VIEW AND DETAILS

EMH&T
Evans, Mechwart, Hambleton & Tilton, Inc.
5500 New Albany Road, Columbus, OH 43054
Phone: 614.775.4500 Toll Free: 888.775.3648
Fax: 614.775.4800 emht.com

DATE
April, 2016

SCALE
Horiz: 1" = 50'
Vert: 1" = 5'

JOB NO.
20150910

SHEET
12/21

J:\20150910\Dwg\CivSheets\Mass Ex-Sh\P-Bridge Plan View and Details.dwg, Last Saved By: kbennett, 4/27/2016, 12:37 PM Last Printed By: kbennett, Kirby, 4/26/2016, 12:35 PM (Obj: Kirby)

MASS EXCAVATION PLAN FOR RIVIERA SUBDIVISION

DUBLIN, OHIO

NOTES

GENERAL NOTES:

1. THIS BRIDGE HAS BEEN DESIGNED FOR GENERAL SITE CONDITIONS. THE PROJECT ENGINEER SHALL BE RESPONSIBLE FOR THE STRUCTURE'S SUITABILITY TO THE EXISTING SITE CONDITIONS AND FOR THE HYDRAULIC EVALUATION -- INCLUDING SCOUR AND CONFIRMATION OF SOIL CONDITIONS.
2. PRIOR TO CONSTRUCTION, CONTRACTOR MUST VERIFY ALL ELEVATIONS SHOWN THROUGH THE ENGINEER.
3. ONLY CONTECH ENGINEERED SOLUTIONS LLC, THE CON/SPAN® APPROVED PRECASTER IN OHIO MAY PROVIDE THE STRUCTURE DESIGNED IN ACCORDANCE WITH THESE PLANS.
4. THE USE OF ANOTHER PRECAST STRUCTURE WITH THE DESIGN ASSUMPTIONS USED FOR THE CON/SPAN® STRUCTURE MAY LEAD TO SERIOUS DESIGN ERRORS. USE OF ANY OTHER PRECAST STRUCTURE WITH THIS DESIGN AND DRAWINGS VOIDS ANY CERTIFICATION OF THIS DESIGN AND WARRANTY. CONTECH ENGINEERED SOLUTIONS, LLC ASSUMES NO LIABILITY FOR DESIGN OF ANY ALTERNATE OR SIMILAR TYPE STRUCTURES.
5. ALTERNATE STRUCTURES MAY BE CONSIDERED, PROVIDED THAT DRAWINGS AND CALCULATIONS SIGNED AND SEALED BY A PROFESSIONAL ENGINEER, REGISTERED IN THE STATE OF OHIO, EMPLOYED BY THE PRECAST CONCRETE BRIDGE SUPPLIER, ARE SUBMITTED TO THE ENGINEER 2 WEEKS PRIOR TO THE BID DATE FOR REVIEW AND APPROVAL.
6. ALTERNATE STRUCTURES MAY BE CONSIDERED, PROVIDED THAT THE ALTERNATE DESIGN DOES NOT REDUCE THE HYDRAULIC OPENING OF THE STRUCTURE AS SHOWN ON THE DRAWINGS. AT A MINIMUM THE ALTERNATE STRUCTURE MUST PROVIDE THE SAME OR LARGER SPAN AND RISE AS THE STRUCTURE SHOWN ON THE DRAWINGS.
7. THE PRECAST ARCH SUPPLIER MUST ATTEND THE PRE-BID MEETING, IF ONE IS HELD.
8. SUPPLIER OF PROPOSED ALTERNATES TO A CON/SPAN® BRIDGE SYSTEM MUST SUBMIT AT LEAST TWO (2) INDEPENDENTLY VERIFIED FULL SCALE LOAD TESTS THAT CONFIRM THE PROPOSED DESIGN METHODOLOGY OF THE THREE SIDED/ARCH STRUCTURE(S). THE PROPOSED ALTERNATE, UPON SATISFACTORY CONFIRMATION OF DESIGN METHODOLOGY, MAY BE CONSIDERED AN ACCEPTABLE ALTERNATE.
9. PROPOSED ALTERNATE STRUCTURES MAY BE CONSIDERED, PROVIDED THAT THE PRECAST CONCRETE BRIDGE STRUCTURES ARE PROVIDED BY A SUPPLIER THAT HAS A MINIMUM OF TWO (2) REGISTERED PROFESSIONAL ENGINEERS ON STAFF THAT ARE DEDICATED TO THE DESIGN OF THESE TYPES OF STRUCTURES. SUPPLIER MUST PROVIDE THESE NAMES, P.E. LICENSE NUMBERS AND DATES OF HIRE AT TIME OF ALTERNATE SUBMITTAL.

DESIGN DATA

DESIGN LOADING:
- BRIDGE UNITS: HL-93
- HEADWALLS: EARTH PRESSURE + TL-4 LIVE LOAD IMPACT
- WINGWALLS: EARTH PRESSURE + LIVE LOAD SURCHARGE (WW1 + WW4)
- EARTH PRESSURE ONLY (WW2 + WW3)

DESIGN FILL HEIGHT: 1'-0" MIN. 2'-0" MAX.
FROM TOP OF CROWN TO TOP OF PAVEMENT.
DESIGN METHOD (ARCHES, HEADWALLS & WINGWALLS): LOAD RESISTANCE FACTOR DESIGN PER AASHTO LRFD SPECIFICATION
DESIGN METHOD (FOUNDATION): PER STANDARD AASHTO SPECIFICATION, 17th EDITION
NET ALLOWABLE SOIL BEARING PRESSURE: 4000 PSF*
GROSS ALLOWABLE SOIL BEARING PRESSURE: 4000 PSF*

*FOUNDATION EXCAVATION AND SUBGRADE PREPARATION SHALL BE IN ACCORDANCE WITH THE GEOTECHNICAL REPORT FOR THIS PROJECT PREPARED BY GEOTECHNICAL CONSULTANTS INC. DATED 10/30/2015

MATERIALS

PRECAST UNITS SHALL BE CONSTRUCTED AND INSTALLED IN ACCORDANCE WITH CON/SPAN® SPECIFICATIONS. CONCRETE FOR FOOTINGS SHALL HAVE A MINIMUM COMPRESSIVE STRENGTH OF 4000 PSI. REINFORCING STEEL FOR FOOTINGS SHALL CONFORM TO ASTM A615 OR A996-GRADE 60.

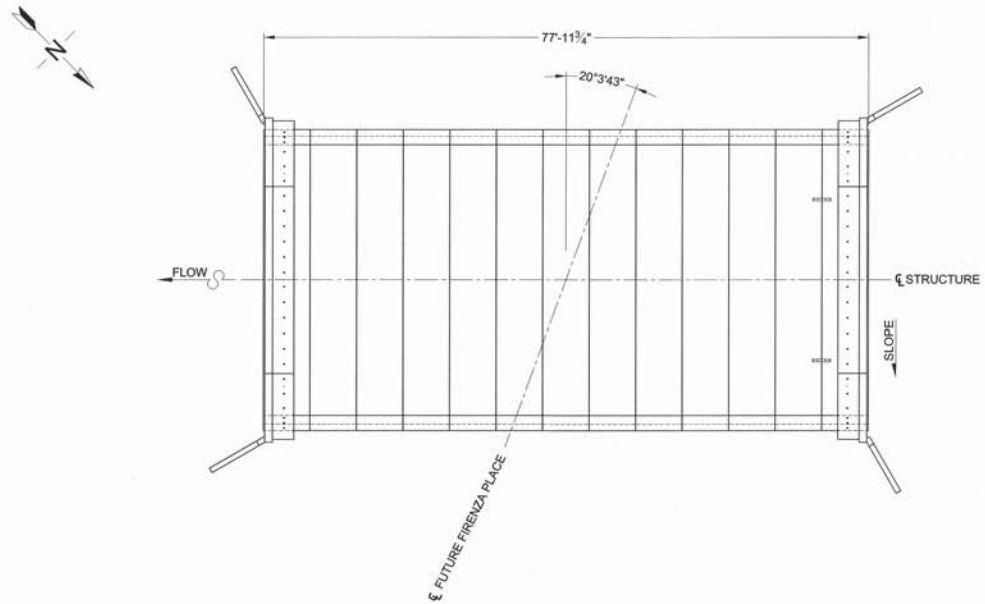

LOCATION PLAN

NOT TO SCALE

BRIDGE
INSTALLATION DRAWINGS SHEET INDEX

13	LOCATION PLAN & GENERAL NOTES
14	BRIDGE PLAN & DETAILS
15	FOUNDATION PLAN
16	SECTIONS & DETAILS
17	ELEVATIONS
18	SECTIONS & DETAILS
19	DETAILS
20	SPECIFICATIONS
21	SPECIFICATIONS

CONTECH PROJECT No.:	532278-010
DESIGNED: KDK	DRAWN: ACR
CHECKED: JMF	APPROVED: PAC

STATE OF OHIO PHILIP ALAN CREAMER E-64516 REGISTERED PROFESSIONAL ENGINEER 9/9/16

CONTECH ENGINEERED SOLUTIONS LLC
www.ContechES.com

CON/SPAN. -SERIES.

REVISIONS

MARK	DATE	DESCRIPTION

CITY OF DUBLIN, FRANKLIN, UNION AND DELAWARE COUNTIES, OHIO
MASS EXCAVATION PLAN
FOR
RIVIERA
LOCATION PLAN AND GENERAL NOTES

EMH&T
Evans, Mechwart, Hambleton & Tilton, Inc.
Engineers • Surveyors • Planners • Scientists
5500 New Albany Road, Columbus, OH 43054
Phone: 614.775.4500 Toll Free: 866.775.5368
emht.com

DATE: December, 2015
SCALE: As Noted
JOB NO.: 20150910
SHEET: 13/21

I:\Work\Project\Active\532200\532278-532278-10-CON_SPAN_C_Series\Drawings\Contract\PRE-532278-010-CD-CON-B.dwg, Last Saved By: tbeck, 12/18/2015 5:17 PM Last Printed By: KDK, Sunday, 1/24/2016 4:02 PM, Plot Scale

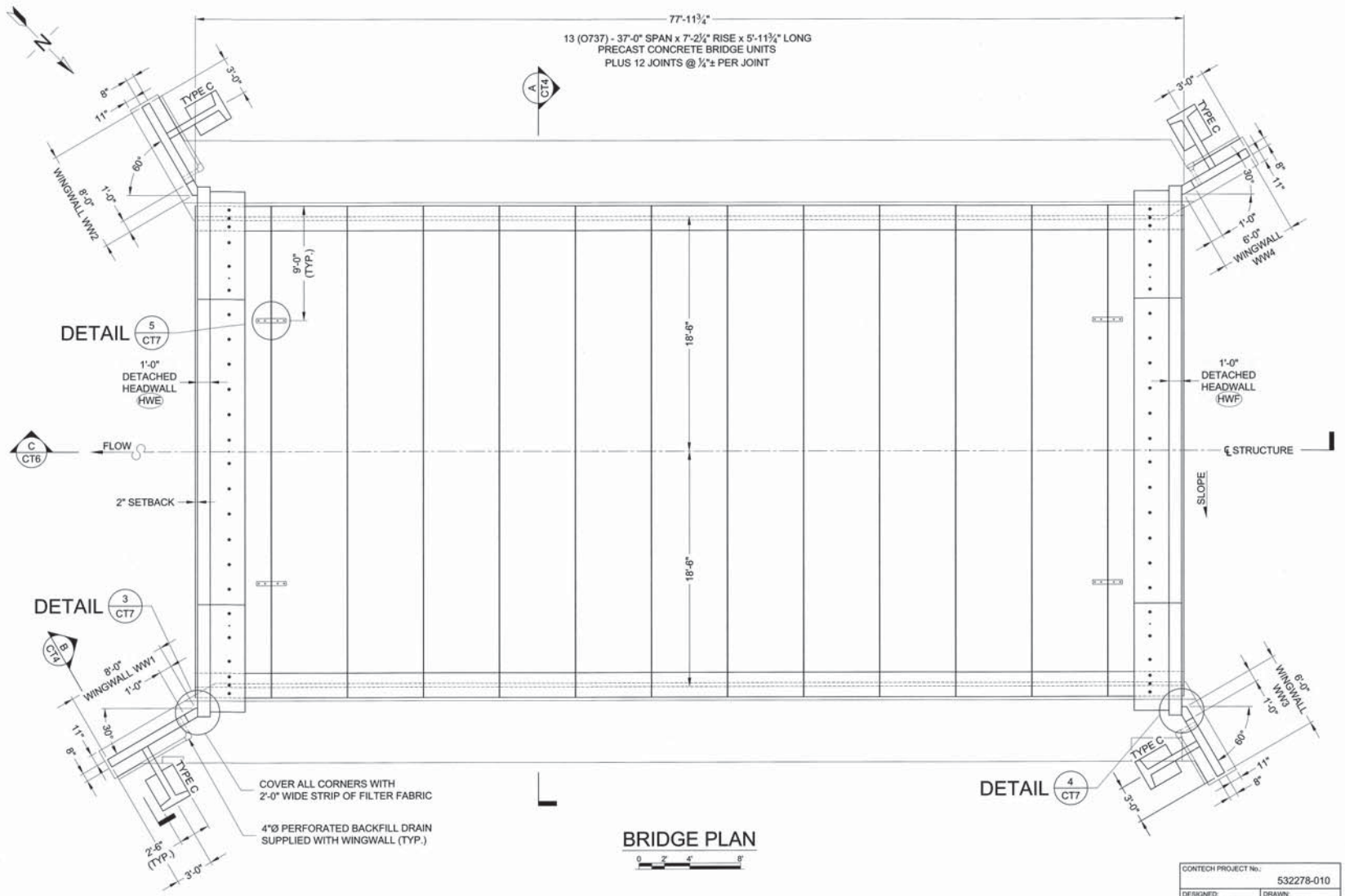

BRIDGE PLAN

0 2' 4' 8'

CONTECH PROJECT No.: 532278-010	
DESIGNED: KDK	DRAWN: ACR
CHECKED: JMF	APPROVED: PAC

CONTECH ENGINEERED SOLUTIONS LLC
www.ContechES.com

CONSPAN SERIES

STATE OF OHIO PHILIP ALAN CREAMER E-64516 REGISTERED PROFESSIONAL ENGINEER

REVISIONS

MARK	DATE	DESCRIPTION

CITY OF DUBLIN, FRANKLIN, UNION AND DELAWARE COUNTIES, OHIO
MASS EXCAVATION PLAN
FOR
RIVIERA

BRIDGE PLAN & DETAILS

EMH&T
Evans, Mechwart, Hambleton & Tilton, Inc.
Engineers • Surveyors • Planners • Scientists
5500 New Albany Road, Columbus, OH 43054
Phone: 614.775.4500 • Fax: 614.775.4800
emht.com

DATE: December, 2015

SCALE: As Noted

JOB NO.: 20150910

SHEET: 14/21

I:\Admin\Project\Active\532200\532278\532278-10-CON_SPAN_S_Series\Drawings\Contract\PRE-532278-010-CO-CON-B.dwg, Last Saved By: tiewis, 12/18/2015 3:17 PM Last Printed By: tiewis, 12/18/2015 4:08 PM, Plot Scale: 1:1

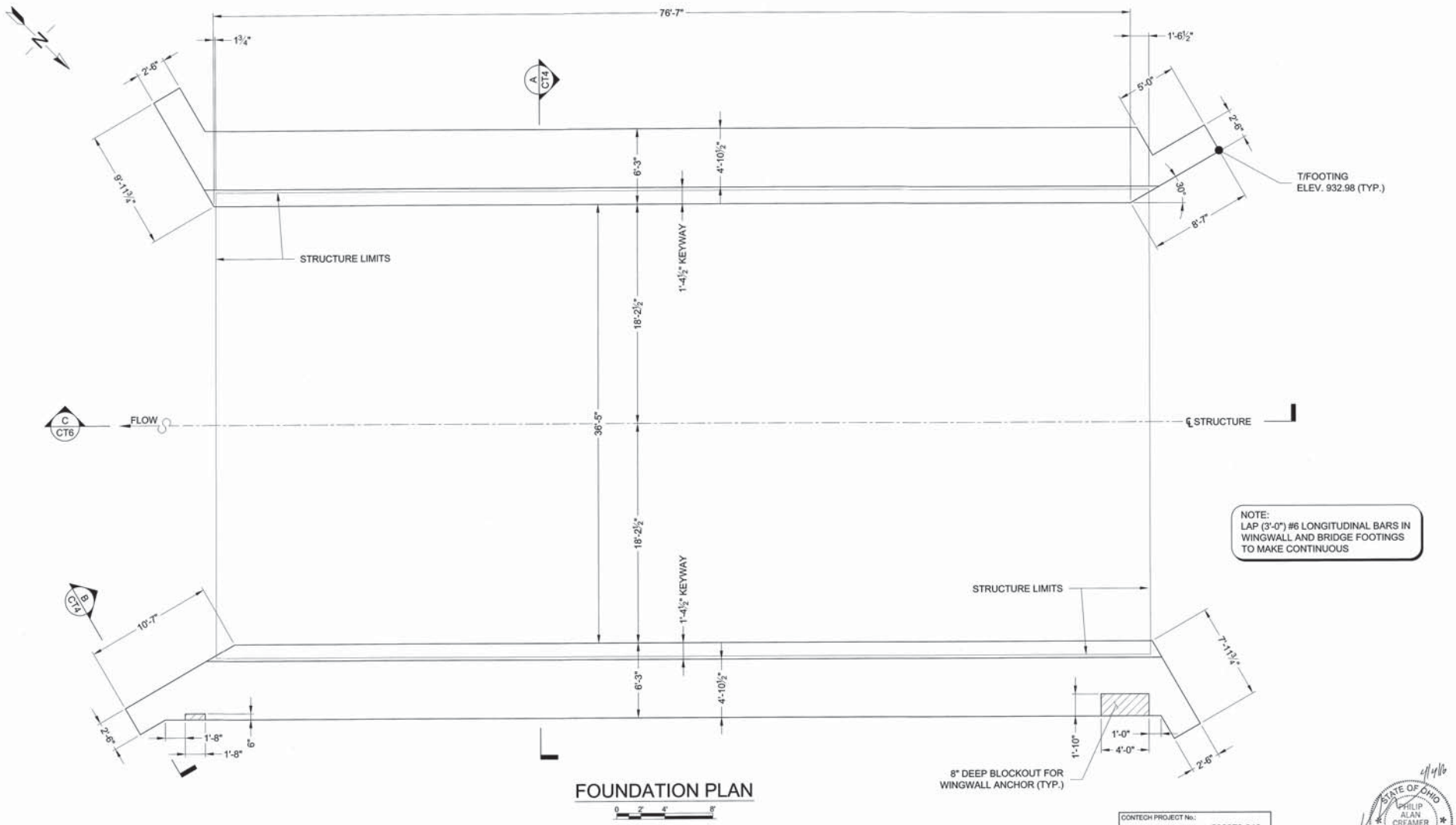

NOTE:
LAP (3'-0") #6 LONGITUDINAL BARS IN WINGWALL AND BRIDGE FOOTINGS TO MAKE CONTINUOUS

FOUNDATION PLAN

0 2' 4' 8'

CONTECH PROJECT No.:	532278-010
DESIGNED: KDK	DRAWN: ACR
CHECKED: JMF	APPROVED: PAC

CONTECH ENGINEERED SOLUTIONS LLC
www.ContechES.com

CON SPAN E-SERIES

STATE OF OHIO
PHILIP ALAN CREAMER
E-64516
REGISTERED
PROFESSIONAL ENGINEER
4/4/16

MARK	DATE	DESCRIPTION

REVISIONS

CITY OF DUBLIN, FRANKLIN, UNION AND DELAWARE COUNTIES, OHIO
MASS EXCAVATION PLAN
FOR
RIVIERA
FOUNDATION PLAN

EMHT
Evans, Mechwart, Hambleton & Tilton, Inc.
5500 New Albany Road, Columbus, OH 43054
Phone: 614.775.4500 Fax: 614.775.4800
emht.com

DATE: December, 2015

SCALE: As Noted

JOB NO.: 20150910

SHEET: 15/21

I:\Metro\Project\Active\532000\532278\532278-10-CON_SPAN_CL_Series\Drawings\Contract\PRE-532278-010-CD1-CON-B.dwg, Last Saved By: tlewis, 12/16/2015 3:17 PM Last Printed By:
PAGE: Tabloid, 11 x 17(279.4 x 431.8), 1:20.3(0.049)

*NOTE:
MANUFACTURED STONE VENEER, AS PER PLAN (BY OTHERS)

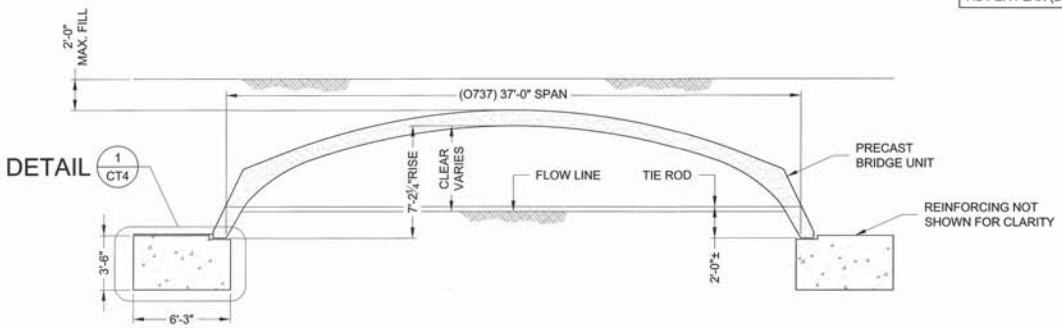

SECTION A CT2
0 2' 4' 8'

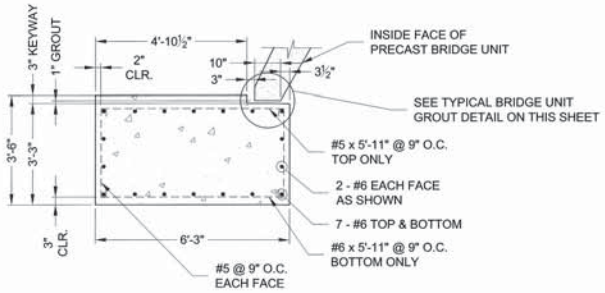

DETAIL 1 CT4
0 2' 4' 8'

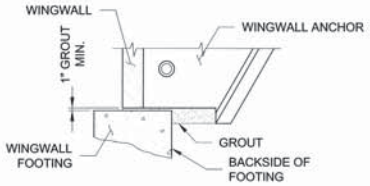

NOTES:
- MINIMUM 1" GROUT UNDER WINGWALL LEG & ANCHOR STEM.
- AREA BETWEEN WINGWALL FOOTING AND WINGWALL ANCHOR SHALL BE GROUTED SOLID BEFORE BACKFILL.
- FORM BACKSIDE OF FOOTING TO DIMENSIONS SHOWN ON FOUNDATION PLAN.

TYPICAL WINGWALL GROUT DETAIL

NOT TO SCALE

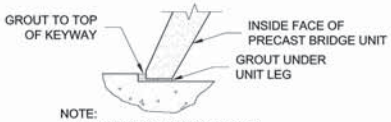

NOTE:
FILL ENTIRE KEYWAY INCLUDING NOMINAL 1" VOID BETWEEN BOTTOM OF KEYWAY AND BOTTOM OF PRECAST BRIDGE UNIT LEG WITH GROUT.

TYPICAL BRIDGE UNIT GROUT DETAIL

NOT TO SCALE

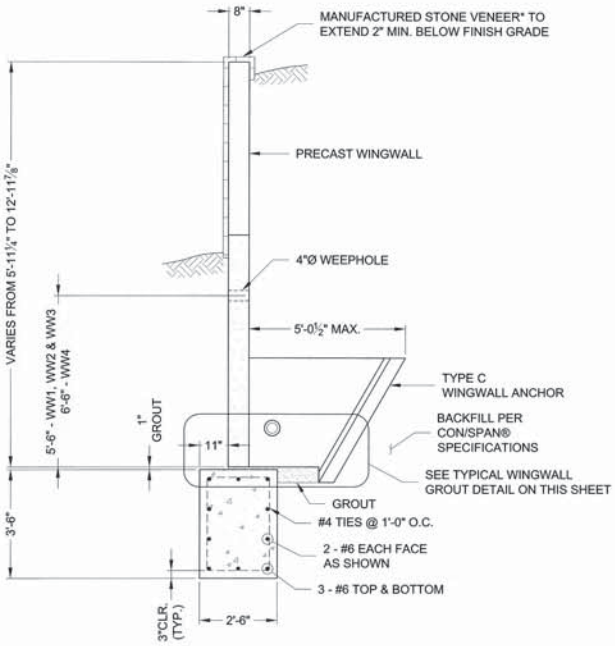

SECTION B CT2
0 1' 2' 4'

CONTECH PROJECT No.:	532278-010
DESIGNED: KDK	DRAWN: ACR
CHECKED: JMF	APPROVED: PAC

CONTECH ENGINEERED SOLUTIONS LLC
www.ContechES.com

CON/SPAN. O-SERIES.

STATE OF OHIO PHILIP ALAN CREAMER E-64516 REGISTERED PROFESSIONAL ENGINEER

REVISIONS

MARK	DATE	DESCRIPTION

CITY OF DUBLIN, FRANKLIN, UNION AND DELAWARE COUNTIES, OHIO
MASS EXCAVATION PLAN
RIVIERA
SECTIONS & DETAILS

EMH&T
Evans, Mechwart, Hambleton & Tilton, Inc.
Engineers • Surveyors • Planners • Scientists
5500 New Albany Road, Columbus, OH 43054
Phone: 614.775.4500 Toll Free: 866.775.5450
emht.com

DATE: December, 2015
SCALE: As Noted
JOB NO.: 20150910
SHEET: 16/21

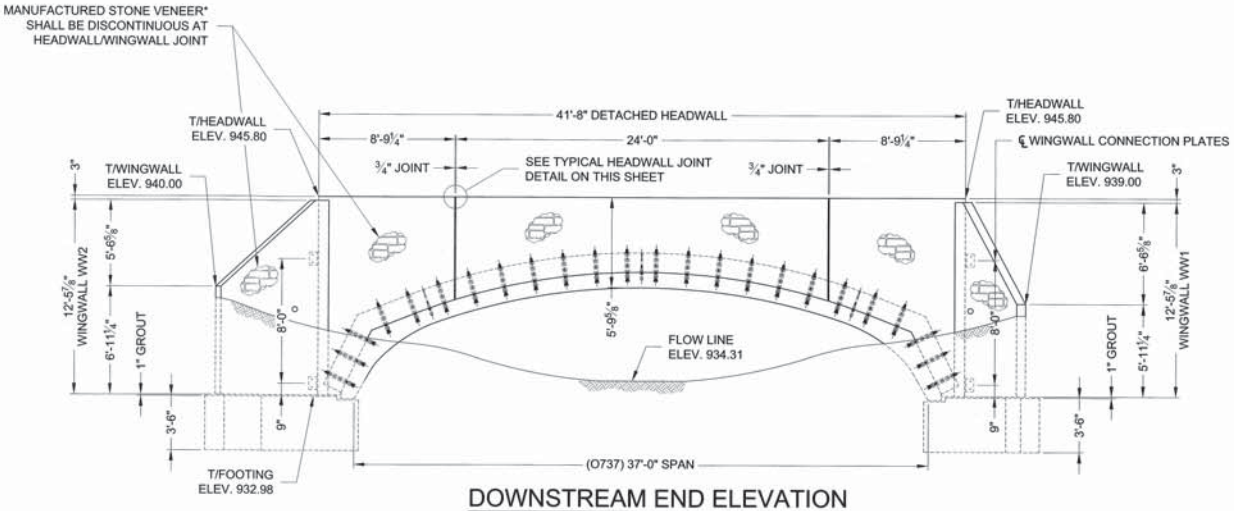

DOWNSTREAM END ELEVATION

0 2' 4' 8'

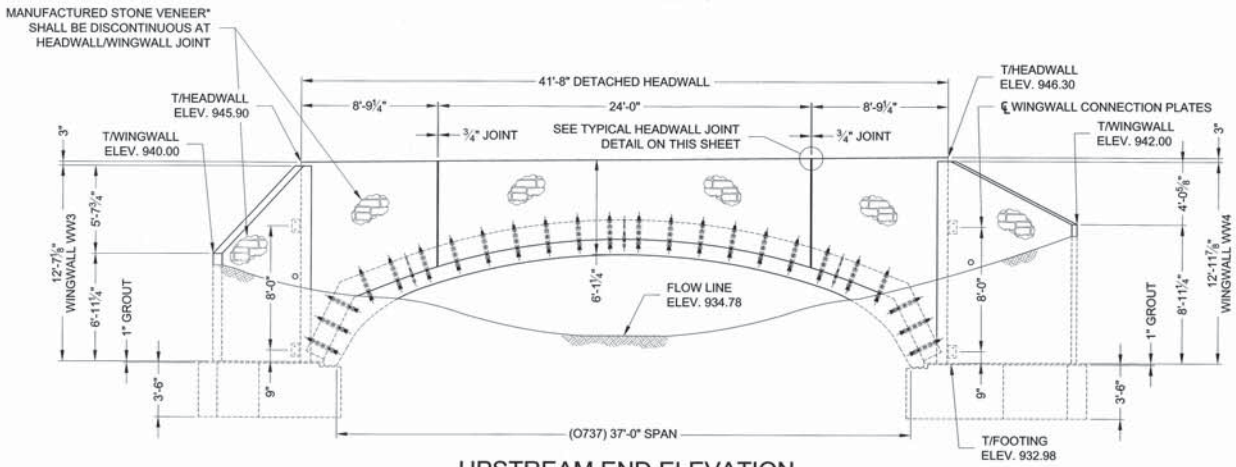

UPSTREAM END ELEVATION

0 2' 4' 8'

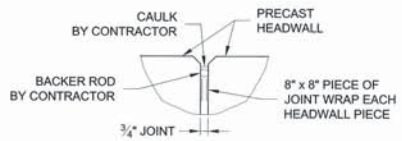

TYPICAL HEADWALL JOINT DETAIL

NOT TO SCALE

*NOTE:
MANUFACTURED STONE VENEER, AS PER PLAN (BY OTHERS)

CONTECH PROJECT No.:	532278-010
DESIGNED: KDK	DRAWN: ACR
CHECKED: JMF	APPROVED: PAC

STATE OF OHIO PHILIP ALAN CREAMER E-64516 REGISTERED PROFESSIONAL ENGINEER 9/1/15

CONTECH ENGINEERED SOLUTIONS LLC
www.ContechES.com

CON SPAN O-SERIES

REVISIONS

MARK	DATE	DESCRIPTION

CITY OF DUBLIN, FRANKLIN, UNION AND DELAWARE COUNTIES, OHIO
MASS EXCAVATION PLAN
FOR
RIVIERA
ELEVATIONS

EMH&T
Evans, Mechwart, Hambleton & Tilton, Inc.
Engineers • Surveyors • Planners • Scientists
5500 New Albany Road, Columbus, OH 43054
Phone: 614.775.4500 Toll Free: 888.775.3648
emht.com

DATE: December, 2015

SCALE: As Noted

JOB NO.: 20150910

SHEET: 17/21

I:\Marin\Project\Active\532200\532278\532278-10-CON_SPAN_O_Series\Drawings\Contract\PRE-532278-010-CO-CON-B.dwg, Last Saved By: tawk, 12/18/2015 3:17 PM, Last Printed By: rick, Monday, 6/4/2018 4:07 PM (No Xref)

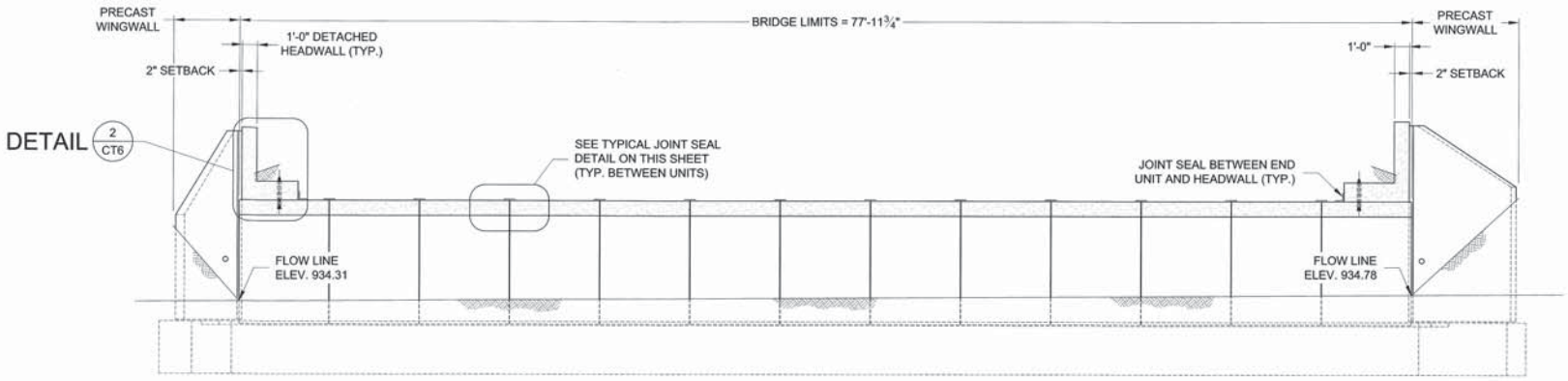

SECTION C CT2

0 2' 4' 8'

*NOTE:
MANUFACTURED STONE VENEER, AS PER PLAN (BY OTHERS)

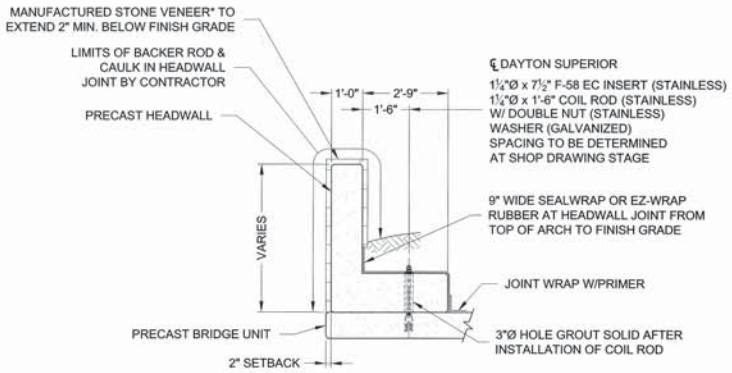

DETAIL 2 CT6

0 1' 2' 4'

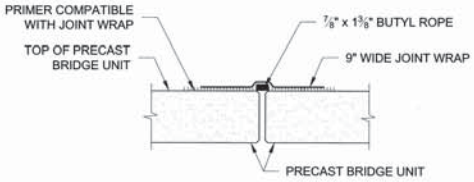

TYPICAL JOINT SEAL DETAIL

NOT TO SCALE

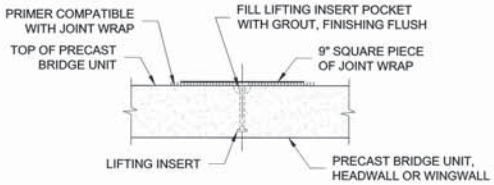

TYPICAL LIFT INSERT SEALING DETAIL

NOT TO SCALE

CONTECH PROJECT No.: 532278-010	
DESIGNED: KDK	DRAWN: ACR
CHECKED: JMF	APPROVED: PAC

STATE OF OHIO PHILIP ALAN CREAMER E-64516 REGISTERED PROFESSIONAL ENGINEER 12/18/15

CONTECH ENGINEERED SOLUTIONS LLC
www.ContechES.com

CONSPAN O-SERIES

REVISIONS

MARK	DATE	DESCRIPTION

CITY OF DUBLIN, FRANKLIN, UNION AND DELAWARE COUNTIES, OHIO
MASS EXCAVATION PLAN
FOR
RIVIERA
SECTIONS & DETAILS

EMH&T
Engineers • Surveyors • Planners • Scientists
5500 New Albany Road, Columbus, OH 43054
Phone: 614.775.4500 Fax: 614.775.4800
emht.com

DATE: December, 2015
SCALE: As Noted
JOB NO.: 20150910
SHEET: 18/21

NOTE:
CONNECTION ℄'S (P-1) MUST BE POSITIONED WITH SMALL Ø HOLES TOWARD PRECAST HEADWALL

*NOTE:
MANUFACTURED STONE VENEER, AS PER PLAN (BY OTHERS)

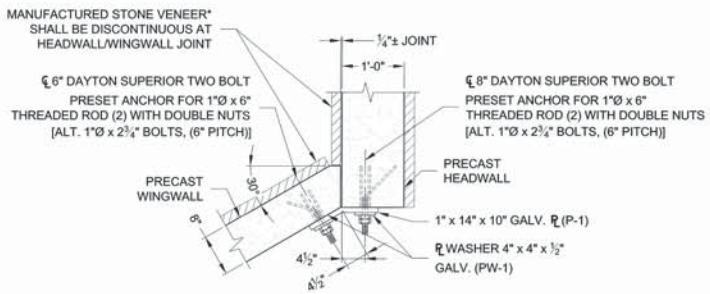

DETAIL @ HEADWALL 3 / CT2

0 1' 2'

NOTE:
CONNECTION ℄'S (P-2) MUST BE POSITIONED WITH SMALL Ø HOLES TOWARD PRECAST HEADWALL

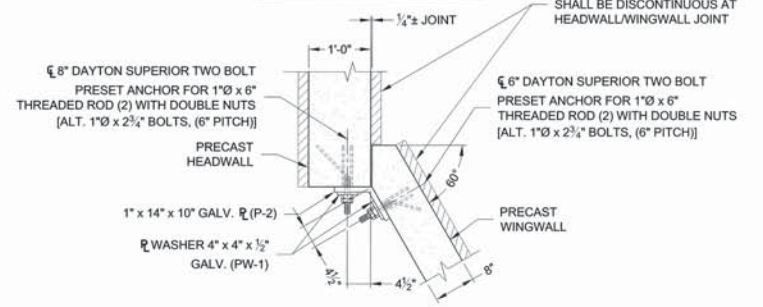

DETAIL @ HEADWALL 4 / CT2

0 1' 2'

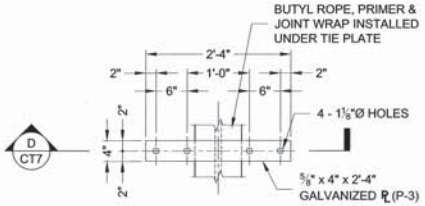

DETAIL 5 / CT2

NOT TO SCALE

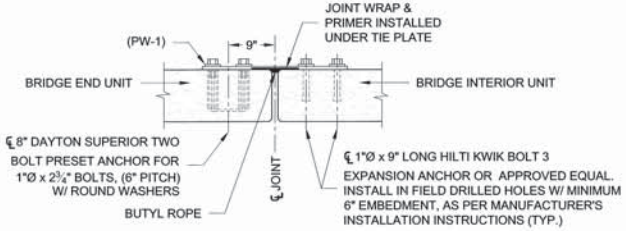

SECTION D / CT7

NOT TO SCALE

CONTECH PROJECT No.:	532278-010
DESIGNED: KDK	DRAWN: ACR
CHECKED: JMF	APPROVED: PAC

CONTECH ENGINEERED SOLUTIONS LLC
www.ContechES.com

CON SPAN. E-SERIES

STATE OF OHIO
PHILIP ALAN CREAMER
E-64516
REGISTERED
PROFESSIONAL ENGINEER
4/14/16

REVISIONS

MARK	DATE	DESCRIPTION

CITY OF DUBLIN, FRANKLIN, UNION AND DELAWARE COUNTIES, OHIO
MASS EXCAVATION PLAN
FOR
RIVIERA
DETAILS

EMH&T
Evans, Mechwart, Hambleton & Tilton, Inc.
5500 New Albany Road, Columbus, OH 43054
Phone: 614.775.4500 Fax: 614.775.4800
emht.com

DATE: December, 2015

SCALE: As Noted

JOB NO.: 20150910

SHEET: 19/21

I:\Marion\Project\Active\532000\532278\532278-10-CON_SPAN_O_Series\Drawings\Contract\PRE-532278-010-CD-CON-B.dwg, Last Saved By: tlewis, 12/18/2015 3:17 PM Last Printed By: ACR, Monday, 4/4/2016 4:02 PM (No XREF)

SPECIFICATIONS FOR MANUFACTURE AND INSTALLATION OF CON/SPAN® O-SERIES BRIDGE SYSTEMS

1. DESCRIPTION
   - 1.1. TYPE - THIS WORK SHALL CONSIST OF FURNISHING AND CONSTRUCTING A CON/SPAN® O-SERIES BRIDGE SYSTEM IN ACCORDANCE WITH THESE SPECIFICATIONS AND IN REASONABLY CLOSE CONFORMITY WITH THE LINES, GRADES, DESIGN AND DIMENSIONS SHOWN ON THE PLANS OR AS ESTABLISHED BY THE ENGINEER. IN SITUATIONS WHERE TWO OR MORE SPECIFICATIONS APPLY TO THIS WORK, THE MOST STRINGENT REQUIREMENTS SHALL GOVERN.
   - 1.2. DESIGNATION - PRECAST REINFORCED CONCRETE CON/SPAN® O-SERIES BRIDGE UNITS MANUFACTURED IN ACCORDANCE WITH THIS SPECIFICATION SHALL BE DESIGNATED BY SPAN AND RISE. PRECAST REINFORCED CONCRETE WINGWALLS AND HEADWALLS MANUFACTURED IN ACCORDANCE WITH THIS SPECIFICATION SHALL BE DESIGNATED BY LENGTH, HEIGHT, AND DEFLECTION ANGLE. PRECAST REINFORCED CONCRETE EXPRESS™ FOUNDATION UNITS MANUFACTURED IN ACCORDANCE WITH THIS SPECIFICATION SHALL BE DESIGNATED BY LENGTH, HEIGHT AND WIDTH.

2. DESIGN
   - 2.1. SPECIFICATIONS - THE PRECAST ELEMENTS ARE DESIGNED IN ACCORDANCE WITH THE "AASHTO LRFD BRIDGE SPECIFICATION" 6TH EDITION, ADOPTED BY THE AMERICAN ASSOCIATION OF STATE HIGHWAY AND TRANSPORTATION OFFICIALS, 2012. A MINIMUM OF ONE FOOT OF COVER ABOVE THE CROWN OF THE BRIDGE UNITS IS REQUIRED IN THE INSTALLED CONDITION. (UNLESS NOTED OTHERWISE ON THE SHOP DRAWINGS AND DESIGNED ACCORDINGLY.)

3. MATERIALS
   - 3.1. CONCRETE - THE CONCRETE FOR THE PRECAST ELEMENTS SHALL BE AIR-ENTRAINED WHEN INSTALLED IN AREAS SUBJECT TO FREEZE-THAW CONDITIONS, COMPOSED OF PORTLAND CEMENT, FINE AND COARSE AGGREGATES, ADMIXTURES AND WATER. AIR-ENTRAINED CONCRETE SHALL CONTAIN 6 ± 2 PERCENT AIR. THE AIR- ENTRAINING ADMIXTURE SHALL CONFORM TO AASHT0 M154. THE MINIMUM CONCRETE COMPRESSIVE STRENGTH SHALL BE AS SHOWN ON THE SHOP DRAWINGS.
     - 3.1.1. PORTLAND CEMENT - SHALL CONFORM TO THE REQUIREMENTS OF ASTM SPECIFICATIONS C150-TYPE I, TYPE II, OR TYPE III CEMENT.
     - 3.1.2. COARSE AGGREGATE - SHALL CONSIST OF STONE HAVING A MAXIMUM SIZE OF 1 INCH. AGGREGATE SHALL MEET REQUIREMENTS FOR ASTM C33.
     - 3.1.3. WATER REDUCING ADMIXTURE - THE MANUFACTURER MAY SUBMIT, FOR APPROVAL BY THE ENGINEER, A WATER-REDUCING ADMIXTURE FOR THE PURPOSE OF INCREASING WORKABILITY AND REDUCING THE WATER REQUIREMENT FOR THE CONCRETE.
     - 3.1.4. CALCIUM CHLORIDE - THE ADDITION TO THE MIX OF CALCIUM CHLORIDE OR ADMIXTURES CONTAINING CALCIUM CHLORIDE WILL NOT BE PERMITTED.
     - 3.1.5. MIXTURE - THE AGGREGATES, CEMENT AND WATER SHALL BE PROPORTIONED AND MIXED IN A BATCH MIXER TO PRODUCE A HOMOGENEOUS CONCRETE MEETING THE STRENGTH REQUIREMENTS OF THIS SPECIFICATION. THE PROPORTION OF PORTLAND CEMENT IN THE MIXTURE SHALL NOT BE LESS THAN 564 POUNDS (6 SACKS) PER CUBIC YARD OF CONCRETE.
   - 3.2. STEEL REINFORCEMENT
     - 3.2.1. THE MINIMUM STEEL YIELD STRENGTH SHALL BE 60,000 PSI, UNLESS OTHERWISE NOTED ON THE SHOP DRAWINGS.
     - 3.2.2. ALL REINFORCING STEEL FOR THE PRECAST ELEMENTS SHALL BE FABRICATED AND PLACED IN ACCORDANCE WITH THE DETAILED SHOP DRAWINGS SUBMITTED BY THE MANUFACTURER.
     - 3.2.3. REINFORCEMENT SHALL CONSIST OF WELDED WIRE FABRIC CONFORMING TO ASTM SPECIFICATION A 185 OR A 497, OR DEFORMED BILLET STEEL BARS CONFORMING TO ASTM SPECIFICATION A 615, GRADE 60. LONGITUDINAL DISTRIBUTION REINFORCEMENT MAY CONSIST OF WELDED WIRE FABRIC OR DEFORMED BILLET-STEEL BARS.
   - 3.3. STEEL HARDWARE
     - 3.3.1. BOLTS AND THREADED RODS FOR WINGWALL CONNECTIONS SHALL CONFORM TO ASTM A 307. NUTS SHALL CONFORM TO AASHTO M292 (ASTM A194) GRADE 2H. ALL BOLTS, THREADED RODS AND NUTS USED IN WINGWALL CONNECTIONS SHALL BE MECHANICALLY ZINC COATED IN ACCORDANCE WITH ASTM B695 CLASS 50.
     - 3.3.2. STRUCTURAL STEEL FOR WINGWALL CONNECTION PLATES AND PLATE WASHERS SHALL CONFORM TO AASHTO M 270 (ASTM A 709) GRADE 36 AND SHALL BE HOT DIP GALVANIZED AS PER AASHTO M111 (ASTM A123).
     - 3.3.3. INSERTS FOR WINGWALLS SHALL BE 1" DIAMETER TWO-BOLT PRESET WINGWALL ANCHORS AS MANUFACTURED BY DAYTON SUPERIOR CONCRETE ACCESSORIES, MIAMISBURG, OHIO, (800) 745-3700 AND SHALL BE MECHANICALLY ZINC COATED IN ACCORDANCE WITH ASTM B695 CLASS 50.
     - 3.3.4. FERRULE LOOP INSERTS SHALL BE F-64 FERRULE LOOP INSERTS AS MANUFACTURED BY DAYTON SUPERIOR CONCRETE ACCESSORIES, MIAMISBURG, OHIO, (800) 745-3700.
     - 3.3.5. HOOK BOLTS USED IN ATTACHED HEADWALL CONNECTIONS SHALL BE ASTM A307.
     - 3.3.6. INSERTS FOR DETACHED HEADWALL CONNECTIONS SHALL BE AISI TYPE 304 STAINLESS STEEL, EXPANDED COIL INSERTS AS MANUFACTURED BY DAYTON SUPERIOR CONCRETE ACCESSORIES, MIAMISBURG, OHIO, (800) 745-3700. COIL RODS AND NUTS USED IN HEADWALL CONNECTIONS SHALL BE AISI TYPE 304 STAINLESS STEEL. WASHERS USED IN HEADWALL CONNECTIONS SHALL BE EITHER AISI TYPE 304 STAINLESS STEEL PLATE WASHERS OR AASHTO M270 (ASTM A709) GRADE 36 PLATE WASHERS HOT DIP GALVANIZED AS PER AASHTO M111 (ASTM A123).
     - 3.3.7. MECHANICAL SPLICES OF REINFORCING BARS SHALL BE MADE USING THE DOWEL BAR SPLICER SYSTEM AS MANUFACTURED BY DAYTON SUPERIOR CONCRETE ACCESSORIES, MIAMISBURG, OHIO, (800) 745-3700, AND SHALL CONSIST OF THE DOWEL BAR SPLICER (DB-SAE) AND DOWEL-IN (DI).

4. MANUFACTURE OF PRECAST ELEMENTS - SUBJECT TO THE PROVISIONS OF SECTION 5, BELOW, THE PRECAST ELEMENT DIMENSION AND REINFORCEMENT DETAILS SHALL BE AS PRESCRIBED IN THE PLAN AND SHOP DRAWINGS PROVIDED BY THE MANUFACTURER.
   - 4.1. FORMS - THE FORMS USED IN MANUFACTURE SHALL BE SUFFICIENTLY RIGID AND ACCURATE TO MAINTAIN THE REQUIRED PRECAST ELEMENT DIMENSIONS WITHIN THE PERMISSIBLE VARIATIONS GIVEN IN SECTION 5 OF THESE SPECIFICATIONS. ALL CASTING SURFACES SHALL BE OF A SMOOTH MATERIAL.
   - 4.2. PLACEMENT OF REINFORCEMENT
     - 4.2.1. PLACEMENT OF REINFORCEMENT IN PRECAST BRIDGE UNITS - THE COVER OF CONCRETE OVER THE OUTSIDE CIRCUMFERENTIAL REINFORCEMENT SHALL BE 2" MINIMUM. THE COVER OF CONCRETE OVER THE INSIDE CIRCUMFERENTIAL REINFORCEMENT SHALL BE 1½" MINIMUM, UNLESS OTHERWISE NOTED ON THE SHOP DRAWINGS. THE CLEAR DISTANCE OF THE END CIRCUMFERENTIAL WIRES SHALL NOT BE LESS THAN 1" NOR MORE THAN 2" FROM THE ENDS OF EACH SECTION. REINFORCEMENT SHALL BE ASSEMBLED UTILIZING SINGLE OR MULTIPLE LAYERS OF WELDED WIRE FABRIC (NOT TO EXCEED 3 LAYERS), SUPPLEMENTED WITH A SINGLE LAYER OF DEFORMED BILLET-STEEL BARS, WHEN NECESSARY. WELDED WIRE FABRIC SHALL BE COMPOSED OF CIRCUMFERENTIAL AND LONGITUDINAL WIRES MEETING THE SPACING REQUIREMENTS OF 4.3, BELOW, AND SHALL CONTAIN SUFFICIENT LONGITUDINAL WIRES EXTENDING THROUGH THE BRIDGE UNIT TO MAINTAIN THE SHAPE AND POSITION OF THE REINFORCEMENT. LONGITUDINAL DISTRIBUTION REINFORCEMENT MAY BE WELDED WIRE FABRIC OR DEFORMED BILLET-STEEL BARS AND SHALL MEET THE SPACING REQUIREMENTS OF 4.3, BELOW. THE ENDS OF THE LONGITUDINAL DISTRIBUTION REINFORCEMENT SHALL BE NOT MORE THAN 3" AND NOT LESS THAN 1½" FROM THE ENDS OF THE BRIDGE UNIT.
     - 4.2.2. BENDING OF REINFORCEMENT FOR PRECAST BRIDGE UNITS - THE OUTSIDE AND INSIDE CIRCUMFERENTIAL REINFORCING STEEL FOR THE CORNERS OF THE BRIDGE SHALL BE BENT TO SUCH AN ANGLE THAT IS APPROXIMATELY EQUAL TO THE CONFIGURATION OF THE BRIDGE'S OUTSIDE CORNER.
     - 4.2.3. PLACEMENT OF REINFORCEMENT FOR PRECAST WINGWALLS AND HEADWALLS - THE COVER OF CONCRETE OVER THE LONGITUDINAL AND TRANSVERSE REINFORCEMENT SHALL BE 2" MINIMUM. THE CLEAR DISTANCE FROM THE END OF EACH PRECAST ELEMENT TO THE END OF REINFORCING STEEL SHALL NOT BE LESS THAN 1½" NOR MORE THAN 3". REINFORCEMENT SHALL BE ASSEMBLED UTILIZING A SINGLE LAYER OF WELDED WIRE FABRIC, OR A SINGLE LAYER OF DEFORMED BILLET-STEEL BARS. WELDED WIRE FABRIC SHALL BE COMPOSED OF TRANSVERSE AND LONGITUDINAL WIRES MEETING THE SPACING REQUIREMENTS OF 4.3, BELOW, AND SHALL CONTAIN SUFFICIENT LONGITUDINAL WIRES EXTENDING THROUGH THE ELEMENT TO MAINTAIN THE SHAPE AND POSITION OF THE REINFORCEMENT. LONGITUDINAL REINFORCEMENT MAY BE WELDED WIRE FABRIC OR DEFORMED BILLET-STEEL BARS AND SHALL MEET THE SPACING REQUIREMENTS OF 4.3, BELOW.
     - 4.2.4. PLACEMENT OF REINFORCMENT FOR PRECAST FOUNDATION UNITS - THE COVER OF CONCRETE OVER THE BOTTOM REINFORCEMENT SHALL BE 3 INCHES MINIMUM. THE COVER OF CONCRETE FOR ALL OTHER REINFORCEMENT SHALL BE 2 INCHES MINIMUM. THE CLEAR DISTANCE FROM THE END OF EACH PRECAST ELEMENT TO THE END OF REINFORCING STEEL SHALL NOT BE LESS THAN 2 INCHES NOR MORE THAN 3 INCHES. REINFORCEMENT SHALL BE ASSEMBLED UTILIZING A SINGLE LAYER OF WELDED WIRE FABRIC OR A SINGLE LAYER OF DEFOREMED BILLET-STEEL BARS. WELDED WIRE FABRIC SHALL BE COMPOSED OF TRANSVERSE AND LONGITUDINAL WIRES MEETING THE SPACING REQUIREMENTS OF 4.3, BELOW, AND SHALL CONTAIN SUFFICIENT LONGITUDINAL WIRES EXTENDING THROUGH THE ELEMENT TO MAINTAIN THE SHAPE AND POSITION OF THE REINFORCEMENT. LONGITUDINAL REINFORCEMENT MAY BE WELDED WIRE FABRIC OR DEFORMED BILLET-STEEL BARS AND SHALL MEET THE SPACING REQUIREMENTS OF 4.3, BELOW.
   - 4.3. LAPS, WELDS, SPACING
     - 4.3.1. LAPS, WELDS, AND SPACING FOR PRECAST BRIDGE UNITS - TENSION SPLICES IN THE CIRCUMFERENTIAL REINFORCEMENT SHALL BE MADE BY LAPPING. LAPS MAY BE TACK WELDED TOGETHER FOR ASSEMBLY PURPOSES. FOR SMOOTH WELDED WIRE FABRIC, THE OVERLAP SHALL MEET THE REQUIREMENTS OF AASHTO 5.11.2.5.2 AND 5.11.6.2. FOR DEFORMED WELDED WIRE FABRIC, THE OVERLAP SHALL MEET THE REQUIREMENTS OF AASHTO 5.11.2.5.1 AND 5.11.6.1. THE OVERLAP OF WELDED WIRE FABRIC SHALL BE MEASURED BETWEEN THE OUTER-MOST LONGITUDINAL WIRES OF EACH FABRIC SHEET. FOR DEFORMED BILLET-STEEL BARS, THE OVERLAP SHALL MEET THE REQUIREMENTS OF AASHTO 5.11.2.1 FOR SPLICES OTHER THAN TENSION SPLICES, THE OVERLAP SHALL BE A MINIMUM OF 1'-0" FOR WELDED WIRE FABRIC OR DEFORMED BILLET-STEEL BARS. THE SPACING CENTER TO CENTER OF THE CIRCUMFERENTIAL WIRES IN A WIRE FABRIC SHEET SHALL BE NOT LESS THAN 2" NOR MORE THAN 4". THE SPACING CENTER TO CENTER OF THE LONGITUDINAL WIRES SHALL NOT BE MORE THAN 8". THE SPACING CENTER TO CENTER OF THE LONGITUDINAL DISTRIBUTION STEEL FOR EITHER LINE OF REINFORCING IN THE TOP SLAB SHALL BE NOT MORE THAN 1'-4".
     - 4.3.2. LAPS, WELDS, AND SPACING FOR PRECAST WINGWALLS, HEADWALLS AND FOUNDATIONS - SPLICES IN THE REINFORCEMENT SHALL BE MADE BY LAPPING. LAPS MAY BE TACK WELDED TOGETHER FOR ASSEMBLY PURPOSES. FOR SMOOTH WELDED WIRE FABRIC, THE OVERLAP SHALL MEET THE REQUIREMENTS OF AASHTO 5.11.2.5.2 AND 5.11.6.2. FOR DEFORMED WELDED WIRE FABRIC, THE OVERLAP SHALL MEET THE REQUIREMENTS OF AASHTO 5.11.2.5.1 AND 5.11.6.1. FOR DEFORMED BILLET-STEEL BARS, THE OVERLAP SHALL MEET THE REQUIREMENTS OF AASHTO 5.11.2.1. THE SPACING CENTER-TO-CENTER OF THE WIRES IN A WIRE FABRIC SHEET SHALL BE NOT LESS THAN 2" NOR MORE THAN 8".
   - 4.4. CURING - THE PRECAST CONCRETE ELEMENTS SHALL BE CURED FOR A SUFFICIENT LENGTH OF TIME SO THAT THE CONCRETE WILL DEVELOP THE SPECIFIED COMPRESSIVE STRENGTH IN 28 DAYS OR LESS. ANY ONE OF THE FOLLOWING METHODS OF CURING OR COMBINATIONS THERE OF SHALL BE USED:
     - 4.4.1. STEAM CURING - THE PRECAST ELEMENTS MAY BE LOW-PRESSURE STEAM CURED BY A SYSTEM THAT WILL MAINTAIN A MOIST ATMOSPHERE.
     - 4.4.2. WATER CURING - THE PRECAST ELEMENTS MAY BE WATER CURED BY ANY METHOD THAT WILL KEEP THE SECTIONS MOIST.
     - 4.4.3. MEMBRANE CURING - A SEALING MEMBRANE CONFORMING TO THE REQUIREMENTS OF ASTM SPECIFICATION C309 MAY BE APPLIED AND SHALL BE LEFT INTACT UNTIL THE REQUIRED CONCRETE COMPRESSIVE STRENGTH IS ATTAINED. THE CONCRETE TEMPERATURE AT THE TIME OF APPLICATION SHALL BE WITHIN +/- 10 DEGREES F OF THE ATMOSPHERIC TEMPERATURE. ALL SURFACES SHALL BE KEPT MOIST PRIOR TO THE APPLICATION OF THE COMPOUNDS AND SHALL BE DAMP WHEN THE COMPOUND IS APPLIED.
   - 4.5. STORAGE, HANDLING & DELIVERY
     - 4.5.1. STORAGE - PRECAST CONCRETE BRIDGE ELEMENTS SHALL BE LIFTED AND STORED IN "AS-CAST" POSITION. PRECAST CONCRETE HEADWALL AND WINGWALL UNITS ARE CAST, STORED AND SHIPPED IN A FLAT POSITION. THE PRECAST ELEMENTS SHALL BE STORED IN SUCH A MANNER TO PREVENT CRACKING OR DAMAGE. STORE ELEMENTS USING TIMBER SUPPORTS AS APPROPRIATE. THE UNITS SHALL NOT BE MOVED UNTIL THE CONCRETE COMPRESSIVE STRENGTH HAS REACHED A MINIMUM OF 2500 PSI, AND THEY SHALL NOT BE STORED IN AN UPRIGHT POSITION.
     - 4.5.2. HANDLING - HANDLING DEVICES SHALL BE PERMITTED IN EACH PRECAST ELEMENT FOR THE PURPOSE OF HANDLING AND SETTING. SPREADER BEAMS MAY BE REQUIRED FOR THE LIFTING OF PRECAST CONCRETE BRIDGE ELEMENTS TO PRECLUDE DAMAGE FROM BENDING OR TORSION FORCES.
     - 4.5.3. DELIVERY - PRECAST CONCRETE ELEMENTS MUST NOT BE SHIPPED UNTIL THE CONCRETE HAS ATTAINED THE SPECIFIED DESIGN COMPRESSIVE STRENGTH, OR AS DIRECTED BY THE DESIGN ENGINEER. PRECAST CONCRETE ELEMENTS MAY BE UNLOADED AND PLACED ON THE GROUND AT THE SITE UNTIL INSTALLED. STORE ELEMENTS USING TIMBER SUPPORTS AS APPROPRIATE.
   - 4.6. QUALITY ASSURANCE - THE PRECASTER SHALL DEMONSTRATE ADHERENCE TO THE STANDARDS SET FORTH IN THE NPCA QUALITY CONTROL MANUAL. THE PRECASTER SHALL MEET EITHER SECTION 4.6.1 OR 4.6.2
     - 4.6.1. CERTIFICATION - THE PRECASTER SHALL BE CERTIFIED BY THE PRECAST/PRESTRESSED CONCRETE INSTITUTE PLANT CERTIFICATION PROGRAM OR THE NATIONAL PRECAST CONCRETE ASSOCIATION'S PLANT CERTIFICATION PROGRAM PRIOR TO AND DURING PRODUCTION OF THE PRODUCTS COVERED BY THIS SPECIFICATION.
     - 4.6.2. QUALIFICATIONS, TESTING AND INSPECTION
       - 4.6.2.1. THE PRECASTER SHALL HAVE BEEN IN THE BUSINESS OF PRODUCING PRECAST CONCRETE PRODUCTS SIMILAR TO THOSE SPECIFIED FOR A MINIMUM OF THREE YEARS. HE SHALL MAINTAIN A PERMANENT QUALITY CONTROL DEPARTMENT OR RETAIN AN INDEPENDENT TESTING AGENCY ON A CONTINUING BASIS. THE AGENCY SHALL ISSUE A REPORT, CERTIFIED BY A LICENSED ENGINEER, DETAILING THE ABILITY OF THE PRECASTER TO PRODUCE QUALITY PRODUCTS CONSISTENT WITH INDUSTRY STANDARDS.
       - 4.6.2.2. THE PRECASTER SHALL SHOW THAT THE FOLLOWING TESTS ARE PERFORMED IN ACCORDANCE WITH THE ASTM STANDARDS INDICATED. TESTS SHALL BE PERFORMED AS INDICATED IN SECTION 6 OF THESE SPECIFICATIONS.
         - 4.6.2.2.1. AIR CONTENT: C231 OR C173
         - 4.6.2.2.2. COMPRESSIVE STRENGTH: C31,C39,C497
       - 4.6.2.3. THE PRECASTER SHALL PROVIDE DOCUMENTATION DEMONSTRATING COMPLIANCE WITH THIS SECTION TO CONTECH® ENGINEERED SOLUTIONS AT REGULAR INTERVALS OR UPON REQUEST.
       - 4.6.2.4. THE OWNER MAY PLACE AN INSPECTOR IN THE PLANT WHEN THE PRODUCTS COVERED BY THIS SPECIFICATION ARE BEING MANUFACTURED.
     - 4.6.3. DOCUMENTATION - THE PRECASTER SHALL SUBMIT PRECAST PRODUCTION REPORTS TO CONTECH® ENGINEERED SOLUTIONS AS REQUIRED.

5. PERMISSIBLE VARIATIONS
   - 5.1. BRIDGE UNITS
     - 5.1.1. INTERNAL DIMENSIONS - THE INTERNAL DIMENSION SHALL VARY NOT MORE THAN 1% FROM THE DESIGN DIMENSIONS NOR MORE THAN 1½" WHICHEVER IS LESS.
     - 5.1.2. SLAB AND WALL THICKNESS - THE SLAB AND WALL THICKNESS SHALL NOT BE LESS THAN THAT SHOWN IN THE DESIGN BY MORE THAN ¼". A THICKNESS MORE THAN THAT REQUIRED IN THE DESIGN SHALL NOT BE CAUSE FOR REJECTION.
     - 5.1.3. LENGTH OF OPPOSITE SURFACES - VARIATIONS IN LAYING LENGTHS OF TWO OPPOSITE SURFACES OF THE BRIDGE UNIT SHALL NOT BE MORE THAN ½" IN ANY SECTION, EXCEPT WHERE BEVELED ENDS FOR LAYING OF CURVES ARE SPECIFIED BY THE PURCHASER.
     - 5.1.4. LENGTH OF SECTION - THE UNDERRUN IN LENGTH OF A SECTION SHALL NOT BE MORE THAN ½" IN ANY BRIDGE UNIT.
     - 5.1.5. POSITION OF REINFORCEMENT - THE MAXIMUM VARIATION IN POSITION OF THE REINFORCEMENT SHALL BE ± ½". IN NO CASE SHALL THE COVER OVER THE REINFORCEMENT BE LESS THAN 1½" FOR THE OUTSIDE CIRCUMFERENTIAL STEEL OR BE LESS THAN 1" FOR THE INSIDE CIRCUMFERENTIAL STEEL AS MEASURED TO THE EXTERNAL OR INTERNAL SURFACE OF THE BRIDGE. THESE TOLERANCES OR COVER REQUIREMENTS DO NOT APPLY TO MATING SURFACES OF THE JOINTS.
     - 5.1.6. AREA OF REINFORCEMENT - THE AREAS OF STEEL REINFORCEMENT SHALL BE THE DESIGN STEEL AREAS AS SHOWN IN THE MANUFACTURER'S SHOP DRAWINGS. STEEL AREAS GREATER THAN THOSE REQUIRED SHALL NOT BE CAUSE FOR REJECTION. THE PERMISSIBLE VARIATION IN DIAMETER OF ANY REINFORCEMENT SHALL CONFORM TO THE TOLERANCES PRESCRIBED IN THE ASTM SPECIFICATION FOR THAT TYPE OF REINFORCEMENT.
   - 5.2. WINGWALLS & HEADWALLS
     - 5.2.1. WALL THICKNESS - THE WALL THICKNESS SHALL NOT VARY FROM THAT SHOWN IN THE DESIGN BY MORE THAN ½".
     - 5.2.2. LENGTH/HEIGHT OF WALL SECTIONS - THE LENGTH AND HEIGHT OF THE WALL SHALL NOT VARY FROM THAT SHOWN IN THE DESIGN BY MORE THAN ½".
     - 5.2.3. POSITION OF REINFORCEMENT - THE MAXIMUM VARIATION IN THE POSITION OF THE REINFORCEMENT SHALL BE ± ½". IN NO CASE SHALL THE COVER OVER THE REINFORCEMENT BE LESS THAN 1½".
     - 5.2.4. SIZE OF REINFORCEMENT - THE PERMISSIBLE VARIATION IN DIAMETER OF ANY REINFORCING SHALL CONFORM TO THE TOLERANCES PRESCRIBED IN THE ASTM SPECIFICATION FOR THAT TYPE OF REINFORCING. STEEL AREA GREATER THAN THAT REQUIRED SHALL NOT BE CAUSE FOR REJECTION.
   - 5.3. FOUNDATION UNITS
     - 5.3.1. WALL THICKNESS - THE WALL THICKNESS SHALL NOT VARY FROM THAT SHOWN IN THE DESIGN BY MORE THAN ½".
     - 5.3.2. LENGTH/ HEIGHT/WIDTH OF FOUNDATION SECTIONS - THE LENGTH, HEIGHT AND WIDTH OF THE FOUNDATION UNITS SHALL NOT VARY FROM THAT SHOWN IN THE DESIGN BY MORE THAN ½".
     - 5.3.3. POSITION OF REINFORCEMENT - THE MAXIMUM VARIATION IN THE POSITION OF THE REINFORCEMENT SHALL BE ± ½". IN NO CASE SHALL THE COVER OVER THE REINFORCEMENT BE LESS THAN 1½".
     - 5.3.4. SIZE OF REINFORCEMENT - THE PERMISSIBLE VARIATION IN DIAMETER OF ANY REINFORCING SHALL CONFORM TO THE TOLERANCES PRESCRIBED IN THE ASTM SPECIFICATION FOR THAT TYPE OF REINFORCING. STEEL AREA GREATER THAN THAT REQUIRED SHALL NOT BE CAUSE FOR REJECTION.

6. TESTING/ INSPECTION
   - 6.1. TESTING
     - 6.1.1. TYPE OF TEST SPECIMEN - CONCRETE COMPRESSIVE STRENGTH SHALL BE DETERMINED FROM COMPRESSION TESTS MADE ON CYLINDERS OR CORES. FOR CYLINDER TESTING, A MINIMUM OF 4 CYLINDERS SHALL BE TAKEN FOR EACH BRIDGE ELEMENT. EACH ELEMENT SHALL BE CONSIDERED SEPARATELY FOR THE PURPOSE OF TESTING AND ACCEPTANCE.
     - 6.1.2. COMPRESSION TESTING - CYLINDERS SHALL BE MADE AND TESTED AS PRESCRIBED BY THE ASTM C39 SPECIFICATION. CYLINDERS SHALL BE CURED IN THE SAME ENVIRONMENT AS THE BRIDGE ELEMENTS. CORES SHALL BE OBTAINED AND TESTED FOR COMPRESSIVE STRENGTH IN ACCORDANCE WITH THE PROVISIONS OF THE ASTM C42 SPECIFICATION.
     - 6.1.3. ACCEPTABILITY OF CYLINDER TESTS - WHEN THE AVERAGE COMPRESSIVE STRENGTH OF ALL CYLINDERS TESTED IS EQUAL TO OR GREATER THAN THE DESIGN COMPRESSIVE STRENGTH, AND NOT MORE THAN 10% OF THE CYLINDERS TESTED HAVE A COMPRESSIVE STRENGTH LESS THAN THE DESIGN CONCRETE STRENGTH, AND NO CYLINDER TESTED HAS A COMPRESSIVE STRENGTH LESS THAN 80% OF THE DESIGN COMPRESSIVE STRENGTH, THEN THE ELEMENT SHALL BE ACCEPTED. WHEN THE COMPRESSIVE STRENGTH OF THE CYLINDERS TESTED DOES NOT CONFORM TO THESE ACCEPTANCE CRITERIA, THE ACCEPTABILITY OF THE ELEMENT MAY BE DETERMINED AS DESCRIBED IN SECTION 6.1.4, BELOW.
     - 6.1.4. ACCEPTABILITY OF CORE TESTS - THE COMPRESSIVE STRENGTH OF THE CONCRETE IN A BRIDGE ELEMENT IS ACCEPTABLE WHEN THE AVERAGE CORE TEST STRENGTH IS EQUAL TO OR GREATER THAN THE DESIGN CONCRETE STRENGTH. WHEN THE COMPRESSIVE STRENGTH OF A CORE TESTED IS LESS THAN THE DESIGN CONCRETE STRENGTH, THE PRECAST ELEMENT FROM WHICH THAT CORE WAS TAKEN MAY BE RE-CORED. WHEN THE COMPRESSIVE STRENGTH OF THE RE-CORE IS EQUAL TO OR GREATER THAN THE DESIGN CONCRETE STRENGTH, THE COMPRESSIVE STRENGTH OF THE CONCRETE IN THAT BRIDGE ELEMENT IS ACCEPTABLE.
       - 6.1.4.1. WHEN THE COMPRESSIVE STRENGTH OF ANY RECORE IS LESS THAN THE DESIGN CONCRETE STRENGTH, THE PRECAST ELEMENT FROM WHICH THAT CORE WAS TAKEN SHALL BE REJECTED.
       - 6.1.4.2. PLUGGING CORE HOLES - THE CORE HOLES SHALL BE PLUGGED AND SEALED BY THE MANUFACTURER IN A MANNER SUCH THAT THE ELEMENTS WILL MEET ALL OF THE TEST REQUIREMENTS OF THIS SPECIFICATION. PRECAST ELEMENTS SO SEALED SHALL BE CONSIDERED SATISFACTORY FOR USE.
       - 6.1.4.3. TEST EQUIPMENT - EVERY MANUFACTURER FURNISHING PRECAST ELEMENTS UNDER THIS SPECIFICATION SHALL FURNISH ALL FACILITIES AND PERSONNEL NECESSARY TO CARRY OUT THE TEST REQUIRED.
   - 6.2. INSPECTION - THE QUALITY OF MATERIALS, THE PROCESS OF MANUFACTURE, AND THE FINISHED PRECAST ELEMENTS SHALL BE SUBJECT TO INSPECTION BY THE PURCHASER.

7. JOINTS

   THE BRIDGE UNITS SHALL BE PRODUCED WITH FLAT BUTT ENDS. THE ENDS OF THE BRIDGE UNITS SHALL BE SUCH THAT WHEN THE SECTIONS ARE LAID TOGETHER THEY WILL MAKE A CONTINUOUS LINE WITH A SMOOTH INTERIOR FREE OF APPRECIABLE IRREGULARITIES, ALL COMPATIBLE WITH THE PERMISSIBLE VARIATIONS IN SECTION 5, ABOVE. THE JOINT WIDTH BETWEEN ADJACENT PRECAST UNITS SHALL NOT EXCEED ¾".

8. WORKMANSHIP/ FINISH

   THE BRIDGE UNITS, WINGWALLS, HEADWALLS AND FOUNDATION UNITS SHALL BE SUBSTANTIALLY FREE OF FRACTURES. THE ENDS OF THE BRIDGE UNITS SHALL BE NORMAL TO THE WALLS AND CENTERLINE OF THE BRIDGE SECTION, WITHIN THE LIMITS OF THE VARIATIONS GIVEN IN SECTION 5, ABOVE, EXCEPT WHERE BEVELED ENDS ARE SPECIFIED. THE FACES OF THE WINGWALLS AND HEADWALLS SHALL BE PARALLEL TO EACH OTHER, WITHIN THE LIMITS OF VARIATIONS GIVEN IN SECTION 5, ABOVE. THE SURFACE OF THE PRECAST ELEMENTS SHALL BE A SMOOTH STEEL FORM OR TROWELED SURFACE. TRAPPED AIR POCKETS CAUSING SURFACE DEFECTS SHALL BE CONSIDERED AS PART OF A SMOOTH, STEEL FORM FINISH.

9. REPAIRS

   PRECAST ELEMENTS MAY BE REPAIRED, IF NECESSARY, BECAUSE OF IMPERFECTIONS IN MANUFACTURE OR HANDLING DAMAGE AND WILL BE ACCEPTABLE IF, IN THE OPINION OF THE PURCHASER, THE REPAIRS ARE SOUND, PROPERLY FINISHED AND CURED, AND THE REPAIRED SECTION CONFORMS TO THE REQUIREMENTS OF THIS SPECIFICATION.

10. REJECTION

    THE PRECAST ELEMENTS SHALL BE SUBJECT TO REJECTION ON ACCOUNT OF ANY OF THE SPECIFICATION REQUIREMENTS. INDIVIDUAL PRECAST ELEMENTS MAY BE REJECTED BECAUSE OF ANY OF THE FOLLOWING:
    - 10.1. FRACTURES OR CRACKS PASSING THROUGH THE WALL, EXCEPT FOR A SINGLE END CRACK THAT DOES NOT EXCEED ONE HALF THE THICKNESS OF THE WALL.
    - 10.2. DEFECTS THAT INDICATE PROPORTIONING, MIXING, AND MOLDING NOT IN COMPLIANCE WITH SECTION 4 OF THESE SPECIFICATIONS.
    - 10.3. HONEYCOMBED OR OPEN TEXTURE.
    - 10.4. DAMAGED ENDS, WHERE SUCH DAMAGE WOULD PREVENT MAKING A SATISFACTORY JOINT.

CONTECH PROJECT No.: 532278-010	
DESIGNED: KDK	DRAWN: ACR
CHECKED: JMF	APPROVED: PAC

STATE OF OHIO — PHILIP ALAN CREAMER — E-64516 — REGISTERED PROFESSIONAL ENGINEER

CONTECH® ENGINEERED SOLUTIONS LLC
www.ContechES.com

CON/SPAN® O-SERIES

REVISIONS

MARK	DATE	DESCRIPTION

CITY OF DUBLIN, FRANKLIN, UNION AND DELAWARE COUNTIES, OHIO
MASS EXCAVATION PLAN
FOR
RIVIERA

SPECIFICATIONS

EMHT — emht.com

DATE	December, 2015
SCALE	As Noted
JOB NO.	20150910
SHEET	20/21

SPECIFICATIONS FOR MANUFACTURE AND INSTALLATION OF CON/SPAN® O-SERIES BRIDGE SYSTEMS (CONT'D)

11. MARKING
EACH BRIDGE UNIT SHALL BE CLEARLY MARKED BY WATERPROOF PAINT. THE FOLLOWING SHALL BE SHOWN ON THE INSIDE OF THE VERTICAL LEG OF THE BRIDGE SECTION:
BRIDGE SPAN x BRIDGE RISE
DATE OF MANUFACTURE
NAME OR TRADEMARK OF THE MANUFACTURER

12. INSTALLATION PREPARATION
TO ENSURE CORRECT INSTALLATION OF THE PRECAST CONCRETE BRIDGE SYSTEM, CARE AND CAUTION MUST BE EXERCISED IN FORMING THE SUPPORT AREAS FOR BRIDGE UNITS, HEADWALL, AND WINGWALL ELEMENTS. EXERCISING SPECIAL CARE WILL FACILITATE THE RAPID INSTALLATION OF THE PRECAST COMPONENTS.

12.1. FOOTINGS
DO NOT OVER EXCAVATE FOUNDATIONS UNLESS DIRECTED BY SITE SOIL ENGINEER TO REMOVE UNSUITABLE SOIL.

THE SITE SOILS ENGINEER SHALL CERTIFY THAT THE BEARING CAPACITY MEETS OR EXCEEDS THE FOOTING DESIGN REQUIREMENTS, PRIOR TO THE CONTRACTOR POURING OF THE FOOTINGS.

THE BRIDGE UNITS AND WINGWALLS SHALL BE INSTALLED ON CAST-IN-PLACE CONCRETE FOOTINGS. THE SIZE AND ELEVATION OF THE FOOTINGS SHALL BE AS DESIGNED BY THE ENGINEER. A KEYWAY SHALL BE FORMED IN THE TOP SURFACE OF THE BRIDGE FOOTING AS SPECIFIED ON THE PLANS. NO KEYWAY IS REQUIRED IN THE WINGWALL FOOTINGS, UNLESS OTHERWISE SPECIFIED ON THE PLANS.

THE FOOTINGS SHALL BE GIVEN A SMOOTH FLOAT FINISH AND SHALL REACH A COMPRESSIVE STRENGTH OF 2,000 PSI BEFORE PLACEMENT OF THE BRIDGE AND WINGWALL ELEMENTS. BACKFILLING SHALL NOT BEGIN UNTIL THE FOOTING HAS REACHED THE FULL DESIGN COMPRESSIVE STRENGTH.

THE FOOTING SURFACE SHALL BE CONSTRUCTED IN ACCORDANCE WITH GRADES SHOWN ON THE PLANS. WHEN TESTED WITH A 10'-0" STRAIGHT EDGE, THE SURFACE SHALL NOT VARY MORE THAN ¼" IN 10'-0".

THE FOUNDATIONS FOR PRECAST CONCRETE BRIDGE ELEMENTS AND WINGWALLS MUST BE CONNECTED BY REINFORCEMENT TO FORM ONE MONOLITHIC BODY. EXPANSION JOINTS SHALL NOT BE USED.

THE CONTRACTOR SHALL BE RESPONSIBLE FOR THE CONSTRUCTION OF THE FOUNDATIONS PER THE PLANS AND SPECIFICATIONS.

13. INSTALLATION
13.1. GENERAL - THE INSTALLATION OF THE PRECAST CONCRETE ELEMENTS SHALL BE AS EXPLAINED IN THE PUBLICATION CON/SPAN BRIDGE SYSTEMS INSTALLATION HANDBOOK.
13.1.1. LIFTING - IT IS THE RESPONSIBILITY OF THE CONTRACTOR TO ENSURE THAT A CRANE OF THE CORRECT LIFTING CAPACITY IS AVAILABLE TO HANDLE THE PRECAST CONCRETE UNITS. THIS CAN BE ACCOMPLISHED BY USING THE WEIGHTS GIVEN FOR THE PRECAST CONCRETE COMPONENTS AND BY DETERMINING THE LIFTING REACH FOR EACH CRANE UNIT. SITE CONDITIONS MUST BE CHECKED WELL IN ADVANCE OF SHIPPING TO ENSURE PROPER CRANE LOCATION AND TO AVOID ANY LIFTING RESTRICTIONS. THE LIFT ANCHORS OR HOLES PROVIDED IN EACH UNIT ARE THE ONLY MEANS TO BE USED TO LIFT THE ELEMENTS. THE PRECAST CONCRETE ELEMENTS MUST NOT BE SUPPORTED OR RAISED BY OTHER MEANS THAN THOSE GIVEN IN THE MANUALS AND DRAWINGS WITHOUT WRITTEN APPROVAL FROM CONTECH® ENGINEERED SOLUTIONS.
13.1.2. CONSTRUCTION EQUIPMENT WEIGHT RESTRICTIONS - IN NO CASE SHALL EQUIPMENT OPERATING IN EXCESS OF THE DESIGN LOAD (HL-93) BE PERMITTED OVER THE BRIDGE UNITS UNLESS APPROVED BY CONTECH® ENGINEERED SOLUTIONS.
13.1.2.1. IN THE IMMEDIATE AREA OF THE BRIDGE UNITS, THE FOLLOWING RESTRICTIONS FOR THE USE OF HEAVY CONSTRUCTION MACHINERY DURING BACKFILLING OPERATIONS APPLY:
NO CONSTRUCTION EQUIPMENT SHALL CROSS THE BARE PRECAST CONCRETE BRIDGE UNIT.
AFTER THE COMPACTED FILL LEVEL HAS REACHED A MINIMUM OF 4" OVER THE CROWN OF THE BRIDGE, CONSTRUCTION EQUIPMENT WITH A WEIGHT OF LESS THAN 10 TONS MAY CROSS THE BRIDGE.
• AFTER THE COMPACTED FILL LEVEL HAS REACHED A MINIMUM OF 1'-0" OVER THE CROWN OF THE BRIDGE, CONSTRUCTION
• EQUIPMENT WITH A WEIGHT OF LESS THAN 30 TONS MAY CROSS THE BRIDGE.
AFTER THE COMPACTED FILL LEVEL HAS REACHED THE DESIGN
• COVER, OR 2'-0" MINIMUM, OVER THE CROWN OF THE PRECAST CONCRETE BRIDGE, CONSTRUCTION EQUIPMENT WITHIN THE DESIGN LOAD LIMITS FOR THE ROAD MAY CROSS THE PRECAST CONCRETE BRIDGE.

13.2• LEVELING PAD/SHIMS - THE BRIDGE UNITS AND WINGWALLS SHALL BE SET ON HARDBOARD SHIMS CONFORMING TO ASTM D1037 OR PLASTIC SHIMS (DAYTON SUPERIOR P-80, P-81 OR APPROVED EQUAL) MEASURING 5" x 5", MINIMUM, UNLESS SHOWN OTHERWISE ON THE PLANS. A MINIMUM GAP OF ½" SHALL BE PROVIDED BETWEEN THE FOOTING AND THE BOTTOM OF THE BRIDGE'S VERTICAL LEGS OR THE BOTTOM OF THE WINGWALL. ALSO, A SUPPLY OF ¼", ½" AND ⅛" THICK HARDBOARD OR PLASTIC SHIMS FOR VARIOUS SHIMMING PURPOSES SHALL BE ON SITE.

13.3. PLACEMENT OF BRIDGE UNITS - THE BRIDGE UNITS SHALL BE PLACED AS SHOWN ON THE ENGINEER'S PLAN DRAWINGS. SPECIAL CARE SHALL BE TAKEN IN SETTING THE ELEMENTS TO THE TRUE LINE AND GRADE. THE JOINT WIDTH BETWEEN
• ADJACENT PRECAST UNITS SHALL NOT EXCEED ¾".

13.4. IT IS THE CONTRACTOR'S RESPONSIBILITY TO MAINTAIN THE STRUCTURE SPAN DURING ALL PHASES OF INSTALLATION. DUE TO THE ARCH SHAPE, BRIDGE ELEMENTS WILL TEND TO SPREAD UNDER SELF-WEIGHT. IT IS IMPERATIVE THAT ANY LATERAL SPREADING OF THE BRIDGE ELEMENTS BE AVOIDED DURING AND AFTER THEIR PLACEMENT. GENERALLY, HORIZONTAL CABLE TIES OR TIE RODS ARE SHIPPED IN THE LARGER BRIDGE ELEMENTS TO ASSIST IN PREVENTING THIS SPREADING. CABLE TIES/TIE RODS SHALL NOT BE REMOVED UNTILL BRIDGE UNITS ARE GROUTED AND GROUT HAS CURED. IT IS RECOMMENDED THAT TEMPORARY HARDWOOD BLOCKS BE USED IN CONJUNCTION WITH THE CABLE TIES/TIE RODS TO MAINTAIN SPAN. IF, HOWEVER, DUE TO SITE RESTRICTIONS, THESE CABLE TIES/TIE RODS MUST BE REMOVED PRIOR TO PLACEMENT OF THE BRIDGE ELEMANTS, THE CONTRACTOR MUST NOTIFY CONTECH (MANUFACTURER) AND REQUEST A SUGGESTED INSTALLATION PROCEDURE.

IN ADDITION, IF THE CABLE TIES/TIE RODS MUST BE REMOVED PRIOR TO SETTING ARCH UNITS, THE FOLLOWING QUALITY CONTROL PROCEDURE MUST BE FOLLOWED:
1) FIND "MEASURED SPAN" UPON ARCH UNIT'S DELIVERY TO SITE, PRIOR TO LIFTING FROM TRUCK AND REMOVING CABLE TIES/TIE RODS. "MEASURED SPAN" SHALL BE THE AVERAGE OF (3) SPAN MEASUREMENTS ALONG THE LAY LENGTH OF THE ARCH UNIT.
2) AFTER SETTING OF BRIDGE UNIT ON THE FOUNDATION, VERIFY THE SPAN. THIS "INSTALLED SPAN MEASUREMENT" SHALL NOT EXCEED THE MAXIMUM OF:
A) THE NOMINAL SPAN +½" OR
B) THE "MEASURED SPAN"
IF THE "INSTALLED SPAN MEASUREMENT" EXCEEDS THIS AMOUNT, THE ARCH UNIT SHALL BE LIFTED AND RE-SET UNTIL THE "INSTALLED SPAN MEASUREMENT" MEETS THE LIMITS.

13.5. PLACEMENT OF WINGWALLS, HEADWALLS AND FOUNDATION UNITS - THE WINGWALLS, HEADWALLS AND FOUNDATIONS SHALL BE PLACED AS SHOWN ON THE PLAN DRAWINGS. SPECIAL CARE SHALL BE TAKEN IN SETTING THE ELEMENTS TO THE TRUE LINE AND GRADE.
13.6. WATERPROOFING/JOINT PROTECTION AND SUBSURFACE DRAINAGE
13.6.1. EXTERNAL PROTECTION OF JOINTS - THE BUTT JOINT MADE BY TWO ADJOINING BRIDGE UNITS SHALL BE COVERED WITH A ⅞" x 1⅜" PREFORMED BITUMINOUS JOINT SEALANT AND A MINIMUM OF A 9" WIDE JOINT WRAP. THE SURFACE SHALL BE FREE OF DIRT BEFORE APPLYING THE JOINT MATERIAL. A PRIMER COMPATIBLE WITH THE JOINT WRAP TO BE USED SHALL BE APPLIED FOR A MINIMUM WIDTH OF 9" ON EACH SIDE OF THE JOINT. THE EXTERNAL WRAP SHALL BE CS212 BY CONCRETE SEALANTS INC., EZ-WRAP RUBBER BY PRESS-SEAL GASKET CORPORATION, SEAL WRAP BY MAR MAC MANUFACTURING CO. INC. OR APPROVED EQUAL. THE JOINT SHALL BE COVERED CONTINUOUSLY FROM THE BOTTOM OF ONE BRIDGE SECTION LEG, ACROSS THE TOP OF THE BRIDGE AND TO THE OPPOSITE BRIDGE SECTION LEG. ANY LAPS THAT RESULT IN THE JOINT WRAP SHALL BE A MINIMUM OF 6" LONG WITH THE OVERLAP RUNNING DOWNHILL.
13.6.2. IN ADDITION TO THE JOINTS BETWEEN BRIDGE UNITS, THE JOINT BETWEEN THE END BRIDGE UNIT AND THE HEADWALL SHALL ALSO BE SEALED AS DESCRIBED ABOVE. IF PRECAST WINGWALLS ARE USED, THE JOINT BETWEEN THE END BRIDGE UNIT AND THE WINGWALL SHALL BE SEALED WITH A 2'-0" STRIP OF FILTER FABRIC. ALSO, IF LIFT HOLES ARE FORMED IN THE BRIDGE UNITS, THEY SHALL BE PRIMED AND COVERED WITH A 9" x 9" SQUARE OF JOINT WRAP.
13.6.3. DURING THE BACKFILLING OPERATION, CARE SHALL BE TAKEN TO KEEP THE JOINT WRAP IN ITS PROPER LOCATION OVER THE JOINT.
13.6.4. SUBSOIL DRAINAGE SHALL BE AS DIRECTED BY THE ENGINEER.

13.7. GROUTING
13.7.1. GROUTING SHALL NOT BE PERFORMED WHEN TEMPERATURES ARE EXPECTED TO GO BELOW 35° FOR A PERIOD OF 72 HOURS. FILL THE BRIDGE-FOUNDATION KEYWAY WITH CEMENT GROUT (PORTLAND CEMENT AND WATER OR CEMENT MORTAR COMPOSED OF PORTLAND CEMENT, SAND AND WATER) WITH A MINIMUM 28-DAY COMPRESSIVE STRENGTH OF 3000 PSI. VIBRATE AS REQUIRED TO ENSURE THAT THE ENTIRE KEY AROUND THE BRIDGE ELEMENT IS COMPLETELY FILLED. IF BRIDGE ELEMENTS HAVE BEEN SET WITH TEMPORARY TIES (CABLES, BARS, ETC.) GROUT MUST ATTAIN A MINIMUM COMPRESSIVE STRENGTH OF 1500 PSI BEFORE TIES MAY BE REMOVED.
13.7.2. ALL GROUT SHALL HAVE A MAXIMUM AGGREGATE SIZE OF ¼".
13.7.3. LIFTING AND ERECTION ANCHOR RECESSES SHALL BE FILLED WITH GROUT.
13.7.4. AFTER GROUT HAS REACHED ITS DESIGN STRENGTH THE TEMPORARY HARDWOOD WEDGES SHALL BE REMOVED AND THEIR HOLES FILLED WITH GROUT.

13.8. BACKFILL
13.8.1. DO NOT PERFORM BACKFILLING DURING WET OR FREEZING WEATHER.
13.8.2. NO BACKFILL SHALL BE PLACED AGAINST ANY STRUCTURAL ELEMENTS UNTIL THEY HAVE BEEN APPROVED BY THE ENGINEER.
13.8.3. BACKFILL SHALL BE CONSIDERED AS ALL REPLACED EXCAVATION AND NEW EMBANKMENT ADJACENT TO THE PRECAST CONCRETE ELEMENTS. THE PROJECT CONSTRUCTION AND MATERIAL SPECIFICATIONS, WHICH INCLUDE THE SPECIFICATIONS FOR EXCAVATION FOR STRUCTURES AND ROADWAY EXCAVATION AND EMBANKMENT CONSTRUCTION, SHALL APPLY EXCEPT AS MODIFIED IN THIS SECTION.
13.8.4. BACKFILL ZONES:
IN-SITU SOIL
ZONE A: CONSTRUCTED EMBANKMENT OR OVERFILL.
ZONE B: FILL THAT IS DIRECTLY ASSOCIATED WITH PRECAST CONCRETE BRIDGE INSTALLATION.
• ZONE C: ROAD STRUCTURE.
13.8.5. REQUIRED BACKFILL PROPERTIES
18.8.5.1. IN-SITU SOIL - NATURAL GROUND IS TO BE SUFFICIENTLY STABLE TO ALLOW EFFECTIVE SUPPORT TO THE PRECAST
• CONCRETE BRIDGE UNITS. AS A GUIDE, THE EXISTING NATURAL GROUND SHOULD BE OF SIMILAR QUALITY AND DENSITY TO ZONE B MATERIAL FOR MINIMUM LATERAL DIMENSION OF ONE BRIDGE SPAN OUTSIDE OF THE BRIDGE FOOTING.
13.8.5.2. ZONE A - ZONE A REQUIRES FILL MATERIAL WITH SPECIFICATIONS AND COMPACTING PROCEDURES EQUAL TO THAT FOR NORMAL ROAD EMBANKMENTS.
13.8.5.3. ZONE B - GENERALLY, SOILS SHALL BE REASONABLY FREE OF ORGANIC MATTER, AND, NEAR CONCRETE SURFACES, FREE OF STONES LARGER THAN 3" IN DIAMETER SEE CHARTS FOR DETAILED DESCRIPTIONS OF ACCEPTABLE SOILS.
13.8.5.4. ZONE C - ZONE C IS THE ROAD SECTION OF GRAVEL, ASPHALT OR CONCRETE BUILT IN COMPLIANCE WITH LOCAL ENGINEERING PRACTICES.
13.8.5.5. GEOTECHNICAL ENGINEER SHALL REVIEW GRADATIONS OF ALL INTERFACING MATERIALS AND, IF NECESSARY, RECOMMEND GEOTEXTILE FILTER FABRIC (PROVIDED BY CONTRACTOR)

13.8.6. PLACING AND COMPACTING BACKFILL
DUMPING FOR BACKFILLING IS NOT ALLOWED ANY NEARER THAN 3'-0" FROM THE BRIDGE LEG.

THE FILL MUST BE PLACED AND COMPACTED IN LAYERS NOT EXCEEDING 8". THE MAXIMUM DIFFERENCE IN THE SURFACE LEVELS OF THE FILL ON OPPOSITE SIDES OF THE BRIDGE MUST NOT EXCEED 2'-0".

THE FILL BEHIND WINGWALLS MUST BE PLACED AT THE SAME TIME AS THAT OF THE BRIDGE FILL. IT MUST BE PLACED IN PROGRESSIVELY PLACED HORIZONTAL LAYERS NOT EXCEEDING 8" PER LAYER.

THE BACKFILL OF ZONE B SHALL BE COMPACTED TO A MINIMUM DENSITY OF 95% OF THE STANDARD PROCTOR, AS REQUIRED BY AASHTO T-99.

SOIL WITHIN 1'-0" OF CONCRETE SURFACES SHALL BE HAND-COMPACTED. ELSEWHERE, USE OF ROLLERS IS ACCEPTABLE. IF VIBRATING ROLLER-COMPACTORS ARE USED, THEY SHALL NOT BE STARTED OR STOPPED WITHIN ZONE B AND THE VIBRATION FREQUENCY SHOULD BE AT LEAST 30 REVOLUTIONS PER SECOND.

THE BACKFILL MATERIAL AND COMPACTING BEHIND WINGWALLS SHALL SATISFY THE CRITERIA FOR THE BRIDGE BACKFILL, ZONE B.

BACKFILL AGAINST A WATERPROOFED SURFACE SHALL BE PLACED CAREFULLY TO AVOID DAMAGE TO THE WATERPROOFING MATERIAL.
13.8.7. BRIDGE UNITS
FOR FILL HEIGHTS OVER 12 FEET (AS MEASURED FROM TOP CROWN OF BRIDGE TO FINISHED GRADE), NO BACKFILLING MAY BEGIN UNTIL A BACKFILL COMPACTION TESTING PLAN HAS BEEN COORDINATED WITH AND APPROVED BY CONTECH® ENGINEERED SOLUTIONS.
13.8.8. WINGWALLS
BACKFILL IN FRONT OF WINGWALLS SHALL BE CARRIED TO GROUND LINES SHOWN IN THE PLANS.
13.8.9. MONITORING
THE CONTRACTOR SHALL CHECK SETTLEMENTS AND HORIZONTAL DISPLACEMENT OF FOUNDATION TO ENSURE THAT THEY ARE WITHIN THE ALLOWABLE LIMIT PROVIDED BY THE ENGINEER. THESE MEASUREMENTS SHOULD GIVE AN INDICATION OF THE SETTLEMENTS AND DEFORMATIONS ALONG THE LENGTH OF THE FOUNDATIONS.

THE FIRST MEASUREMENT SHOULD TAKE PLACE AFTER THE ERECTION OF ALL PRECAST BRIDGE SYSTEM ELEMENTS, A SECOND AFTER COMPLETION OF BACKFILLING, AND A THIRD BEFORE OPENING OF THE BRIDGE TO TRAFFIC. FURTHER MEASUREMENTS MAY BE MADE ACCORDING TO LOCAL CONDITIONS.

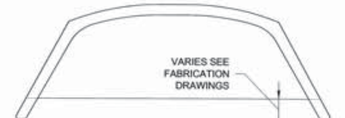

TIE RODS

ACCEPTABLE SOILS FOR USE IN ZONE B BACKFILL

TYPICAL USCS MATERIALS	AASHTO GROUP	AASHTO SUBGROUP	PERCENT PASSING US SIEVE NO. #10	#40	#200	CHARACTER OF FRACTION PASSING NO. 40 SIEVE LIQUID LIMIT	PLASTICITY INDEX	SOIL DESRIPTION
GW, GP, SP	A1	A-1a	50 MAX	30 MAX	15 MAX		6 MAX	LARGELY GRAVEL BUT CAN INCLUDE SAND AND FINES
GM, SW, SP, SM		A-1b		50 MAX	25 MAX		6 MAX	GRAVELLY SAND OR GRADED SAND, MAY INCLUDE FINES
GM, SM, ML, SP, GP	A2	A-2-4			35 MAX	40 MAX	10 MAX	SANDS, GRAVELS WITH LOW-PLASTICITY SILT FINES
SC, GC, GM		A-2-5			35 MAX	41 MIN	10 MAX	SANDS, GRAVELS WITH PLASTIC SILT FINES
SP, SM, SW	A3			51 MIN	10 MAX		NON-PLASTIC	FINE SANDS
ML, SM, SC	A4				36 MIN	40 MAX	10 MAX	LOW-COMPRESSIBILTY SILTS

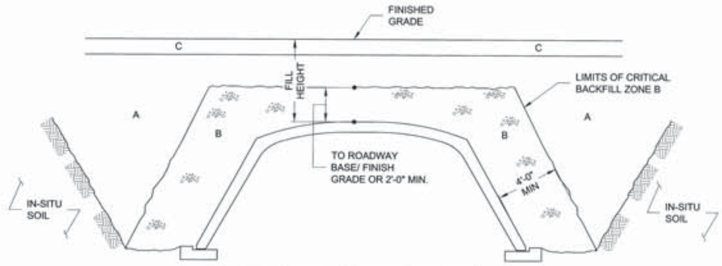

SPAN	FILL HEIGHT	ACCEPTABLE MATERIAL INSIDE ZONE B
≤ 24'-0"	≥ 12'-0"	A1, A3
≤ 24'-0"	< 12'-0"	A1, A2, A3, A4
> 24'-0"	ALL	A1, A3

BACKFILL REQUIREMENTS

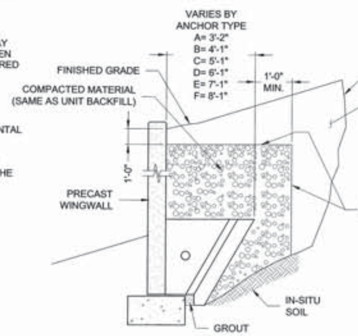

WALL BACKFILL REQUIREMENTS

CONTECH PROJECT No.:	
532278-010	
DESIGNED: KDK	DRAWN: ACR
CHECKED: JMF	APPROVED: PAC

CONTECH® ENGINEERED SOLUTIONS LLC
www.ContechES.com

CON/SPAN O-SERIES

STATE OF OHIO
PHILIP ALAN CREAMER
E-64516
REGISTERED
PROFESSIONAL ENGINEER

REVISIONS
MARK | DATE | DESCRIPTION

CITY OF DUBLIN, FRANKLIN, UNION AND DELAWARE COUNTIES, OHIO
MASS EXCAVATION PLAN
FOR
RIVIERA

SPECIFICATIONS

EMH&T
Evans, Mechwart, Hambleton & Tilton, Inc.
Engineers • Surveyors • Planners • Scientists
5500 New Albany Road, Columbus, OH 43054
Phone 614.775.4500 Toll Free 888.775.3648
emht.com

DATE
December, 2015

SCALE
As Noted

JOB NO.
20150910

SHEET
21/21