photo 1

photo 2

SIGNCOM, INC. • 527 WEST RICH STREET • COLUMBUS, OHIO 43215 • TEL: 614-228-9999 • FAX: 614-228-4326 • info@s

ncom
ion • Erection • Service

CLIENT APPROVAL _____ DATE _____

☐ PRODUCTION ART REQUIRED
Colors on Printed Documents May Vary

PROJECT NAME GERBER & MITCHELL, LLC
LOCATION 109 S. HIGH ST
CITY DUBLIN STATE _____

REVISION 1-15-16

SALES BMS
DESIGN KD
SIZE 14

DATE
SCALE
PROJ

NEW TENANT PANEL FOR
EXISTING WALL DIRECTORY PLAQUE

SCALE 3" = 1'

REPAINT EXISTING WALL PLAQUE TO MATCH NEW COLOR PALETTE.

EXISTING WALL PLAQUE - 2X REDWOOD OR 1.5" HDF W/ CENTER AREA ROUTED OUT TO RECEIVE CHANGEABLE PANEL INSERT SYSTEM – OUTER EDGE BORDER IS COVE CUT.

EXISTING DIRECTORY CAN CURRENTLY HOLD 6 TOTAL TENANT PANELS @ 3.25" TALL.

CHANGE CONFIGURATION OF "SLATZ SNAP -IN" PANEL RAILS (IF NECESSARY) TO ACCOMMODATE ONE LARGE TENANT PANEL.

HIGH PERFORMANCE VINYL GRAPHICS APPLIED TO TENANT PANEL.

WALL PLAQUE RE-INSTALLED IN SAME LOCATION UTILIZING SAME TYPE OF CONCEALED HARDWARE.
1/4" EXPANDING ANCHOR BOLTS.

COLORS
WALL PLAQUE - BENJAMIN MOORE
CW-85 RANDOLPH GREY WITH BENJAMIN MOORE
CW-20 GEDDY WHITE COVE CUT EDGE BORDER.

TENANT PANEL - RANDOLPH GREY WITH GEDDY WHITE VINYL GRAPHIC APPLIED

SIGNCOM, INC. • 527 WEST RICH STREET • COLUMBUS, OHIO 43215 • TEL: 614-228-9999 • FAX: 614-228-4326 • info@s

ICOM
ion • Erection • Service

CLIENT APPROVAL DATE

☐ PRODUCTION ART REQUIRED
Colors on Printed Documents May Vary

PROJECT NAME GERBER & MITCHELL, LLC
LOCATION 109 S. HIGH ST
CITY DUBLIN **STATE**

REVISION 1-15-16

SALES BMS
DESIGN KD
SIZE 14

DATE
SCALE
PROJ

photo 1

phot

SIGNCOM, INC. • 527 WEST RICH STREET • COLUMBUS, OHIO 43215 • TEL: 614-228-9999 • FAX: 614-228-4326 • info@s

ncom
ion • Erection • Service

CLIENT APPROVAL DATE

☐ PRODUCTION ART REQUIRED
Colors on Printed Documents May Vary

PROJECT NAME GERBER & MITCHELL, LLC
LOCATION 109 S. HIGH ST
CITY DUBLIN **STATE**

REVISION 1-15-16

SALES BMS
DESIGN KD
SIZE 14

DATE
SCALE
PROJ

NEW D.F. SIGN PANEL FOR EXISTING BRACKET

3" THICK HDU PANEL.
BACKGROUND IS RECESSED WITH BORDER & GRAPHIC RAISED 1/2" +.
INSIDE EDGE OF BORDER IS BEVELED.

PANEL INSTALLED ON EXISTING WOOD BRACKET USING EXISTING HARDWARE

REPAINT EXISTING BRACKET TO CORRESPOND WITH NEW COLOR PALETTE.

COLORS--------
BRACKET - BENJAMIN MOORE - CW 85 RANDOLPH GREY
PANEL BACKGROUND & RAISED BORDER - RANDOLPH GREY.
BEVELED INLINE BORDER - BENJAMIN MOORE
CW 20 - GEDDY WHITE
RAISED GRAPHICS - GEDDY WHITE

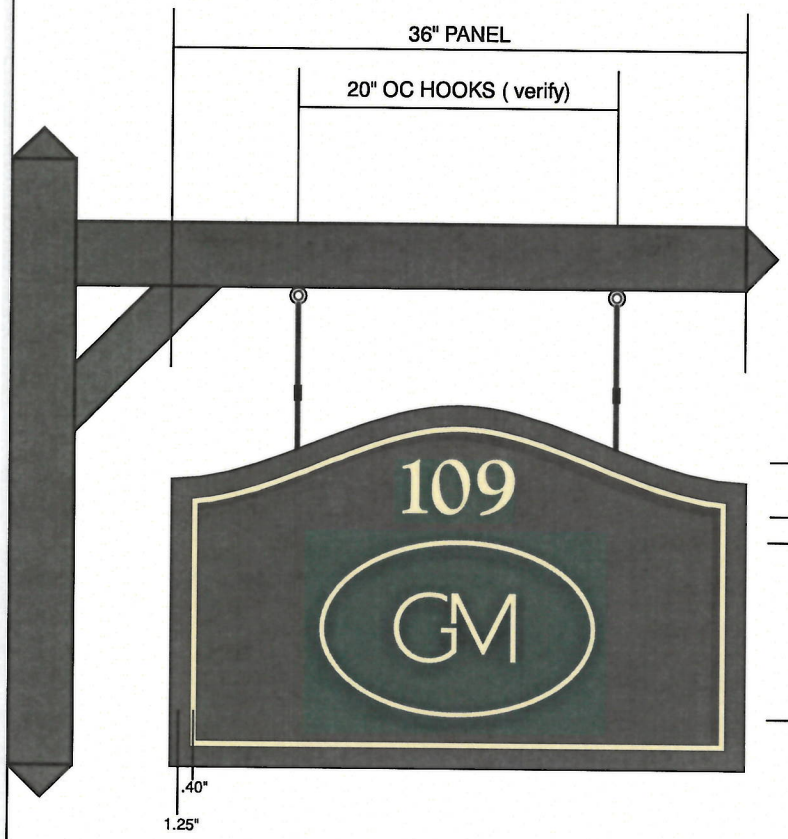

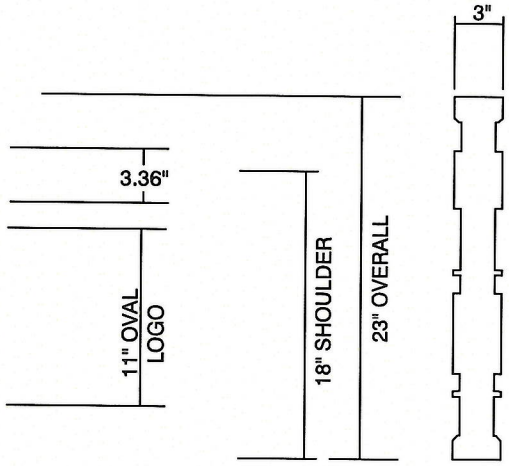

SCALE 1" = 1'

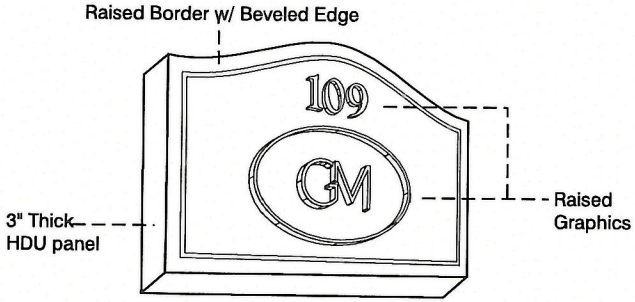

SIGNCOM, INC. • 527 WEST RICH STREET • COLUMBUS, OHIO 43215 • TEL: 614-228-9999 • FAX: 614-228-4326 • info@s

icom
ion • Erection • Service

CLIENT APPROVAL _____ DATE _____

☐ PRODUCTION ART REQUIRED
Colors on Printed Documents May Vary

PROJECT NAME GERBER & MITCHELL, LLC
LOCATION 109 S. HIGH ST
CITY DUBLIN STATE _____

REVISION 1-15-16

SALES BMS
DESIGN KD
SIZE 14

DATE
SCALE
PROJ