AT&T MOBILITY
PROJECT: LTE

AT&T SITE NO.: SOH3059
AT&T SITE NAME: DUBLIN-LTE 4C
AT&T FA NO.: 10011704
USID NO.: 59224
ATC SITE NO.: 307538
ATC ASSET NAME: DUBLIN OH

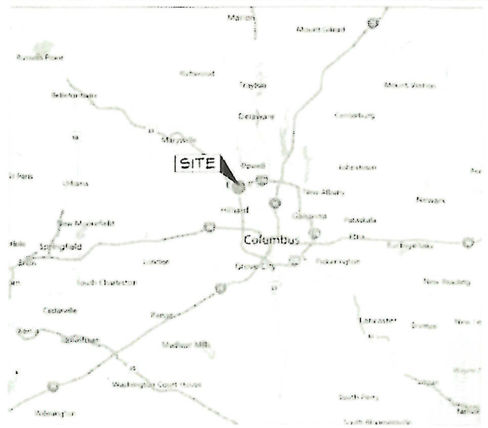

AREA MAP

VICINITY MAP

SITE ADDRESS:
5580 SHIER RINGS ROAD
DUBLIN, OH 43016

PROPERTY OWNER:
AMERICAN TOWER CORPORATION
10 PRESIDENTIAL WAY
WOBURN, MA 01801
CONTACT: WILLIAM MCELWAINE
PHONE NO.: (412) 867-5637

APPLICANT:
ATC ON BEHALF OF AT&T
2630 LIBERTY AVENUE
PITTSBURGH, PA 15222
CONTACT: WILLIAM MCELWAINE
PHONE NO.: (412) 867-5637

ENGINEER:
HARPER ENGINEERING, INC.
815 SUPERIOR AVE., SUITE 1514
CLEVELAND, OH 44114
CONTACT: DAVID HARPER
PHONE: (216) 344-3855

STRUCTURAL ENGINEER:
AMERICAN TOWER SERVICES, INC.
3500 REGENCY PARKWAY SUITE 100
CARY, NC 27518
PHONE: (919) 468-0112
FAX: (919) 466-5040

SITE ACQ. PROJECT MANAGER:
NETWORK BUILDING & CONSULTING
1777 SENTRY PARK WEST, DUBLIN HALL SUITE 210
BLUE BELL, PA 19422
CONTACT: MIKE BORTZ
PHONE: (301) 233-1664

CONSTRUCTION MANAGER:
BLACK & VEATCH TELECOM DIVISION
MATTHEW A. SMITH
FOUR PENN CENTER WEST, SUITE 326
PITTSBURGH, PA 15276
CONTACT: MATTHEW A. SMITH
MOBILE: (412) 747-9651
EMAIL: smithMA2@bv.com

LATITUDE N. 40° 5' 49.2" (N. 40.097)
LONGITUDE W. -83° 8' 24.684" (W. -83.14019)

CONSTRUCTION TYPE: NON-COMBUSTIBLE, IIB USE GROUP "U"

SITE INFORMATION

ALL WORK AND MATERIALS SHALL BE PERFORMED AND INSTALLED IN ACCORDANCE WITH THE CURRENT EDITIONS OF THE FOLLOWING CODES AS ADOPTED BY THE LOCAL GOVERNING AUTHORITIES. NOTHING IN THESE PLANS IS TO BE CONSTRUCTED TO PERMIT WORK NOT CONFORMING TO THESE CODES.

DWELLING/ BUILDING CODE	IBC 2009 (INTERNATIONAL BUILDING CODE) OBC 2011 (OHIO BUILDING CODE)
STRUCTURAL CODE	IBC 2009 (INTERNATIONAL BUILDING CODE) OBC 2011 (OHIO BUILDING CODE)
PLUMBING CODE	IPC 2009 (INTERNATIONAL PLUMBING CODE) OPC 2011 (OHIO PLUMBING CODE)
ELECTRICAL CODE	NEC 2014 (NATIONAL ELECTRICAL CODE OR LATEST) NFPA 70 (NATIONAL FIRE PROTECTION ASSOC.)
FIRE/LIFE SAFETY CODE	IFC 2012 (INTERNATIONAL FIRE CODE)
TELECOMMUNICATIONS INDUSTRY ASSOCIATION	TIA-EIA-222-G OR LATEST EDITION
NATIONAL FIRE PROTECTION ASSOCIATION	NFPA 780 LIGHTNING PROTECTION CODE

ACCESSIBILITY REQUIREMENTS:
FACILITY IS UNMANNED AND NOT FOR HUMAN HABITATION
HANDICAPPED ACCESS REQUIREMENTS ARE NOT REQUIRED IN ACCORDANCE WITH THE 2009 IBC BUILDING CODE

811 Know what's below. Call before you dig.

CODE BLOCK

SHEET	DESCRIPTION	REV.
T-1	TITLE SHEET	0
N-1	GENERAL NOTES	0
N-2	GENERAL NOTES	0
A-1	COMPOUND SITE PLAN	0
A-2	ELEVATION & ANTENNA PLANS	0
A-3	EQUIPMENT DETAILS	0
A-4	EQUIPMENT DETAILS	0
RF-1	ANTENNA DIAGRAM (ALPHA)	0
RF-2	ANTENNA DIAGRAM (BETA)	0
RF-3	ANTENNA DIAGRAM (GAMMA)	0
E-1	GROUNDING DETAILS	0
E-2	GROUNDING DETAILS	0

SHEET INDEX

AT&T PROPOSES TO MODIFY AN EXISTING UNMANNED TELECOMMUNICATIONS FACILITY.

- REMOVE (9) EXISTING ANTENNAS (3 PER SECTOR)
- REMOVE (6) EXISTING RRHS (2 PER SECTOR)
- REPLACE (12) EXISTING MOUNTING PIPES (IF REQUIRED)
- INSTALL (12) PROPOSED ANTENNAS (4 PER SECTOR)
- INSTALL (12) PROPOSED RRHS (4 PER SECTOR AT ANTENNA LEVEL)
- INSTALL PROPOSED PLATFORM MODIFICATIONS PROPOSED ON DWG. A-2 (TYP. EACH SECTOR)

RECEIVED
16-008 ARTW
JAN 19 2016
CITY OF DUBLIN
PLANNING

FILE COPY

NO AC ELECTRICAL WORK IS REQUIRED. ONLY LOW VOLTAGE DC WIRING FROM EXISTING DC POWER PLANT IS REQUIRED

PROJECT DESCRIPTION

at&t
2630 LIBERTY AVENUE
PITTSBURGH, PA 15222

AMERICAN TOWER CORPORATION

HARPER ENGINEERING, INC.
TELECOM GROUP
815 Superior Ave. Suite 1514
Cleveland, OH. 44114
Phone: (216) 344-3855
Fax: (216) 344-3856

DRAWING REVISIONS

Rev.	Description:	Date:	Mgr.
0	For Construction	12/07/15	MAD

STATE OF OHIO
THOMAS L. FERGUSON
PE 79274
PROFESSIONAL ENGINEER
12/07/2015
Engineer's Seal

AT&T SITE NO:
SOH3059

AT&T SITE NAME:
DUBLIN-LTE 4C

5580 SHIER RINGS ROAD
DUBLIN, OH 43016

SHEET NAME

TITLE SHEET

SHEET NO./ REV.: T-1/0

SCALE: AS NOTED
DRAWN BY: TSB
CHECKED BY: MAD
DATE: 12/02/15
FILE: 14-158-265

PART 1 - GENERAL

1.1 SCOPE:

A. FORM WORK, REINFORCING STEEL, ACCESSORIES, CAST-IN PLACE CONCRETE, FINISHING, CURING AND TESTING FOR STRUCTURAL CONCRETE FOUNDATIONS.

1.2 REFERENCES:

A. ACI (AMERICAN CONCRETE INSTITUTE)

1. ACI 301 SPECIFICATION FOR STRUCTURAL CONCRETE FOR BUILDINGS

2. ACI 304 RECOMMENDED PRACTICE FOR MEASURING, MIXING, TRANSPORTING AND PLACING CONCRETE.

3. ACI 305 RECOMMENDED PRACTICE FOR HOT WEATHER CONCRETING.

4. ACI 306 RECOMMENDED PRACTICE FOR COLD WEATHER CONCRETING.

5. ACI 308 STANDARD PRACTICE FOR CURING CONCRETING

6. ACI 309 STANDARD PRACTICE FOR CONSOLIDATION OF CONCRETE.

7. ACI 318 BUILDING CODE REQUIREMENTS FOR REINFORCED CONCRETE

8. ACI 347 RECOMMENDED PRACTICE FOR CONCRETE FORMWORK DRILL PIERS.

B. ASTM (AMERICAN SOCIETY FOR TESTING AND MATERIALS). THE APPLICABLE STANDARDS OF THE AMERICAN SOCIETY FOR TESTING AND MATERIALS ARE LISTED IN THE ACI STANDARDS AND ARE A PART OF THIS SPECIFICATION.

PART 2 - PRODUCTS

2.1 REINFORCING MATERIALS:

A. REINFORCING BARS: ASTM A615 GRADE 60, PROPOSED DEFORMED BILLET-STEEL BARS, PLAIN FINISH.

B. FURNISH CHAIRS, BOLSTERS, BAR SUPPORTS, SPACERS AS REQUIRED FOR SUPPORT OF REINFORCING STEEL AND WIRE FABRIC.

2.2 CONCRETE MATERIALS:

A. PORTLAND CEMENT SHALL BE TYPE II, CONFORMING TO ASTM C-150.

B. AGGREGATE SHALL CONFORM TO ASTM C-33.

1. FINE AGGREGATE SHALL BE UNIFORMLY GRADED, CLEAN SHARP, WASHED NATURAL, OR CRUSHED SAND, FREE FROM ORGANIC IMPURITIES.

2. COARSE AGGREGATE SHALL BE NATURAL WASHED GRAVEL OR WASHED CRUSHED ROCK HAVING HARD, STRONG, DURABLE PIECES, FREE FROM ADHERENT COATINGS.

3. MAXIMUM SIZE OF COARSE AGGREGATE SHALL BE 3/4 INCH IN ACCORDANCE WITH THE REQUIREMENTS OF ASTM C-33 GRADATION SIZE NO 67.

C. WATER USED IN CONCRETE MIX SHALL BE POTABLE, CLEAN, AND FREE FROM OILS, ACIDS, SALTS, CHLORIDES, ALKALI SUGAR, VEGETABLE, OR OTHER INJURIOUS SUBSTANCES.

D. THE CONCRETE SHALL CONTAIN AN AIR-ENTRAINING ADMIXTURE COMPLYING WITH THE REQUIREMENTS OF ASTM C-260 AND ACI 212.1R AND A WATER- REDUCING ADMIXTURE COMPLYING WITH THE REQUIREMENTS OF ASTM C-494 AND ACI 212.1R. ADMIXTURES SHALL BE PURCHASED AND BATHED IN LIQUID SOLUTION. THE USE OF CALCIUM CHLORIDE OR AN ADMIXTURE CONTAINING CALCIUM CHLORIDE IS PROHIBITED. ADMIXTURES SHALL BE OF THE SAME MANUFACTURER TO ASSURE COMPATIBILITY. ACCEPTABLE MANUFACTURERS ARE

1. W.R. GRACE

2. SIKA CORP

3. MASTER BUILDERS

4. EUCLID CHEMICAL CO.

5. APPROVED EQUAL

E. CURING COMPOUND SHALL CONFORM TO ASTM C309, TYPE 1, ID, CLASS A AND B AND ASTM C171 AS APPLICABLE.

2.3 CONCRETE MIX:

A. PROPORTION CONCRETE MIX IN ACCORDANCE WITH REQUIREMENTS OF ACI 301. THE STRENGTH OF CONCRETE SHALL BE AS INDICATED ON THE DRAWINGS. WHERE STRENGTH IS NOT CLEARLY INDICATED, CONCRETE SHALL HAVE A MINIMUM 28 DAY COMPRESSIVE STRENGTH OF 4000 PSI

B. THE CONCRETE MIX SHALL BE DESIGNED FOR A MAXIMUM SLUMP OF THREE INCHES (PLUS OR MINUS 1-INCH) AT THE POINT OF DISCHARGE. MIXES OF THE STIFFEST CONSISTENCY THAT CAN BE EFFICIENTLY PLACED SHALL BE USED

C. ALL CONCRETE SHALL BE TO SIX PERCENT (6%) AIR ENTRAINED (PLUS OR MINUS 1%)

D. ALL STRUCTURAL CONCRETE SHALL CONTAIN A WATER-REDUCING AGENT

PART 3 - EXECUTION

3.1 GENERAL.

A. CONSTRUCT AND ERECT THE FORM WORK IN ACCORDANCE WITH ACI 301 AND ACI 347.

B. COLD-WEATHER CONCRETING SHALL BE IN ACCORDANCE WITH ACI 306

C. HOT-WEATHER CONCRETING SHALL BE IN ACCORDANCE WITH ACI 305

3.2 INSERTS, EMBEDDED COMPONENTS AND OPENINGS.

A. CONTRACTOR SHALL CHECK ALL CIVIL, ARCHITECTURAL, STRUCTURAL AND ELECTRICAL DRAWINGS FOR OPENINGS, SLEEVES, ANCHOR BOLTS, INSERTS AND OTHER ITEMS TO BE BUILT INTO THE CONCRETE WORK.

B. COORDINATE THE WORK OF OTHER SECTION IN FORMING AND SETTING OPENINGS RECESSES, SLOTS, CHASES, ANCHORS, INSERTS AND OTHER ITEMS TO BE EMBEDDED.

C. EMBEDDED ITEMS SHALL BE SET ACCURATELY IN LOCATION, ALIGNMENT, ELEVATION AND PLUMBNESS, LOCATE AND MEASURE FROM ESTABLISHED SURVEYED REFERENCE BENCHMARKS.

D. EMBEDDED ITEMS SHALL BE ANCHORED INTO PLACE IN A MANNER TO PREVENT MOVEMENT DURING CONCRETE PLACEMENT AND CONSOLIDATION. COMPONENTS FORMING A PART OF A COMPLETE ASSEMBLY SHALL BE ALIGNED BEFORE ANCHORING INTO PLACE. PROVIDE TEMPORARY BRACING, ANCHORAGE, AND TEMPLATES AS REQUIRED TO MAINTAIN THE SETTING AND ALIGNMENT.

3.3 REINFORCEMENT PLACEMENT.

A. PLACE REINFORCEMENT ACCORDING TO CHECKED AND RELEASED DRAWINGS AND IN ACCORDANCE WITH ACI 301 AND ACI 318

B. ACCURATELY POSITION, SUPPORT AND SECURE REINFORCEMENT AGAINST DISPLACEMENT FROM FORM WORK CONSTRUCTION OR CONCRETE PLACEMENT AND CONSOLIDATION. SUPPORT REINFORCING ON METAL CHAIRS, RUNNERS, BOLSTERS, SPACERS AND HANGERS.

C. SPLICES OF REINFORCING BARS SHALL BE CLASS B UNLESS SHOWN OTHERWISE ON THE DRAWINGS. SPLICES SHALL BE STAGGERED. FULL DEVELOPMENT LENGTH SHALL BE PROVIDED ACROSS JOINTS.

D. LOCATE REINFORCING TO PROVIDE CONCRETE COVER AND SPACING SHOWN ON THE DRAWINGS. MINIMUM COVER SHALL BE AS REQUIRED BY ACI 318.

E. WELDING OF AND TO ANY REINFORCING MATERIALS INCLUDING TACK WELDING OF CROSSING BARS IS STRICTLY PROHIBITED.

3.4 CONCRETE PLACEMENT.

A. PRIOR TO PLACING CONCRETE, THE FORMS AND REINFORCEMENT SHALL BE THOROUGHLY INSPECTED; ALL TEMPORARY BRACING, TIES AND CLEATS REMOVED; ALL OPENINGS FOR UTILITIES PROPERLY BOXED, ALL FORMS PROPERLY SECURED IN THERE CORRECT POSITION AND MADE TIGHT. ALL REINFORCEMENT AND EMBEDDED ITEMS SHALL BE SECURED IN THEIR PROPER LOCATIONS. ALL OLD AND DRY CONCRETE AND DIRT SHALL BE CLEANED OFF AND ALL STANDING WATER AND OTHER FOREIGN MATERIAL REMOVED.

B. PLACING CONCRETE SHALL BE IN ACCORDANCE WITH ACI 301 AND ACI 304 AND SHALL BE CARRIED OUT AT SUCH A RATE THAT THE CONCRETE PREVIOUSLY PLACED IS STILL PLASTIC AND INTEGRATED WITH THE FRESHLY PLACED CONCRETE. CONCRETING ONCE STARTED, SHALL BE CARRIED ON AS A CONTINUOUS OPERATION UNTIL THE SECTION IS COMPLETED. NO COLD JOINTS SHALL BE ALLOWED.

C. ALL CONCRETE SHALL BE THOROUGHLY CONSOLIDATED AND COMPACTED BY VIBRATION SPACING, RODDING, OR FORKING DURING THE OPERATION OF PLACING AND DEPOSITING IN ACCORDANCE WITH ACI 309. THE CONCRETE SHALL BE THOROUGHLY WORKED AROUND REINFORCEMENT, EMBEDDED ITEMS, AND INTO THE CORNER OF THE FORMS SO AS TO ELIMINATE ALL AIR AND STONE POCKETS.

3.5 FINISHING:

A. FINISHING OF THE FLOOR SLABS SHALL BE IN ACCORDANCE WITH ACI 302.1 SECTION 7.2 WITH A MINIMUM OF THREE TROWELINGS. THE SLAB FINISH TOLERANCE AS MEASURED IN ACCORDANCE WITH ASTM E 1155 SHALL HAVE AN OVERALL TEST NUMBER FOR FLATNESS FF= 20 AND FOR LEVEL FL= 15 THE MINIMUM LOCAL NUMBER FOR FLATNESS, FF= 15 AND FOR LEVEL FL=10

B. SURFACE OF FLOOR SLAB SHALL RECEIVE TWO COATS OF CLEAR SEALER/HARDENER.

C. ABOVE GRADE WALL SURFACES SHALL HAVE A SMOOTH FORM FINISH AS DEFINED IN CHAPTER 10 OF ACI 301.

3.6 CURING

A. FRESHLY DEPOSITED CONCRETE SHALL BE PROTECTED FROM PREMATURE DRYING AND EXCESSIVELY HOT AND COLD TEMPERATURES AND SHALL BE MAINTAINED WITH MINIMUM MOISTURE LOSS AT A RELATIVELY CONSTANT TEMPERATURE FOR A PERIOD OF TIME NECESSARY FOR THE HYDRATION OF THE CEMENT AND PROPER HARDENING OF THE CONCRETE.

B. CONCRETE SHALL BE KEPT CONTINUOUSLY MOIST AT LEAST OVERNIGHT, IMMEDIATELY FOLLOWING THE INITIAL CURING. BEFORE THE CONCRETE HAS DRIED. ADDITIONAL CURING SHALL BE ACCOMPLISHED BY ONE OF THE FOLLOWING MATERIALS OR METHODS:

1. PONDING OR CONTINUOUS SPRINKLING.

2. ABSORPTIVE MAT OR FABRIC KEPT CONTINUOUSLY WET.

3. NON-ABSORPTIVE FILM (POLYETHYLENE) OVER PREVIOUSLY SPRINKLED SURFACE.

4. SAND OR OTHER COVERING KEPT CONTINUOUSLY WET.

5. CONTINUOUS STEAM (NOT EXCEEDING 150 F.) OR VAPOR MIST BATH.

6. SPRAYED-ON CURING COMPOUND APPLIED IN TWO COATS, SPRAYED IN PERPENDICULAR DIRECTION.

C. THE FINAL CURING SHALL CONTINUE UNTIL THE CUMULATIVE NUMBER OF DAYS OR FRACTION THEREOF, NOT NECESSARILY CONSECUTIVE, DURING WHICH TEMPERATURE OF THE AIR IN CONTACT WITH CONCRETE IS ABOVE 50F HAS TOTALED SEVEN (7) DAYS. CONCRETE SHALL NOT BE PERMITTED TO FREEZE DURING THE CURING PERIOD. RAPID DRYING AT THE END OF THE CURING PERIOD SHALL BE PREVENTED

at&t
2670 LIBERTY AVENUE
PITTSBURGH, PA 15222

AMERICAN TOWER CORPORATION

HARPER ENGINEERING, INC.
TELECOM GROUP
815 Superior Ave. Suite 1514
Cleveland, OH 44114
Phone: (216) 344-3855
Fax (216) 344-3856

DRAWING REVISIONS

Rev.	Description	Date.	Mgr.
0	For Construction	12/07/15	MAD

STATE OF OHIO
THOMAS L. FERGUSON
PE 79274
REGISTERED PROFESSIONAL ENGINEER
12/7/2015

AT&T SITE NO:
SOH3059

AT&T SITE NAME:
DUBLIN-LTE 4C

5580 SHIER RINGS ROAD
DUBLIN, OH 43016

SHEET NAME:

GENERAL NOTES

SHEET NO / REV.: N-1/0

SCALE: AS NOTED
DRAWN BY: TJF
CHECKED BY: MAD
DATE: 12.07.15
FILE: 14-136.DWG

GENERAL CONSTRUCTION

1. FOR THE PURPOSE OF CONSTRUCTION DRAWINGS, THE FOLLOWING DEFINITIONS SHALL APPLY GENERAL CONTRACTOR - OVERLAND CONTRACTING INC. (B&V) CONTRACTOR, (CONSTRUCTION) OWNER - AT&T

2. ALL SITE WORK SHALL BE COMPLETED AS INDICATED ON THE DRAWINGS AND AT&T PROJECT SPECIFICATIONS.

3. GENERAL CONTRACTOR SHALL VISIT THE SITE AND SHALL FAMILIARIZE HIMSELF WITH ALL CONDITIONS AFFECTING THE PROPOSED WORK AND SHALL MAKE PROVISIONS. GENERAL CONTRACTOR SHALL BE RESPONSIBLE FOR FAMILIARIZING HIMSELF WITH ALL CONTRACT DOCUMENTS, FIELD CONDITIONS, DIMENSIONS, AND CONFIRMING THAT THE WORK MAY BE ACCOMPLISHED AS SHOWN PRIOR TO PROCEEDING WITH CONSTRUCTION. ANY DISCREPANCIES SHALL BE BROUGHT TO THE ATTENTION OF THE ENGINEER PRIOR TO THE COMMENCEMENT OF WORK.

4. ALL MATERIALS FURNISHED AND INSTALLED SHALL BE IN STRICT ACCORDANCE WITH ALL APPLICABLE CODES, REGULATIONS, AND ORDINANCES. GENERAL CONTRACTOR SHALL ISSUE ALL APPROPRIATE NOTICES AND COMPLY WITH ALL LAWS, ORDINANCES, RULES, REGULATIONS, AND LAWFUL ORDERS OF ANY PUBLIC AUTHORITY REGARDING THE PERFORMANCE OF WORK.

5. ALL WORK CARRIED OUT SHALL COMPLY WITH ALL APPLICABLE MUNICIPAL AND UTILITY COMPANY SPECIFICATIONS AND LOCAL JURISDICTIONAL CODES, ORDINANCES, AND APPLICABLE REGULATIONS.

6. UNLESS NOTED OTHERWISE, THE WORK SHALL INCLUDE FURNISHING MATERIALS, EQUIPMENT, APPURTENANCES AND LABOR NECESSARY TO COMPLETE ALL INSTALLATIONS AS INDICATED ON THE DRAWINGS.

7. PLANS ARE NOT TO BE SCALED. THESE PLANS ARE INTENDED TO BE A DIAGRAMMATIC OUTLINE ONLY UNLESS OTHERWISE NOTED. DIMENSIONS SHOWN ARE TO FINISH SURFACES UNLESS OTHERWISE NOTED. SPACING BETWEEN EQUIPMENT IS THE MINIMUM REQUIRED CLEARANCE. THEREFORE IT IS CRITICAL TO FIELD VERIFY DIMENSIONS. SHOULD THERE BE ANY QUESTIONS REGARDING THE CONTRACT DOCUMENTS, THE CONTRACTOR SHALL BE RESPONSIBLE FOR OBTAINING A CLARIFICATION FROM THE ENGINEER PRIOR TO PROCEEDING WITH THE WORK. DETAILS ARE INTENDED TO SHOW DESIGN INTENT. MODIFICATIONS MAY BE REQUIRED TO SUIT JOB DIMENSIONS OR CONDITIONS AND SUCH MODIFICATIONS SHALL BE INCLUDED AS PART OF WORK AND PREFARED BY THE ENGINEER PRIOR TO PROCEEDING WITH WORK.

8. THE CONTRACTOR SHALL INSTALL ALL EQUIPMENT AND MATERIALS IN ACCORDANCE WITH MANUFACTURER'S RECOMMENDATIONS UNLESS SPECIFICALLY STATED OTHERWISE.

9. IF THE SPECIFIED EQUIPMENT CANNOT BE INSTALLED AS SHOWN ON THESE DRAWINGS, THE CONTRACTOR SHALL PROPOSE AN ALTERNATIVE INSTALLATION SPACE FOR APPROVAL BY THE ENGINEER PRIOR TO PROCEEDING.

10. GENERAL CONTRACTOR SHALL BE RESPONSIBLE FOR THE SAFETY OF WORK AREA, ADJACENT AREAS AND BUILDING OCCUPANTS THAT ARE LIKELY TO BE AFFECTED BY THE WORK UNDER THIS CONTRACT. WORK SHALL CONFIRM TO ALL OSHA REQUIREMENTS AND THE LOCAL JURISDICTION.

11. GENERAL CONTRACTOR SHALL COORDINATE WORK AND SCHEDULE WORK ACTIVITIES WITH OTHER DISCIPLINES.

12. ERECTION SHALL BE DONE IN A WORKMANLIKE MANNER BY COMPETENT EXPERIENCED WORKMAN IN ACCORDANCE WITH APPLICABLE CODES AND THE BEST ACCEPTED PRACTICE. ALL MEMBERS SHALL BE LAID PLUMB AND TRUE AS INDICATED ON THE DRAWINGS.

13. SEAL PENETRATIONS THROUGH FIRE RATED AREAS WITH UL LISTED MATERIALS APPROVED BY LOCAL JURISDICTION. CONTRACTOR SHALL KEEP AREA CLEAN, HAZARD FREE, AND DISPOSE OF ALL DEBRIS.

14. WORK PREVIOUSLY COMPLETED IS REPRESENTED BY LIGHT SHADED LINES AND NOTES. THE SCOPE OF WORK FOR THIS PROJECT IS REPRESENTED BY DARK SHADED LINES AND NOTES. CONTRACTOR SHALL NOTIFY THE GENERAL CONTRACTOR OF ANY EXISTING CONDITIONS THAT DEVIATE FROM THE DRAWINGS PRIOR TO BEGINNING CONSTRUCTION.

15. CONTRACTOR SHALL PROVIDE WRITTEN NOTICE TO THE CONSTRUCTION MANAGER 48 HOURS PRIOR TO COMMENCEMENT OF WORK.

16. THE CONTRACTOR SHALL PROTECT EXISTING IMPROVEMENTS, PAVEMENTS, CURBS, LANDSCAPING AND STRUCTURES. ANY DAMAGED PART SHALL BE REPAIRED AT CONTRACTOR'S EXPENSE TO THE SATISFACTION OF THE OWNER.

17. THE CONTRACTOR SHALL CONTACT UTILITY LOCATING SERVICES PRIOR TO THE START OF CONSTRUCTION.

18. GENERAL CONTRACTOR SHALL COORDINATE AND MAINTAIN ACCESS FOR ALL TRADES AND CONTRACTORS TO THE SITE AND/OR BUILDING.

19. THE GENERAL CONTRACTOR SHALL BE RESPONSIBLE FOR SECURITY OF THE SITE FOR THE DURATION OF CONSTRUCTION UNTIL JOB COMPLETION.

20. THE GENERAL CONTRACTOR SHALL MAINTAIN IN GOOD CONDITION ONE COMPLETE SET OF PLANS WITH ALL REVISIONS, ADDENDA AND CHANGE ORDERS ON THE PREMISES AT ALL TIMES.

21. THE GENERAL CONTRACTOR SHALL PROVIDE PORTABLE FIRE EXTINGUISHERS WITH A RATING OF NOT LESS THAN 2-A OR 2-A 10-B C AND SHALL BE WITHIN 25 FEET OF TRAVEL DISTANCE TO ALL PORTIONS OF WHERE THE WORK IS BEING COMPLETED DURING CONSTRUCTION.

22. ALL EXISTING ACTIVE SEWER, WATER, GAS, ELECTRIC, AND OTHER UTILITIES SHALL BE PROTECTED AT ALL TIMES, AND WHERE REQUIRED FOR THE PROPER EXECUTION OF THE WORK, SHALL BE RELOCATED AS DIRECTED BY THE ENGINEER. EXTREME CAUTION SHOULD BE USED BY THE CONTRACTOR WHEN EXCAVATING OR DRILLING PIERS AROUND OR NEAR UTILITIES. CONTRACTOR SHALL PROVIDE SAFETY TRAINING FOR THE WORKING CREW. THIS SHALL INCLUDE BUT NOT BE LIMITED TO A) FALL PROTECTION, B) CONFINED SPACE C) ELECTRICAL SAFETY, AND D) TRENCHING & EXCAVATION.

23. ALL EXISTING INACTIVE SEWER, WATER, GAS, ELECTRIC, AND OTHER UTILITIES WHICH INTERFERE WITH THE EXECUTION OF THE WORK, SHALL BE REMOVED, CAPPED, PLUGGED OR OTHERWISE DISCONNECTED AT POINTS WHICH WILL NOT INTERFERE WITH THE EXECUTION OF THE WORK, AS DIRECTED BY THE RESPONSIBLE ENGINEER, AND SUBJECT TO THE APPROVAL OF THE OWNER AND/OR LOCAL UTILITIES.

24. THE AREAS OF THE OWNER'S PROPERTY DISTURBED BY THE WORK AND NOT COVERED BY THE TOWER, EQUIPMENT OR DRIVEWAY, SHALL BE GRADED TO A UNIFORM SLOPE, AND STABILIZED TO PREVENT EROSION.

25. CONTRACTOR SHALL MINIMIZE DISTURBANCE TO THE EXISTING SITE DURING CONSTRUCTION. EROSION CONTROL MEASURES, IF REQUIRED DURING CONSTRUCTION, SHALL BE IN CONFORMANCE WITH THE FEDERAL AND LOCAL JURISDICTION FOR EROSION AND SEDIMENT CONTROL.

26. NO FILL OR EMBANKMENT MATERIAL SHALL BE PLACED ON FROZEN GROUNDING. FROZEN MATERIALS, SNOW OR ICE SHALL NOT BE PLACED IN ANY FILL OR EMBANKMENT.

27. THE SUBGRADE SHALL BE BROUGHT TO A SMOOTH UNIFORM GRADE AND COMPACTED TO 95 PERCENT STANDARD PROCTOR DENSITY UNDER PAVEMENT AND STRUCTURES AND 80 PERCENT STANDARD PROCTOR DENSITY IN OPEN SPACE. ALL TRENCHES IN PUBLIC RIGHT OF WAY SHALL BE BACKFILLED WITH FLOWABLE FILL OR OTHER MATERIAL PRE-APPROVED BY THE LOCAL JURISDICTION.

28. ALL NECESSARY RUBBISH, STUMPS, DEBRIS, STICKS, STONES, AND OTHER REFUSE SHALL BE REMOVED FROM THE SITE AND DISPOSED OF IN A LAWFUL MANNER.

29. ALL BROCHURES, OPERATING AND MAINTENANCE MANUALS, CATALOGS, SHOP DRAWINGS, AND OTHER DOCUMENTS SHALL BE TURNED OVER TO THE GENERAL CONTRACTOR AT COMPLETION OF CONSTRUCTION AND PRIOR TO PAYMENT.

30. CONTRACTOR SHALL SUBMIT A COMPLETE SET OF AS-BUILT REDLINES TO THE GENERAL CONTRACTOR UPON COMPLETION OF PROJECT AND PRIOR TO FINAL PAYMENT.

DIVISION 5 - STRUCTURAL STEEL:

1. DETAIL, FABRICATE AND ERECT STRUCTURAL STEEL IN ACCORDANCE WITH THE 9TH EDITION AISC MANUAL OF STEEL CONSTRUCTION (ASD), AWS D1.1 AND OBC 2011/IBC 2009. STRUCTURAL STEEL SHALL BE AS FOLLOWS.
   A. ASTM A36, GRADE 36; ROLLED STEEL, RODS, PLATES U-BOLTS & ANCHOR BOLTS.
   B. ASTM A325 BOLTS, BEARING TYPE
   C. ALL STEEL SHALL BE HOT-DIP GALVANIZED IN ACCORDANCE WITH ASTM A123
2. THE CONTRACTOR SHALL PROVIDE ADEQUATE SHORING AND/OR BRACING WHERE REQUIRED DURING CONSTRUCTION UNTIL ALL CONNECTIONS ARE COMPLETE.
3. ANY FIELD CHANGES OR SUBSTITUTIONS SHALL HAVE PRIOR APPROVAL FROM THE CONSTRUCTION MANAGER.
4. TIGHTEN HIGH STRENGTH BOLTS TO A SNUG TIGHT CONDITION WHERE ALL PLIES IN A JOINT ARE IN FIRM CONTACT BY EITHER
   A. A FEW IMPACTS OF A IMPACT WRENCH
   B. THE FULL EFFORT OF A PERSON USING A SPUD WRENCH.
5. WELDING
   A. ALL WELDING SHALL BE DONE BY CERTIFIED WELDERS. CERTIFICATION DOCUMENTS SHALL BE MADE AVAILABLE FOR ENGINEER'S AND/OR OWNER'S REVIEW IF REQUESTED.
   B. WELDING ELECTRODES FOR MANUAL SHIELDED METAL ARC WELDING SHALL CONFORM TO ASTM A-233, E70 SERIES. BARE ELECTRODES AND GRANULAR FLUX USED IN THE SUBMERGED ARC PROCESS SHALL CONFORM TO AISC SPECIFICATIONS.
   C. FIELD WELDING SHALL BE DONE AS PER AWS D1.1 REQUIREMENTS. VISUAL INSPECTION IS ACCEPTABLE.
6. PROTECTION
   A. UPON COMPLETION OF ERECTION, INSPECT ALL GALVANIZED STEEL AND PAINT ANY FIELD CUTS, WELDS OR GALVANIZED BREAKS WITH ZINC BASED PAINT COLOR TO MATCH THE GALVANIZING PROCESS

at&t
2670 LIBERTY AVENUE
PITTSBURGH, PA 15222

AMERICAN TOWER CORPORATION

HARPER ENGINEERING, INC.
TELECOM GROUP
815 Superior Ave. Suite 1514
Cleveland, OH. 44114
Phone: (216) 344-3855
Fax: (216) 344-3856

DRAWING REVISIONS

Rev.	Description	Date	Mgr.
0	For Construction	12/07/15	MAD

STATE OF OHIO
THOMAS L. FERGUSON
PE 79274
REGISTERED PROFESSIONAL ENGINEER
12/07/2015

AT&T SITE NO:
SOH3059

AT&T SITE NAME:
DUBLIN-LTE 4C

5580 SHIER RINGS ROAD
DUBLIN, OH 43016

SHEET NAME

GENERAL NOTES

SHEET No./Rev.
N-2/0

SCALE: AS NOTED
DRAWN BY: TEC
CHECKED BY: MAD
Date: 12/07/15
FILE: 14-152-005

NOTES:

1. SEE DRAWING N-1 & N-2 FOR GENERAL NOTES
2. SEE DETAIL 1 ON DRAWING A-2 FOR ELEVATION.
3. SEE DRAWING A-2 FOR ANTENNA LAYOUTS.

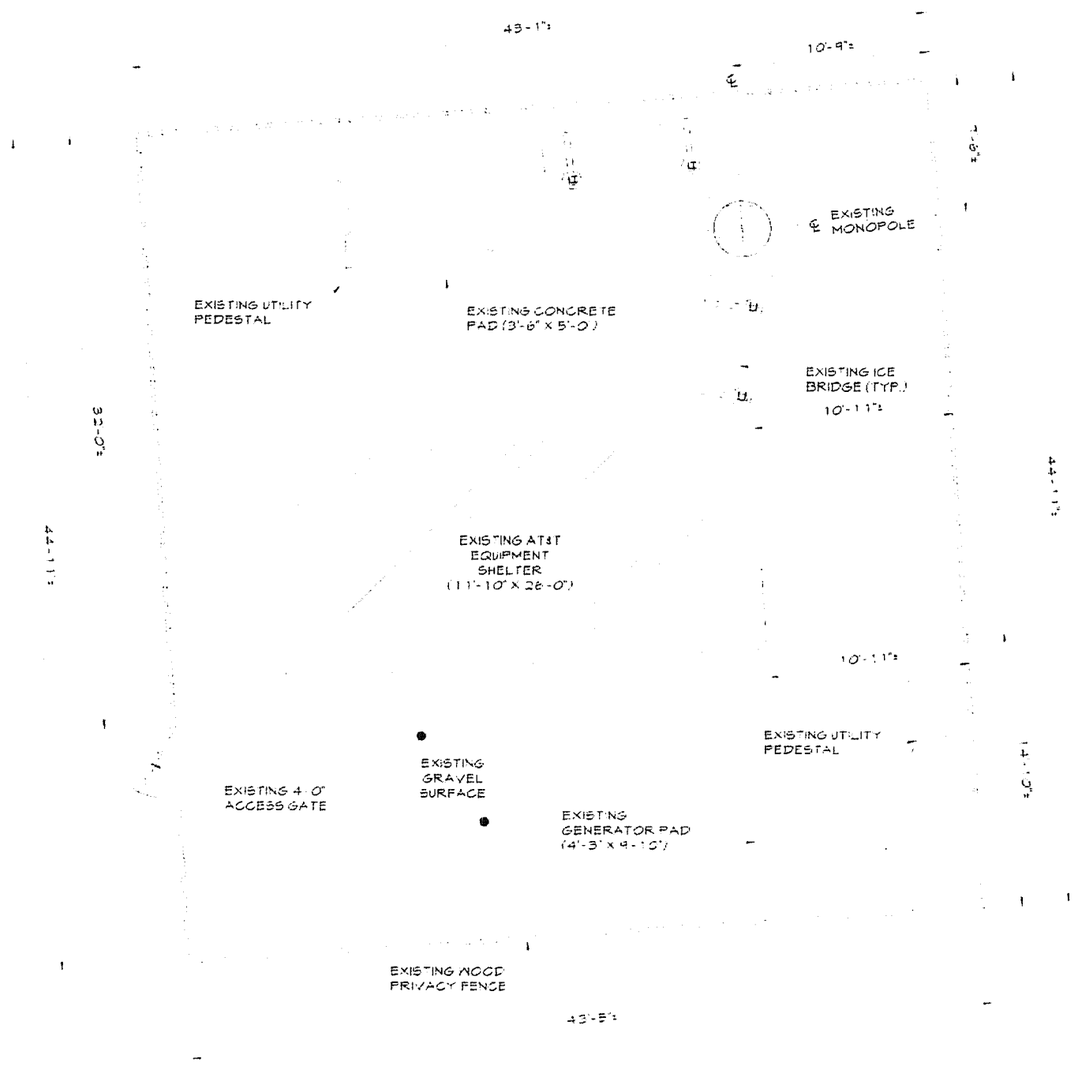

COMPOUND SITE PLAN
SCALE: 1/4"=1'-0"
0 1 2 3 4 5

N

at&t
2630 LIBERTY AVENUE
PITTSBURGH, PA 15222

AMERICAN TOWER
CORPORATION

HARPER ENGINEERING, INC.
TELECOM GROUP
815 Superior Ave. Suite 1514
Cleveland, OH. 44114
Phone: (216) 344-3855
Fax: (216) 344-3856

DRAWING REVISIONS

Rev	Description:	Date.	Mgr
0	For Construction	12/07/15	MAD

STATE OF OHIO
THOMAS L. FERGUSON
PE 79274
REGISTERED PROFESSIONAL ENGINEER
12/07/2015
Engineer's Seal

AT&T SITE NO:
SOH3059

AT&T SITE NAME:
DUBLIN-LTE 4C

5580 SHIER RINGS ROAD
DUBLIN, OH 43016

SHEET NAME

COMPOUND SITE PLAN

SHEET No. Rev.
A-1/0

SCALE AS NOTED
DRAWN BY TJB
CHECKED BY MAD
Date 12/02/15
FILE 14-138-2[illegible]

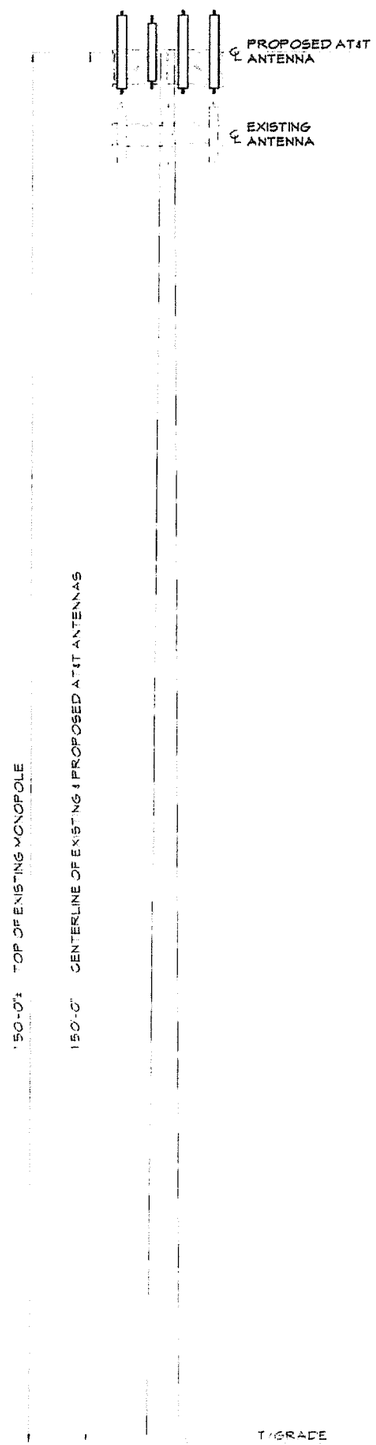

1 TOWER ELEVATION

SCALE: 1/8" = 1'

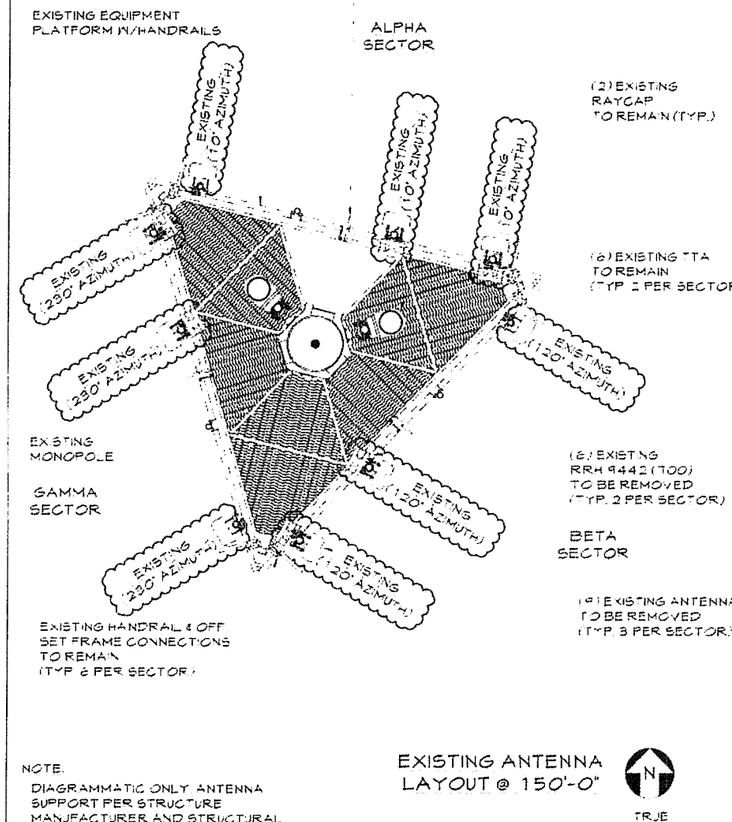

NOTE:
DIAGRAMMATIC ONLY. ANTENNA SUPPORT PER STRUCTURE MANUFACTURER AND STRUCTURAL ANALYSIS.

EXISTING ANTENNA LAYOUT @ 150'-0"

2 EXISTING ANTENNA LAYOUT

SCALE: 3/8" = 1'-0"

NOTES:

1.) NO ELECTRICAL WORK REQUIRED FOR THIS INSTALLATION. NO NEW VOLTAGE REQUIRED.

2.) CONTRACTOR SHALL VERIFY RF INFORMATION WITH LATEST AT&T RF DATA SHEETS PRIOR TO INSTALLATION.

3.) DIAGRAMATIC ONLY, ANTENNAS, CABLES AND EQUIPMENT TO BE MOUNTED IN ACCORDANCE WITH STRUCTURAL ANALYSIS BY OTHERS

ANTENNA REPLACEMENT NOTES:

1.) CONTRACTOR TO INSPECT THE CONDITION OF EXISTING MOUNTING PIPES. CONFIRM THE FOLLOWING.

- CORROSION, IF MOUNTS ARE FOUND TO BE CORRODED, CONTACT AT&T REP. FOR DIRECTION.
- CHECK CONDITION OF ATTACHMENT BOLTS. IF FOUND LOOSE, TIGHTEN TO ORIGINAL SPECIFICATIONS (ASC, TURN OF THE NUT METHOD).
- IF BOLTS ARE MISSING, REPLACE TO SUIT.
- CONFIRM MOUNTING PIPE IS ADEQUATELY SIZED TO ACCOMMODATE PROPOSED ANTENNA INSTALL

2.) ALL WORK DEPICTED ON THIS DRAWING DESIGNED IN ACCORDANCE WITH OBC 2011 AND AMENDMENTS.

3.) CONTRACTOR TO VERIFY EACH SECTOR HAS (6) EXISTING CONNECTIONS PER SECTOR TO EXIST. OFFSET FRAME. (3) CONNECTIONS ON TOP RAIL & (3) CONNECTIONS ON BOTTOM RAIL. IF REQUIRED INSTALL ADDITIONAL CONNECTION TO MATCH EXSITING.

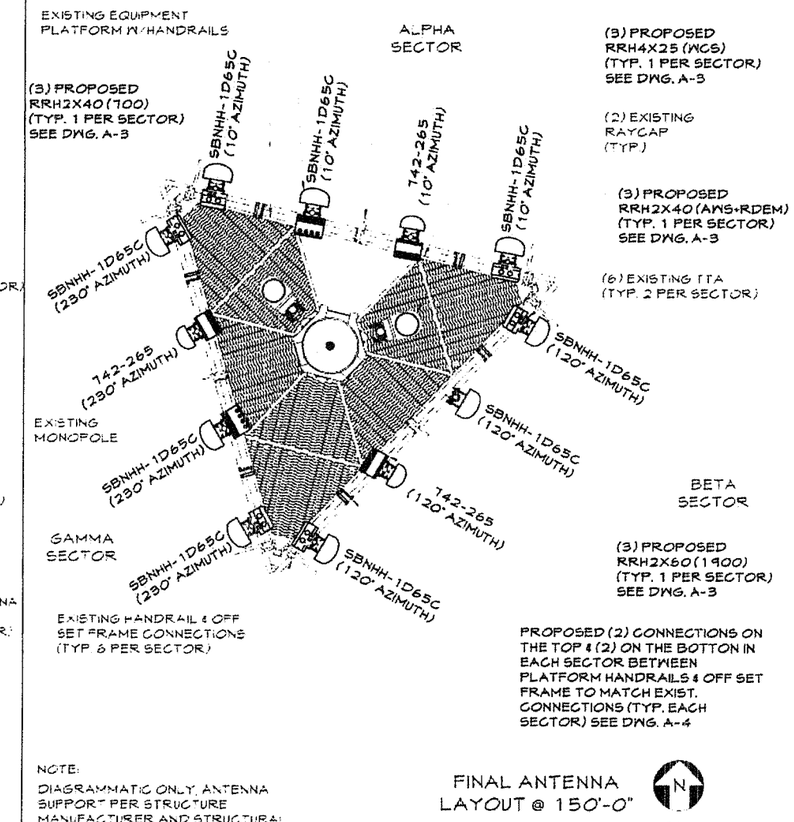

NOTE:
DIAGRAMMATIC ONLY. ANTENNA SUPPORT PER STRUCTURE MANUFACTURER AND STRUCTURAL ANALYSIS.

FINAL ANTENNA LAYOUT @ 150'-0"

3 FINAL ANTENNA LAYOUT

SCALE: 3/8" = 1'-0"

at&t
2630 LIBERTY AVENUE
PITTSBURGH, PA 15222

AMERICAN TOWER CORPORATION

HARPER ENGINEERING, INC.
TELECOM GROUP
815 Superior Ave. Suite 1514
Cleveland, OH. 44114
Phone: (216) 344-3855
Fax: (216) 344-3856

DRAWING REVISIONS

Rev.	Description:	Date:	Mgr.
0	For Construction	12/07/15	MAD

STATE OF OHIO
THOMAS L. FERGUSON
PE 79274
REGISTERED PROFESSIONAL ENGINEER
12/07/2015
Engineer's Seal

AT&T SITE NO:
SOH3059

AT&T SITE NAME:
DUBLIN-LTE 4C

5580 SHIER RINGS ROAD
DUBLIN, OH 43016

SHEET NAME

ELEVATION & ANTENNA PLANS

SHEET NO./Rev.

A-2/0

SCALE: AS NOTED
DRAWN BY: TDF
CHECKED BY: MAD
DATE: 12/07/15
FILE: 14-1304-2HS

NOTE:
MOUNTING OPTIONS ARE INCLUDED PRODUCTS WITH ANTENNA PURCHASE

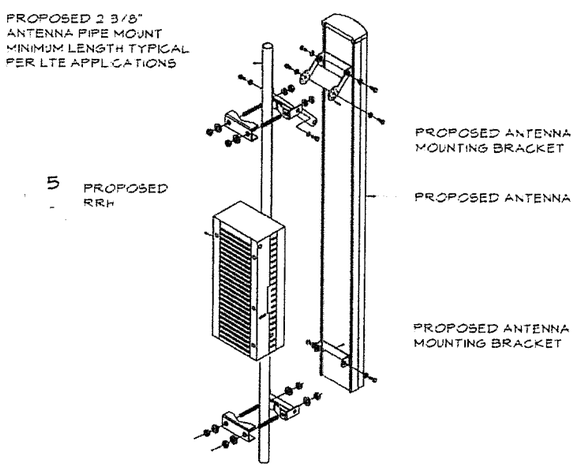

1 ANTENNA MOUNTING WITH RRH DETAIL

SCALE: NTS

ANDREW ANTENNA SBNHH-1D65C

RADOME MATERIAL:	FIBERGLASS, UV RESISTANT
RADOME COLOR	LIGHT GRAY
DIMENSIONS, HxWxD	2438x301x181mm (96.0x11.9"x7.1")
WEIGHT, WITH PRE-MOUNTED BRACKETS:	49.6 lbs
WIND LOAD:	879.0 N @ 150km/h 197.6 lbf @ 150km/h
CONNECTOR:	7/16 DIN FEMALE

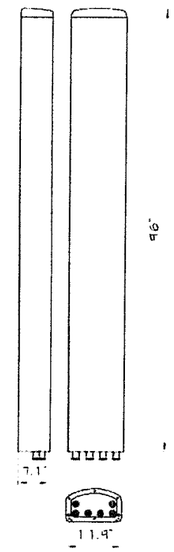

2 PROPOSED LTE ANTENNA SPECIFICATIONS

SCALE: NTS

KATHREIN ANTENNA 742-265

RADOME MATERIAL	FIBERGLASS UV RESISTANT
RADOME COLOR:	LIGHT GRAY
DIMENSIONS, HxWxD:	1916x262x139mm (75.4"x10.3"x5.5")
WEIGHT, WITH PRE-MOUNTED BRACKETS:	50.7 lbs
CONNECTOR:	7/16 DIN FEMALE

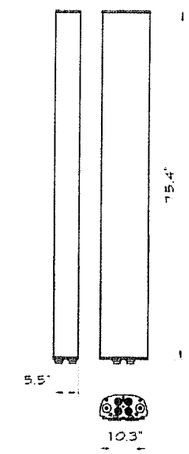

3 PROPOSED LTE ANTENNA SPECIFICATIONS

SCALE: NTS

NOTE:
ANTENNA NOT SHOWN FOR CLARITY

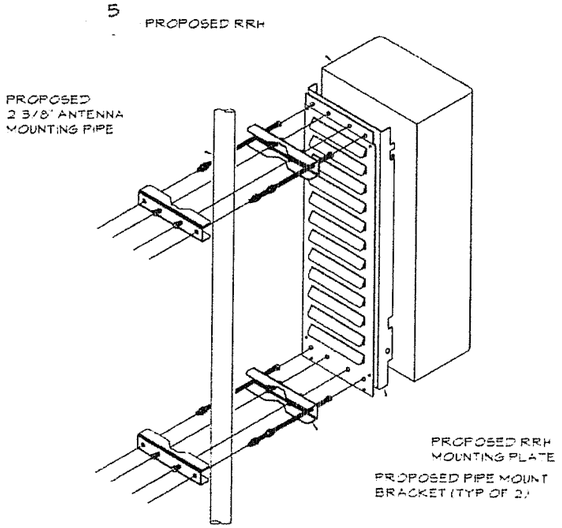

4 RRH ANTENNA PIPE MOUNT DETAIL

SCALE: NTS

ALCATEL-LUCENT RRH2X40 (07U)

DIMENSIONS (WxDxH):	15"x8.2"x15.4" (381x208.23x391.16mm)
TOTAL WEIGHT	LESS THAN 50lbs
POWER SUPPLY:	-48 VDC
TEMPERATURE	-40°C to +50°C

ALCATEL-LUCENT RRH2X40 (AWS)+RDEM

DIMENSIONS (WxDxH):	15.4"x9.1"x25.2" (391.16x231.14x640.08mm)
TOTAL WEIGHT	47 lbs
POWER SUPPLY	-48 VDC
TEMPERATURE	-40°C to +50°C

ALCATEL-LUCENT RRH2X60 (1900A-4R)

DIMENSIONS (WxDxH):	20.1"x11.2"x7.6" (510x285x193)
TOTAL WEIGHT, kg (lb):	46.0lbs (21.0kg)
POWER SUPPLY:	-48 VDC
TEMPERATURE	-40°C -50°C

ALCATEL-LUCENT RRH4X25-WCS

DIMENSIONS (WxDxH):	12"x8.7"x31.5" (305x220x800mm)
TOTAL WEIGHT:	70lbs
POWER SUPPLY:	-48 VDC
TEMPERATURE:	40°C +55°C

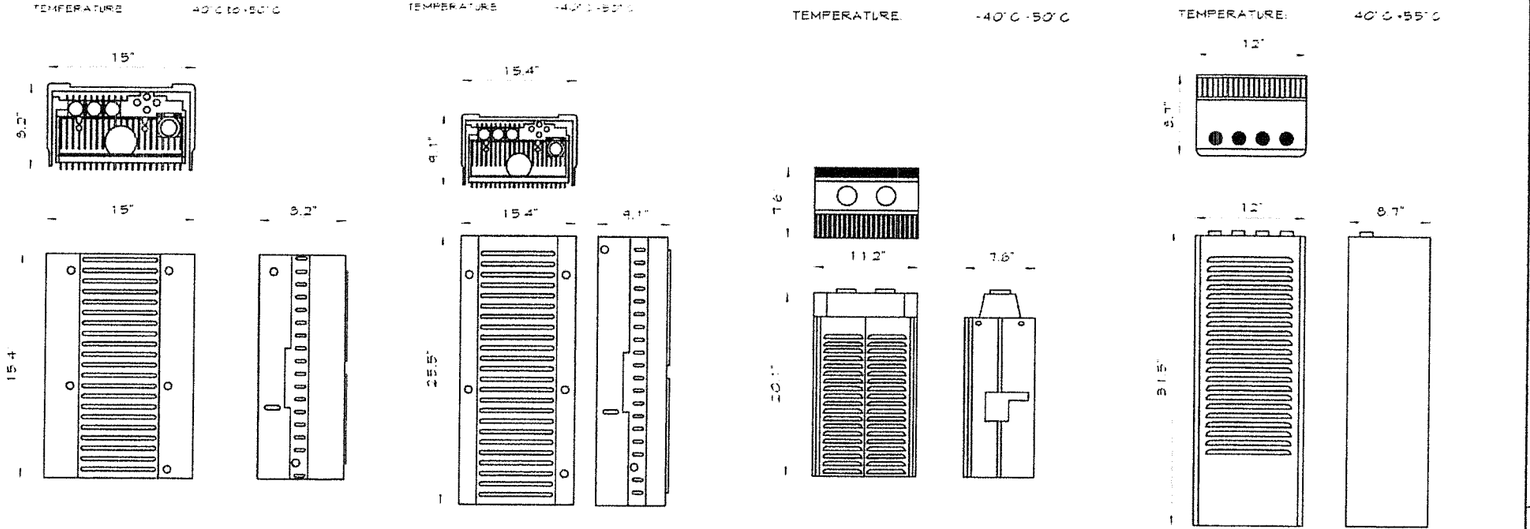

5 RRH SPECIFICATIONS

SCALE: NTS

at&t
2690 LIBERTY AVENUE
PITTSBURGH PA 15222

AMERICAN TOWER CORPORATION

HARPER ENGINEERING, INC.
TELECOM GROUP
815 Superior Ave. Suite 1514
Cleveland, OH 44114
Phone: (216) 344-3855
Fax: (216) 344-3856

DRAWING REVISIONS

Rev.	Description	Date	Mgr.
0	For Construction	12/07/15	MAD

STATE OF OHIO
THOMAS L FERGUSON
PE 79274
REGISTERED PROFESSIONAL ENGINEER
12/11/2015
Engineer's seal

AT&T SITE NO:
SOH3059

AT&T SITE NAME:
DUBLIN-LTE 4C

5580 SHIER RINGS ROAD
DUBLIN, OH 43016

SHEET NAME:

EQUIPMENT DETAILS

SHEET NO. Rev.: A-3/0

SCALE: AS NOTED
DRAWN BY: TSB
CHECKED BY: MAD
DATE: 12/02/15
FILE: 14-105-205

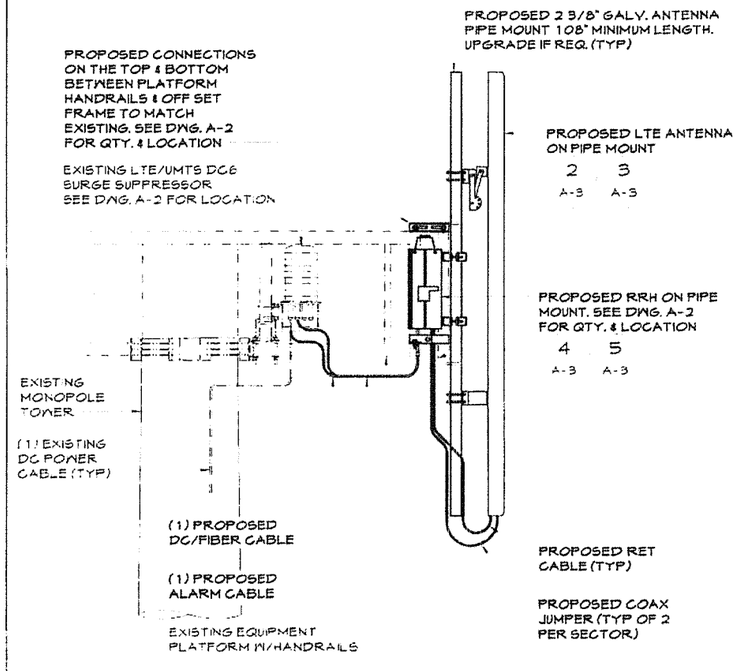

NOTES:

A. FOR ADDITIONAL STRUCTURAL STEEL GENERAL NOTES SEE DWG. N-2.

B. STRUCTURAL STEEL

1. DETAIL, FABRICATE AND ERECT STRUCTURAL STEEL IN ACCORDANCE WITH THE 9TH EDITION AISC "MANUAL OF STEEL CONSTRUCTION" (ASD), AWS D1.1 AND OBC 2011/IBC 2009
   STRUCTURAL STEEL SHALL COMPLY WITH THE FOLLOWING:
   A. ASTM A992, GRADE 50, W SECTIONS.
   B. ASTM A36, GRADE 36, CHANNELS, ANGELS, PLATES, RODS, U-BOLTS AND ANCHOR BOLTS.
   C. ALL STRUCTURAL STEEL SHALL BE HOT DIPPED GALVANIZED PER ASTM A123.
   D. STRUCTURAL BOLTED CONNECTIONS SHALL BE MADE WITH ASTM A325 BOLTS IN BEARING TYPE CONNECTIONS.
2. STRUCTURAL STEEL SHALL BE DETAILED, FURNISHED, FABRICATED, AND ERECTED IN ACCORDANCE WITH THE CURRENT PROVISIONS OF ALL APPLICABLE AISC SPECIFICATIONS AND CODE OF STANDARD PRACTICE FOR STEEL BUILDINGS AND THE AISC STRUCTURAL STEEL DETAILING MANUAL.
3. STEEL SHAPES, PLATES, BARS, PIPE, AND CONNECTION BOLTS AND WASHERS SHALL BE HOT-DIP GALVANIZED TOUCH-UP ALL STEEL AFTER ERECTION IS COMPLETE
4. DESIGN REQUIREMENTS PER OBC 2011/IBC 2009
5. THE GENERAL CONTRACTOR SHALL VERIFY ALL EXISTING CONDITIONS & DIMENSIONS AND NOTIFY THE ARCHITECT / ENGINEER OF ANY DISCREPANCIES PRIOR TO ORDERING MATERIALS OR PROCEEDING WITH CONSTRUCTION.
6. WELDING SHALL BE IN ACCORDANCE WITH THE AMERICAN WELDING SOCIETY (AWS) D1.1-2000 STRUCTURAL WELDING CODE - STEEL WELD ELECTRODES SHALL BE E7018. AT THE COMPLETION OF WELDING ALL DAMAGE TO GALVANIZED COATING SHALL BE REPAIRED.

1 NOT USED
SCALE: NTS

2 EQUIPMENT & ANTENNA MOUNTING DETAILS
SCALE: NTS

3 STRUCTURAL STEEL NOTES
SCALE: NTS

LTE COLOR CODING

LTE POWER	
700 trunk line	YELLOW
2100 trunk line	YELLOW/YELLOW
LTE POWER	
ALPHA SECTOR 700	BLUE/YELLOW
BETA SECTOR 700	BROWN/YELLOW
GAMMA SECTOR 700	GREEN/YELLOW
LTE POWER	
ALPHA SECTOR 2100	BLUE/YELLOW/YELLOW
BETA SECTOR 2100	BROWN/YELLOW/YELLOW
GAMMA SECTOR 2100	GREEN/YELLOW/YELLOW
LTE FIBER TRUNK	ORANGE
LTE FIBER JUMPERS 700	
ALPHA SECTOR 700	BLUE/ORANGE
BETA SECTOR 700	BROWN/ORANGE
GAMMA SECTOR 700	GREEN/ORANGE
LTE FIBER JUMPERS 2100	
ALPHA SECTOR 2100	BLUE/ORANGE/ORANGE
BETA SECTOR 2100	BROWN/ORANGE/ORANGE
GAMMA SECTOR 2100	GREEN/ORANGE/ORANGE

4 COLOR CODING
SCALE: NTS

5 NOT USED
SCALE: NTS

6 NOT USED
SCALE: NTS

at&t
2630 LIBERTY AVENUE
PITTSBURGH, PA 15222

AMERICAN TOWER CORPORATION

HARPER ENGINEERING, INC.
TELECOM GROUP
815 Superior Ave. Suite 1514
Cleveland, OH. 44114
Phone: (216) 344-3855
Fax (216) 344-3856

DRAWING REVISIONS

Rev.	Description.	Date	Mgr.
0	For Construction	12/07/15	MAD

STATE OF OHIO
THOMAS L. FERGUSON
PE 79274
REGISTERED PROFESSIONAL ENGINEER
12/07/2015
Engineer's Seal

AT&T SITE NO:
SOH3059

AT&T SITE NAME:
DUBLIN-LTE 4C

5530 SHIER RINGS ROAD
DUBLIN, OH 43016

SHEET NAME:

EQUIPMENT DETAILS

SHEET No./Rev
A-4/0

SCALE: AS NOTED
DRAWN BY: TSE
CHECKED BY: MAD
DATE: 12/07/15
FILE: 14-101-2-2

Location Code: [illegible] Eldorado FA Name: [illegible]

Node/Site Name: OH3059 Location Name: DUBLIN Market: SOUTHERN OH Market Cluster: OH/WESTERN PENNSYLVANIA

Comments:

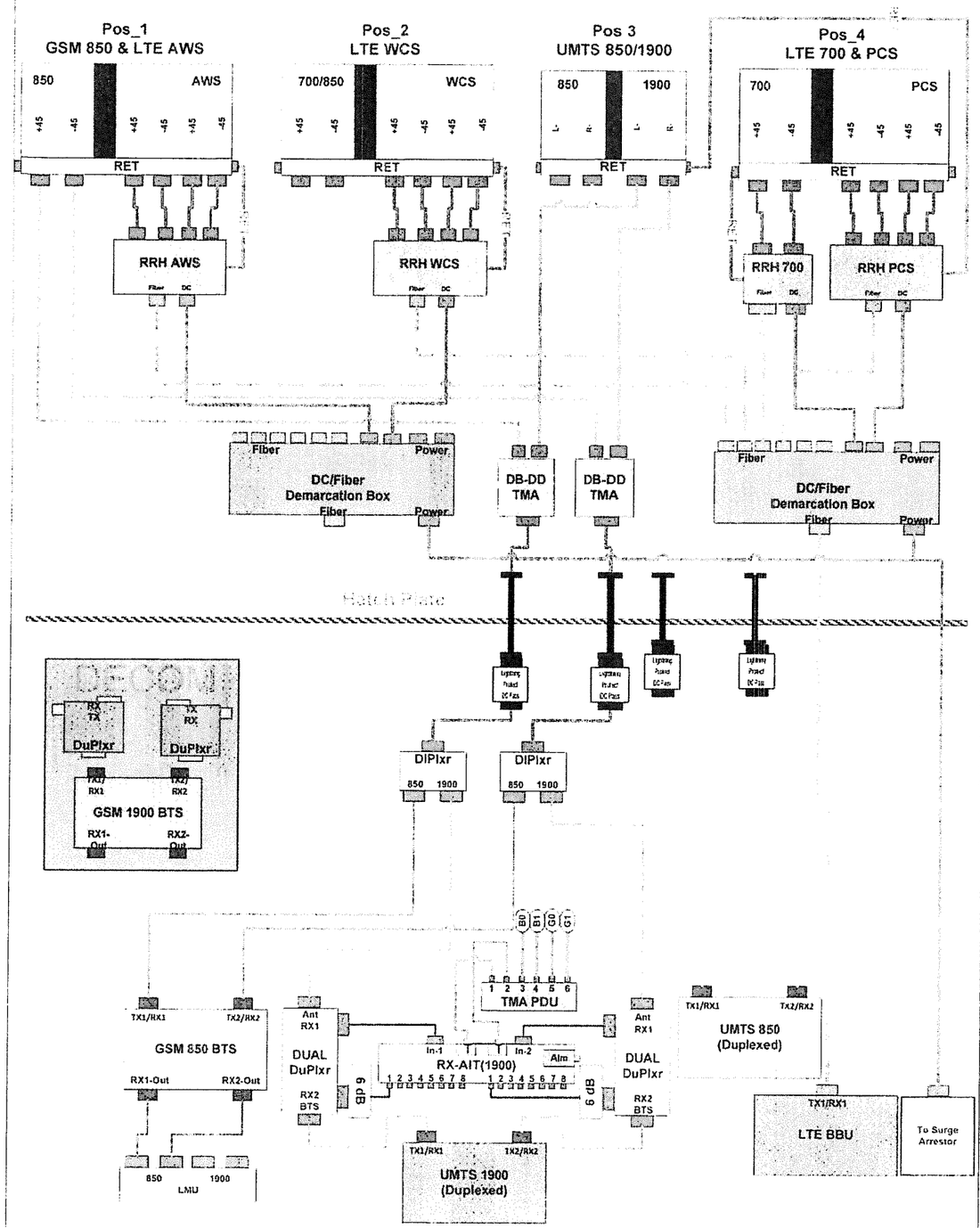

NOTE:

1.) CONTRACTOR SHALL VERIFY RF INFORMATION WITH LATEST AT&T RF DATA SHEETS PRIOR TO INSTALLATION.

2.) FUTURE AND RESERVED EQUIPMENT IS NOT SHOWN ON THE RFDS PLUMBING DIAGRAM. SEE DRAWING A-2 FOR FINAL ANTENNA COUNT.

at&t
2630 LIBERTY AVENUE
PITTSBURGH, PA 15222

AMERICAN TOWER CORPORATION

HARPER ENGINEERING, INC.
TELECOM GROUP
815 Superior Ave. Suite 1514
Cleveland, OH. 44114
Phone (216) 344-3855
Fax (216) 344-3856

DRAWING REVISIONS

Rev	Description.	Date:	Mgr.
0	For Construction	12/07/15	MAD

STATE OF OHIO
THOMAS L. FERGUSON
PE 79274
REGISTERED PROFESSIONAL ENGINEER
12/07/2015
Engineer's Seal

AT&T SITE NO:
OH3059

AT&T SITE NAME:
DUBLIN-LTE 4C

5580 SHIER RINGS ROAD
DUBLIN, OH 43016

SHEET NAME:

ANTENNA DIAGRAM (ALPHA)

SHEET NO./REV.: RF-1/0

SCALE AS NOTED
DRAWN BY: TBF
CHECKED BY: MAD
DATE: 12/07/15
FILE NAME: [illegible]

Platform Series: [illegible] Diagram File Name: [illegible]

Anti Site Name: OH3059 Location Name: DUBLIN Market: SOUTHERN OH Market Cluster: OHIO WESTERN PENNSYLVANIA

Sectors: [illegible]

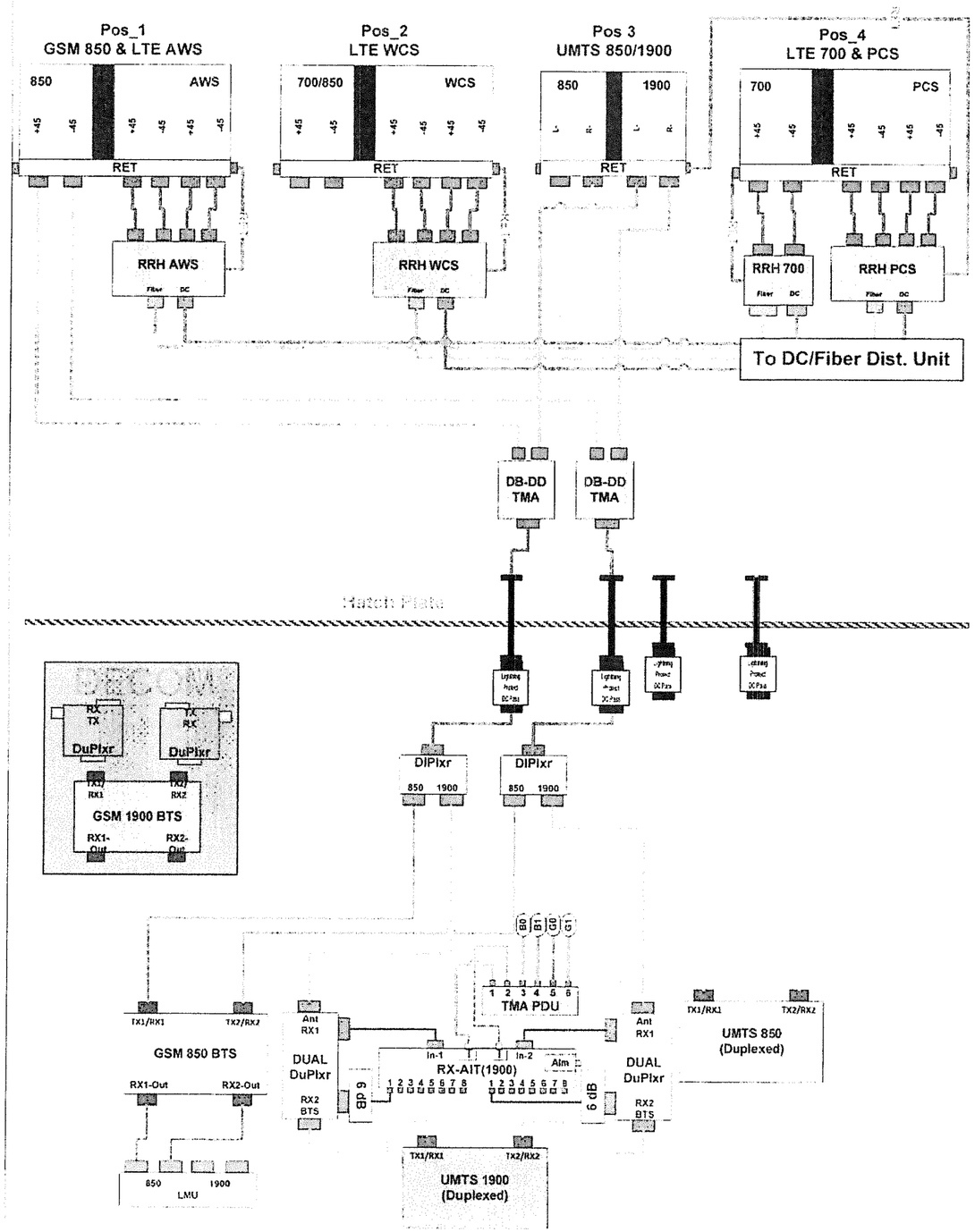

at&t
2630 LIBERTY AVENUE
PITTSBURGH, PA 15222

AMERICAN TOWER CORPORATION

HARPER ENGINEERING, INC.
TELECOM GROUP
815 Superior Ave. Suite 1514
Cleveland, OH. 44114
Phone: (216) 344-3855
Fax (216) 344-3856

DRAWING REVISIONS

Rev.	Description	Date	Mgr.
0	For Construction	12/07/15	MAD

STATE OF OHIO
THOMAS L FERGUSON
PE 79274
REGISTERED PROFESSIONAL ENGINEER
12/07/2015
Date Signed & Sealed

AT&T SITE NO:
SOH3059

AT&T SITE NAME:
DUBLIN-LTE 4C

5590 SHIER RINGS ROAD
DUBLIN, OH 43016

SHEET NAME:

ANTENNA DIAGRAM (BETA)

SHEET NO. / REV.
RF-2/0

SCALE: AS NOTED
DRAWN BY: TSC
CHECKED BY: MAD
DATE: 12/07/15
FILE: [illegible]

Diagram Name: LTE4C_72-43-03
AT&T Site Name: OH3059
Location Name: DUBLIN
Market: SOUTHERN OH
Market Cluster: OHIO/WESTERN PENNSYLVANIA
Comments:

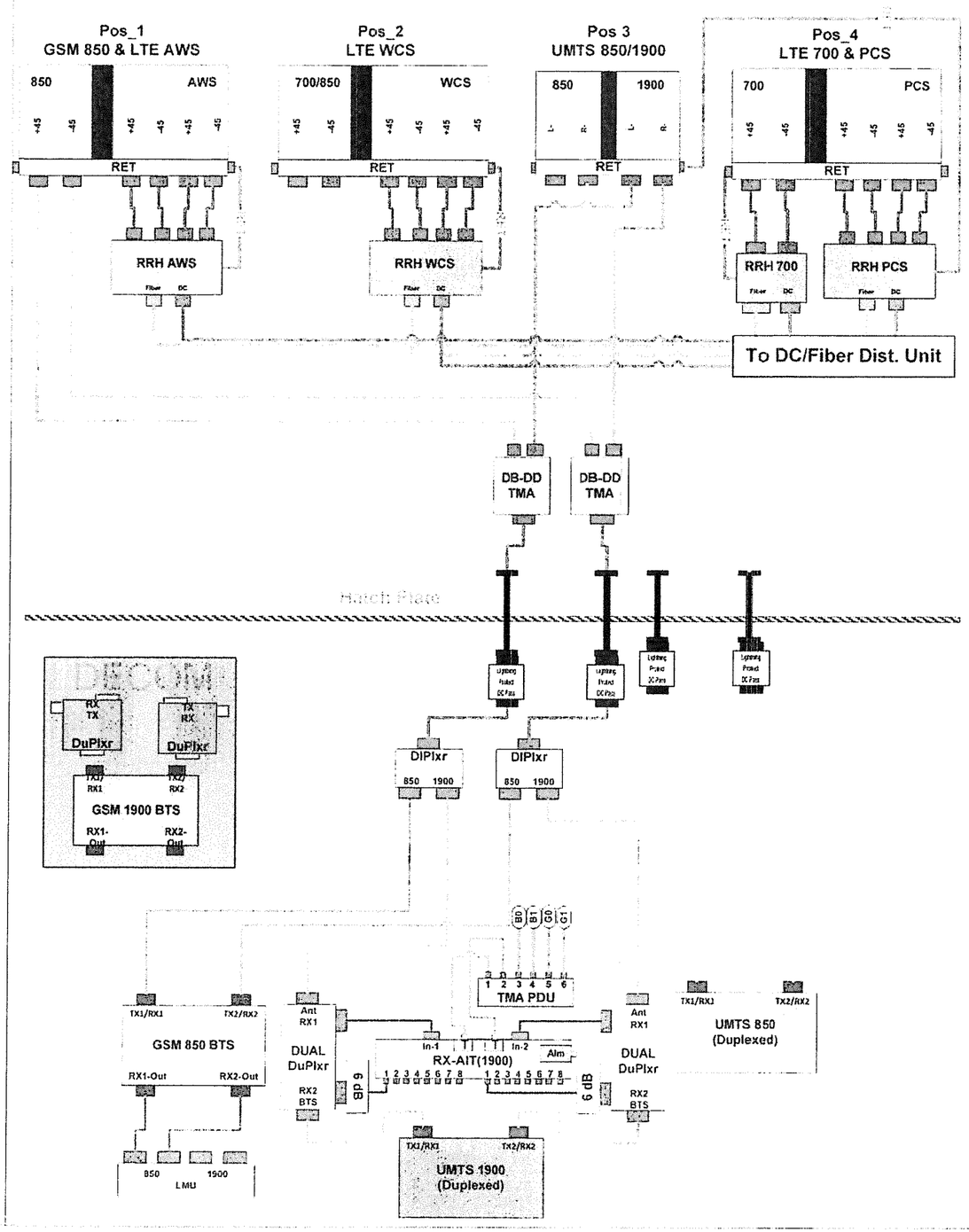

at&t
2630 LIBERTY AVENUE
PITTSBURGH, PA 15222

AMERICAN TOWER CORPORATION

HARPER ENGINEERING, INC.
TELECOM GROUP
815 Superior Ave. Suite 1514
Cleveland, OH. 44114
Phone. (216) 344-3855
Fax. (216) 344-3856

DRAWING REVISIONS

Rev.	Description:	Date:	Mgr.
0	For Construction	12/07/15	MAD

STATE OF OHIO
THOMAS L. FERGUSON
PE 79274
REGISTERED PROFESSIONAL ENGINEER
12/07/2015

AT&T SITE NO:
SOH3059

AT&T SITE NAME:
DUBLIN-LTE 4C

5590 SHIER RINGS ROAD
DUBLIN, OH 43016

SHEET NAME:

ANTENNA DIAGRAM (GAMMA)

SHEET No. Rev.
RF-3/0

SCALE: AS NOTED
DRAWN BY: TSP
CHECKED BY: MAD
DATE: 12/07/15
FILE: 14-106-265

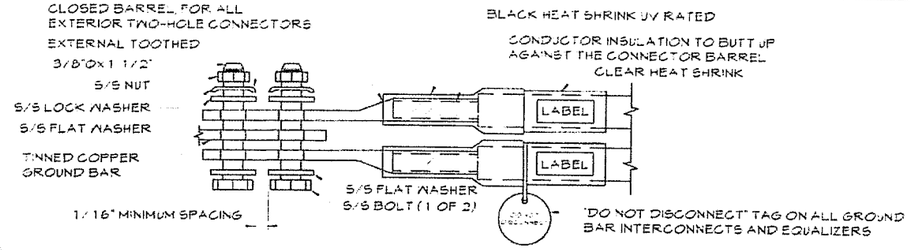

NOTES.

1. EXOTHERMIC WELD (2) TWO, #2 AWG BARE TINNED SOLID COPPER CONDUCTORS TO GROUND BAR, ROUTE CONDUCTORS TO BURIED GROUND RING AND PROVIDE PARALLEL EXOTHERMIC WELD.
2. ALL GROUND BARS SHALL BE STAMPED IN TO THE METAL "IF STOLEN DO NOT RECYCLE" THE CONTRACTOR SHALL USE PERMANENT MARKER TO DRAW THE LINES BETWEEN EACH SECTION AND LABEL EACH SECTION ("P", "A", "I") WITH 1" HIGH LETTERS.
3. ALL HARDWARE SHALL BE STAINLESS STEEL 3/8" DIAMETER OR LARGER. ALL HARDWARE 18-8 STAINLESS STEEL INCLUDING LOCK WASHERS. COAT ALL SURFACES WITH AN ANTI-OXIDANT COMPOUND BEFORE MATING.
4. FOR GROUND BOND TO STEEL ONLY INSERT A CADMIUM FLAT WASHER BETWEEN LUG AND STEEL. COAT ALL SURFACES WITH AN ANTI-OXIDANT COMPOUND BEFORE MATING.
5. DO NOT INSTALL CABLE GROUND KIT AT A BEND AND ALWAYS DIRECT GROUND CONDUCTOR DOWN TO GROUND BUS.
6. NUT & WASHER SHALL BE PLACED ON THE FRONT SIDE OF THE GROUND BAR AND BOLTED ON THE BACK SIDE. INSTALL BLACK HEAT-SHRINKING TUBE, 600 VOLT INSULATION, ON ALL GROUND TERMINATIONS. THE INTENT IS TO WEATHERPROOF THE COMPRESSION CONNECTION.
7. SUPPLIED AND INSTALLED BY CONTRACTOR.
8. THE CONTRACTOR SHALL BE RESPONSIBLE FOR INSTALLING ADDITIONAL GROUND BAR AS REQUIRED, PROVIDING 50% SPARE CONNECTION POINTS.
9. ENSURE THE WIRE INSULATION TERMINATION IS WITHIN 1/8" OF THE BARREL (NO SHINERS).
10. BOLTS SHALL BE MADE "SNUG-TIGHT" PLUS 1/4 TURN.

1 | EXTERIOR TWO HOLE LUG DETAIL

SCALE: N.T.S.

NEWTON INSTRUMENT COMPANY, INC
BUTNER, N.C.

NO	REQUIRED	PART NUMBER	DESCRIPTION
1	1	1/4"x4"x30"	SOLID GROUND BAR
2	2	A-6056	WALL MOUNTING BRACKET
3	2	3061-4	INSULATORS
4	4	3012-1	5/8"-11x1" HHCS.
5	4	3015-8	5/8" LOCKWASHER

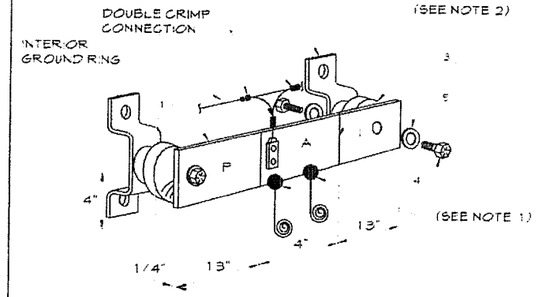

2 | (MGB) REFERENCE GROUNDING BAR DETAIL

SCALE: N.T.S.

EACH GROUND CONDUCTOR TERMINATING ON ANY GROUND BAR SHALL HAVE AN IDENTIFICATION TAG ATTACHED AT EACH END THAT WILL IDENTIFY ITS ORIGIN AND DESTINATION

SECTION "P" - SURGE PROTECTORS

(EC) CELL REFERENCE GROUND BAR (IF COLLOCATED)
(EC) GENERATOR FRAMEWORK (IF AVAILABLE) (#2 AWG)
(EC) TELCO GROUND BAR (#2 AWG)
(EC) COMMERCIAL POWER COMMON NEUTRAL/GROUND BOND (3/0)
(EC) FIBER GROUND BAR (#2 AWG)
(EC) POWER ROOM REFERENCE GROUND BAR (#2 AWG)
(AT&T) RECTIFIER FRAMES

SECTION "A" - SURGE ABSORBERS

(EC) INTERIOR GROUND RING (#2 AWG)
(EC) EXTERNAL EARTH GROUND FIELD (BURIED GROUND RING) (#2 AWG)
(EC) METALLIC COLD WATER PIPE (IF AVAILABLE) (1/0 AWG)
(EC) BUILDING STEEL (IF AVAILABLE) (1/0 AWG)

SECTION "I" - ISOLATED GROUND ZONE

(AT&T) ALL ISOLATED GROUND REFERENCE
(AT&T) GROUND WINDOW BAR

DETAIL NOTES:

1. EXOTHERMICALLY WELD #2 AWG BARE TINNED SOLID COPPER CONDUCTOR TO GROUND BAR. ROUTE CONDUCTOR TO BURIED GROUND RING AND PROVIDE PARALLEL EXOTHERMIC WELD
2. THE CONTRACTOR SHALL USE PERMANENT MARKER TO DRAW THE LIKE BETWEEN SECTION AND LABEL EACH SECTION ("P", "A", "I") WITH 1" HIGH LETTERS.

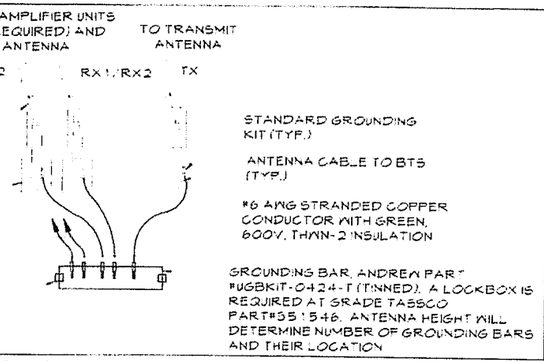

3 | ANTENNA GROUNDING BAR DETAIL

SCALE: N.T.S.

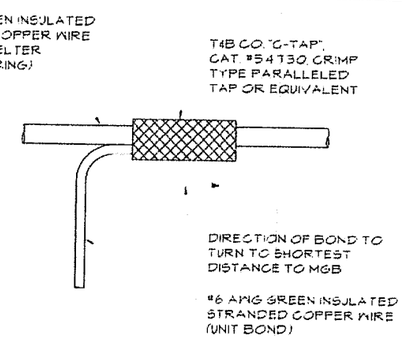

5 | GROUNDING WIRE CONNECTION DETAIL

SCALE: N.T.S.

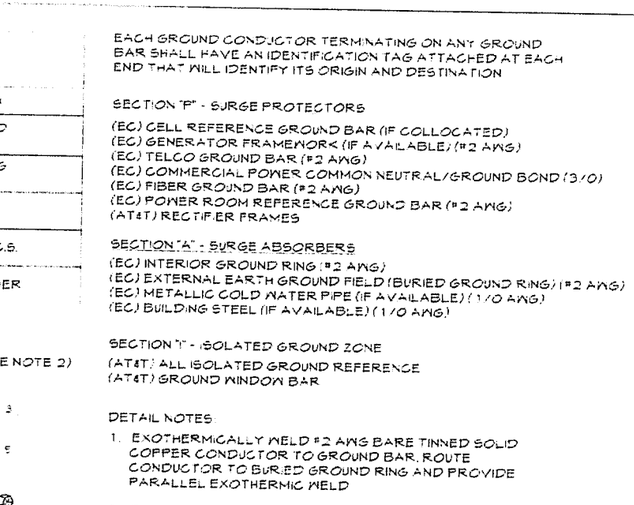

7 | LTE GPS ANTENNA GROUNDING DETAIL

SCALE: N.T.S.

STRANDED CU WIRE WITH
GREEN 600V, THHN/THWN
INSULATION, SIZE AS SPECIFIED

NOTE:
COAT ALL SURFACES WITH AN
ANTI-OXIDANT COMPOUND BEFORE MATING.

GROUND LEADS TO EACH
SECTOR GROUND BAR

GROUND BAR ON
WALL, FLOOR OR ON
ANTENNA TOWER

COAX CABLE
GROUND LEADS

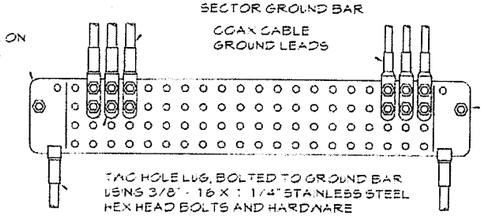

EXISTING GROUND
BAR AND
CONNECTIONS

TWO HOLE LUG, BOLTED TO GROUND BAR
USING 3/8" - 16 X 1 1/4" STAINLESS STEEL
HEX HEAD BOLTS AND HARDWARE

CONTRACTOR SHALL REMOVE "HOME RUN" GROUND WIRES (IF EXISTING), ANY ASSOCIATED GROUND BARS THAT ARE INSULATED, REMOVE INSULATORS AND ATTACH EXISTING GROUND BAR DIRECTLY TO TOWER (BONDING INSULATED GROUND BAR TO TOWER WITH BONDING JUMPER IS UNACCEPTABLE)

4 | TOWER GROUND BAR CONNECTIONS

SCALE: N.T.S.

6 | NOT USED

SCALE: N.T.S.

at&t
2630 LIBERTY AVENUE
PITTSBURGH, PA 15222

AMERICAN TOWER CORPORATION

HARPER ENGINEERING, INC.
TELECOM GROUP
915 Superior Ave Suite 1514
Cleveland, OH, 44114
Phone: (216) 344-3855
Fax: (216) 344-3856

DRAWING REVISIONS

Rev.	Description	Date	Mgr.
0	For Construction	12/07/15	MAD

STATE OF OHIO
THOMAS L. FERGUSON
PE 79274
REGISTERED PROFESSIONAL ENGINEER
12/7/2015
Signature & Date

AT&T SITE NO:
SOH3059

AT&T SITE NAME:
DUBLIN-LTE 4C

5580 SHIER RINGS ROAD
DUBLIN, OH 43016

SHEET NAME:

GROUNDING DETAILS

SHEET NO./Rev.
E-2/0

SCALE: N.T.S.
DRAWN BY: TEG
CHECKED BY: MAD
DATE: 12-02-15
FILE: 14-156-205