14-013.0-CIP

City of Dublin

BID SUBMITTAL AND CONTRACT DOCUMENTS FOR THE

CITY OF DUBLIN

CHURCHMAN ROAD - PHASE 2

TABLE OF CONTENTS

I. BIDDING REQUIREMENTS 1

A. INVITATION FOR BIDS 2
B. INSTRUCTIONS TO BIDDERS 3
C. REQUEST FOR INFORMATION (PRE-BID) 17
D. BID COVERSHEET 18
E. PREVAILING WAGE RATES DISK 20

II. BIDDING FORMS 21

A. PROPOSAL 22
B. BID SCHEDULE ..... 27-1 to 27-7
C. COMBINED BID/PERFORMANCE/PAYMENT BOND 28
D. ALTERNATE BID SECURITY FORM 31
F. AFFIDAVIT OF AUTHORITY 32
G. COMBINED DELINQUENT PERSONAL PROPERTY TAX & NONCOLLUSION AFFIDAVIT 33
H. W-9 FORM 34
I. LIST OF SUBCONTRACTORS 35
J. CONTRACTOR QUALIFICATION STATEMENT 37

III. ADDITIONAL CONTRACT DOCUMENTS 53

A. CITY/CONTRACTOR AGREEMENT 54
B. CITY OF DUBLIN GENERAL CONDITIONS DIVISION 100 64
C. SUPPLEMENTAL GENERAL CONDITIONS 65
D. PROPOSAL NOTES 66
E. GEOTECHNICAL SPECIFICATIONS 67
F. STANDARD DRAWINGS 68
G. SCOPE OF WORK 69

IV. OWNER COMPLETED FORMS 70

A. OWNER EXECUTION CHECKLIST 71
B. NOTICE OF AWARD TO BIDDER 72
C. NOTICE OF AWARD TO SURETY AND SURETY'S AGENT 73
D. NOTICE TO PROCEED 74
E. NOTICE OF COMMENCEMENT OF PUBLIC IMPROVEMENT (O.R.C. §1311.252) 75
F. PREVAILING WAGE BID TABULATION SHEET 76

V. ADDITIONAL PROJECT FORMS 77

A. PAYROLL INFORMATION 78
B. FINAL AFFIDAVIT OF COMPLIANCE WITH PREVAILING WAGES 80
C. CONTRACTOR'S LIEN WAIVER AND RELEASE AGREEMENT 81

VI. PLANS/DRAWINGS 82

I. BIDDING REQUIREMENTS

A. INVITATION FOR BIDS

The CITY OF DUBLIN, Ohio will receive sealed bids for the materials and labor necessary for the construction of the CHURCHMAN ROAD - PHASE 2. Bids shall be received by CITY OF DUBLIN at 5800 Shier-Rings Road, Dublin, Ohio 43016 until 11:00 A.M. local time on April 7, 2016, at which time all bids will be opened and read aloud.

The CITY OF DUBLIN may choose to not award the bid—and bidders shall hold bids open—until sixty days after the bid opening. The work for which bids are invited consists of: Construction of a single lane modern roundabout and approximately 1,900 feet of 3-lane boulevard roadway; concrete walk and curb-and-gutter; 8-ft wide asphalt shared-use path; water main; storm sewer; street lighting; earthwork; clearing and grubbing, soil stabilization; and restoration. The cost estimate for the Project is $ 2,200,000.00.

The contract Documents are available online at no charge. Copies of the Contract Documents are on file at 6555 Shier-Rings Road, Dublin, Ohio 43016, where they are available for inspection by prospective bidders. Paper copies of the Contract Documents are not available for purchase.

Each bidder is required to furnish with its proposal a Bid Guaranty in accordance with Section 153.54 of the Ohio Revised Code. Bid security furnished in Bond form shall be issued by a surety company or corporation licensed in the State of Ohio to provide said surety.

Each proposal must contain the full name of the party or parties submitting the proposal and all persons interested therein. Each bidder must submit evidence of its experience on projects of similar size and complexity. The owner intends and requires that this project be completed by September 30, 2016.

All contractors and subcontractors involved with the project will to the extent practicable use Ohio products, materials, services and labor in the implementation of their project. Payment of Prevailing Wages is required for this Project.

The CITY OF DUBLIN reserves the right to accept or reject any or all bids, to waive any informalities or irregularities in the bidding process and to enter into a contract with the bidder whom, in its opinion, offers the lowest and best bid.

Each bidder must ensure that all employees and applicants for employment are not discriminated against based on race, color, religion, sex, or national origin.

By order of the Council of the CITY OF DUBLIN, OHIO. Ordinance number N/A.

Publish dates: March 24, 2016
March 31, 2016

B. INSTRUCTIONS TO BIDDERS

1. PRELIMINARY MATTERS

   a. The Project owner is the CITY OF DUBLIN, OHIO. The Owner's Representative is Paul A. Hammersmith P.E., Director of Engineering / City Engineer. You may direct questions or request for additional information to **Mike Sweder, P.E. at Telephone: 614-410-4621; Email: msweder@dublin.oh.us.**

   b. In connection with the Legal Notice, the CITY OF DUBLIN (hereinafter called the "City"), issues this Request for Bids for all labor, material, and services necessary for constructing the CHURCHMAN ROAD - PHASE 2(the "Project"), as more fully described in the Contract Documents.

   c. Definitions. The word uses here shall have the following meanings:

      i. "City" or "Owner" shall mean the CITY OF DUBLIN, OHIO.

      ii. "Bidder" or "Contractor" shall all mean an entity or person that submits a bid for the Project and ultimately the entity or person awarded the contract as applicable.

      iii. "Contract Documents" shall mean the documents included with this bid solicitation and listed as Contract Documents in the City/Contractor Agreement.

      iv. "O.R.C." shall mean the OHIO REVISED CODE.

   d. The Project consists of the following contract(s) for the work on the Project:

      i. General Contract

   e. Estimate of Cost [O.R.C. 153.12(A)].

      i. The total estimated construction cost for the base bid Work for the Project for which the City is soliciting bids at this time is $ 2,200,000.00.

2. CONTRACTOR QUALIFICATIONS, REGISTERED CONTRACTORS, INCOME TAX, PERMITTING

   a. A Bidder may be a person, private entity, or any combination of such entities supported by a letter of intent to enter into an agreement or under an existing agreement in association in the form of a joint venture or other consortium. In the case of a joint venture or other consortium:

      i. All members shall be jointly and severally liable for the execution of the Contract, and

      ii. The association shall nominate a representative who shall have the authority to conduct all business for and on behalf of any and all the members of the joint venture or the consortium during the bidding process and, in the event the joint venture or consortium is awarded the Contract, during Contract execution.

   b. Threshold Qualifications. Every Contractor, before entering a contract with the City, must demonstrate the following:

i. Registered Contractors. Any person or company (including subcontractors) intending to do work under these Contract Documents shall be required to meet the CITY OF DUBLIN laws for Contractor Registration, if any, contained in the Codified Ordinances of the CITY OF DUBLIN as applicable to the particular classification of work to be performed.

ii. Licensed Contractors. Bidders and subcontractors for work requiring licenses under the O.R.C. shall submit evidence of such licensing in accordance with O.R.C. Chapter 4740.

iii. Foreign Corporations. Business entities formed outside of the state of Ohio shall present proof of registry with the Ohio Secretary of State and demonstrate the existence of an Ohio statutory agent.

c. Income Taxes. All persons or entities performing work under these Contract Documents shall comply with the requirements set forth in the Codified Ordinances of the CITY OF DUBLIN.

d. Permits and Regulations - Unless otherwise previously or subsequently specified, the Contractor shall procure and pay for all permits, licenses, inspections and approvals necessary for the execution of his contract. The City will obtain the required building permit for permanent structure.

i. The Contractor shall comply with all laws, ordinances, rules, orders and regulations relating to the performance of the work required to complete the Project.

ii. The Contractor's attention is directed to the "Safety and Health Regulations for Construction" of the Occupational Safety and Health Administration, U.S. Department of Labor and to its responsibilities thereunder.

3. GENERAL INSTRUCTIONS

a. City expects the Bidder to examine all instructions, forms, terms, and specifications in the Request for Bids. Each Bidder is solely responsible for conducting its own due diligence and investigation in support of the preparation of Bids, negotiation of agreements, and the subsequent delivery of all services it will provide. Bidder’s failure to furnish all information or documentation required by the Bidding Documents may result in the City rejecting the Bid.

b. Public Information. The City considers all information, documentation and other materials requested to be submitted in response to this solicitation to be a non-confidential and/or non-proprietary nature and therefore subject to public disclosure under the Ohio Public Records Laws except as specifically exempted by those laws. [O.R.C. Chapter 149].

c. Bidder should carefully read the information contained herein. It is the Bidder’s responsibility to submit a complete response to all requirements and questions. Any information submitted by Bidders shall become the property of the City and submitted at the Bidder’s sole expense. The City shall not pay any stipend for any submissions related

to the bidding process. The City will not provide compensation to Bidders for any expenses incurred for Bid preparation or for any presentations made.

d. The City may disqualify bids that are qualified with conditional clauses, or alterations, or items not called for in the bid documents, or irregularities and deviations from the requirements of the Contract Documents.

e. The City makes no guarantee that an award will be made because of this bid, and reserves the right to accept or reject any or all bids, waive any formalities or minor technical inconsistencies, or delete any item/requirements from this bid or resulting contract when deemed to be in the City's best interest.

4. INTERPRETATION

a. If a Bidder contemplating submitting a Bid for the proposed Project is in doubt as to the true meaning of any part of the Contract Documents, **it may submit a written request for an interpretation thereof to Mike Sweder, P.E., in writing on the form included with the Contract Documents. Inquiries shall be faxed to 614-410-4699 or e-mailed to msweder@dublin.oh.us to the attention of Mike Sweder, P.E.**. The City will make any interpretation of the proposed documents by Addendum only, duly signed by the City, and a copy of such Addendum will be mailed or delivered to each Bidder receiving a set of Contract Documents and each plan room where the City maintains the Contract Documents. The City will not be responsible for any other explanation or interpretation of the proposed documents.

b. In interpreting the Contract Documents, the Bidder shall interpret words describing materials that have a well-known technical or trade meaning, unless otherwise specifically defined in the Contract Documents, in accordance with the well-known meaning recognized by the trade.

5. DOCUMENTS TO SUBMIT WITH BID

a. The Bidder shall submit the following completed forms with its response to this Request for Bids:

i. Bid Form

ii. Bid Guaranty and Contract Bond

iii. Affidavit of Authority (if applicable)

iv. Personal Property Tax Affidavit

v. Bidder's Qualification Statement

vi. Insurance Certificate

vii. Noncollusion affidavit

viii. State of Ohio Bureau of Workers' Compensation Certificate

ix. Proposed Supervisory Personnel List

x. Proposed Subcontractor List

xi. Bidder's and Subcontractors' Certificate(s) of licensure, if applicable

b. In addition to the foregoing requirements, Bids submitted by a joint venture or other consortium shall include a copy of the joint venture/consortium agreement entered into by all members. Alternatively, a binding letter of intent or similar irrevocable instrument to execute a joint venture/consortium agreement in the event of a successful Bid shall be signed by all members and submitted with the Bid, together with a copy of the proposed joint venture/consortium agreement.

c. Each Bidder shall submit the following number of copies of its Bid to the City: 1 copy printed one sided and one additional copy in electronic PDF form. The PDF form must exactly match the hard copy and must be provided within 24 hours after the Bid opening. The Bid Form shall be signed with the name typed or printed below the signature. A Bid shall not be submitted by facsimile transmission. A Bidder shall sign its Bid in the form required under Ohio law to bind the Bidder's particular type of business entity to a contract.

d. Each Bid shall be enclosed and delivered in a sealed opaque envelope with the Bidder's name and the title of the Project printed in the upper left hand corner and addressed as follows: **ATTN: Paul A. Hammersmith P.E., Director of Engineering / City Engineer, 5800 Shier-Rings Road, Dublin, Ohio 43016.** The Bidder shall be responsible for delivering its Bid to this office and address for the Bid opening before the deadline set forth in the Legal Notice—as extended by any addenda. The City will not open Bids that arrive after the deadline regardless of how the Bidder delivers the Bid.

e. After the City opens the Bids, it may require the Bidders to make available additional financial information, including, but not limited to, financial statements from the previous three years for review of the City. Such financial statements shall be audited financial statements to the extent available or, if not available, at least be reviewed financial statements. At the City's discretion, it may obtain a copy of such financial information. To the extent the City maintains copies of such documents, the City shall keep additional financial information it receives pursuant to a request under this paragraph confidential to the extent possible, except under proper order of a court. The additional financial information should not be a public record under section 149.43 of the Revised Code. (*See* O.R.C. 9.312).

6. CLARIFICATION OF BIDS

a. To assist in the examination, evaluation, and comparison of the Bids and the qualifications of the Bidders, the City may ask any Bidder for a clarification of its Bid. Any clarification submitted by a Bidder that is not in response to a request by the City shall not be considered. The City's request for clarification and the response shall be in writing. No change in the prices or substance of the Bid shall be sought, offered, or permitted, except to confirm the correction of arithmetic errors discovered by the City in the evaluation of the Bids.

7. BONDS

   a. Each bidder shall submit one of the statutorily required forms of bid security as set forth in O.R.C. Section 153.54 on the form included with the Contract Documents. There are two ways to meet these requirements:

      i. OPTION #1: Submit the Combined Bid/Performance/Payment Bond on the form included with the Contract Documents along with the Bid; or,

      ii. OPTION #2: Submit a certified check, cashier's check, or letter of credit pursuant to Chapter 1305 of the Revised Code, conditioned to provide that if the bid is accepted, the bidder, after the awarding or the recommendation for the award of the contract, whichever the contracting authority designates, will enter into a proper contract in accordance with the bid, plans, details, specifications, and bills of material. Any letter of credit shall be revocable only at the option of the City. The amount of the certified check, cashier's check, or letter of credit shall be equal to ten per cent of the bid. Any of the foregoing instruments shall be submitted with the CITY OF DUBLIN listed as the payee or beneficiary. If the Bidder chooses option ii and is awarded the Contract, the Bidder shall then submit a Bond using the form included with the Contract Documents.

   b. With any Bond required here, the Bidder shall submit or ensure:

      i. *Ohio Department of Insurance Certificate*. Proof that the bond is issued by a surety company ("Surety") authorized by the Ohio Department of Insurance to transact business in the State of Ohio and acceptable to the City in the form of a certificate.

      ii. *A Financial Statement*. Proof that the bond is issued by a Surety capable of demonstrating a record of competent underwriting, efficient management, adequate reserves, and sound investments. These criteria will be deemed to be met if the Surety currently has an A.M. Best Company Policyholders rating of "A-" better and has or exceeds the Best Financial Size Category of Class VI. Other Sureties may be acceptable to the City, in its sole discretion.

      iii. *Proper signatures, credentials, and Power of Attorney*. The bond shall be signed by an authorized agent of an acceptable Surety and by the Bidder; and, include credentials showing the Power of Attorney of the agent.

      iv. The name, address, and telephone and fax numbers of the Surety and the Surety's Agent should be typed or printed on each bond.

8. EXECUTION OF CONTRACT

   a. Within 10 days after award of the Contract, the successful Bidder shall execute and deliver to the City an original of the City/Contractor Agreement, based upon the City's form. Such contract shall include the terms required by Ohio law and documents required by the Instructions to Bidders and Contract Documents for the Project. The successful Bidder shall have no property interest or rights under the City/Contractor Agreement until the Agreement is properly executed by the City.

9. STATE SALES AND USE TAXES

   a. The City is a political subdivision of the State of Ohio and is exempt from taxation under the Ohio Sales Tax and Use Tax Laws. Building materials that the successful Bidder purchases for incorporation into the Project will be exempt from state sales and use taxes if the successful Bidder provides a properly completed Ohio Department of Taxation Demolition Contract Exemption Certificate to the vendors or suppliers when acquiring the materials. The City will execute properly completed certificates on request.

10. COMPLETION DATE

   a. Completion Date. Each successful Bidder shall have its Work on the Project Complete as follows: October 30, 2016**.** The Contract Time shall run from the date of the Notice to Proceed or if there is no Notice to Proceed from the Effective Date of the City/Contractor Agreement.

11. MODIFICATION/WITHDRAWAL OF BIDS

   a. Modification. A Bidder may modify its Bid by written communication to the City addressed to the City's Representative at any time before the scheduled closing time for receipt of Bids, provided such written communication is received by City's Representative before the Bid deadline. The written communication shall not reveal the Bid price, but should provide the addition or subtraction or other modification so that the final prices or terms will not be known to the City until the sealed Bid is opened. If the Bidder's written instructions with the change in Bid reveal the Bid amount in any way before the Bid opening, the Bid may be rejected as non-responsive.

   b. Withdrawal. Bids may be withdrawn with permission of the City or in strict accordance with O.R.C. Section 9.31 which generally commands that Bidders may withdraw their bids from consideration if the price of the bid was substantially lower than the other bids, providing the bid was submitted in good faith, and the reason for the price bid being substantially lower was a clerical mistake as opposed to a judgment mistake, and was actually due to an unintentional and substantial arithmetic error or an unintentional omission of a substantial quantity of work, labor, or material made directly in the compilation of the bid. Notice of a claim of right to withdraw such bid must be made in writing filed with the City within two business days after the conclusion of the bid opening procedure.

12. PREVAILING WAGES

   a. This Project is horizontal construction with an estimated cost of $ 2,200,000.00, and the **Bidder is required to comply with all applicable Ohio Prevailing Wage requirements and labor laws for this Project.**

   b. If Prevailing Wage applies to this Project, the determination of the prevailing rates of wages of mechanics and laborers in accordance with section 4115.05 of the Revised Code for the class of work called for by the Project, in the locality where the work is to be performed, shall be attached to and made part of the Contract Documents.

c. If Prevailing Wage applies to this Project, the Contractor must pay at least the wage rates subsequently listed in the Wage determinations. The Contractor must submit properly executed copies of the Contractor's and subcontractor's payrolls to the City's Prevailing Wage Coordinator in accordance with the requirements of Section 4115.071 of the O.R.C.. Payroll records shall be kept current as failure to do so will delay the Owner's approval for payment of any pending estimates.

13. ALTERNATES

a. The City may request bids on alternates. If the City requests bids on alternates, the Bidder should include the cost of the alternates requested on its Bid Form.

b. At the time of awarding the contract, the City will select or reject alternates as it determines is in its best interest. A Bidder's failure to include in its Bid Form the cost of an alternate selected by the City and applicable to the Bidder's work may render the bid non-responsive and be grounds for the rejection of the bid. Otherwise, the failure to include the cost of an alternate will not be deemed material.

c. The Bidder acknowledges that although there is an estimate for the cost of the Project, the market conditions may and frequently do result in the estimate being different from the sum of the bids received, either higher or lower. The Bidder understands that the City may include alternates, which may include deduct alternates as well as add alternates, to give it flexibility to build the Project with the funds available. The Bidder further understands and acknowledges that use of add and deduct alternates is a long held customary practice in the construction industry in the State of Ohio. The Bidder also acknowledges that the City will not make a decision about the alternates on which to base the award of contracts until the bids are received, and the City can compare its available funds with the base bids and the cost or savings from selecting different alternates. The Bidder understands that the award to the Bidder submitting the lowest and best bid will be based on the lowest and best base bid plus selected alternates, and may result in an award to a Bidder other than the Bidder that submitted the lowest base bid. The bidder also acknowledges that its, and other bidders', bids may become responsive or non-responsive based on whether the bidders bid and are qualified for all base work and alternates; and, the City's selection of alternates. The City will evaluate bids to determine the lowest and best bid after it selects the alternates.

d. If, during the progress of the Work, the City desires to reinstate any alternate not included in the Contract, the City reserves the right to reinstate the alternate at the price bid by the Contractor if such action is taken in sufficient time so as not to delay the progress of the work or cause the Contractor additional expense.

14. UNIT PRICES

a. Where unit prices are requested in the Bid Form, the Bidder should quote a unit price. Unless otherwise expressly provided in the Bid Documents, such unit prices shall include all labor, materials, and services necessary for the timely and proper installation of the item for which the unit prices are requested. The unit prices quoted in the bid shall be the basis for any Change Orders entered into under the City/Contractor Agreement,

unless the Design Professional determines that the use of such unit prices will cause substantial inequity to either the Contractor or the City.

b. The estimated quantities shown herein are approximate only and the City assumes no responsibility for the accuracy of the estimates. Bidders are cautioned to make their own investigations and determinations of the conditions under which the work will be performed and to base their bids accordingly.

15. ADDENDA

a. The City reserves the right to issue Addenda changing, altering, or supplementing the Contract Documents before the time set for receiving bids. The City will issue the Addenda to clarify bidders' questions and/or to change, alter, or supplement the Contract Documents.

b. Any explanation, interpretation, correction, or modification of the Contract Documents will be issued in writing in the form of an Addendum, which shall be the only means considered binding. Any explanations, interpretations, or other representations made by any other means shall not be legally binding. All Addenda shall become a part of the Contract Documents.

c. Bidders shall submit written questions to the City in sufficient time in advance of the bid opening to allow sufficient time for the City to respond. All Addenda will be issued, except as hereafter provided, and mailed or otherwise furnished to persons who have obtained Contract Documents for the Project, before the published time for the opening of bids.

d. Copies of each Addendum will be sent only to the Bidders to whom Contract Documents have been issued and to Plan Rooms where copies of the Contract Documents are maintained. Receipt of Addenda shall be indicated by Bidders in the space provided on the Bid Form. Bidders are responsible for acquiring issued Addenda in time to incorporate them into their bid. Bidders should contact the City before the bid opening to verify the number of Addenda issued.

e. Each Bidder shall carefully read and review the Contract Documents and immediately bring to the attention of the City any error, omission, inconsistency, or ambiguity therein.

f. If a Bidder fails to indicate receipt of all Addenda through the last Addendum issued by the Design Professional on its Bid Form, the bid of such Bidder will be deemed to be responsive only if:

    i. The bid received clearly indicates that the Bidder received the Addendum, such as where the Addendum added another item to be bid upon and the Bidder submitted a bid on that item; or

    ii. The Addendum involves only a matter of form or is one that has either no effect or has merely a trivial or negligible effect on price, quantity, quality, or delivery of the item bid upon.

16. PREFERENCE FOR PUBLIC IMPROVEMENT CONTRACTS (As Selected)

a. [X] With respect to the award of this Contract, the City shall give preference to a contractor having its principal place of business in Ohio over a contractor having its

principal place of business in a state that provides a preference in favor of contractors of that state for the same type of work. Where a preference is provided by another state for contractors of that state, a contractor having its principal place of business in Ohio is to be granted by the City the same preference over them in the same manner and on the same basis and to the same extent as the preference is granted in letting contracts for the same type of work by the other state. If one party to a joint venture is a contractor having its principal place of business in Ohio, the joint venture shall be considered as having its principal place of business in Ohio.

b. [ ] With respect to the award of this Contract, the City shall not give preference to a contractor having its principal place of business in Ohio over other contractors.

17. METHOD OF AWARD

a. In evaluating Bids, the City may conduct such investigations as are deemed necessary to establish the qualifications and financial ability of the Bidder and its subcontractors and suppliers. The Bidder authorizes the City and its representatives to contact the owners, design professionals, and others having knowledge (collectively "Contacts") on projects on which the Bidder has worked and authorizes and requests such Contacts to provide the City with a candid evaluation of the Bidder's performance. By submitting its Bid, the Bidder agrees that if it or any person, directly or indirectly, on its behalf or for its benefit brings an action against any of such Contacts or the employees of any of them as a result of or related to such candid evaluation, the Bidder will indemnify and hold such Contacts and the employees of any of them from any claims whether or not proven that are part of or are related to such action and from all legal fees and expenses incurred by any of them arising out of or related to such legal action. This obligation is expressly intended for the benefit of such Contacts and the employees of each of them.

b. All Bids shall remain open for acceptance for 60 days following the day of the Bid opening, but the City may, in its sole discretion, release any Bid and return the Bid Guaranty before that date.

c. The City reserves the right to reject any, part of any, or all Bids and to waive any informalities and irregularities. The Bidder expressly acknowledges this right of the City to reject any or all Bids or to reject any incomplete or irregular Bid. The City will award a single contract for each of the Bid packages listed above, unless it determines to reject one or more Bid packages. Bidders must furnish all information requested. Failure to do so may result in disqualification of the Bid.

d. Determination of the Bidder Submitting the Lowest and Best Bid. Subject to the right of the City to reject any or all Bids, the City will award the Contract for the Work to the Bidder submitting the lowest and best Bid, taking into consideration accepted alternates.

    i. Buy Ohio/American and Ohio Contractor Bid Preference. If selected above, the City shall apply a domestic Ohio bid preference as outlined below.

        1. Bids will first be evaluated to determine that a bidder's offering is for a domestic source end product as defined in48 CFR Pt. 25.003. Information furnished by the Bidder in its Bid shall be relied upon in making this determination. Any Bidder's offering that does not offer a domestic

source end product shall be rejected, except where the City determines that certain articles, materials and supplies are not mined, produced, or manufactured in the United States in sufficient and reasonably available commercial quantities and of a satisfactory quality.

a. Following the determination as to domestic source end products, remaining bids and proposals shall be evaluated as set forth below, so as to give preference to Ohio bids or bidders who are located in a border state, provided that the border state imposes no greater restrictions than contained in this rule.

2. Buy Ohio Act compliance

a. Where the preliminary analysis of bids identifies the apparent low bid as an Ohio bid or a bid from a border state, the City shall proceed with its standard contract award practices and procedures as set forth in the Instructions to Bidders.

b. Where the preliminary analysis identifies the apparent low bid as one other than an Ohio bid or bid from a border state, the City shall consider the following factors:

i. Whether the goods or services can be procured in-state in sufficient and reasonably available quantities and of a satisfactory quality;

ii. Whether an Ohio bid has been submitted;

iii. Whether the lowest Ohio bid, if any, offers a price to the City deemed to be an excessive price (defined as a price that exceeds by more than five per cent the lowest non-Ohio bid submitted);

iv. Whether the lowest Ohio bid, if any, offers a disproportionately inferior product or service.

c. Where the City determines that selection of the lowest Ohio bid, if any, will not result in an excessive price or disproportionately inferior product or service, the City shall include that Bidder in its lowest and best analysis.

d. Where the City otherwise determines it is advantageous to propose the award of a contract to other than an Ohio bidder or bidder from a border state, the City shall include that Bidder in its lowest and best analysis.

ii. In addition to the forgoing, City may consider the following criteria in determining the lowest and best bidder; and, in its discretion, may consider and give such weight to these criteria as it deems appropriate:

1. Past Contract Performance

a. Whether Bidder has failed to perform a contract within the last five years from the date of Bid submission based on all information including fully settled disputes or litigation. A fully settled dispute or litigation is one that has been resolved in accordance with the dispute resolution mechanism under the respective contract, and where all appeal instances available to the Bidder have been exhausted.

b. Whether Bidder has failed to sign a contract after submitting a bid security in the past five years.

c. All pending litigation shall in total not represent more than ten percent (10%) of the Bidder's net worth and shall be treated as resolved against the Bidder.

d. Bidder's history of making claims against others or having claims made against it; and, if the Bidder's management operates or has operated another construction company, the work history of that company in determining whether the Bidder submitted the lowest and best Bid.

2. Financial Ability

a. The Bidder's financial ability to complete the Contract successfully and on time without resort to its Surety.

b. The City may request Bidder provide for its review audited financial statements, to the extent available, and if not available, reviewed financial statements including balance sheets, income statements, and cash flow statements, or other financial statements acceptable to the City, for the last three years to demonstrate the current soundness of the Bidder's financial position and its prospective long term profitability.

i. The Bidder's average coefficient of Current ratio (Current Assets/Current Liabilities) compared to 1. The greater, the better.

ii. The Bidder's average coefficient of Debt ratio (Total Debt/Total Assets) compared to 1. The lesser, the better.

3. Experience

a. Whether the Bidder has experience under contracts in the role required by this Contract for at least the last five years before the Bid submission deadline, and with activity in at least nine months each year.

b. Whether the Bidder has participated as in the role required by this Contract in at least two contracts within the last five years, each with a value of at least 85% of the stated estimate for this Project,

that have been successfully and substantially completed and that are similar to the proposed Works. Similarity shall be based on the physical size, complexity, methods, technology or other characteristics as described in the Contract Documents.

c. For the above or other contracts executed during the period stipulated in above, whether the Bidder has experience in the following key activities: ODOT Pre-Qualification for horizonal work consisting of construction of a single lane modern roundabout and approximately 1,900 feet of 3-lane boulevard roadway; concrete walk and curb-and-gutter; 8-ft wide asphalt shared-use path; water main; storm sewer; street lighting; earthwork; clearing and grubbing, soil stabilization; and restoration.

d. Whether the Bidder has a record of consistent customer satisfaction and of consistent completion of projects, including projects that are comparable to or larger and more complex than the Project, on time and in accordance with the applicable Contract Documents.

e. The Bidder's prior experience on other projects with the CITY OF DUBLIN and with other public owners, including the Bidder's demonstrated ability to complete its work on these projects in accordance with the Contract Documents and on time, and will also consider its ability to work with the City as a willing, cooperative, and successful team member.

4. Whether the Bidder possesses or can obtain sufficient equipment and facilities to complete the Project.

5. The adequacy, in numbers and experience, of the Bidder's work force to complete the Contract successfully and on time.

6. The Bidder's compliance with federal, state, and local laws, rules, and regulations, including but not limited to the Occupational Safety and Health Act, Prevailing Wage laws, and Ethics laws.

7. The Bidder's participation in a drug-free workplace program acceptable to the City, and the Bidder's record for both resolved and unresolved findings of the Auditor of State for recovery as defined in Section 9.24 of the O.R.C..

8. The City's prior experience with the Bidder's surety.

9. The Bidder's interest in the Project as evidenced by its attendance at any pre-Bid meetings or conferences for Bidders.

10. Depending upon the type of the work, other essential factors, as the City may determine and as are included in the Specifications.

11. The foregoing information with respect to each of the Subcontractors and Suppliers that the Bidder intends to use on the Project.

e. With its Bid, the Bidder will complete and submit to the City a completed Contractor's Qualification Statement (using the form included in the Contract Documents), and thereafter will provide the City with such additional information as the City may request regarding the Bidder's qualifications.

f. The failure to submit requested information on a timely basis may result in the determination that the Bidder is not the lowest and best Bidder.

g. With its Bid, the Bidder shall submit a list of proposed subcontractors using the form included with the Contract Documents. Subcontract work shall not total more than **50%** of the Contractor's Contact with the City.

h. The City reserves the right to reject proposed Subcontractors before the Contract is awarded. The Bidder shall replace rejected subcontractors with subcontractors acceptable to the City with no change in the amount of the Bid submitted by the Bidder to City. After approval by the City of the list of proposed Subcontractors, Suppliers, and manufacturers submitted by the successful Bidder, the list shall not be changed unless written approval of the change is authorized by the City. The City reserves the right to reject Subcontractors after the Contract is awarded. In that instance, the City shall only be liable to the Contractor for the difference in Contract Price between the rejected subcontractor and the replacement subcontractor. The Contractor's markup on the replacement subcontractor shall be equal to or less than the markup on the rejected subcontractor contract.

i. With its Bid, the Bidder shall submit a list of supervisory personnel with which it intends to staff the Project indicating their respective roles on the Project. The City reserves the right to reject proposed personnel both before and after the Contract is awarded with no additional cost to the City. Once the personnel list is approved by the City, it shall not be changed without the written consent of the City.

j. No Bidder may withdraw its Bid within sixty (60) days after the date Bids are opened. The City reserves the right to waive any formalities or irregularities or to reject any or all Bids.

k. The City reserves the right to disqualify Bids, before or after opening, upon evidence of collusion with intent to defraud or other illegal practices on the part of the Bidder.

l. By submitting its Bid, the Bidder agrees that the City's determination of which Bidder is the lowest and best Bidder shall be final and conclusive, and that if the Bidder or any person on its behalf challenges such determination in any legal proceeding, the Bidder will indemnify and hold the City and its employees and agents harmless from any claims included or related to such legal proceeding, whether or not proven, and from legal fees and expenses incurred by the City, its employees, or agents that arise out of or are related to such challenge.

m. Award of Contract. The award and execution of the Contract, when required, will only be made pursuant to the legal process applicable to the City for awarding contracts of this nature.

END OF INSTRUCTIONS TO BIDDERS

C. REQUEST FOR INFORMATION (PRE-BID)

CITY OF DUBLIN
CHURCHMAN ROAD - PHASE 2

The person, firm, or corporation submitting a request for information shall be responsible for its prompt delivery and do so in a manner that will allow a sufficient period of time for the issuance and delivery of an Addendum before receipt of bids. The CITY OF DUBLIN will not be responsible for any other explanations of the Contract Documents made before the receipt of bids.

Please submit all pre-bid questions in writing by facsimile or electronic mail (Email) to: Mike Sweder, P.E., 614-410-4699 or msweder@dublin.oh.us

Company:	Contact Name:
Email:	Phone:
Requested Information:	

D. BID COVERSHEET

BIDDERS SHALL ATTACH THIS FORM AS THE COVERSHEET TO THE BID. USE THE BOXES BELOW TO CHECK YOUR WORK. COMPLETING THIS FORM DOES NOT GUARANTEE THAT YOUR BID WILL BE RESPONSIVE OR SELECTED; BUT, SHOULD HELP TO OVERCOME THE MOST COMMON BIDDER MISTAKES. THE CITY OF DUBLIN, OHIO RESERVES THE RIGHT TO REJECT ANY AND ALL PROPOSALS AND TO WAIVE ANY INFORMALITIES OR IRREGULARITIES IN THE PROPOSALS.

1. Bidder's Company Name: _____

2. Total Bid (From Bid Form): $_____

BID PACKAGE

- ☐ Reviewed in detail?

PROPOSAL

- ☐ Acknowledged any addenda?
- ☐ Total bid amount completed in words and figures?
- ☐ Signed by a person with authority to bind your company?
- ☐ No changes made to form or conditions added?

BID SCHEDULE

- ☐ Completely filled in?

COMBINED BID/PERFORMANCE/PAYMENT BOND

- ☐ Your company name in the Principal blank?
- ☐ Surety name in the Surety blank?
- ☐ Dollar amount should be blank
- ☐ Signed as indicated?

COMBINED DELINQUENT PERSONAL PROPERTY TAX & NONCOLLUSION AFFIDAVIT

- ☐ Filled in?
- ☐ Signed?
- ☐ Notarized?

AFFIDAVIT OF AUTHORITY

- ☐ Needs completed if you are anything other than a sole proprietor
- ☐ Filled in?
- ☐ Signed?
- ☐ Notarized?

POWER OF ATTORNEY (OUT OF STATE CORPORATION)

- ☐ Must have if you are an out of state corporation

LIST OF SUBCONTRACTORS

- ☐ Completed?

LIST OF SUPERVISORY PERSONNEL

- ☐ Completed?

CONTRACTOR QUALIFICATION STATEMENT

- ☐ Completed?

INSURANCE CERTIFICATE

- ☐ Submitted?

WORKERS COMPENSATION COVERAGE

- ☐ Submitted?

W-9 FORM

- ☐ Submitted?

E. PREVAILING WAGE RATES DISK

II. BIDDING FORMS

A. PROPOSAL

CITY OF DUBLIN

CHURCHMAN ROAD - PHASE 2

_____ (the "Bidder") submits this Proposal having read and examined the contract documents, including but not limited to the Invitation to Bid.

Addenda Number	Date of Receipt
_____	_____
_____	_____
_____	_____

The Bidder proposes to perform all work for the Agreement for Construction in accordance with the contract documents for the following sum:

Total Bid (in figures): $ _____

Total Bid (in words): _____

_____

In the event of a discrepancy between the amount of the total bid as written in figures and in words, the amount written in words shall govern.

Unless otherwise specified in the Bid Document the amount of the total bid is based on the unit prices or lump sum set forth in the Bid Schedule attached hereto and incorporated herein.

The Bidder understands and agrees that all work to be performed under the Agreement for Construction shall be completed by the date or time required by the Contract Documents unless an extension of time is granted by the CITY OF DUBLIN.

Upon failure to have the work completed within the project time, the CITY OF DUBLIN, OHIO shall be entitled to retain or recover from the Bidder, as liquidated damages, and not as a penalty, the amounts set forth in the Contract Documents for each and every calendar day until completion. The right of the CITY OF DUBLIN, OHIO to recover liquidated damages shall not substitute for any recovery for additional costs in the event the Bidder fails to complete the Agreement for Construction according to the Contract Documents.

REPRESENTATIONS OF THE BIDDER

The Bidder represents the following:

1. The Bidder has read and understands the Contract Documents and understands that it must comply with all requirements of the Contract Documents, regardless of whether the Bidder has actual knowledge of the requirements and regardless of any statement or omission made by the Bidder that might indicate a contrary intention.

2. The Bid is based upon the items specified by the Contract Documents.

3. The Bidder has visited the site, become familiar with local conditions, and has correlated personal observations about the requirements of the Contract Documents. The Bidder has no outstanding questions regarding the interpretation of the Contract Documents.

4. Within ten (10) business days from the date of receipt the Notice of Intent to Award, the Bidder understands that it must enter into and execute an agreement for CITY OF DUBLIN, CHURCHMAN ROAD - PHASE 2 if awarded based on this proposal. If the Bidder does not execute an agreement for the Project for any reason, the Bidder and the Bidder's surety shall be liable to the CITY OF DUBLIN, OHIO as provided in O.R.C. Section 153.54.

5. Within ten (10) business days of the date of receipt of the Notice of Intent to Award, the Bidder understands that it must submit the following:

   a. Performance Bond. (If combined bid/performance/payment not submitted already).

   b. Copy of Additional Insured Endorsement.

6. The Bidder understands that it must furnish any other information requested by the CITY OF DUBLIN.

The Bidder hereby signs this Proposal on the ___ day of _____, 2016.

If Bidder is an individual, complete the following:

Signature: _____

Print Name: _____

Name of Business: _____

(if different from above)

Federal Identification Number: _____

Address: _____

_____

Telephone: ( ) _____

Fax: ( ) _____

If Bidder is a partnership, complete the following:

Name of Partnership: _____

By: _____

(Signature)

Print Name: _____

Federal Identification Number: _____

Address: _____

_____

Telephone: ( ) _____

Fax: ( ) _____

Names and Addresses of all general partners:

_____

_____

_____

If Bidder is a joint venture, complete the following:

Name of Joint Venture: _____

By: _____

(Signature)

Print Name: _____

Address: _____

_____

Telephone: ( ) _____

Fax: ( ) _____

Complete the following for each firm represented by the joint venture:

1. Name:_____

Federal Identification Number: _____

Address: _____

_____

Telephone: ( ) _____

Fax: ( ) _____

2. Name: _____

Federal Identification Number: _____

Address: _____

_____

Telephone: ( ) _____

Fax: ( ) _____

If Bidder is a corporation, complete the following:

Name of Corporation: _____

By: _____

(Signature)

Print Name: _____

Title: _____

Federal Identification Number: _____

Address: _____

_____

Telephone: ( ) _____

Fax: ( ) _____

State of Incorporation: _____

Names and addresses of Corporate Officers:

_____

_____

_____

If Bidder is an entity other than those described above, complete the following:

Name of Bidder:

By: _____

(Signature)

Print Name: _____

Title: _____

Federal Identification Number: _____

Address: _____

_____

Telephone: ( ) _____

Fax: ( ) _____

Type of Business Entity: _____

Names and addresses of all Principals:

_____

_____

_____

_____

_____

BID SCHEDULE

BIDDER agrees to perform all work described in the CONTRACT DOCUMENTS for the following unit prices:

Churchman Road - Phase 2

CITY OF DUBLIN

REF NO.	(1) ITEM	(2) DESCRIPTION	(3) QUANT.	(4) UNIT	(5) LABOR ($)	(6) MATERIAL ($)	(7) (5)+(6) TOTAL ($)	(8) (3) x (7) TOTAL EXTENDED INFORMAL PRICE ($)
		ROADWAY						
1	201	CLEARING AND GRUBBING	1	LUMP				
2	201	TREE OR STUMPS REMOVED AND DISPOSED OF, 18" SIZE	12	EACH				
3	201	TREE OR STUMPS REMOVED AND DISPOSED OF, 30" SIZE	10	EACH				
4	201	TREE OR STUMPS REMOVED AND DISPOSED OF, 48" SIZE	4	EACH				
5	202	HEADWALL REMOVED AND DISPOSED OF	1	EACH				
6	202	WALK REMOVED AND DISPOSED OF	3,021	SQ. FT.				
7	202	CURB AND GUTTER REMOVED AND DISPOSED OF	1,131	LIN. FT.				
8	202	PIPE REMOVED AND DISPOSED OF, 24" AND UNDER	185	LIN. FT.				
9	202	PIPE REMOVED AND DISPOSED OF, OVER 24"	32	LIN. FT.				
10	202	CATCH BASIN OR INLET REMOVED AND DISPOSED OF	2	EACH				
11	202	MANHOLE REMOVED AND DISPOSED OF	1	EACH				
12	202	FENCE REMOVED AND DISPOSED OF	140	LIN. FT.				
13	202	STONE WALL REMOVED AND DISPOSED OF	90	LIN. FT.				
14	203	EXCAVATION	6,207	CU. YD.				
15	203	EMBANKMENT	14,575	CU. YD.				
16	204	EXCAVATION OF SUBGRADE	400	CU. YD.				
17	204	GRANULAR EMBANKMENT, W/ 304 AGGREGATE BASE AND GEOTEXTILE FABRIC	400	CU. YD.				
18	204	SUBGRADE COMPACTION	15,783	SQ. YD.				
19	608	4" CONCRETE WALK, AS PER PLAN	6,570	SQ. FT.				
20	608	CURB RAMP, AS PER PLAN	26	EACH				
21	653	3" TOPSOIL FURNISHED AND PLACED, AS PER PLAN	1,238	CU. YD.				
22	SPECIAL	DETECTABLE WARNING PANEL	382	SF				
23	SPECIAL	MAILBOX REMOVED AND RESET	3	EACH				
							ROADWAY SUBTOTAL =	

BID SCHEDULE

BIDDER agrees to perform all work described in the CONTRACT DOCUMENTS for the following unit prices:

Churchman Road - Phase 2

CITY OF DUBLIN

REF NO.	(1) ITEM	(2) DESCRIPTION	(3) QUANT.	(4) UNIT	(5) LABOR ($)	(6) MATERIAL ($)	(7) (5)+(6) TOTAL ($)	(8) (3) x (7) TOTAL EXTENDED INFORMAL PRICE ($)
		EROSION CONTROL						
24	207	TEMPORARY SEEDING AND MULCHING	7,429	SQ. YD.				
25	207	FILTER FABRIC FENCE	2,158	LIN. FT.				
26	659	SEEDING AND MULCHING, AS PER PLAN	14,858	SQ. YD.				
27	659	COMMERCIAL FERTILIZER	2	TON				
28	659	WATER (FOR IRRIGATION)	82	M. GAL				
29	SPECIAL	NO. 2 STONE CHECK DAM	8	EACH				
29	SPECIAL	INLET SEDIMENT FILTER	22	EACH				
							EROSION CONTROL SUBTOTAL =	
		DRAINAGE						
30	601	TIED CONCRETE BLOCK MAT, TYPE 1	1	EACH				
31	601	ROCK CHANNEL PROTECTION, TYPE C WITH FABRIC FILTER	6	CU. YD.				
32	604	MANHOLE, TYPE C (AA-S102), AS PER PLAN	10	EACH				
33	604	STANDARD CURB AND GUTTER INLET (AA-S125A) WITH BIKE SAFE GRATE, AS PER PLAN	13	EACH				
34	604	DOUBLE CURB AND GUTTER INLET (AA-S125B) WITH BIKE SAFE GRATE, AS PER PLAN	7	EACH				
35	604	STANDARD CATCH BASIN (AA-S133A), AS PER PLAN	2	EACH				
36	604	PRECAST REINFORCED CONCRETE OUTLET	1	EACH				
37	605	4" PIPE UNDERDRAIN, (COLS. 720.01)	5,673	LIN. FT.				
38	605	4" PIPE, UNDERDRAIN SCH. 80	34	LIN. FT.				
39	901	12" PIPE, 706.02, WITH TYPE I BEDDING	1,115	LIN. FT.				
40	901	12" PIPE, 706.02, WITH TYPE I BEDDING (CONCRETE ENCASED)	333	LIN. FT.				
41	901	15" PIPE, 706.02, WITH TYPE I BEDDING	85	LIN. FT.				
42	901	18" PIPE, 706.02, WITH TYPE I BEDDING	577	LIN. FT.				
43	901	30" PIPE, 706.02, WITH TYPE I BEDDING	57	LIN. FT.				

BID SCHEDULE

BIDDER agrees to perform all work described in the CONTRACT DOCUMENTS for the following unit prices:

Churchman Road - Phase 2

CITY OF DUBLIN

REF NO.	(1) ITEM	(2) DESCRIPTION	(3) QUANT.	(4) UNIT	(5) LABOR ($)	(6) MATERIAL ($)	(7) (5)+(6) TOTAL ($)	(8) (3) x (7) TOTAL EXTENDED INFORMAL PRICE ($)
44	901	30" PIPE, 706.02, WITH TYPE I BEDDING (CONCRETE ENCASED)	55	LIN. FT.				
45	SPECIAL	12" ADS FLARED END SECTION	1	EACH				
46	SPECIAL	15" ADS FLARED END SECTION	1	EACH				
47	SPECIAL	30" FLARED END SECTION (CONCRETE)	1	EACH				
							DRAINAGE SUBTOTAL =	
		PAVEMENT						
48	259	15" PERMANENT PAVEMENT, TYPE I	32	CU. YD.				
49	259	10.5" DRIVEWAY PAVEMENT REPLACEMENT, TYPE IIIA	3	CU. YD.				
50	301	3" ASPHALT CONCRETE BASE, PG64-22	515	TON				
51	301	6" ASPHALT CONCRETE BASE, PG64-22	3,402	TON				
52	304	4" AGGREGATE BASE	50	CU. YD.				
53	304	6" AGGREGATE BASE	2,400	CU. YD.				
54	423	CRACK SEALING, TYPE I	30	LB				
55	448	1 1/2" ASPHALT CONCRETE SURFACE COURSE, TYPE 1, MEDIUM TRAFFIC, PG64-22	225	TON				
56	448	1 1/4" ASPHALT CONCRETE SURFACE COURSE, TYPE 1, MEDIUM TRAFFIC, PG64-22	716	TON				
57	448	1 3/4" ASPHALT CONCRETE INTERMEDIATE COURSE, TYPE 2, MEDIUM TRAFFIC, PG64-22	1,003	TON				
58	609	6" CONCRETE COMBINATION CURB AND GUTTER (INCLUDING #57 AGGREGATE BASE)	4,790	LIN. FT.				
59	609	STRAIGHT 18" CONCRETE CURB	3,009	LIN. FT.				
60	609	CONCRETE MOUNTABLE CURB, AS PER PLAN	295	LIN. FT.				
61	SPECIAL	BRICK PAVERS, AS PER PLAN	68	SQ. YD.				
62	SPECIAL	TRUCK APRON PAVEMENT, AS PER PLAN	235	SQ. YD.				
							PAVEMENT SUBTOTAL =	

BID SCHEDULE

BIDDER agrees to perform all work described in the CONTRACT DOCUMENTS for the following unit prices:

Churchman Road - Phase 2

CITY OF DUBLIN

REF NO.	(1) ITEM	(2) DESCRIPTION	(3) QUANT.	(4) UNIT	(5) LABOR ($)	(6) MATERIAL ($)	(7) (5)+(6) TOTAL ($)	(8) (3) x (7) TOTAL EXTENDED INFORMAL PRICE ($)
		WATER WORKS						
63	801	6" DUCTILE IRON WATER PIPE AND FITTINGS, CLASS 52 WITH TYPE I BEDDING	45	LIN. FT.				
64	801	8" DUCTILE IRON WATER PIPE AND FITTINGS, CLASS 52 WITH TYPE I BEDDING	1,653	LIN. FT.				
65	801	12" DUCTILE IRON WATER PIPE AND FITTINGS, CLASS 52 WITH TYPE I BEDDING	38	LIN. FT.				
66	801	16" DUCTILE IRON WATER PIPE AND FITTINGS, CLASS 52 WITH TYPE I BEDDING	1,512	LIN. FT.				
67	802	6" VALVE AND APPURTENANCES	1	EACH				
68	802	8" VALVE AND APPURTENANCES	1	EACH				
69	802	16" VALVE AND APPURTENANCES	4	EACH				
70	807	VALVE BOX ADJUSTED TO GRADE	1	EACH				
71	809	FIRE HYDRANT, TYPE A	7	EACH				
72	809	FIRE HYDRANT, TYPE B	7	EACH				
73	812	AIR RELEASE OUTLET	2	EACH				
74	SPECIAL	SURVEY COORDINATES	1	LUMP				
							WATER WORKS SUBTOTAL =	
		TRAFFIC CONTROL						
75	630	GROUND MOUNTED SUPPORT, NO. 3 POST, TYPE S, AS PER PLAN	635.2	LIN. FT.				
76	630	GROUND MOUNTED SUPPORT ANCHOR POST 2 1/4" SQUARE, AS PER PLAN	51	EACH				
77	630	STREET NAME SIGN SUPPORT, AS PER PLAN	2	EACH				
78	630	SIGN, FLAT SHEET, AS PER PLAN	316.3	SQ FT				
79	630	REMOVAL OF GROUND MOUNTED SIGN AND DELIVERY, AS PER PLAN	2	EACH				

BID SCHEDULE

BIDDER agrees to perform all work described in the CONTRACT DOCUMENTS for the following unit prices:

Churchman Road - Phase 2

CITY OF DUBLIN

REF NO.	(1) ITEM	(2) DESCRIPTION	(3) QUANT.	(4) UNIT	(5) LABOR ($)	(6) MATERIAL ($)	(7) (5)+(6) TOTAL ($)	(8) (3) x (7) TOTAL EXTENDED INFORMAL PRICE ($)
80	630	REMOVAL OF GROUND MOUNTED SIGN AND STORAGE, AS PER PLAN	10	EACH				
81	630	REMOVAL OF GROUND MOUNTED POST SUPPORT AND DISPOSAL	10	EACH				
82	644	CENTERLINE, DOUBLE YELLOW, 4"	0.35	MILE				
83	644	EDGE LINE, YELLOW, 4"	0.50	MILE				
84	644	EDGE LINE, WHITE, 4"	0.12	MILE				
85	644	EDGE LINE, WHITE, 12"	0.03	MILE				
86	644	CHANNELIZING LINE, 8"	337	LIN. FT.				
87	644	STOP LINE, 24"	39	LIN. FT.				
88	644	CROSSWALK LINE, 12"	744	LIN. FT.				
89	644	TRANSVERSE LINE, 12"	102	LIN. FT.				
90	644	LANE ARROW, 84"	4	EACH				
91	644	YIELD LINE, AS PER PLAN	15	EACH				
92	644	DASHED LINE, WHITE, 12" (3' LONG, 3' GAP)	105	LIN. FT.				
							TRAFFIC CONTROL SUBTOTAL =	
		LIGHTING						
93	625	CONNECTION, FUSED PULL APART	14	EACH				
94	625	CONNECTION, UNFUSED PULL APART	28	EACH				
95	625	CONNECTION, UNFUSED PERMANENT	12	EACH				
96	625	STREET LIGHT POLE, TYPE 1, 35'	14	EACH				
97	625	STREET LIGHT FOUNDATION, (24" X 7' DEEP), AS PER PLAN	14	EACH				
98	625	NO.4 AWG 600 VOLT DISTRIBUTION CABLE	10,800	LIN. FT.				
99	625	NO. 12 AWG POLE AND BRACKET CABLE	1,260	LIN. FT.				
100	625	CONDUIT, 2", 725.051, AS PER PLAN	3,225	LIN. FT.				
101	625	CONDUIT, 3", 725.051, SCH 80, AS PER PLAN	281	LIN. FT.				

BID SCHEDULE

BIDDER agrees to perform all work described in the CONTRACT DOCUMENTS for the following unit prices:

Churchman Road - Phase 2

CITY OF DUBLIN

REF NO.	(1) ITEM	(2) DESCRIPTION	(3) QUANT.	(4) UNIT	(5) LABOR ($)	(6) MATERIAL ($)	(7) (5)+(6) TOTAL ($)	(8) (3) x (7) TOTAL EXTENDED INFORMAL PRICE ($)
102	625	LUMINAIRE, CONVENTIONAL, 60 LED, TYPE II, AS PER PLAN	13	EACH				
103	625	LUMINAIRE, CONVENTIONAL, 80 LED, TYPE III, AS PER PLAN	1	EACH				
104	625	TRENCH	3,112	LIN. FT.				
105	625	PULL BOX, 18" X 11" X 18", 725.06	17	EACH				
106	625	GROUND ROD	15	EACH				
107	625	POWER SERVICE, AS PER PLAN	1	EACH				
108	625	PLASTIC CAUTION TAPE	3,112	LIN. FT.				
109	625	LUMINAIRE REMOVED FOR STORAGE, AS PER PLAN	1	EACH				
110	625	LUMINAIRE SUPPORT REMOVED FOR STORAGE, AS PER PLAN	1	EACH				
111	SPECIAL	ELECTRICAL LIGHTING TEST, AS PER PLAN	1	EACH				
							LIGHTING SUBTOTAL =	
		HARDSCAPING						
112	SPECIAL	DRY-LAID STONE RETAINING WALL, AS PER PLAN	60	LIN. FT.				
113	SPECIAL	LARGE LIMSTONE ROCK, AS PER PLAN	4	EACH				
114	SPECIAL	MEDIUM LIMESTONE ROCK, AS PER PLAN	3	EACH				
							HARDSCAPING SUBTOTAL =	
		MAINTENANCE OF TRAFFIC						
115	614	PORTABLE CHANGEABLE MESSAGE SIGN, AS PER PLAN	9	SNMT				
116	614	LAW ENFORCEMENT OFFICER WITH PATROL CAR, AS PER PLAN	60	HR				
117	614	WATER	5	M. GAL				
							MAINTENANCE OF TRAFFIC SUBTOTAL =	

BID SCHEDULE

BIDDER agrees to perform all work described in the CONTRACT DOCUMENTS for the following unit prices:

Churchman Road - Phase 2

CITY OF DUBLIN

REF NO.	(1) ITEM	(2) DESCRIPTION	(3) QUANT.	(4) UNIT	(5) LABOR ($)	(6) MATERIAL ($)	(7) (5)+(6) TOTAL ($)	(8) (3) x (7) TOTAL EXTENDED INFORMAL PRICE ($)
		MISCELLANEOUS						
118	614	MAINTAINING TRAFFIC, AS PER PLAN	1	LUMP				
119	623	CONSTRUCTION LAYOUT STAKES	1	LUMP				
120	624	MOBILIZATION	1	LUMP				
121	SPECIAL	PROOF SURVEY	1	LUMP				
							MISCELLANEOUS SUBTOTAL =	

GRAND TOTAL = _____

TOTAL BID FOR PROJECT: _____

SUBMITTED BY: _____

(COMPANY) _____

C. COMBINED BID/PERFORMANCE/PAYMENT BOND

CITY OF DUBLIN
CHURCHMAN ROAD - PHASE 2

KNOW ALL PERSONS BY THESE PRESENTS, that we, the undersigned _____ (the "Principal") and

_____ (the "Surety"),are hereby held and firmly bound unto the CITY OF DUBLIN, Ohio as obligee in the penal sum of the dollar amount of the bid submitted by the Principal to the CITY OF DUBLIN on _____, 2016 to undertake the project known as the **CITY OF DUBLIN, CHURCHMAN ROAD - PHASE 2.**

The penal sum referred to herein shall be the dollar amount of the Principal's bid to CITY OF DUBLIN, incorporating any additive or deductive alternate proposals made by the Principal on the date referred to above to the CITY OF DUBLIN, which are accepted by the CITY OF DUBLIN. In no case shall the penal sum exceed the amount of _ dollars ($_). (If the foregoing blank is not filled in, the penal sum will be the full amount of the Principal's bid, including alternates. Alternatively, if the blank is filled in, the amount stated must not be less than the full amount of the bid including alternates, in dollars and cents. A percentage is not acceptable.)

For the payment of the penal sum well and truly to be made, we hereby jointly and severally bind ourselves, our heirs, executors, administrators, successors, and assigns.

THE CONDITION OF THE ABOVE OBLIGATION IS SUCH, that whereas the above-named Principal has submitted a bid for the CITY OF DUBLIN, CHURCHMAN ROAD - PHASE 2.

NOW, THEREFORE, if the CITY OF DUBLIN accepts the bid of the Principal and the Principal fails to enter into a proper contract in accordance with the bid, plans, details, specifications, and bills of material; and in the event the Principal pays to the CITY OF DUBLIN the difference not to exceed ten percent of the penalty hereof between the amount specified in the bid and such larger amount for which the CITY OF DUBLIN may in good faith contract with the next lowest bidder to perform the work covered by the bid, or in the event the CITY OF DUBLIN does not award the contract to the next lowest bidder and resubmits the project for bidding, the Principal will pay the CITY OF DUBLIN the difference not to exceed ten percent of the penalty hereof between the amount specified in the bid, or the costs, in connection with the resubmission, of printing new contract documents, required advertising and printing and mailing notices to prospective bidders, whichever is less, then this obligation shall be null and void, otherwise to remain in full force and effect; if the CITY OF DUBLIN accepts the bid of the Principal and the Principal within ten days after the awarding of the contract, enters into a proper contract in accordance with the bid, plans, details specifications, and bills of material, which said contract is made a part of this bond the same as though set forth herein.

NOW ALSO, if the Principal shall well and faithfully do and perform the things agreed by Principal to be done and performed according to the terms of said contract; and shall pay all lawful claims of subcontractors, material men, and laborers, for labor performed and materials furnished in the carrying forward, performing, or completing of said contract; we agreeing and assenting that this undertaking shall be for the benefit of any material man or laborer having a just claim, as well as for the CITY OF DUBLIN herein; then this obligation shall be void; otherwise the same shall remain in full force and effect; it being expressly understood and agreed that the liability of the Surety for any and all claims hereunder shall in no event exceed the penal amount of this obligation as herein stated.

The Surety hereby stipulates and agrees that no modifications, omissions, or additions, in or to the terms of said contract or in or to the plans or specifications therefore shall in any wise affect the obligations of the Surety on the Surety's bond, and the Surety does hereby waive notice of any such modifications, omissions or additions to the terms of the contract or to the plans or specifications.

Signed this _____ day of _____, 2016.

PRINCIPAL:

_____

By: _____

(Signature)

Print Name: _____

Title: _____

Address:

_____

_____

Telephone: ( ) _____

SURETY:

_____

By: _____

(Signature)

Print Name: _____

Title: _____

Address:

_____

_____

Telephone: ( ) _____

SURETY AGENT:

_____

By: _____

(Signature)

Print Name: _____

Title: _____

Address:

_____

_____

Telephone: ( ) _____

D. ALTERNATE BID SECURITY FORM

Bidder Name: _____

Project Name: CHURCHMAN ROAD - PHASE 2

The undersigned Bidder hereby submits with its bid the following bid security equaling 10% of the total amount of the bid as required by Ohio Revised Code Section 153.54:

[ ] A Certified Check

[ ] A Cashier's Check

[ ] A Letter of Credit pursuant to Chapter 1305 of the Ohio Revised Code

A bid guaranty filed under this form shall be conditioned to provide that if the bid is accepted, the bidder, after the awarding or the recommendation for the award of the contract, whichever the CITY OF DUBLIN designates, will enter into a proper contract in accordance with the bid, plans, details, specifications, and bills of material. All bid guaranties filed hereunder shall be payable to the CITY OF DUBLIN, be for the benefit of the CITY OF DUBLIN, and be deposited with, and held by, the CITY OF DUBLIN.

Bidder Signature: _____

Print Name: _____

E. AFFIDAVIT OF AUTHORITY

CITY OF DUBLIN

CHURCHMAN ROAD - PHASE 2

(To be completed and executed if the Contractor is anything other than a sole proprietorship.)

State of _____ (State Where Completing this Form)

County of _____ (County Where Completing this Form) ss:

_____ (Your Name), being duly sworn, deposes and says that he or she is the _____ (Position) of _____ (Business Name), a _____ (Type of Entity) organized and existing under and by virtue of the laws of the State of _____ (State), and having its principal office at:_____(Address), _____ (City), _____ (County),_____ (State).

Affiant further says that he is familiar with the records, minute books and by-laws of_____ (Business Name).

Affiant further says that _____ (Name of Person Signing Contract) _____ (Title of Person Signing Contract) of _____ (Business Name) is duly authorized to sign the Contract for the CITY OF DUBLIN CHURCHMAN ROAD - PHASE 2 Project on behalf of _____ (Business Name) by virtue of _____.

(Describe how the person signing the Contract has Authority to sign for example: "a provision of the by-laws" or "a resolution of the Board of Directors"—if by resolution, give date of adoption.)

_____ , _____ .

(Your Signature) (Your Position)

The foregoing instrument was acknowledged before me this _____ (date) by _____ (name of person acknowledged). Signature and Seal of person taking acknowledgement:

_____

F. COMBINED DELINQUENT PERSONAL PROPERTY TAX & NONCOLLUSION AFFIDAVIT

State of _____ (State Where Completing this Form)

County of _____ (County Where Completing this Form) ss:

_____ (Your Name), Affiant, being first duly sworn, deposes and says:

1. I am the _____ (Your Title) of _____ (Business Name), the Bidder that has submitted the attached Bid;

2. I am fully informed respecting the preparation and contents of the attached Bid and all pertinent circumstances respecting such Bid, and that such Bid is genuine and is not a collusive or sham Bid;

4. Neither the said Bidder nor any of its officers, partners, owners, agents, representatives, employees, or parties in interest, including this affiant, has in any way colluded, conspired, connived, or agreed directly or indirectly with any other Bidder, firm, or person to submit a collusive or sham Bid in connection with the contract for which the attached Bid has been submitted, or to refrain from Bidding in connection with such contract, or has in any manner directly or indirectly sought by agreement, collusion, communication, or conference with any other Bidder, firm, or person to fix the price or prices in the attached Bid or of any other Bidder, or to fix any overhead, profit, or cost element of Bid price or the Bid price of any other Bidder, or to secure through any collusion, conspiracy, connivance, or unlawful agreement any advantage against the **CITY OF DUBLIN**, **OHIO**, or any person interested in the proposed contract; and

5. The price or prices quoted in the attached Bid are fair, proper, and not tainted by any collusion, conspiracy, connivance, or unlawful agreement on the part of the Bidder or any of its agent's representatives, owners, employees, or parties in interest, including this affiant.

6. Effective this _____ day of _____, **2016**, the Bidder:

Choose One

(__) is charged with delinquent personal property taxes on the general list of personal property as set forth below:

County	Amount (include total amount, with penalties and interest thereon)
_____County	$_____
_____County	$_____
_____County	$_____
_____County	$_____

(__) is not charged with delinquent personal property taxes on the general list of personal property in any Ohio county.

Signed: _____

Title: _____

The foregoing instrument was acknowledged before me this _____ (date)

by _____ (name of person acknowledged).

Signature and Seal of person taking acknowledgement:

_____ _____

G. W-9 FORM

Form **W-9**
(Rev. December 2011)
Department of the Treasury
Internal Revenue Service

Request for Taxpayer Identification Number and Certification

Give Form to the requester. Do not send to the IRS.

Print or type
See Specific Instructions on page 2.

Name (as shown on your income tax return)

Business name/disregarded entity name, if different from above

Check appropriate box for federal tax classification:
☐ Individual/sole proprietor ☐ C Corporation ☐ S Corporation ☐ Partnership ☐ Trust/estate

☐ Limited liability company. Enter the tax classification (C=C corporation, S=S corporation, P=partnership) ▶

☐ Other (see instructions) ▶

☐ Exempt payee

Address (number, street, and apt. or suite no.)

Requester's name and address (optional)

City, state, and ZIP code

List account number(s) here (optional)

Part I **Taxpayer Identification Number (TIN)**

Enter your TIN in the appropriate box. The TIN provided must match the name given on the "Name" line to avoid backup withholding. For individuals, this is your social security number (SSN). However, for a resident alien, sole proprietor, or disregarded entity, see the Part I instructions on page 3. For other entities, it is your employer identification number (EIN). If you do not have a number, see *How to get a TIN* on page 3.

Note. If the account is in more than one name, see the chart on page 4 for guidelines on whose number to enter.

Social security number
☐☐☐ – ☐☐ – ☐☐☐☐

Employer identification number
☐☐ – ☐☐☐☐☐☐☐

Part II **Certification**

Under penalties of perjury, I certify that:

1. The number shown on this form is my correct taxpayer identification number (or I am waiting for a number to be issued to me), and
2. I am not subject to backup withholding because: (a) I am exempt from backup withholding, or (b) I have not been notified by the Internal Revenue Service (IRS) that I am subject to backup withholding as a result of a failure to report all interest or dividends, or (c) the IRS has notified me that I am no longer subject to backup withholding, and
3. I am a U.S. citizen or other U.S. person (defined below).

Certification instructions. You must cross out item 2 above if you have been notified by the IRS that you are currently subject to backup withholding because you have failed to report all interest and dividends on your tax return. For real estate transactions, item 2 does not apply. For mortgage interest paid, acquisition or abandonment of secured property, cancellation of debt, contributions to an individual retirement arrangement (IRA), and generally, payments other than interest and dividends, you are not required to sign the certification, but you must provide your correct TIN. See the instructions on page 4.

Sign Here **Signature of U.S. person ▶** **Date ▶**

General Instructions

Section references are to the Internal Revenue Code unless otherwise noted.

Purpose of Form

A person who is required to file an information return with the IRS must obtain your correct taxpayer identification number (TIN) to report, for example, income paid to you, real estate transactions, mortgage interest you paid, acquisition or abandonment of secured property, cancellation of debt, or contributions you made to an IRA.

Use Form W-9 only if you are a U.S. person (including a resident alien), to provide your correct TIN to the person requesting it (the requester) and, when applicable, to:

1. Certify that the TIN you are giving is correct (or you are waiting for a number to be issued),
2. Certify that you are not subject to backup withholding, or
3. Claim exemption from backup withholding if you are a U.S. exempt payee. If applicable, you are also certifying that as a U.S. person, your allocable share of any partnership income from a U.S. trade or business is not subject to the withholding tax on foreign partners' share of effectively connected income.

Note. If a requester gives you a form other than Form W-9 to request your TIN, you must use the requester's form if it is substantially similar to this Form W-9.

Definition of a U.S. person. For federal tax purposes, you are considered a U.S. person if you are:

- An individual who is a U.S. citizen or U.S. resident alien,
- A partnership, corporation, company, or association created or organized in the United States or under the laws of the United States,
- An estate (other than a foreign estate), or
- A domestic trust (as defined in Regulations section 301.7701-7).

Special rules for partnerships. Partnerships that conduct a trade or business in the United States are generally required to pay a withholding tax on any foreign partners' share of income from such business. Further, in certain cases where a Form W-9 has not been received, a partnership is required to presume that a partner is a foreign person, and pay the withholding tax. Therefore, if you are a U.S. person that is a partner in a partnership conducting a trade or business in the United States, provide Form W-9 to the partnership to establish your U.S. status and avoid withholding on your share of partnership income.

Cat. No. 10231X Form **W-9** (Rev. 12-2011)

H. LIST OF SUBCONTRACTORS

CITY OF DUBLIN

CHURCHMAN ROAD - PHASE 2

NOTE: The bidder must perform at least 50% of the total contract cost with its own forces.

1. Name of Subcontractor (Include names of any parent company) :_____

Federal Identification Number: _____

Address _____

_____

Type of Work:

Subcontractor to Provide:_____

Approximate Percentage of the Contract Cost to be Performed by Subcontractor: _____

Experience Record: _____

_____

_____

2. Name of Subcontractor (Include names of any parent company) :_____

Federal Identification Number: _____

Address: _____

_____

Type of Work:

Subcontractor to Provide:_____

Approximate Percentage of the Contract Cost to be Performed by Subcontractor: _____

Experience Record: _____

_____

_____

3. Name of Subcontractor (Include names of any parent company) :_____

Federal Identification Number: _____

Address: _____

_____

Type of Work:

Subcontractor to Provide:_____

Approximate Percentage of the Contract Cost to be Performed by Subcontractor: _____

Experience Record: _____

_____

_____

4. Name of Subcontractor (Include names of any parent company) :_____

Federal Identification Number: _____

Address: _____

_____

Type of Work:

Subcontractor to Provide:_____

Approximate Percentage of the Contract Cost to be Performed by Subcontractor: _____

Experience Record: _____

_____

_____

5. Name of Subcontractor (Include names of any parent company) :_____

Federal Identification Number: _____

Address: _____

_____

Type of Work:

Subcontractor to Provide:_____

Approximate Percentage of the Contract Cost to be Performed by Subcontractor: _____

Experience Record: _____

_____

_____

Add additional sheets if necessary.

I. CONTRACTOR QUALIFICATION STATEMENT

Contractor: _____

Date: _____

Project: **CHURCHMAN ROAD - PHASE 2**

The foregoing Contractor submits this Statement of Qualifications to the CITY OF DUBLIN, OHIO as part of its bid for the above named Project and represents that the information contained herein is complete and accurate to the best of the Contractor's knowledge. The CITY OF DUBLIN reserves the right to reject any, part of any, or all bids and to waive any informalities and irregularities. The Contractor expressly acknowledges this right of the CITY OF DUBLIN to reject any or all bids or to reject any incomplete or irregular bid. Contractor must furnish all information requested on this Statement of Qualifications. Failure to do so may result in disqualification of the bid. The CITY OF DUBLIN may consider the information submitted on this form in determining the lowest and best Contractor for the Project giving such weight to each item as the CITY OF DUBLIN deems appropriate. The CITY OF DUBLIN may conduct such investigations and request such documents as are deemed necessary to establish the qualifications and financial ability of the Contractor and its subcontractors and suppliers.

The Contractor authorizes the CITY OF DUBLIN and its representatives to contact the owners, design professionals, and others having knowledge (collectively "Contacts") on projects on which the Contractor has worked—whether listed on this form or not—and authorizes and requests such Contacts to provide the CITY OF DUBLIN with a candid evaluation of the Contractor's performance. By submitting its bid, the Contractor agrees that if it or any person, directly or indirectly, on its behalf or for its benefit brings an action against any of such Contacts or the employees of any of them as a result of or related to such candid evaluation, the Contractor will indemnify and hold harmless such Contacts and the employees of any of them from any claims whether or not proven that are part of or are related to such action and from all legal fees and expenses incurred by any of them arising out of or related to such legal action. This obligation is expressly intended for the benefit of such Contacts and the employees of each of them. By submitting this form, Contractor agrees that the CITY OF DUBLIN's determination of which Contractor is the lowest and best Contractor shall be final and conclusive, and that if the Contractor or any person on its behalf challenges such determination in any legal proceeding, the Contractor will indemnify and hold the CITY OF DUBLIN and its employees and agents harmless from any claims included or related to such legal proceeding, whether or not proven, and from legal fees and expenses incurred by the City, its employees, or agents that arise out of or are related to such challenge.

NAME OF PROJECT: CHURCHMAN ROAD - PHASE 2

1. ORGANIZATION

1.1 How many years has your organization been in business as a Contractor?

1.2 How many years has your organization been in business under its present business name?

1.2.1 Under what other or former names has your organization operated?

1.3 If your organization is a corporation, answer the following:

1.3.1 Date of incorporation:

1.3.2 State of incorporation:

1.3.3 President's name:

1.3.4 Vice President's name(s):

1.3.5 Secretary's name:

1.3.6 Treasurer's name:

1.4 If your organization is a partnership, answer the following:

1.4.1 Date of organization:

1.4.2 Type of partnership (if applicable):

1.4.3 Name(s) of general partner(s):

1.5 If your organization is individually owned, answer the following:

1.5.1 Date of organization:

1.5.2 Name of owner:

1.6 If the form of your organization is other than those listed above, describe it and name the principals:

2. LICENSING

2.1 List jurisdictions and trade categories in which your organization is legally qualified to do business, and indicate registration or license numbers, if applicable.

2.2 List jurisdictions in which your organization's partnership or trade name is filed.

3. EXPERIENCE

3.1 List the categories of work that your organization normally performs with its own forces.

3.2 Claims and Lawsuits (If the answer to any of the questions below is yes, please attach details.)

3.2.1 Has your organization ever failed to complete any work?

3.2.2 Within the last five (5) years has your organization or any of its officers initiated any Claims, had any Claims initiated against it or them, or been involved in or is currently involved in any mediation or arbitration proceedings or lawsuits suits related to any construction project, or has any judgments or awards outstanding against it or them? If the answer is yes, please attach the details for each Claim, including the names and telephone numbers of the persons who are parties, the amount of the Claim, the type of Claim and basis for the Claim, and the outcome.

Note: As used in this document "Claim" means a Claim initiated under the Contract Documents for a project.

3.3 Within the last five years, has any officer or principal of your organization ever been an officer or principal of another organization when it failed to complete a construction contract? If the answer is yes, please attach details for each instance, including the names and telephone numbers of the persons who are parties to the contract, and the reason(s) the contract was not completed.

3.4 On a separate sheet, list construction projects your organization has in progress with an original Contract Sum of more than $ 1,870,000.00, giving the name of project, owner and its telephone number, design professional and its telephone number, contract amount, percent complete and scheduled completion date.

3.4.1 State total amount of work in progress and under contract:

3.5 Provide the following information for each contract your organization has had during the last five (5) years, including current contracts, where the Contract Sum is fifty percent (50%) or more of the bid amount for this Project, including add alternates. If there are more than ten (10) of these contracts only provide information on the most recent ten (10) contracts, including current contracts.

Project And Work	Contract Sum	Owner's Representative & Telephone Number	Engineer's Or Architect's Representative Name & Telephone Number

3.5.1 Provide the following information for each project your organization has had during the last five (5) years, which your organization believes is of comparable or greater size and complexity than the Owner's project. If there are more than five (5) of these projects, only provide information on the most recent five (5) projects, including current projects.

Project And Work	Contract Sum	Owner's Representative & Telephone Number	Engineer's Or Architect's Representative Name & Telephone Number

3.5.2 State average annual amount of construction work your organization has performed during the last five years.

3.5.3 If any of the following members of your organization's management--president, chairman of the board, or any director--operates or has operated another construction company during the last five (5) years, identify the member of management and the name of the construction company.

3.5.4 If your organization is operating under a trade name registration with the Secretary of State for the State of Ohio, identify the entity for which the trade name is registered. If none, state "none."

3.5.5. If your organization is a division or wholly-owned subsidiary of another entity or has another relationship with another entity, identify the entity of which it is a division or wholly-owned subsidiary or with which it has another relationship and also identify the nature of the relationship. If none, state "not applicable."

3.6 On a separate sheet, list the construction education, training and construction experience for each person who will fill a management role on the Project, including without limitation the Project Executive, Project Engineer, Project Manager, and Project Superintendent. For each person listed, include with the other information

the last three projects on which the person worked and the name and telephone number of the Design Professional and the Owner.

4. REFERENCES

4.1 Trade References:

4.2 Bank References:

4.3 Surety:

4.3.1 Name of bonding company:

4.3.2 Name and address of agent:

5. FINANCING

5.1 Financial Statement - Upon submission of your bid you agree to make the following financial information available to the City if requested :

5.1.1 An audited financial statement if available and, if not, a reviewed financial statement, including your organization's latest balance sheet and income statement showing the following items:

Current Assets (e.g., cash, joint venture accounts, accounts receivable, notes receivable, accrued income, deposits, materials inventory and prepaid expenses);

Net Fixed Assets;

Other Assets;

Current Liabilities (e.g., accounts payable, notes payable, accrued expenses, provision for income taxes, advances, accrued salaries and accrued payroll taxes); and

Other Liabilities (e.g., capital, capital stock, authorized and outstanding shares par values, earned surplus and retained earnings).

5.1.2 Name and address of firm preparing attached financial statement, and date thereof.

5.1.3 Is the attached financial statement for the identical organization named on page one?

5.1.4 If not, explain the relationship and financial responsibility of the organization whose financial statement is provided (e.g., parent-subsidiary).

5.2 Will the organization whose financial statement is attached act as guarantor of the contract for construction?

Certification. The undersigned certifies for the reliance of the Owner that after diligent investigation, to the best of the undersigned's belief, the information provided with this Contractor's Qualification Statement is true, accurate and not misleading.

SIGNATURE

Dated at this ____ day of _____, 2016.

Name of Organization: _____

By: _____(Print Name)

Signature: _____

Title: _____

_____, being duly sworn, deposes and says that the information provided herein is true and sufficiently complete so as not to be misleading.

Subscribed and sworn before me this _____ day of _____, 2016.

_____
Notary Public

My Commission Expires: _____

SEAL

CONTRACTOR'S ORGANIZATION

General Information

Address:_____

Telephone and Facsimile: _____

E-mail address: _____

Web site: _____

If address given above is a branch office address, provide principal home office address: _____

_____

Type of Organization

The Contractor's Organization is a:

__ Corporation

Date and State of Incorporation: _____

Executive Officers: (Names and Addresses)_____

_____

__ Partnership

Date and State of Organization: _____

Type of Partnership: __ General __ Limited __ Limited Liability __ Other: _____

Current General Partners: (Names and Addresses)_____

_____

__ Joint Venture

Date and State of Organization: _____

Joint Venturers: (For each indicate the name, address and form and state of organization, as well as the managing or controlling Joint Venturer if applicable.)_____

_____

_____

_____

__ Limited Liability Company

Date and State of Organization: _____

Members: (Names and Addresses)_____

_____

_____

_____

__ Sole Proprietorship

Date and State of Organization: _____

City or Citys: (Names and Addresses)_____

_____

__ Other

Type of Organization: _____

State of Organization: _____

Citys and/or Principals: (Names and Addresses)_____

_____

In addition to the above categories of business entities, indicate whether Contractor's organization is certified as a:

__ Disadvantaged Business Enterprise Certified by:

_____

__ Minority Business Enterprise Certified by:

_____

__ Women's Business Enterprise Certified by:

_____

__ Historically Underutilized Business Zone Small Business Concern Certified by:_____

LICENSING AND REGISTRATION

Jurisdictions in which Contractor is legally qualified to practice: (Indicate license or registration numbers for each jurisdiction, if applicable, and type of license or registration. Attach separate sheet as necessary.)

_____

_____

In the past five years, has Contractor had any business or professional license suspended or revoked? __ Yes __ No

If yes, describe circumstances on separate attachment, including jurisdiction and bases for suspension or revocation.

CONTRACTOR'S PERSONNEL AND APPROACH

Key Construction Personnel. Create and attach Schedule A, listing the Contractor's: 1) Key Construction Personnel who will work on the Project; 2) their construction experience; and, 3) the percentage of time that each is anticipated to devote to the Project.

List types of work generally performed by Contractor's own work force:

_____

_____

_____

Subcontractors

Indicate criteria used in the selection of subcontractors (Indicate if Not Applicable).

__ Price

__ Financial strength

__ Bonding capacity

__ Previous experience with Contractor

__ Previous experience in industry

__ Subcontractor's reputation in industry

__ Availability of sufficient personnel

__ Safety record

__ Other: _____

State Contractor's policy on the bonding of its subcontractors:_____

_____

_____

Describe Contractor's proposed technical and management approach to the Project, including approaches to quality, time and cost control: (Attach additional sheets as necessary.)

CONTRACTOR'S RELEVANT EXPERIENCE

Past Projects List. In the chart below, list at least five construction projects Contractor has worked on in the past five (5) years with project delivery systems similar in size and scope to the one to be employed for this Project. (For Joint Ventures, list each joint venturer's projects separately).

City Name	Project Type	Contract Amount	Completion Date	Contact Name and Number

Current Projects List. In the chart below, list all current projects of the Contractor, including projects not yet underway, approximate dollar value of each and the percentage of completion of each project. (For Joint Ventures, list each joint venturer's projects separately).

City Name	Project Type	Contract Amount	Percentage Complete	Contact Name and Number

Annual Construction Volume. Indicate the annual volume of work completed for the past three years:

Year ____ _____

Year ____ _____

Year ____ _____

In the past five years, has Contractor defaulted, been terminated for cause or failed to complete a construction contract awarded to it? __ Yes __ No

If yes, describe circumstances on separate attachment, including dates and owner, and if applicable, Contractor's surety.

In the past five years, has any officer, partner, joint venturer or proprietor of the Contractor ever failed to complete a construction contract awarded to that person or entity in their name or on behalf of another organization? __ Yes __ No

If yes, describe circumstances on separate attachment, including dates and City, and if applicable, surety.

Describe all litigation arising from Contractor's active projects or projects worked on within the last five years. (Attach additional sheets as necessary.)

CONTRACTOR'S SAFETY PROGRAM

If Contractor has a written safety program, attach a copy.

Does the Contractor's safety program include instructions on the following:

Safety work practices __ Yes __ No

Safety supervision __ Yes __ No

Toolbox safety meetings __ Yes __ No

Emergency procedures __ Yes __ No

First aid procedures __ Yes __ No

Accident investigation __ Yes __ No

Fire protection __ Yes __ No

New workers' orientation __ Yes __ No

Do you have a safety officer/department in your company? __ Yes __ No

If yes,

Name: _____

Title: _____

Phone: _____

Do you conduct project safety inspections? __ Yes __ No

If yes, how often? _____

Who conducts this inspection?

Name: _____

Title: _____

Do you hold project safety meetings for field supervisors? __ Yes __ No

If yes, how often? __ Weekly __ Bi-weekly __ Monthly __ Less often as needed

Do you have in place an instruction program on safety for newly hired or promoted supervisors? __ Yes __ No

If yes, please attach a copy of program format.

If craft "toolbox" safety meetings are held, what is their frequency? __ Weekly __ Bi-weekly __ Monthly __ Less often as needed

Do you have a drug and alcohol testing policy? __ Yes __ No

If Yes, attach a copy of the policy.

Provide Contractor's OSHA No. 300 Log and Summary of Occupational Injuries and Illnesses for the past five years.

List all OSHA Citations and Notifications of Penalty, monetary or other, received within the last five years: (Indicate final disposition as applicable. Attach additional sheets as necessary.)

List all safety citations of violations under state law received within the last five years: (Indicate final disposition as applicable. Attach additional sheets as necessary.)

SURETY AND INSURANCE

Surety Company: (Name and Address)

Agent: (Name, Address and Telephone Number)

Total bonding capacity: $ _____

Limit per project: $ _____

Available bonding capacity as of this date: $ _____

CONTRACTOR FINANCIAL INFORMATION

List principal banks used, the approximate value of outstanding loans and general repayment history, as well as the Name, Address and Telephone Number of a contact person:

If requested by the City, provide audited financial statements for the past three (3) years, if available, and if not, then reviewed financial statements, including the information required in Section 5 – Financing, above.

State whether Contractor, or any of the individuals identified in Article 1, has/have been the subject of any bankruptcy proceeding within the last five (5) years.

__ Yes __ No

If yes, describe circumstances on separate attachment.

STATEMENT OF POTENTIAL CONFLICTS OF INTEREST

Provide information about any business associations, financial interests or other circumstances that may create a conflict of interest with the City or any other Party known to be involved in the Project.

OTHER INFORMATION

Within the past five years, has Contractor, or any of the individuals identified in Article 1 and/or Schedule A been the subject of any criminal indictment or judgment of conviction for any business-related conduct constituting a crime under state or federal law? __ Yes __ No

If yes, describe circumstances on separate attachment.

Within the past five years, has Contractor or any of the individuals identified in Article 1 and/or Schedule A been the subject of any federal or state suspension or disbarment? __ Yes __ No

If yes, describe circumstances on separate attachment.

Within the past five years, has Contractor, or any of the individuals identified in Article 1 and/or Schedule A been the subject of any formal proceeding or consent order with a state or federal environmental agency involving a violation of state or federal environmental laws? __ Yes __ No

If yes, describe circumstances. (Attach additional sheets as necessary.)

REFERENCES

Provide one additional reference for each of the following categories.

1. City

Name: _____

Address: _____

Telephone No.: _____

Contact Person: _____

2. Architect/Engineer

Name: _____

Address: _____

Telephone No.: _____

Contact Person: _____

3. Subcontractor

Name: _____

Address: _____

Telephone No.: _____

Contact Person: _____

The Undersigned, on behalf of the Contractor, certifies under that the information provided here, or attached to this form, is true and sufficiently complete to the best of the Contractor's knowledge.

CONTRACTOR

Signature_____

Printed Name: _____

Title: _____

Date: _____

III. ADDITIONAL CONTRACT DOCUMENTS

A. CITY OF DUBLIN/CONTRACTOR AGREEMENT

STANDARD AGREEMENT

CITY OF DUBLIN, OHIO

INTRODUCTION

This Agreement is entered into on , by and between the CITY OF DUBLIN, OHIO ("Owner"), located at 5200 Emerald Parkway, Dublin, Ohio 43017 , and ("Contractor'), located at for the CITY OF DUBLIN CHURCHMAN ROAD - PHASE 2 ("Project").

THIS DOCUMENT HAS IMPORTANT LEGAL CONSEQUENCES. CONSULTATION WITH AN ATTORNEY IS ENCOURAGED WITH RESPECT TO ITS EXECUTION, COMPLETION AND MODIFICATION.

The Owner, a political subdivision of the State of Ohio, and the Contractor have entered into this Owner-Contractor Agreement ("Agreement") as of the date set forth above. The Owner and the Contractor agree as follows:

1 WORK.

1.1 The Contractor shall furnish all the labor, services, materials, plant, equipment, tools, scaffolds, appliances, transportation, and all other things (collectively called the "Work") necessary for the timely and proper completion of the Work described in the Contract Documents for the Project. The Contractor shall provide the Performance and Payment Bonds on the forms and in the manner described in the Contract Documents.

1.2 CLEANUP. Contractor shall cleanup, repair, restore and otherwise return any site or location provided by Owner to the condition in which it was delivered to Contractor. Contractor shall repair, at its sole expense, any property it damages, whether part of the work or not, to a condition acceptable to Owner.

1.3 COMPLETION. The Project shall be finally completed by: September 30, 2016. The Contractor shall at all times furnish sufficient skilled workers, materials, and equipment to perform the Work in strict conformance with the Contract Documents and to the entire satisfaction of the Owner, so as to complete the Project by the Date for Final Completion. All materials and equipment provided shall be new, free from all defects, fit for the purpose for which intended, and merchantable.

1.4 SUPERVISION. The Contractor shall assign a competent Project Supervisor who shall be present on site. At the Owner's request and without additional charge to Owner, the Contractor shall replace the Project Supervisor. The Owner's Representative shall not be responsible for the acts or omissions of the Project Supervisor or his assistants. At a minimum, the Project Supervisor shall be present on site whenever any Contractor or Subcontractor personnel are present on site.

1.5 TAXES AND FEES. Contractor is subject to and responsible for paying fees to obtain all applicable licenses, permits, and other permissions necessary to perform its obligations under this Contract. Contractor is responsible for paying federal, state, and local taxes. Contractor agrees to

withhold all income taxes due or payable under the provisions of Income Tax Ordinances of the Owner, for qualifying wages, salaries, and commissions paid to its employees and further agrees that any of its sub-contractors shall be required to agree to withhold any such income taxes due for services performed under this Contract.

2 CONTRACT DOCUMENTS.

2.1 The Contract Documents consist exclusively of:

- This Agreement Addenda
- Invitation to Bid
- Instructions to Bidders
- Prevailing Wage Rates (if Applicable)
- Proposal
- Bid Schedule
- Performance and Payment Bonds
- Delinquent Personal Property Tax & Noncollusion Affidavit
- Affidavit of Authority (If applicable)
- List of Subcontractors
- Contractor Qualification Statement
- The current version of the CITY OF DUBLIN General Conditions Division 100
- Supplemental or Special General Conditions
- The current version of the CMS, Specification sections 200 through 1000
- Specifications
- Supplemental Specifications
- Notice of Award to Bidder
- Notice to Proceed
- Final Affidavit of Compliance with Prevailing Wages
- Plans and Drawings

3 OWNER'S REPRESENTATIVE.

3.1 The City Engineer and/or his designee is the Owner's Representative with respect to all matters involving the Owner.

3.2 Except as specifically stated to the contrary elsewhere in this Agreement, the Contractor shall direct all communications to the Owner through the Owner's Representative, although the City Manager and Fiscal Officer of the Owner are also authorized to send written communications to the Contractor.

3.3 The Owner's Representative will monitor the progress of the Contractor's Work and will conduct regular inspections of the progress of the Work as provided in the Contract Documents. Such inspections shall not relieve the Contractor of any of its obligations under the Contract Documents.

3.4 The Contractor shall at all times provide the Owner's Representative access to the Work.

4 TIME FOR COMPLETION AND PROJECT COORDINATION.

4.1 Project Time Schedule. The Owner anticipates that Work on the Project will begin upon its issuance of a Notice to Proceed and be completed by September 30, 2016, unless the Owner and Contractor agree to different commencement and completion dates.

4.2 Contractor is responsible for scheduling its subcontractors and for any delay resulting from their performance.

4.3 TIME IS OF THE ESSENCE. THE DATES IN THE PROJECT TIME SCHEDULE ARE OF THE ESSENCE OF THIS AGREEMENT. THE CONTRACTOR SHALL PROSECUTE ITS WORK IN ACCORDANCE WITH THE PROJECT TIME SCHEDULE, INCLUDING ANY AMENDMENTS THERETO.

5 DELAYS AND ACCELERATIONS.

5.1 NOTICE OF DELAYS. The Contractor shall give the Owner written notice of any delay affecting its Work within 24 hours of the commencement of the delay as required in 104.03.B of the General Conditions. The failure to give the required notice or include the required "NOTICE OF DELAY" language shall constitute an irrevocable waiver of the Contractor's right to seek an extension of time and/or additional compensation/damages for the delay. The Owner, in its sole and reasonable discretion, shall determine whether a delay shall entitle the Contractor to an extension of time, additional payment, or both.

5.2 ACCELERATION OF THE WORK. If the Contractor fails to perform as required by the Contract schedule, the Owner may require the Contractor to accelerate its Work by adding workers or working additional shifts, extended shifts or overtime, so that the Work is in final form before the Date for Final Completion. If the Owner requires the Contractor to accelerate its Work, the Contractor shall take the required action within two days of the Notice. If the acceleration is not due to fault of the Contractor, Owner shall issue a Change Order increasing the Contract Sum to pay the Contractor for the Contractor's additional costs of accelerating its Work so that the Work is in final form before the Date for Final Completion. If there is a dispute as to whether the Contractor is entitled to a Change Order for accelerating its Work, the Contractor shall proceed to accelerate its Work without waiting for a Change Order or payment of any additional compensation, but may reserve its right to make a claim against the Owner for its additional costs incurred in accelerating its Work. The Contractor's additional costs for accelerating its Work shall be determined in accordance with Paragraph 5.2.2.

5.2.1 OWNER'S OBLIGATION TO PAY. The Owner shall pay the Contractor, as provided in this Paragraph, for the Contractor accelerating its Work so that its Work is in final form before the Date for Final Completion so long as the acceleration is not required as a result of the Contractor's failure to stay on schedule. The Owner shall not be required to compensate the Contractor for accelerating its Work based on the Contractor's own decision so that the Work is in final form by the Date for Final Completion.

5.2.2 COMPENSATION FOR ACCELERATION OF THE WORK. To the extent that the Owner requires the Contractor to accelerate its Work and is obligated to pay under Section 5.2.1, the Owner shall pay the Contractor for the Contractor's additional costs of accelerating its Work, as determined in accordance with this Paragraph. The additional costs of accelerating the Work shall be (a) any premium for overtime, additional shift work, or extended shift work, (b) the cost of any additional supervision required by the acceleration, (c) out of pocket cost of any additional equipment required for the acceleration, and (d)

overhead, including home office overhead, and profit equal to ten percent (10%) of the total amount of items (a) and (b) for which additional compensation is permitted under this Paragraph. The foregoing shall be the only additional compensation and/or damages the Contractor shall be entitled to receive for accelerating its Work so that it is complete before the Date for Final Completion. As a condition precedent to its recovery of additional compensation, the Contractor shall provide the Owner with full information about the costs of accelerating its Work in the form and format requested by the Owner.

6 CORRECTIVE ACTION.

6.1 If the Owner determines that the Contractor is not cooperating or coordinating its work properly with its subcontractors, not supplying sufficient skilled workers, not cleaning up the Project, not furnishing the necessary materials, equipment, or any temporary services or facilities to perform the Work in strict conformance with the Contract Documents, or the Contractor is not on schedule, or is not otherwise performing its obligations under the Contract Documents, THE CONTRACTOR SHALL IMMEDIATELY, AND IN NOT LESS THAN FORTY-EIGHT (48) HOURS AFTER NOTICE OF SUCH DETERMINATION, OR SUCH LESSER TIME AS MAY BE PROVIDED IN THE CONTRACT DOCUMENTS, (1) COMMENCE SUCH ACTION AS IS NECESSARY TO CORRECT THE DEFICIENCIES NOTED BY THE OWNER, (2) PROCEED TO USE ITS BEST EFFORTS TO CORRECT SUCH DEFICIENCIES WITHIN THIRTY (30) DAYS OF SUCH NOTICE OR BY THE DEADLINE FOR COMPLETION OF THE PROJECT SET FORTH IN THIS AGREEMENT WHICHEVER IS SOONER AND/OR, (3) IF THE OWNER INSTRUCTS THE CONTRACTOR TO TAKE SPECIFIED CORRECTIVE ACTION, SHALL IMMEDIATELY TAKE SUCH CORRECTIVE ACTION, including but not limited to increasing the number of skilled workers, providing temporary services or facilities, and cleaning up the Project. Such corrective action shall be taken and continued uninterruptedly without waiting to initiate any dispute under Paragraph 11 of this Agreement or the resolution of any dispute initiated under such paragraph.

7 CONTRACT SUM. The lump sum Contract Sum to be paid by the Owner to the Contractor, as provided herein, for the satisfactory performance and completion of the Project and all of the duties, obligations and responsibilities of the Contractor under this Agreement and the other Contract Documents will be $. The Contract Sum includes all federal, state, county, municipal, and other taxes imposed by law, including but not limited to any sales, use, and personal property taxes payable by or levied against the Contractor because of the Work or the materials incorporated into the Work. The Contractor shall pay any such taxes.

8 LIQUIDATED DAMAGES.

8.1 The Contractor shall have its Work completed by the Completion Date stated in Paragraph 1.3; the timeline may be varied following award of the contract based upon the Contractor’s ability to perform the work on a different timeline acceptable to the Owner. By entering into this Agreement, the Contractor agrees that the period for performing the Work is reasonable and that the Contractor's Work can be substantially complete by the date stated in this Agreement.

8.2 If the Contractor does not have its Work on the Project complete by the Completion Date or as otherwise agreed by the parties, the Contractor will pay the Owner (and the Owner may set off from sums coming due the Contractor) liquidated damages as set forth in 108.07 of the General Conditions.

8.3 The Contractor acknowledges by signing this Agreement with the Owner that the amount of liquidated damages represents a reasonable estimate of the actual damages the Owner

would incur if the work is not substantially complete by the foregoing date and that the damages that may result from the failure to substantially complete the work by the foregoing date are uncertain and difficult to ascertain. These liquidated damages are damages for loss of use of the Project, and the Contractor in addition to the liquidated damages will be obligated to indemnify and hold the Owner harmless from any claims, and if the Work on the Project is accelerated because of delay, for all costs related to the acceleration of the Work, as provided in the Contract Documents. In addition to such Liquidated Damages, the Contractor shall indemnify, defend and hold the Owner and its employees and agents harmless from any and all claims, whether or not such claims are proven, and from all costs and expenses incurred, as a result of or related to such claims, including but not limited to attorneys' and consultants' fees and expenses, provided that such claims arise out of or are related to the Contractor's failure to Substantially Complete its Work by its Date for Substantial Completion. These Liquidated Damages are in addition to any other remedies available to the Owner under the Contract Documents.

9 LIMITATION AND LIABILITY.

9.1 The Owner's total liability under this Agreement shall be limited to the amount set forth in the Finance Director's certificate accompanying this Agreement. Under no circumstances shall the elected officials, officers, employees, council members, or agents of the Owner be personally liable for any obligations or claims arising out of or related to this Agreement.

10 PAYMENT

10.1 APPLICATIONS FOR PAYMENT. Payment applications shall be submitted on a monthly basis and shall reflect the amount of work completed as of the date the application for payment is submitted. On or before Completion, the Contractor shall submit to the Owner, an itemized payment application for such period in the following format and with one copy of the following documentation: 1) Invoice for work performed and materials and equipment provided for the previous pay period; 2) Current list of the Contractor's Subcontractors and suppliers showing their respective contract sums, amount paid, and amount due; 3) Contractor's Affidavit of Release of Liens with and lien releases in the format provided by the Owner for all the Contractor's Subcontractors and suppliers current through the date of the Contractor's previous Application for Payment; 4) Such other supplemental information as the Owner may require. Such other information may include a schedule of all materials and equipment stored on site.

10.2 The Owner may withhold payment in whole or in part, and may demand that the Contractor refund amounts previously paid, to protect the Owner from loss because of: 1) The Contractor's default or failure to perform any of its obligations under the Contract Documents, including but not limited to: failure to provide sufficient skilled workers; Work, including equipment or materials, which is defective or otherwise does not conform to the Contract Documents; failure to conform to the Project Time Schedule; and failure to follow the directions of or instructions from the Owner; 2) The Contractor's default or failure to perform any of its obligations under another contract that it has with the Owner; 3) The filing of third party claims, or reasonable evidence that third party claims have been or will be filed; 4) The Work has not proceeded to the extent set forth in the application for payment; 5) Any representations made by the Contractor are untrue; 6) The failure of the Contractor to make payments to its Subcontractors; 7) Damage to the Owner's property or the property of another person or laborer; 8) The determination that there is a substantial possibility that the Work cannot be completed for the unpaid balance of the Contract Sum; and/or 9) Liens filed or reasonable evidence indicating the probable filing of such liens.

10.3 The Owner will pay the Contractor within 30 days after receipt of the Contractor's payment application, provided that the payment application has been properly submitted on a timely basis and is accompanied by all of the required documentation. The Owner may establish a cut-off date for the submission of the payment application.

11 RETAINAGE.

11.1 AMOUNT OF PAYMENTS. Subject to Paragraph 8.1, the amount of the payments to the Contractor shall be determined in accordance with the following paragraphs:

11.2 PAYMENTS. Payments under the contract shall be made at the rate of 95% of the amount set forth in the Contractor's payment application and approved by the Owner until the Work is 50% complete. When more than fifty percent (50%) of the Work has been completed, the amount retained may be reduced at the City's sole discretion. The Engineer may also, at any time, increase retainage by any amount needed to protect the City's interests with respect to any incomplete, defective or unsatisfactory Work; costs or damages incurred by the City that are subject to the Contractor's indemnification obligations; or back charges that the City may assess against the Contractor.

11.3 DOCUMENTATION. Upon request, the Contractor immediately shall supply the Owner with such information as may be requested so as to verify the amounts due to the Contractor, including but not limited to original invoices for materials and equipment and documents showing that the Contractor has paid for such materials and equipment, and so as to verify that amounts due laborers, subcontractors, and materialmen have been paid to them.

11.4 FINAL PAYMENT.

11.4.1 The final application for payment shall be itemized, and the Contractor shall ensure that the final application for payment shall contain one (1) copy of each of the following documents, if not previously delivered to the Owner: 1) All items from Paragraph 10.1; 2) Consent of the Contractor's Surety to Payment; 3) An assignment to the Owner of all warranties obtained or obtainable by the Contractor from manufacturers and suppliers of equipment and materials incorporated into the Work by written instrument of assignment in a form acceptable to the Owner; and 4) Such other documentation as required by the Contract Documents, the Owner, or applicable law.

11.4.2 The making of Final Payment by the Owner shall not constitute a waiver of Claims by the Owner for the following: 1) Liens, Claims, security interests, or encumbrances arising out of the Contract Documents that are unsettled; 2) Failure of the Work to comply with the requirements of the Contract Documents; 3) Terms of special warranties required by the Contract Documents; 4) Claims for Indemnification; 5) Claims about which the Owner has given the Contractor written notice; or 6) Claims arising after Final Payment.

11.5 ESCROW ACCOUNT. The Owner and the Contractor agree that no escrow account shall be required in connection with this Agreement and that retained funds will not earn interest.

12 CHANGE ORDERS.

12.1 A Change Order is a written instrument signed by the Owner and the Contractor stating their agreement upon a change in the Work, the amount of the adjustment or the method for computing the amount of the adjustment of the Contract Sum, if any, and the extent of the adjustment in the Project Time Schedule, if any.

13 GENERAL.

13.1 MODIFICATION. No modification or waiver of any of the terms of this Agreement or of any other Contract Documents shall be effective against a party unless set forth in writing and signed by or on behalf of a party, which in the case of the Owner shall require the signature of the Owner's Representative acting under the authority of a specific resolution of the Owner. Under no circumstances shall forbearance, including the failure or repeated failure to insist upon compliance with the terms of the Contract Documents, constitute the waiver or modification of any such terms. The parties acknowledge that no person has authority to modify this Agreement or the other Contract Documents or to waive any of its or their terms, except as expressly provided in this Paragraph.

13.2 ASSIGNMENT. The Contractor may not assign this Agreement without the written consent of the Owner, which the Owner may withhold in its sole discretion.

13.3 THIRD PARTIES. Nothing contained in this Agreement shall create a contractual relationship with or a cause of action in favor of a third party against either the Owner or the Contractor.

13.4 LAW AND JURISDICTION. All questions regarding the validity, intention, or meaning of this Agreement or any modifications of it relating to the rights and obligations of the parties shall be construed and resolved under the laws of the State of Ohio. Any suit, which may be brought to enforce any provision of this Agreement or any remedy with respect hereto, shall be brought in the Common Pleas Court of Franklin County, Ohio, and each party hereby expressly consents to the jurisdiction of such court.

13.5 STATUTE OF LIMITATIONS. Regardless of any provision to the contrary, the statute of limitations with respect to any defective or non-conforming Work that is not discovered by the Owner shall not commence until the discovery of such defective or non-conforming Work by the Owner.

13.6 NOTICES. Notices, requests, or demands by either party shall be in writing, unless otherwise expressly authorized, and shall be personally served, forwarded by expedited messenger service, sent by facsimile transmission, or be given by registered or certified mail, return receipt requested, postage prepaid, and, in the case of the Owner, addressed to the address/FAX number set forth at the beginning of this Agreement marked "Urgent, deliver to Owner's Representative/Designee," and, in the case of the Contractor, addressed to its address/FAX number set forth at the beginning of this Agreement. Any party may change its address/FAX number by giving notice hereunder. All notices, requests, and demands shall be deemed received upon receipt in the case of personal delivery or delivery by expedited messenger service, including leaving the notice at the address provided herein during normal business hours; upon the expiration of forty-eight (48) hours from the time of deposit in the United States mail; or, in the case of a notice given by facsimile transmission, upon the expiration of twenty-four (24) hours after the transmission is sent.

13.7 CONSTRUCTION. The parties acknowledge that each party has reviewed this Agreement and the other Contract Documents and has voluntarily entered into this Agreement. Accordingly, the normal rule of construction to the effect that any ambiguities are to be resolved against the drafting party shall not be employed in the interpretation of this Agreement, the other Contract Documents, or any amendments or exhibits to it or them.

13.8 APPROVALS. Except as expressly provided herein, the approvals and determinations of the Owner shall be subject to the sole discretion of the Owner and will be valid and binding on the Contractor, provided only that they be made in good faith, i.e., honestly. If the Contractor challenges

any such approval or determination, the Contractor shall have the burden of proving by clear and convincing evidence that it was not made in good faith.

13.9 PARTIAL INVALIDITY. If any term or provision of this Agreement is found to be illegal, unenforceable, or in violation of any laws, statutes, ordinances, or regulations of any public authority having jurisdiction, then, notwithstanding such term or provision, this Agreement shall remain in full force and effect, and such term shall be deemed stricken; provided this Agreement shall be interpreted, when possible, so as to reflect the intentions of the parties as indicated by any such stricken term or provision.

13.10 COMPLIANCE WITH LAWS AND REGULATIONS. The Contractor, at its expense, shall comply with all applicable federal, state, and local laws, rules, and regulations applicable to the Work. Including, but not limited to Ohio's Prevailing Wage law if applicable.

13.11 PROJECT SAFETY. The Contractor shall follow all applicable safety and health regulations during the progress of the Project and shall monitor all of its employees and its subcontractors for compliance with such safety and health regulations. In undertaking the responsibilities set forth in this Paragraph, the Contractor does not assume any duty or responsibility to the employees of any Subcontractor or supplier, regardless of tier. The Owner assumes no responsibility for the development, review, or implementation of any project safety plan or for Project safety and has no authority to direct the means and methods of the Contractor.

13.12 EQUAL OPPORTUNITY. Contractor agrees that, in the hiring of employees for the performance of work under the Contract or any subcontract, no contractor, subcontractor, or any person acting on a contractor's or subcontractor's behalf, by reason of race, creed, sex, disability or military status as defined in section 4112.01 of the Revised Code, or color, shall discriminate against any citizen of the state in the employment of labor or workers who is qualified and available to perform the work to which the employment relates. Contractor further agrees that neither it, its subcontractors, or any person on the Contractor's or subcontractor's behalf, in any manner, shall discriminate against or intimidate any employee hired for the performance of work under the contract on account of race, creed, sex, disability or military status as defined in section 4112.01 of the Revised Code, or color. That there shall be deducted from the amount payable to the Contractor by the Owner under this Agreement a forfeiture of twenty-five dollars ($25.00) as required by O.R.C. Section 153.60 for each person who is discriminated against or intimidated in violation of this Agreement. That this Agreement may be canceled or terminated by the Owner and all money to become due hereunder may be forfeited for a second or subsequent violation of the terms of this section of this Agreement.

13.13 USE OF OWNER'S FACILITIES. The Contractor shall ensure that neither its employees, nor its Subcontractor's or material supplier's employees, regardless of tier, do any of the following without the express prior written consent of the Owner: use the Owner's cafeteria, rest rooms, or phones; use or bring any alcoholic beverages, controlled substances, or firearms on any property owned by the Owner. The Owner will not tolerate any such actions and any such action observed or made known to the Owner shall be dealt with severely.

13.14 ETHICS. By signing and entering into this agreement with the Owner, the Contractor represents that it is familiar with all applicable ethics law requirements, including without limitation Sections 102.04 and 3517.13 of the O.R.C., and certifies that it is in compliance with such requirements. The Contractor understands that failure to comply with the ethics laws is, in itself, grounds for termination of this contract and may result in the loss of other contracts with the Owner.

13.15 PROPERTY TAX AFFIDAVIT. The Contractor's affidavit given under ORC Section 5719.024 is incorporated herein.

13.16 ENTIRE AGREEMENT. This Agreement and the other Contract Documents constitute the entire agreement among the parties with respect to their subject matter and will supersede all prior and contemporaneous, oral or written, agreements, negotiations, communications, representations, and understandings with respect to such subject matter, and no person is justified in relying on such agreements, negotiations, communications, representations, or understandings.

CITY OF DUBLIN, OHIO

By: _____ By: _____

Its: _____ Its: _____

Date: _____ Date: _____

APPROVED AS TO FORM:

_____ Date: _____

CITY OF DUBLIN, CITY ATTORNEY

CERTIFICATE OF AVAILABILITY OF FUNDS

I Angel Mumma, hereby certify that I am the fiscal officer for the CITY OF DUBLIN, OHIO and that the amount of money to wit $ required to meet the cost of the attached Contract between the City and has been or will be, before the ordering of any materials, lawfully appropriated for the purpose of said Contract and the money so appropriated is on deposit or in process of collection to the credit of the appropriate fund free from any previous encumbrances. Moneys due in excess of the Contract Sum and any Contingency amount assigned thereto shall require an additional and separate Fiscal Officer's Statement of Availability which shall not be given unless the Contract adjustment is directly attributable to one of the express methods for increasing the Contract Sum under the Contract Documents; and, such process is completed in the manner required by the Contract Documents.

_____ _____

Date Angel L. Mumma, Finance Director

B. CITY OF DUBLIN GENERAL CONDITIONS DIVISION 100

City of Dublin Division of Engineering General Condition Division 100 can always be found at:

http://dublinohiousa.gov/dev/dev/wp-content/uploads/2013/02/City-of-Dublin-General-Conditions-Section-100.pdf

The General Condition Division 100 will also be posted with the project on the City of Dublin's website where the project documents are available for download.

C. SUPPLEMENTAL GENERAL CONDITIONS

THERE ARE NO SUPPLEMENTAL GENERAL CONDITIONS FOR THE CITY OF DUBLIN, CHURCHMAN ROAD – PHASE 2 PROJECT.

D. PROPOSAL NOTES

Proposal Notes

CONTRACT SPECIFICATIONS

All contract specifications in this section are to be considered a part thereof.

MAINTENANCE OF TRAFFIC, AS PER PLAN

MOT shall be per the approved plans unless otherwise approved by the City Engineer. The MOT shall also meet the following criteria:

- The duration of the Rings Road detour shall be limited to a maximum of 8 weeks, unless a written request has been submitted to the City Engineer and approved. The detour may be implemented on or after June 6, 2016 and shall end no later than August 1, 2016.
- From June 3 through June 9, 2016, full access shall be maintained to the Northwest Chapel Grace Brethren Church. After June 9, 2016 one drive may be closed at a time for construction. The Contractor shall be responsible for coordinating drive closures with the Church Administrator.

WORKING HOURS

The Contractor is permitted to work between 7:00 A.M. and 7:00 P.M., Monday through Saturday. Permission to work on Sunday and holidays must be requested in writing and approved by the City Engineer.

STAGING AREA

The City of Dublin owns Reserve "D" of The Links at Ballantrae on the west side of Churchman Road and north of Rings Road. The Contractor may use this reserve area for their staging purposes. Upon completion, the Contractor restore with grading, seeding and mulching to the satisfaction of the City Engineer. The Contractor shall perform all restoration at his expense. Work close to existing trees shall require the installation of tree protection fencing at the direction of the Engineer.

Figure 1. Staging Area Details

GEOTECHNICAL INFORMATION

The subsurface exploration report is included in the bid documents.

TEST HOLES

The Contractor is encouraged to dig test holes at the project site prior to making their bid to familiarize themselves with site subsurface conditions. The bidder shall take into account any difficulty they perceive in constructing the project due to rock, ground water, weak soils, topsoil, etc.

INSPECTION

All other inspections shall be provided by the City of Dublin.

COORDINATION

Contractor shall coordinate his work to facilitate work by others in the right-of-way and outside of the construction work limits.

COORDINATING WITH UTILITIES

It is the Contractor's responsibility to coordinate their work with the private utilities as required. The utility owner may be required to brace, temporarily support, or relocate their respective utilities so that the proposed roadway can be constructed.

PROPOSAL

No extra compensation will be paid to the Contractor by reason of compliance with any of the requirements indicated in the Specifications, but payment shall be deemed to be included among the several items, as bid upon, unless otherwise specifically provided.

CONSTRUCTION LAYOUT

All construction layout stakes for this roadway project shall be provided by the Contractor. All work shall be performed by and under the guidance of a Professional Surveyor currently licensed in the State of Ohio.

ITEM 203 EXCAVATION
ITEM 203 EMBANKMENT

All excavation shall be considered as unclassified, including rock.

DEWATERING

The cost of any dewatering operations required for the construction of the storm sewers, water quality units, culverts, waterlines, underground ducts and/or conduits shall be included in the price bid for the various items.

CONDUIT END TREATMENT

Within seventy-two (72) hours after placement of any conduits, the Contractor shall have all necessary materials and construct the end treatments required by the plans at both the outlet and inlet ends. This shall include headwalls, flared end sections, riprap, rock channel protection, seeding, etc.

STORAGE OF EQUIPMENT AND MATERIALS

No materials, including pipe, shall be stored within thirty (30) feet of any intersecting street or driveway or property line. During non-working hours, storage of equipment shall comply with these same requirements and shall not in any way relieve the Contractor of their legal responsibilities or liabilities for the safety of the public.

CONSTRUCTION MATERIALS

No alternates or deviations shall be permitted from those construction materials shown the plans except those items identified as alternate bid items.

SURVEY MONUMENTATION

The contractor shall carefully preserve bench marks, property corners, reference points, stakes and other survey reference monuments or markers. In cases of willful or careless destruction, the contractor shall be responsible. Resetting of markers shall be performed by an Ohio Professional Surveyor as approved by the City Engineer at the contractor's expense.

CONSTRUCTION NOISE

Any device shall not be operated at any time in such a manner that the noise created substantially exceeds the noise customarily and necessarily attendant to the reasonable and efficient performance of such equipment.

COUNCIL RESOLUTION

This project is scheduled to come before City Council for bid acceptance on Monday, April 25, 2016.

STREET LIGHTING

The contractor shall submit shop drawings and specifications for the street light poles and appurtenances within two (2) weeks after the Notice to Proceed is authorized. Shop drawings and specification approval by the City of Dublin is required before fabrication. The contractor shall order the street light poles and appurtenances immediately thereafter so as not to delay the completion of the project.

COMPLETION

The completion dates for this project are:

Interim Completion Date, August 12, 2016

Interim completion shall be defined as the roundabout open to east / west traffic prior to the start of the 2016-2017 school year. This requires the substantial completion of the circulatory roadway along with the east and west legs of the roundabout. The first day of school for the Hilliard City School District is August 17, 2016. Interim completion shall include:

- All curb-and-gutter, straight curb, mountable curb
- Splitter island brick banding & truck apron
- All storm sewer and waterline work along Rings Road
- Curb ramps and detectable warning panels
- Intermediate asphalt

- Temporary pavement markings
- Traffic control signing
- Hardscape

Final Completion Date, October 28, 2016.
Should the Contractor fail to meet the final completion date, liquidated damages will be assessed according to Section 108.07 of the General Conditions for each day.

- Final completion includes the remainder of the project.

E. GEOTECHNICAL SPECIFICATIONS

GEOTECHNICAL
CONSULTANTS INC.

GCI PROJECT No: 14-G-18025

Subsurface Exploration and Geotechnical Engineering Report

Churchman Road Connector
Rings Road to Cosgray Road
Dublin, Ohio

Prepared for:
American Structurepoint, Inc.

March 25, 2014

GEOTECHNICAL
CONSULTANTS INC.

MAIN OFFICE
720 Greencrest Drive 614.895.1400 phone
Westerville, OH 43081 614.895.1171 fax

YOUNGSTOWN OFFICE
8433 South Avenue 330.965.1400 phone
Bldg 1, Suite 1 330.965.1410 fax
Boardman, OH 44514

www.gci2000.com

March 25, 2014

Mr. Shawn Goodwin, P.E.
American Structurepoint, Inc.
2550 Corporate Exchange Drive, Suite 300
Columbus, Ohio 43231

Reference: Subsurface Exploration and Geotechnical Engineering Report
Churchman Road Connector Project
Rings Road to Cosgray Road - Dublin, Ohio
GCI Project No. 14-G-18025

Dear Mr. Goodwin:

Geotechnical Consultants, Inc. performed a subsurface exploration and prepared this geotechnical engineering report for the above referenced project. The purpose of this exploration was to determine existing pavement thickness (at proposed roundabouts), assess subsurface conditions below existing pavement areas and in new pavement areas, and provide design parameters for the anticipated new pavement sections. We feel that the primary geotechnical consideration for the project will be stabilization of roadway subgrade soils where softer soils are encountered during construction. We provide our subsurface findings, laboratory test results, and recommendations for subgrade preparation within the report text. We also provide an opinion as to the amount of traffic that the client proposed pavement section will support based on our lab testing.

After you review the report, feel free to contact GCI with any questions you may have. GCI appreciates the opportunity to provide our services for this project, and we hope to continue providing service through construction.

Sincerely,
Geotechnical Consultants, Inc.

STATE OF OHIO
CURTIS L. MILLER
E-56404
REGISTERED
PROFESSIONAL ENGINEER
3/25/14

Curtis L. Miller, P.E.
Principal

Todd R. Meek, P.E., LEED AP
In-House Reviewer

Distribution: Mr. Shawn Goodwin @ American Structurepoint – 1 bound, pdf via email
GCI File – 1 copy

TABLE OF CONTENTS

INTRODUCTION 1

SITE LOCATION AND PROJECT DESCRIPTION 2

SUBSURFACE CONDITIONS 3

LABORATORY TESTING 5

CONCLUSIONS AND RECOMMENDATIONS 6

GENERAL
ROADWAY SUBGRADE PREPRATION
PAVEMENT SECTION AND CBR VALUES
EXCAVATIONS
GROUNDWATER
STRUCTURAL FILL

CONSTRUCTION MATERIALS ENGINEERING AND TESTING 9

FINAL 10

APPENDIX FOLLOWING PAGE NUMBER 10

General Notes for Soil Sampling and Classifications
General Site Location Map (DeLorme Street Atlas USA – 2014)
Boring Location Plan
Summary of Encountered Subsurface Conditions
Test Boring Logs (B-1 to B-8 and C-1 to C-4)
Laboratory Test Results

INTRODUCTION

As requested and authorized by Mr. Shawn Goodwin, P.E. on behalf of American Structurepoint, Inc., Geotechnical Consultants, Inc. (GCI) has performed a subsurface exploration and prepared this geotechnical engineering report for the proposed Churchman Road Connector project in Dublin, Ohio. Prior to drilling, the client provided GCI with a plan showing the proposed roadway layout on an aerial photograph showing existing site conditions.

Our study consisted of eight (8) standard penetration test borings along the proposed roadway alignment, four (4) cores within existing pavement at the proposed roundabouts, laboratory soil testing, and walk-over site observations. A boring location plan, copies of the boring logs, a summary of encountered conditions table, and laboratory test results are included in the appendix. GCI located the borings using the site layout plan and existing site landmarks.

The intent of this exploration is to evaluate subsoil conditions and offer geotechnical recommendations relative to subgrade preparation and to assess the suitability of the proposed pavement design for the proposed roadway project. GCI should review final plans when available, and provide additional recommendations and borings, as necessary.

This report has been prepared for the exclusive use of American Structurepoint, Inc. and their consultants for specific application to the referenced Churchman Road Connector project in Dublin, Ohio in accordance with generally accepted soil and foundation engineering practices. No warranty, expressed or implied, is made.

SITE LOCATION AND PROJECT DESCRIPTION

The project is located on the west side of Dublin, Ohio and will extend between Cosgray Road and Rings Road. The general site location is shown on the attached street map (DeLorme® Street Atlas 2014). The roadway crosses through mostly open farm field, with some tree lines noted. The aerial below, and the attached Boring Location Plan, shows the general project layout.

Aerial Photograph of Site (source: Google.com)

We understand the proposed project will include installation of about 3,700 lineal feet of new roadway that will connect Rings Road to Cosgray Road. There will be new roundabouts at the connection points. We do not anticipate grades will change significantly since the site is relatively flat and level and existing construction surrounds the roadways.

SUBSURFACE CONDITIONS

GCI mobilized truck-mounted and rubber tired ATV-mounted, rotary drill rigs (with automatic sampling hammers) to the site on March 7 and 10, 2014. We drilled eight (8) standard penetration borings (B-1 to B-8) along the proposed roadway alignment to obtain a generalized profile of existing subsurface conditions. We also performed four (4) cores (C-1 to C-4) within the existing roadways at the proposed connector points. We used a mix of standard and continuous split-spoon sampling techniques to advance the borings to 10 feet below the present ground surface.

We have included copies of the boring logs and a boring location plan in the appendix. We summarize the subsurface findings below as well as in a table included in the appendix. Please refer to the individual boring logs for more detailed subsurface information at specific boring locations.

Surface Cover

Core borings C-1 to C-4 encountered surface pavement consisting of 12 to 12.5 inches of asphalt overlying 5 to 10 inches of aggregate base.

Below the pavement in C-1 to C-4 and at the surface of B-8, we encountered fill materials consisting of mixtures of lean clay, sand, gravel, and trace to little topsoil. We note that the fill in C-4 consisted mostly of topsoil or heavily stained clays. The fill in B-8 was noted as stiff in cohesive consistency. The fill extended to depths ranging from 2.3 to 4 feet below existing grades.

Borings B-1 to B-7 encountered stained natural soils at the surface. A true topsoil was not noted by the drillers and this is attributed to the agricultural use of the land.

Natural Soils

Below the fill in C-1 to C-4 and B-8, and at the surface of B-1 to B-7, we encountered natural soils consisting of moderately plastic, medium stiff to stiff, brown mottled gray lean clay (classified as CL in the Unified/ASTM Soils Classification System). The mottled lean clay extended to depths of 2 feet to 7 feet below grade.

Below the mottled lean clay, we encountered moderately plastic, medium stiff to very stiff, brown glacial till, consisting of lean clay with sand (CL). We noted varying amounts of embedded sand and gravel, as well as random silty sand and gravel layers within the till. We terminated borings B-6 to B-8 and C-1 to C-4 within the brown till soils at 10 feet below existing grades.

Below the brown till in borings B-1 to B-5, at depths of 9 to 9.5 feet below grade, we encountered very stiff gray glacial till consisting of sandy lean clay with gravel (CL). This soil was low to moderately plastic and contained random silty sand and gravel layers. Borings B-1 to B-5 terminated within the gray till soils at 10 feet below grade.

Bedrock

We did not encounter bedrock within the maximum drilled depths of our borings (10 feet).

Groundwater

We encountered water seepage in borings B-4, B-5, C-1, C-2, and C-3, at respective

depths of 5, 5, 8, 8, and 10 feet below grade during drilling. By completion of drilling procedures the water levels had not changed in C-1 to C-3, had dropped to 9 feet in B-4, and had dissipated in B-5. We did not encounter water seepage in the other borings. Note that groundwater levels and moisture conditions can vary with changes in season and in response to precipitation events.

The drillers noted the retrieved samples were generally moist to very moist, with some wet samples noted near sand and gravel layers and seepage zones.

LABORATORY TESTING

GCI determined the natural moisture content of split spoon samples obtained from borings B-1, B-2, B-3, B-5, B-6, and B-7. We also performed index testing (sieve/ hydrometer and Atterberg Limits analyses) on the 2-foot and 4-foot deep split spoon samples from borings B-2 and B-6, as well as from a bulk bag sample obtained from within the upper 5 feet of boring B-7. The purpose of the testing was to refine the visual soil classifications. We also performed Standard Proctor and California Bearing Ratio (CBR) testing on the bulk sample from boring B-7; these soils would be representative of the proposed pavement subgrades. The results of these tests are used in assessing the suitability of the proposed pavement design. Test results are included in the appendix and have been incorporated into the attached boring logs.

The natural moisture content testing showed the natural soils at the time of this study were generally over optimum moisture in the upper 2 to 3 feet, becoming closer to optimum moisture content with depth.

Atterberg limit testing of the cohesive soils showed liquid limits of 27% to 40% and plastic limits of 17% to 19% for site soils, resulting in plastic indices of 10% and 21%. The tested samples were classified as lean clay with sand (CL) and sandy lean clay (CL) in the Unified/ASTM Soils Classification System.

Standard Proctor testing of the B-7 sample yielded a maximum dry density of 108.4 pounds per cubic foot (pcf), with an optimum moisture content of 17.8%. When compared to the in-situ moisture content, the soils at B-7 were about 6% over the optimum moisture content at the time of drilling. California Bearing Ratio (CBR) testing resulted in a value of 4.6, with volume change measurements of 0.9% after soaking in water for 96 hours.

CONCLUSIONS AND RECOMMENDATIONS

GENERAL

The project consists of constructing a connector roadway between Rings Road and Cosgray Road in Dublin, Ohio. The roadway will connect to the existing roads with roundabouts. Based on the findings of our borings, we conclude that the encountered subsurface soils are suitable to support the anticipated roadway with proper site preparation. The primary geotechnical consideration will be properly stabilizing roadway subgrade soils where soft or wet conditions are encountered during construction.

ROADWAY SUBGRADE PREPARATION

We recommend in areas where existing pavement will be removed that the existing pavement section be completely removed to expose stable soil subgrades. New roadway subgrades should be cleared in accordance with ODOT Item 201 – *Clearing and Grubbing* and any structures removed in accordance with ODOT Item 202 – *Removal of*

Structures and Obstructions. Earthwork should be performed in accordance with ODOT Item 203 – *Roadway Excavation and Embankment.*

Based on the borings, we anticipate most of the new pavement alignment subgrades will consist of stained natural lean clay soils. If the existing pavement is removed at the roundabout areas, the subgrade will consist of existing fill. Remove organic fills (see boring C-4). The exposed subgrades should be proof rolled and stabilized in accordance with ODOT Item 204 – *Subgrade Compaction and Proof Rolling.* If subgrades are stable, no stabilization is needed. Soft/unstable areas encountered during proofrolling should be brought to a firm and stable condition prior to fill and aggregate placement. Under favorable drying conditions (late spring, summer and early fall), a subgrade stabilization program consisting of disking of the soils to enhance air drying followed by recommended compaction is expected to be sufficient. Deeper soft soil conditions may require undercuts or more extensive means of stabilization, and should be reviewed by GCI in the field prior to remediation.

During wet seasons (late fall, winter and early spring) air-drying may not be practical, and undercuts backfilled with structural fill (including stone and geogrid) or the use of lime or lime-fly ash is expected to be required to complete subgrade stabilization. The use of lime/fly-ash or other means of stabilization beyond air-drying should be reviewed by our office prior to use. Careful routing of construction traffic is advised to help minimize pumping of the near-surface very moist, clayey soils. Once the subgrade is stable, place and compact required fill to design subgrades.

New fill should be free of organics, cobbles, boulders, and miscellaneous debris. The fill should be placed in loose lifts not exceeding 8 inches thick and compacted in accordance with ODOT Item 203 – *Roadway Excavation and Embankment* and ODOT Item 204 – *Subgrade Compaction and Proof Rolling.*

We recommend that GCI review potential borrow sources prior to use. The existing base course aggregate and existing asphalt properly ground to a well-graded condition can be reused for structural fill. The feasibility of reusing existing stone for new pavement sections depends on if the existing stone is contaminated by fine-grained soil.

PAVEMENT SECTION AND CBR VALUES

American Structurepoint, Inc. indicated the new pavement section will consist of 9 inches of asphalt (1.25" surface asphalt over 1.75" intermediate asphalt over 6" base asphalt) over 6 inches of aggregate base, which results in a Structural Number (SN) of 4.29. **Care should be taken to maintain positive base course drainage, particularly where new pavement sections meet existing pavement.** Our laboratory testing resulted in a CBR value for the existing subgrade of 4.6.

Analysis suggests that the proposed pavement section (SN = 4.29), placed on top of a stable subgrade should theoretically support 160 fully loaded semi-trucks per day for a 20 year design period.

EXCAVATIONS

Conventional track-hoe equipment should be able to excavate the site soils. If new utilities are planned, care should be taken to assure excavation bottoms are firm and

stable prior to placing bedding materials and utilities. Contact GCI for additional recommendations if unstable subgrades are encountered, which may require undercuts and thicker bedding to provide adequate support.

GROUNDWATER

We encountered water seepage at 5 feet in B-4 and B-5 (roadway borings) and at 8 to 10 feet in C-1, C-2, and C-3 (roundabout area borings). We did not encounter water seepage in the remaining borings. If water is encountered in site excavations, the excavations should be dewatered to allow construction and utility trench backfilling in "dry" conditions. We expect seepage can be handled with portable sump pumps and working mats of crushed stone.

STRUCTURAL FILL

New structural fill should be placed in 8 inch loose lifts and compacted to a minimum of 98% Standard Proctor dry density. The excavated non-organic clay-based soils and granular soils should be suitable for reuse as structural fill. Some moisture conditioning (principally drying of the excavated soils) will be necessary to achieve proper compaction. Any existing topsoil and organic fill material is not recommended for structural fill.

CONSTRUCTION MATERIALS ENGINEERING AND TESTING

GCI provides construction materials engineering and testing services. For project continuity throughout construction, we recommend that GCI be retained to observe, test, and document:

- earthwork procedures (stripping, fill placement, compaction, utility trench backfill, etc.),
- pavement subgrade preparation (proof-rolling, excavations, undercuts, etc.), and
- pavement installation.

The purpose of this work is to assess that the intent of our recommendations is being followed and to make timely changes to our recommendations (as needed) in the event site conditions vary from those encountered in our borings. Please contact our field department to initiate these services.

FINAL

We recommend that GCI review final site layout and grading plans. Recommendations contained in this report may be changed based on this review. If any changes in the nature, design or locations of the construction are planned, conclusions and recommendations should not be considered valid unless verified in writing by GCI.

The recommendations contained in this report are the opinion of GCI based on the subsurface conditions found in the borings and available project information. This report has been issued to the client for design purposes. It should be noted that the nature and extent of variations between borings might not become evident until construction. If variations then appear evident, it will be necessary to re-evaluate the recommendations of this report. This report has been prepared for design purposes only and should not be considered sufficient to prepare an accurate bid document.

If you have any questions or need for any additional information, please contact our office. It has been a pleasure to be of service to you on this project, and we hope to continue our services through construction.

GEOTECHNICAL
CONSULTANTS INC.

APPENDIX – Churchman Road Connector Project

General Notes for Soil Sampling and Classifications
General Site Location Map (DeLorme Maps – 2014)
Boring Location Plan
Summary of Encountered Subsurface Conditions
Test Boring Logs (B-1 to B-8 and C-1 to C-4)
Laboratory Test Results

GEOTECHNICAL CONSULTANTS INC.

MAIN OFFICE
720 Greencrest Drive 614.895.1400 phone
Westerville, OH 43081 614.895.1171 fax

YOUNGSTOWN OFFICE
8433 South Avenue 330.965.1400 phone
Bldg 1, Suite 1 330.965.1410 fax
Boardman, OH 44514

www.gcl2000.com

GENERAL NOTES FOR SOIL SAMPLING AND CLASSIFICATIONS

BORINGS, SAMPLING AND GROUNDWATER OBSERVATIONS:

Drilling and sampling were conducted in accordance with procedures generally recognized and accepted as standard methods of exploration of subsurface conditions. The borings were drilled using a truck-mounted drill rig using auger boring methods with standard penetration testing performed in each boring at intervals ranging from 1.5 to 5.0 feet. The stratification lines on the logs represent the approximate boundary between soil types at that specific location and the transition may be gradual.

Water levels were measured at drill locations under conditions stated on the logs. This data has been reviewed and interpretations made in the text of the report. Fluctuations in the level of the groundwater may occur due to other factors than those present at the time the measurements were made.

The Standard Penetration Test (ASTM-D-1586) is performed by driving a 2.0 inch O.D. split barrel sampler a distance of 18 inches utilizing a 140 pound hammer free falling 30 inches. The number of blows required to drive the sampler each 6 inches of penetration are recorded. The summation of the blows required to drive the sampler for the final 12 inches of penetration is termed the Standard Penetration Resistance (N). Soil density/consistency in terms of the N-value is as follows:

COHESIONLESS DENSITY		COHESIVE CONSISTENCY	
0-10	Loose	0-4	Soft
10-30	Medium Dense	4-8	Medium Stiff
30-50	Dense	8-15	Stiff
50 +	Very Dense	15-30	Very Stiff
		30 +	Hard

SOIL MOISTURE TERMS

Soil Samples obtained during the drilling process are visually characterized for moisture content as follows:

MOISTURE CONTENT	DESCRIPTION
Damp	Soil moisture is much drier than the Atterberg plastic limit (where soils are cohesive) and generally more than 3% below Standard Proctor "optimum" moisture conditions. Soils of this moisture generally require added moisture to achieve proper compaction.
Moist	Soil moisture is near the Atterberg plastic limit (cohesive soils) and generally within ±3% of the Standard Proctor "optimum" moisture content. Little to no moisture conditioning is anticipated to be required to achieve proper compaction and stable subgrades.
Very Moist	Soil moisture conditions are above the Atterberg plastic limit (cohesive soils) and generally greater than 3% above Standard Proctor "optimum" moisture conditions. Drying of the soils to near "optimum" conditions is anticipated to achieve proper compaction and stable subgrades.
Wet	Soils are saturated. Significant drying of soils is anticipated to achieve proper compaction and stable subgrades.

SOIL CLASSIFICATION PROCEDURE:

Soil samples obtained during the drilling process are preserved in plastic bags and visually classified in the laboratory. Select soil samples may be subjected to laboratory testing to determine natural moisture content, gradation, Atterberg limits and unit weight. Soil classifications on logs may be adjusted based on results of laboratory testing.

Soils are classified in accordance with the ASTM version of the Unified Soil Classification System. ASTM D-2487 "Classification of Soils for Engineering Purposes (Unified Soil Classification System) describes a system for classifying soils based on laboratory testing. ASTM D-2488 "Description and Identification of Soil (Visual-Manual Procedure) describes a system for classifying soils based on visual examination and manual tests.

Soil classifications are based on the following tables (see reverse side):

GENERAL NOTES FOR SOIL SAMPLING AND CLASSIFICATIONS

PARTICLE SIZE DEFINITION			CONSTITUENT MODIFIERS	
Boulders:		>12"		
Cobbles:		3" to 12"	Trace	Less than 5%
Gravel:	Coarse:	3/4" to 3"	Few	5-10%
	Fine:	No. 4 (3/16") to 3/4"	Little	15-25%
Sand:	Coarse	No. 10 (2.0mm) to No. 4 (4.75mm)	Some	30-45%
	Medium	No. 40 (0.425mm) to No. 10 (2.0mm)	Mostly	50-100%
	Fine	No. 200 (0.074mm) to No. 40 (0.425mm)		
Silt & Clay		<0.074mm; classification based on overall plasticity; in general clay particles <0.005mm.		

ASTM/UNIFIED SOIL CLASSIFICATION AND SYMBOL CHART		
COARSE-GRAINED SOILS (more than 50% of materials is larger than No. 200 sieve size)		
GRAVELS More than 50% of coarse fraction larger than No. 4 sieve size		*Clean Gravel (less than 5% fines)*
	GW	Well-graded gravel, gravel-sand mixtures, little or no fines
	GP	Poorly-graded gravels, gravel sand mixtures, little or no fines
		Gravels with fines (more than 12% fines)
	GM	Silty gravels, gravel-sand-silt mixtures
	GC	Clayey gravels, gravel-sand-clay mixtures
SANDS More than 50% of coarse fraction smaller than No. 4 sieve size		*Clean Sands (Less than 5% fines)*
	SW	Well-graded sands, gravelly sands, little or no fines
	SP	Poorly-graded sands, gravelly sands, little or no fines
		Sands with fines (More than 12% fines)
	SM	Silty sands, sand-silt mixtures
	SC	Clayey sands, sand-clay mixtures
Depending on percentage of fines (fraction smaller than No. 200 sieve size), coarse-grained soils are classified as follows:		
Less than 5 percent ..... GW, GP, SW, SP		
Greater than 12 percent ..... GM, GC, SM, SC		
5 to 12 percent ..... Borderline cases requiring duel symbols: SP-SM, GP-GM, etc.		
FINE-GRAINED SOILS (50% or more of material is smaller than No. 200 sieve size)		
SILTS AND CLAYS Liquid Limit less than 50%	ML	Inorganic silts and very fine sands, rock flour, silty or clayey fine sands or clayey silts with slight plasticity
	CL	Inorganic clays or low to medium plasticity, gravelly clays, sandy clays, silty clays, lean clays
	CL-ML	Inorganic silty clay of slight plasticity, P.I. between 4 and 7
	OL	Organic silts and organic silty clays of low plasticity
SILTS AND CLAYS Liquid Limit 50% or greater	MH	Inorganic silts, micaceous or diatomaceous fine sandy or silty soils, elastic silts
	CH	Inorganic clays of high plasticity, fat clays
	OH	Organic clays or medium to high plasticity, organic silts
HIGHLY ORGANIC SOILS	PT	Peat and other highly organic soils

DeLorme Street Atlas USA® 2014

GENERAL SITE LOCATION MAP

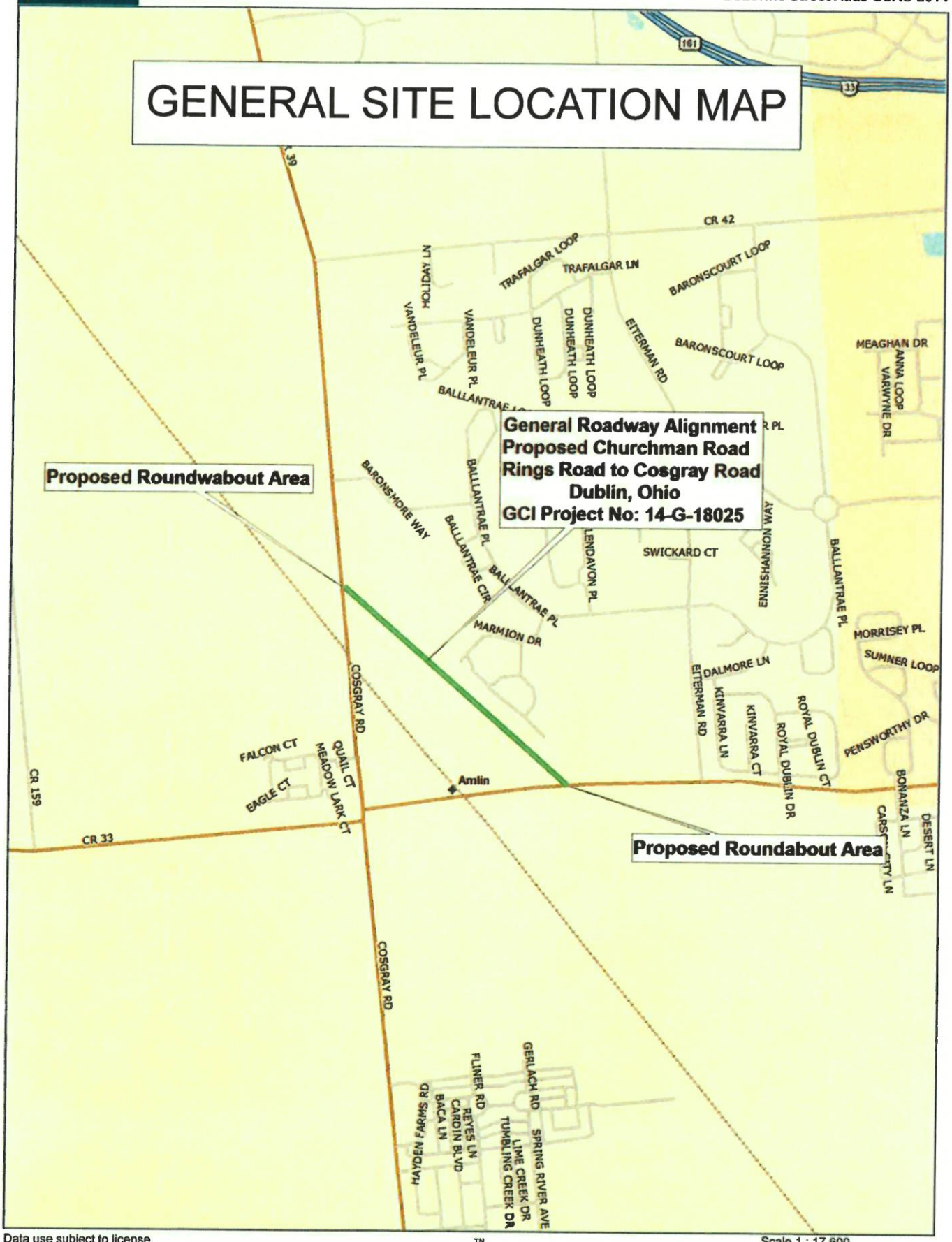

Data use subject to license.

© DeLorme. DeLorme Street Atlas USA® 2014.

www.delorme.com

TN

MN (6.9°W)

Scale 1 : 17,600

1" = 1,466.7 ft

Data Zoom 13-5

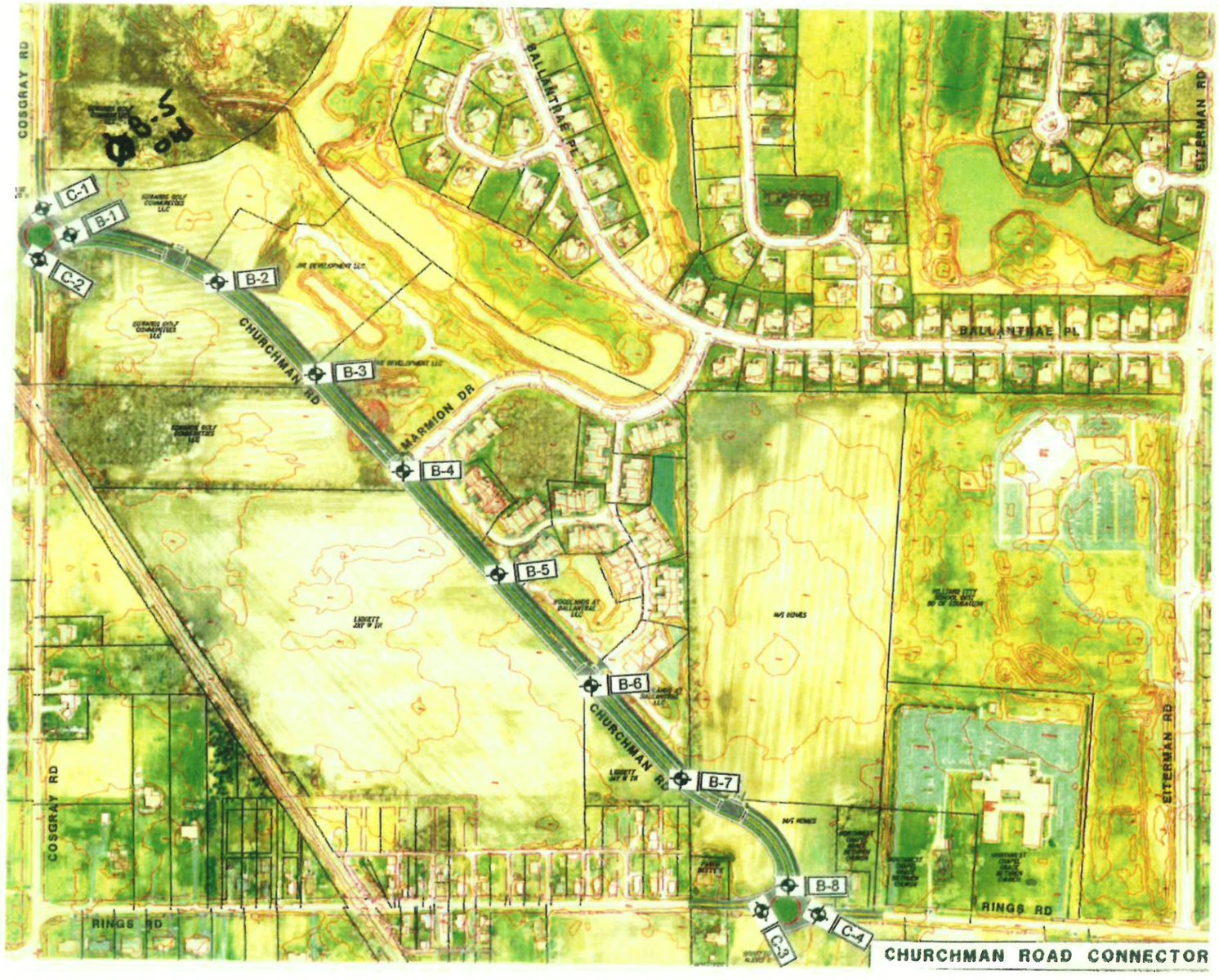

Approximate Boring Location

BORING LOCATION PLAN

Proposed Churchman Road Project

Rings Road to Cosgray Road - Dublin, Ohio

Base map provided by client	
Project No.: 14-G-18025	
Date: 3/11/14	Drawn By: clm
Scale: 1"=400' (approximate)	

Summary of Encountered Subsurface Conditions

Proposed Churchman Road Project
Rings Road and Cosgray Road - Dublin, Ohio
GCI Job Number: 14-G-18025

Borehole	Surface Layer	Pavement Thickness (inches)		Bottom of Fill Cover (feet)	Groundwater: Level Encountered (ft)	Groundwater: Level at Completion (ft)	Depth to Mottled Lean Clay (ft)	Depth to Brown Till (ft)	Depth to Gray Till (ft)	Bottom of Boring Depth (ft)
		Asphalt	Stone		Depth	Depth				
B- 1	Lean Clay	--	--	--	--	--	0.0	2.0	9.0	10.0
B- 2	Lean clay	--	--	--	--	--	0.0	4.0	9.5	10.0
B- 3	Lean Clay	--	--	--	--	--	0.0	5.0	9.0	10.0
B- 4	Lean Clay	--	--	--	5	9	0.0	3.0	9.0	10.0
B- 5	Lean Clay	--	--	--	5	--	0.0	2.0	9.0	10.0
B- 6	Lean Clay	--	--	--	--	--	0.0	4.5	--	10.0
B- 7	Lean Clay	--	--	--	--	--	0.0	6.5	--	10.0
B- 8	Fill	--	--	4.0	--	--	4.0	6.0	--	10.0
C- 1	Asphalt	12.5	9.5	2.5	8	8	2.5	7.0	--	10.0
C- 2	Asphalt	12	10	2.8	8	8	2.8	4.0	--	10.0
C- 3	Asphalt	12	10	2.8	10	10	2.8	6.0	--	10.0
C- 4	Asphalt	12	5	2.3	--	--	2.3	3.5	--	10.0

TEST BORING LOG

PROJECT NAME Proposed Churchman Road Project - Rings Road and Cosgray Road - Dublin, Ohio — BORING NO. C- 1

CLIENT American Structurepoint, Inc. — PROJ. NO. 14-G-18025 — SURF. ELEV. — DATE DRILLED 3/7/2014

GROUND WATER OBSERVATION

8.0 FEET BELOW SURFACE AT COMPLETION

____ FEET BELOW SURFACE AT 24 HOURS

____ FEET BELOW SURFACE AT ____ HOURS

Proportions Used

Trace	Less than 5%
Few	5 to 10%
Little	15 to 25%
Some	30 to 45%
Mostly	50 to 100%

140 lb Wt. x 30" fall on 2" O.D. Sampler

Cohesionless Density		Cohesive Consistency	
0 - 10	Loose	0 - 4	Soft
10 - 30	Medium Dense	4 - 8	Medium Stiff
30 - 50	Dense	8 - 15	Stiff
50 +	Very Dense	15 - 30	Very Stiff
		30 +	Hard

LOCATION OF BORING **See Boring Location Plan**

DEPTH	Pocket Penetrometer (tsf)	Sample Depths From To	Type of Sample	Blows per 6" on Sampler From To 0-6	6-12	12-18	Moisture Density or Consist.	Strata Change Depth*	SOIL IDENTIFICATION Remarks include color, type of soil, etc. Rock-color, type, condition, hardness
								1.1	12.5" Asphalt over 9.5" Aggregate Base
								1.8	
	3.5	2.0-4.0	SS	3	5	7	Very Moist	2.5	Fill consisting of a mixture of lean clay, sand, gravel, and trace to little topsoil
				10					Brown Mottled Gray Lean Clay (CL) - stained, moderately plastic
	2.5-3.0	4.0-6.0	SS	3	3	4	Very Moist		
5				5					
								7.0	
									Brown Lean Clay with Sand (CL) - moderately plastic, little fine to coarse sand, trace gravel (glacial till)
	--	8.5-10.0	SS	3	4	7	Wet		Water Seepage at 8'
10								10.0	
									BOTTOM OF BORING: 10'
15									

*** The stratification lines represent the approximate boundary between soil types and the transition may be gradual.**

720 Greencrest Drive • Westerville, Ohio 43081 • 614-895-1400

TEST BORING LOG

PROJECT NAME Proposed Churchman Road Project - Rings Road and Cosgray Road - Dublin, Ohio
BORING NO. C- 2
PROJ. NO. 14-G-18025
SURF. ELEV.
CLIENT American Structurepoint, Inc.
DATE DRILLED 3/7/2014

GROUND WATER OBSERVATION

8.0 FEET BELOW SURFACE AT COMPLETION
____ FEET BELOW SURFACE AT 24 HOURS
____ FEET BELOW SURFACE AT ____ HOURS

Proportions Used

Trace	Less than 5%
Few	5 to 10%
Little	15 to 25%
Some	30 to 45%
Mostly	50 to 100%

140 lb Wt. x 30" fall on 2" O.D. Sampler

Cohesionless Density		Cohesive Consistency	
0 - 10	Loose	0 - 4	Soft
10 - 30	Medium Dense	4 - 8	Medium Stiff
30 - 50	Dense	8 - 15	Stiff
50 +	Very Dense	15 - 30	Very Stiff
		30 +	Hard

LOCATION OF BORING **See Boring Location Plan**

DEPTH	Pocket Penetrometer (tsf)	Sample Depths From To	Type of Sample	Blows per 6" on Sampler From To 0-6	6-12	12-18	Moisture Density or Consist.	Strata Change Depth*	SOIL IDENTIFICATION Remarks include color, type of soil, etc. Rock-color, type, condition, hardness
								1.0	12" Asphalt over 10" Aggregate Base
								1.8	
	3.5	2.0-4.0	SS	3	4	5	Moist	2.8	Fill consisting of a mixture of lean clay, sand, gravel, and trace to little topsoil
				7				4.0	Brown Mottled Gray Lean Clay (CL) - stained, moderately plastic
	2.5-3.0	4.0-6.0	SS	3	4	5	Moist		Brown Lean Clay with Sand (CL) - moderately plastic, little fine to coarse sand, trace gravel (glacial till)
				6					
5									
	2	8.5-10.0	SS	4	5	5	Very Moist		Water Seepage at 8'
10								10.0	
									BOTTOM OF BORING: 10'
15									

*** The stratification lines represent the approximate boundary between soil types and the transition may be gradual.**

720 Greencrest Drive • Westerville, Ohio 43081 • 614-895-1400

TEST BORING LOG

PROJECT NAME Proposed Churchman Road Project - Rings Road and Cosgray Road - Dublin, Ohio
BORING NO. C- 3
PROJ. NO. 14-G-18025
SURF. ELEV.
CLIENT American Structurepoint, Inc.
DATE DRILLED 3/7/2014

GROUND WATER OBSERVATION

10.0 FEET BELOW SURFACE AT COMPLETION
____ FEET BELOW SURFACE AT 24 HOURS
____ FEET BELOW SURFACE AT ____ HOURS

Proportions Used

Trace	Less than 5%
Few	5 to 10%
Little	15 to 25%
Some	30 to 45%
Mostly	50 to 100%

140 lb Wt. x 30" fall on 2" O.D. Sampler

Cohesionless Density		Cohesive Consistency	
0 - 10	Loose	0 - 4	Soft
10 - 30	Medium Dense	4 - 8	Medium Stiff
30 - 50	Dense	8 - 15	Stiff
50 +	Very Dense	15 - 30	Very Stiff
		30 +	Hard

LOCATION OF BORING **See Boring Location Plan**

DEPTH	Pocket Penetrometer (tsf)	Sample Depths From To	Type of Sample	Blows per 6" on Sampler From To 0-6	6-12	12-18	Moisture Density or Consist.	Strata Change Depth*	SOIL IDENTIFICATION Remarks include color, type of soil, etc. Rock-color, type, condition, hardness
								1.0	12" Asphalt over 10" Aggregate Base
								1.8	
	4	2.0-4.0	SS	4 6	3	4	Moist	2.8	Fill consisting of a mixture of lean clay, sand, gravel, and trace to little topsoil
	3.5	4.0-6.0	SS	4 7	5	7	Moist	6.0	Brown Mottled Gray Lean Clay (CL) - stained, moderately plastic
5									
	4	8.5-10.0	SS	3	4	6	Moist	10.0	Brown Lean Clay with Sand (CL) - moderately plastic, little fine to coarse sand, trace gravel (glacial till); random silty sand and gravel layers noted Water Seepage at 10'
10									BOTTOM OF BORING: 10'
15									

* The stratification lines represent the approximate boundary between soil types and the transition may be gradual.

720 Greencrest Drive • Westerville, Ohio 43081 • 614-895-1400

TEST BORING LOG

PROJECT NAME Proposed Churchman Road Project - Rings Road and Cosgray Road - Dublin, Ohio
BORING NO. C- 4
PROJ. NO. 14-G-18025
SURF. ELEV.
CLIENT American Structurepoint, Inc.
DATE DRILLED 3/7/2014

GROUND WATER OBSERVATION

None FEET BELOW SURFACE AT COMPLETION
____ FEET BELOW SURFACE AT 24 HOURS
____ FEET BELOW SURFACE AT ____ HOURS

Proportions Used

Trace	Less than 5%
Few	5 to 10%
Little	15 to 25%
Some	30 to 45%
Mostly	50 to 100%

140 lb Wt. x 30" fall on 2" O.D. Sampler

Cohesionless Density		Cohesive Consistency	
0 - 10	Loose	0 - 4	Soft
10 - 30	Medium Dense	4 - 8	Medium Stiff
30 - 50	Dense	8 - 15	Stiff
50 +	Very Dense	15 - 30	Very Stiff
		30 +	Hard

LOCATION OF BORING **See Boring Location Plan**

DEPTH	Pocket Penetrometer (tsf)	Sample Depths From To	Type of Sample	Blows per 6" on Sampler From To 0-6	6-12	12-18	Moisture Density or Consist.	Strata Change Depth*	SOIL IDENTIFICATION Remarks include color, type of soil, etc. Rock-color, type, condition, hardness
								1.0	12" Asphalt over 5" Aggregate Base
								1.4	
	4.5	2.0-4.0	SS	3 6	4	5	Moist	2.3	Fill consisting of mostly topsoil, with minor amount of lean clay
								3.5	Brown Mottled Gray Lean Clay (CL) - stained, moderately plastic
	3.5-4.0	4.0-6.0	SS	3 6	5	5	Moist		Brown Lean Clay with Sand (CL) - moderately plastic, little fine to coarse sand, trace gravel (glacial till)
5									
	4	8.5-10.0	SS	3	4	5	Moist		
10								10.0	
									BOTTOM OF BORING: 10'
15									

*** The stratification lines represent the approximate boundary between soil types and the transition may be gradual.**

720 Greencrest Drive • Westerville, Ohio 43081 • 614-895-1400

TEST BORING LOG

PROJECT NAME Proposed Churchman Road Project - Rings Road and Cosgray Road - Dublin, Ohio — BORING NO. B- 1

PROJ. — SURF. ELEV.

CLIENT American Structurepoint, Inc. — NO. 14-G-18025 — DATE DRILLED 3/10/2014

GROUND WATER OBSERVATION

None FEET BELOW SURFACE AT COMPLETION

____ FEET BELOW SURFACE AT 24 HOURS

____ FEET BELOW SURFACE AT ____ HOURS

Proportions Used

Trace	Less than 5%
Few	5 to 10%
Little	15 to 25%
Some	30 to 45%
Mostly	50 to 100%

140 lb Wt. x 30" fall on 2" O.D. Sampler

Cohesionless Density		Cohesive Consistency	
0 - 10	Loose	0 - 4	Soft
10 - 30	Medium Dense	4 - 8	Medium Stiff
30 - 50	Dense	8 - 15	Stiff
50 +	Very Dense	15 - 30	Very Stiff
		30 +	Hard

LOCATION OF BORING **See Boring Location Plan**

DEPTH	Pocket Penetrometer (tsf)	Sample Depths From To	Type of Sample	Blows per 6" on Sampler From To 0-6	6-12	12-18	Moisture Density or Consist.	Strata Change Depth*	SOIL IDENTIFICATION Remarks include color, type of soil, etc. Rock-color, type, condition, hardness
	3.5	0.0-2.0	SS	2 4	3	2	Very Moist	2.0	Brown Mottled Gray Lean Clay (CL) - stained, moderately plastic
	3.75	2.0-4.0	SS	3 5	3	4	Moist		Brown Lean Clay with Sand (CL) - moderately plastic, little fine to coarse sand, trace gravel (glacial till)
5	3.75	4.0-6.0	SS	3 7	4	6	Moist		
	2.75-3.0	8.5-10.0	SS	9	8	12	Moist	9.0	
10								10.0	Gray Sandy Lean Clay with Gravel (CL) - low to moderate plasticity, little to some fine to coarse sand, little gravel (glacial till); random silty sand and gravel layers noted
15									BOTTOM OF BORING: 10'

*** The stratification lines represent the approximate boundary between soil types and the transition may be gradual.**

TEST BORING LOG

PROJECT NAME Proposed Churchman Road Project - Rings Road and Cosgray Road - Dublin, Ohio — BORING NO. B- 2

PROJ. — SURF. ELEV.

CLIENT American Structurepoint, Inc. — NO. 14-G-18025 — DATE DRILLED 3/10/2014

GROUND WATER OBSERVATION

None FEET BELOW SURFACE AT COMPLETION

____ FEET BELOW SURFACE AT 24 HOURS

____ FEET BELOW SURFACE AT ____ HOURS

Proportions Used

Trace	Less than 5%
Few	5 to 10%
Little	15 to 25%
Some	30 to 45%
Mostly	50 to 100%

140 lb Wt. x 30" fall on 2" O.D. Sampler

Cohesionless Density		Cohesive Consistency	
0 - 10	Loose	0 - 4	Soft
10 - 30	Medium Dense	4 - 8	Medium Stiff
30 - 50	Dense	8 - 15	Stiff
50 +	Very Dense	15 - 30	Very Stiff
		30 +	Hard

LOCATION OF BORING **See Boring Location Plan**

DEPTH	Pocket Penetrometer (tsf)	Sample Depths From To	Type of Sample	Blows per 6" on Sampler From To 0-6	6-12	12-18	Moisture Density or Consist.	Strata Change Depth*	SOIL IDENTIFICATION Remarks include color, type of soil, etc. Rock-color, type, condition, hardness
	--	0.0-2.0	SS	2 4	3	4	Moist		Brown Mottled Gray Lean Clay (CL) - stained, moderately plastic
	3	2.0-4.0	SS	4 5	5	6	Moist	4.0	
5	4	4.0-6.0	SS	4 7	5	7	Moist		Brown Lean Clay with Sand (CL) - moderately plastic, little fine to coarse sand, trace gravel (glacial till)
	3.5-4.0	8.5-10.0	SS	5	6	7	Moist	9.5	
10								10.0	Gray Sandy Lean Clay with Gravel (CL) - low to moderate plasticity, little to some fine to coarse sand, little gravel (glacial till); random silty sand and gravel layers noted
									BOTTOM OF BORING: 10'
15									

*** The stratification lines represent the approximate boundary between soil types and the transition may be gradual.**

720 Greencrest Drive • Westerville, Ohio 43081 • 614-895-1400

TEST BORING LOG

PROJECT NAME Proposed Churchman Road Project - Rings Road and Cosgray Road - Dublin, Ohio — BORING NO. B- 3

PROJ. NO. 14-G-18025 — SURF. ELEV. ____

CLIENT American Structurepoint, Inc. — DATE DRILLED 3/10/2014

GROUND WATER OBSERVATION

None FEET BELOW SURFACE AT COMPLETION

____ FEET BELOW SURFACE AT 24 HOURS

____ FEET BELOW SURFACE AT ____ HOURS

Proportions Used

Trace	Less than 5%
Few	5 to 10%
Little	15 to 25%
Some	30 to 45%
Mostly	50 to 100%

140 lb Wt. x 30" fall on 2" O.D. Sampler

Cohesionless Density		Cohesive Consistency	
0 - 10	Loose	0 - 4	Soft
10 - 30	Medium Dense	4 - 8	Medium Stiff
30 - 50	Dense	8 - 15	Stiff
50 +	Very Dense	15 - 30	Very Stiff
		30 +	Hard

LOCATION OF BORING **See Boring Location Plan**

DEPTH	Pocket Penetrometer (tsf)	Sample Depths From To	Type of Sample	Blows per 6" on Sampler From To 0-6	6-12	12-18	Moisture Density or Consist.	Strata Change Depth*	SOIL IDENTIFICATION Remarks include color, type of soil, etc. Rock-color, type, condition, hardness
	2.5-3.5	0.0-2.0	SS	4 6	5	6	Moist		Brown Mottled Gray Lean Clay (CL) - stained, moderately plastic
	1.5	2.0-4.0	SS	5 6	4	5	Moist		
	1.0	4.0-6.0	SS	4 4	6	4	Very Moist	5.0	
5									Brown Lean Clay with Sand (CL) - moderately plastic, little fine to coarse sand, trace gravel (glacial till)
	4	8.5-10.0	SS	6	9	10	Moist	9.0	Water Seepage at 9'
10								10.0	Gray Sandy Lean Clay with Gravel (CL) - low to moderate plasticity, little to some fine to coarse sand, little gravel (glacial till); random silty sand and gravel layers noted
									BOTTOM OF BORING: 10'
15									

*** The stratification lines represent the approximate boundary between soil types and the transition may be gradual.**

TEST BORING LOG

PROJECT NAME Proposed Churchman Road Project - Rings Road and Cosgray Road - Dublin, Ohio
BORING NO. B- 4
PROJ. NO. 14-G-18025
SURF. ELEV.
CLIENT American Structurepoint, Inc.
DATE DRILLED 3/10/2014

GROUND WATER OBSERVATION

9.0 FEET BELOW SURFACE AT COMPLETION
____ FEET BELOW SURFACE AT 24 HOURS
____ FEET BELOW SURFACE AT ____ HOURS

Proportions Used

Trace	Less than 5%
Few	5 to 10%
Little	15 to 25%
Some	30 to 45%
Mostly	50 to 100%

140 lb Wt. x 30" fall on 2" O.D. Sampler

Cohesionless Density		Cohesive Consistency	
0 - 10	Loose	0 - 4	Soft
10 - 30	Medium Dense	4 - 8	Medium Stiff
30 - 50	Dense	8 - 15	Stiff
50 +	Very Dense	15 - 30	Very Stiff
		30 +	Hard

LOCATION OF BORING **See Boring Location Plan**

DEPTH	Pocket Penetrometer (tsf)	Sample Depths From To	Type of Sample	Blows per 6" on Sampler From To 0-6	6-12	12-18	Moisture Density or Consist.	Strata Change Depth*	SOIL IDENTIFICATION Remarks include color, type of soil, etc. Rock-color, type, condition, hardness
	2.5	0.0-2.0	SS	3 5	4	4	Moist		Brown Mottled Gray Lean Clay (CL) - stained, moderately plastic
	4	2.0-4.0	SS	4 6	5	6	Moist	3.0	
	--	4.0-6.0	SS	5 9	6	7	Very Moist		Brown Lean Clay with Sand (CL) - moderately plastic, little fine to coarse sand, trace gravel (glacial till)
5									Water Seepage at 5.5'
	4.5	8.5-10.0	SS	7	8	12	Moist	9.0	
10								10.0	Gray Sandy Lean Clay with Gravel (CL) - low to moderate plasticity, little to some fine to coarse sand, little gravel (glacial till); random silty sand and gravel layers noted
									BOTTOM OF BORING: 10'
15									

*** The stratification lines represent the approximate boundary between soil types and the transition may be gradual.**

TEST BORING LOG

PROJECT NAME Proposed Churchman Road Project - Rings Road and Cosgray Road - Dublin, Ohio — BORING NO. B- 5

PROJ. — SURF. ELEV.

CLIENT American Structurepoint, Inc. — NO. 14-G-18025 — DATE DRILLED 3/10/2014

GROUND WATER OBSERVATION

None FEET BELOW SURFACE AT COMPLETION

_____ FEET BELOW SURFACE AT 24 HOURS

_____ FEET BELOW SURFACE AT ____ HOURS

Proportions Used

Trace	Less than 5%
Few	5 to 10%
Little	15 to 25%
Some	30 to 45%
Mostly	50 to 100%

140 lb Wt. x 30" fall on 2" O.D. Sampler

Cohesionless Density		Cohesive Consistency	
0 - 10	Loose	0 - 4	Soft
10 - 30	Medium Dense	4 - 8	Medium Stiff
30 - 50	Dense	8 - 15	Stiff
50 +	Very Dense	15 - 30	Very Stiff
		30 +	Hard

LOCATION OF BORING **See Boring Location Plan**

DEPTH	Pocket Penetrometer (tsf)	Sample Depths From To	Type of Sample	Blows per 6" on Sampler From To 0-6	6-12	12-18	Moisture Density or Consist.	Strata Change Depth*	SOIL IDENTIFICATION Remarks include color, type of soil, etc. Rock-color, type, condition, hardness
	2.5	0.0-2.0	SS	3 5	4	4	Moist	2.0	Brown Mottled Gray Lean Clay (CL) - stained, moderately plastic
	2	2.0-4.0	SS	4 7	5	5	Moist		Brown Lean Clay with Sand (CL) - moderately plastic, little fine to coarse sand, trace gravel (glacial till)
	0.5	4.0-6.0	SS	2 4	4	5	Very Moist		
5									Water Seepage at 5.5'
	4.5	8.5-10.0	SS	5	8	9	Moist	9.0	
								10.0	Gray Sandy Lean Clay with Gravel (CL) - low to moderate plasticity, little to some fine to coarse sand, little gravel (glacial till); random silty sand and gravel layers noted
10									BOTTOM OF BORING: 10'
15									

* The stratification lines represent the approximate boundary between soil types and the transition may be gradual.

720 Greencrest Drive • Westerville, Ohio 43081 • 614-895-1400

TEST BORING LOG

PROJECT NAME Proposed Churchman Road Project - Rings Road and Cosgray Road - Dublin, Ohio — BORING NO. B- 6

PROJ. NO. 14-G-18025 — SURF. ELEV. ____

CLIENT American Structurepoint, Inc. — DATE DRILLED 3/10/2014

GROUND WATER OBSERVATION

None FEET BELOW SURFACE AT COMPLETION

____ FEET BELOW SURFACE AT 24 HOURS

____ FEET BELOW SURFACE AT ____ HOURS

Proportions Used

Trace	Less than 5%
Few	5 to 10%
Little	15 to 25%
Some	30 to 45%
Mostly	50 to 100%

140 lb Wt. x 30" fall on 2" O.D. Sampler

Cohesionless Density		Cohesive Consistency	
0 - 10	Loose	0 - 4	Soft
10 - 30	Medium Dense	4 - 8	Medium Stiff
30 - 50	Dense	8 - 15	Stiff
50 +	Very Dense	15 - 30	Very Stiff
		30 +	Hard

LOCATION OF BORING **See Boring Location Plan**

DEPTH	Pocket Penetrometer (tsf)	Sample Depths From To	Type of Sample	Blows per 6" on Sampler From To 0-6	6-12	12-18	Moisture Density or Consist.	Strata Change Depth*	SOIL IDENTIFICATION Remarks include color, type of soil, etc. Rock-color, type, condition, hardness
	2.5-3.0	0.0-2.0	SS	2 4	2	3	Moist		Brown Mottled Gray Lean Clay (CL) - stained, moderately plastic
	2.5	2.0-4.0	SS	3 4	4	5	Moist		
	2	4.0-6.0	SS	4 7	4	5	Very Moist to Moist	4.5	Brown Lean Clay with Sand (CL) - moderately plastic, little fine to coarse sand, trace gravel (glacial till)
5									
	4	8.5-10.0	SS	7	10	13	Moist		
10								10.0	
									BOTTOM OF BORING: 10'
15									

*** The stratification lines represent the approximate boundary between soil types and the transition may be gradual.**

TEST BORING LOG

PROJECT NAME Proposed Churchman Road Project - Rings Road and Cosgray Road - Dublin, Ohio — BORING NO. B- 7

PROJ. NO. 14-G-18025 — SURF. ELEV. _____

CLIENT American Structurepoint, Inc. — DATE DRILLED 3/10/2014

GROUND WATER OBSERVATION

None FEET BELOW SURFACE AT COMPLETION

_____ FEET BELOW SURFACE AT 24 HOURS

_____ FEET BELOW SURFACE AT ____ HOURS

Proportions Used

Trace	Less than 5%
Few	5 to 10%
Little	15 to 25%
Some	30 to 45%
Mostly	50 to 100%

140 lb Wt. x 30" fall on 2" O.D. Sampler

Cohesionless Density		Cohesive Consistency	
0 - 10	Loose	0 - 4	Soft
10 - 30	Medium Dense	4 - 8	Medium Stiff
30 - 50	Dense	8 - 15	Stiff
50 +	Very Dense	15 - 30	Very Stiff
		30 +	Hard

LOCATION OF BORING **See Boring Location Plan**

DEPTH	Pocket Penetrometer (tsf)	Sample Depths From To	Type of Sample	Blows per 6" on Sampler From To 0-6	6-12	12-18	Moisture Density or Consist.	Strata Change Depth*	SOIL IDENTIFICATION Remarks include color, type of soil, etc. Rock-color, type, condition, hardness
	2.5-3.0	0.0-2.0	SS	2 4	3	3	Moist		Brown Mottled Gray Lean Clay (CL) - stained, moderately plastic
	3	2.0-4.0	SS	4 5	4	6	Moist		
	2.5	4.0-6.0	SS	5 7	6	5	Moist		
5								6.5	
									Brown Lean Clay with Sand (CL) - moderately plastic, little fine to coarse sand, trace gravel (glacial till)
	4.5	8.5-10.0	SS	7	12	14	Moist		
10								10.0	
									BOTTOM OF BORING: 10'
15									

*** The stratification lines represent the approximate boundary between soil types and the transition may be gradual.**

720 Greencrest Drive • Westerville, Ohio 43081 • 614-895-1400

TEST BORING LOG

PROJECT NAME Proposed Churchman Road Project - Rings Road and Cosgray Road - Dublin, Ohio
BORING NO. B- 8
CLIENT American Structurepoint, Inc.
PROJ. NO. 14-G-18025
SURF. ELEV.
DATE DRILLED 3/10/2014

GROUND WATER OBSERVATION

None FEET BELOW SURFACE AT COMPLETION
____ FEET BELOW SURFACE AT 24 HOURS
____ FEET BELOW SURFACE AT ____ HOURS

Proportions Used

Trace	Less than 5%
Few	5 to 10%
Little	15 to 25%
Some	30 to 45%
Mostly	50 to 100%

140 lb Wt. x 30" fall on 2" O.D. Sampler

Cohesionless Density		Cohesive Consistency	
0 - 10	Loose	0 - 4	Soft
10 - 30	Medium Dense	4 - 8	Medium Stiff
30 - 50	Dense	8 - 15	Stiff
50 +	Very Dense	15 - 30	Very Stiff
		30 +	Hard

LOCATION OF BORING **See Boring Location Plan**

DEPTH	Pocket Penetrometer (tsf)	Sample Depths From To	Type of Sample	Blows per 6" on Sampler From To 0-6	6-12	12-18	Moisture Density or Consist.	Strata Change Depth*	SOIL IDENTIFICATION Remarks include color, type of soil, etc. Rock-color, type, condition, hardness
	3	0.0-2.0	SS	3 5	5	4	Moist		Fill consisting of a mixture of lean clay, sand, gravel, and silt, trace topsoil
	4	2.0-4.0	SS	4 6	5	6	Moist	4.0	
	3.5	4.0-6.0	SS	7 9	7	8	Moist	6.0	Brown Mottled Gray Lean Clay (CL) - stained, moderately plastic
5									
	4	8.5-10.0	SS	6	6	7	Moist	10.0	Brown Lean Clay with Sand (CL) - moderately plastic, little fine to coarse sand, trace gravel (glacial till)
10									BOTTOM OF BORING: 10'
15									

*** The stratification lines represent the approximate boundary between soil types and the transition may be gradual.**

Summary of Laboratory Results

Proposed Churchman Road Project
Rings Road and Cosgray Road - Dublin, Ohio
GCI Job Number: 14-G-18025

Test Hole	Depth	Water Content (%)	Liquid Limit	Plastic Limit	Plasticity Index	% Fines (< #200 Sieve)	% Clay (< 0.005 mm)	Dry Density (pcf)	Optimum Moisture (%)	C.B.R.	Swell (%)	ASTM Class-ification	ASTM Description
B- 1	0.0	25.9						-	-	-	-		
B- 1	2.0	20.1						-	-	-	-		
B- 1	4.0	17.4						-	-	-	-		
B- 1	8.5	11.4						-	-	-	-		
B- 2	2.0	19.0	31	17	14	77.9	35	-	-	-	-	CL	Lean Clay With Sand
B- 2	4.0	18.1	37	17	20	68.0	38	-	-	-	-	CL	Sandy Lean Clay
B- 3	0.0	20.7						-	-	-	-		
B- 3	2.0	19.4						-	-	-	-		
B- 3	4.0	28.3						-	-	-	-		
B- 3	8.5	11.5						-	-	-	-		
B- 5	0.0	30.0						-	-	-	-		
B- 5	2.0	26.2						-	-	-	-		
B- 5	4.0	26.8						-	-	-	-		
B- 5	8.5	11.2						-	-	-	-		
B- 6	2.0	23.5	39	19	20	84.2	26	-	-	-	-	CL	Lean Clay With Sand
B- 6	4.0	17.8	27	17	10	70.8	31	-	-	-	-	CL	Lean Clay With Sand
B- 7	0.0	23.6						-	-	-	-		
B- 7	2.0	15.3						-	-	-	-		
B- 7	0-5	23.9	40	19	21	84.8	45	108.4	17.8	4.6	0.9	CL	Lean Clay With Sand
B- 7	4.0	20.4						-	-	-	-		
B- 7	8.5	17.5						-	-	-	-		

March 2014

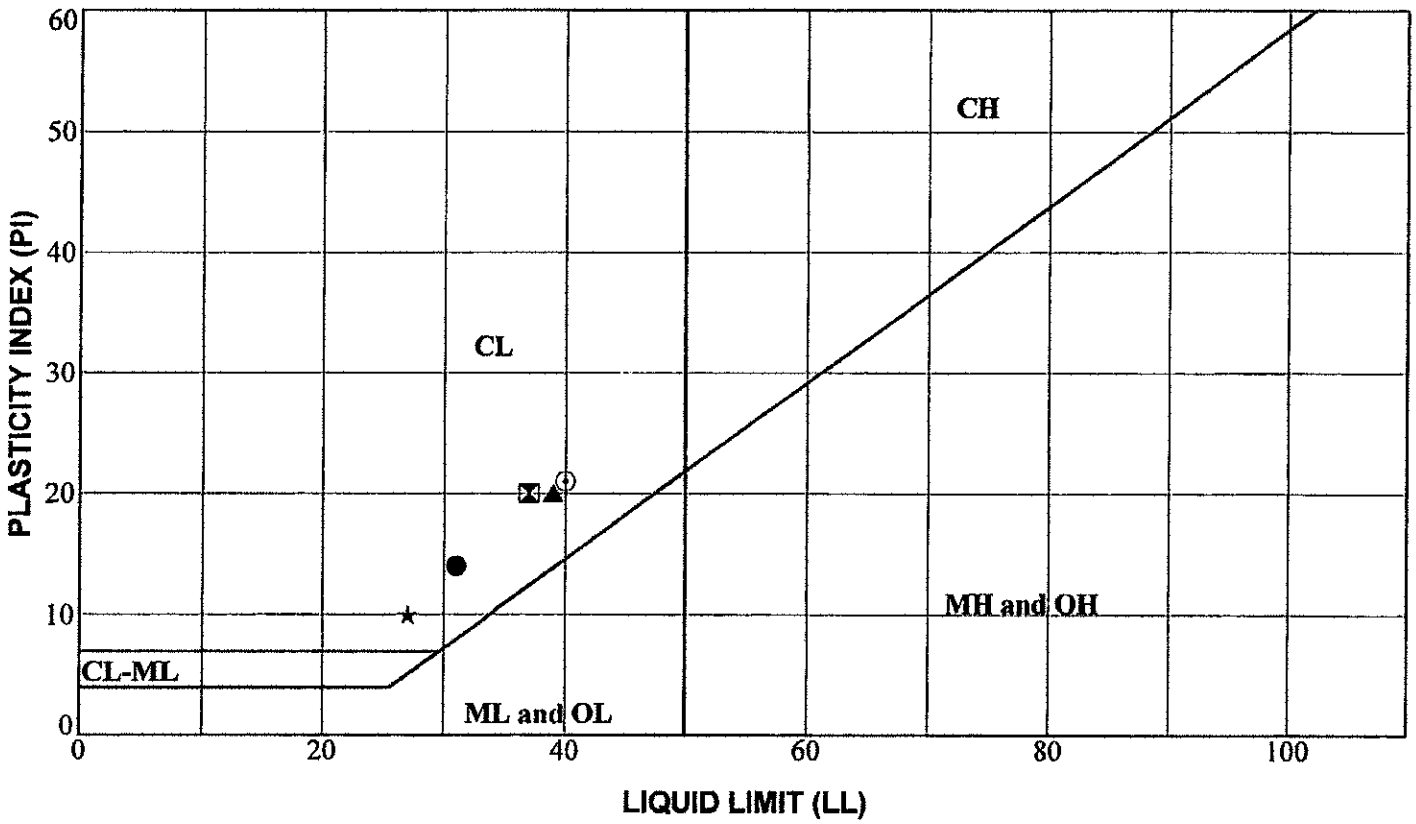

LEGEND:

	TEST HOLE	DEPTH	w_n	LL	PL	PI	ASTM CLASSIFICATION
●	B-2	2.0	19.0	31	17	14	CL
⊠	B-2	4.0	18.1	37	17	20	CL
▲	B-6	2.0	23.5	39	19	20	CL
★	B-6	4.0	17.8	27	17	10	CL
⊙	B-7	0-5	23.9	40	19	21	CL

Job No: *14-G-18025*

Method: *ASTM D4318*

Date: *March 2014*

ATTERBERG LIMITS TEST RESULTS

Proposed Churchman Road Project
Rings Road and Cosgray Road - Dublin, Ohio

Geotechnical Consultants, Inc. - Westerville Ohio 43081

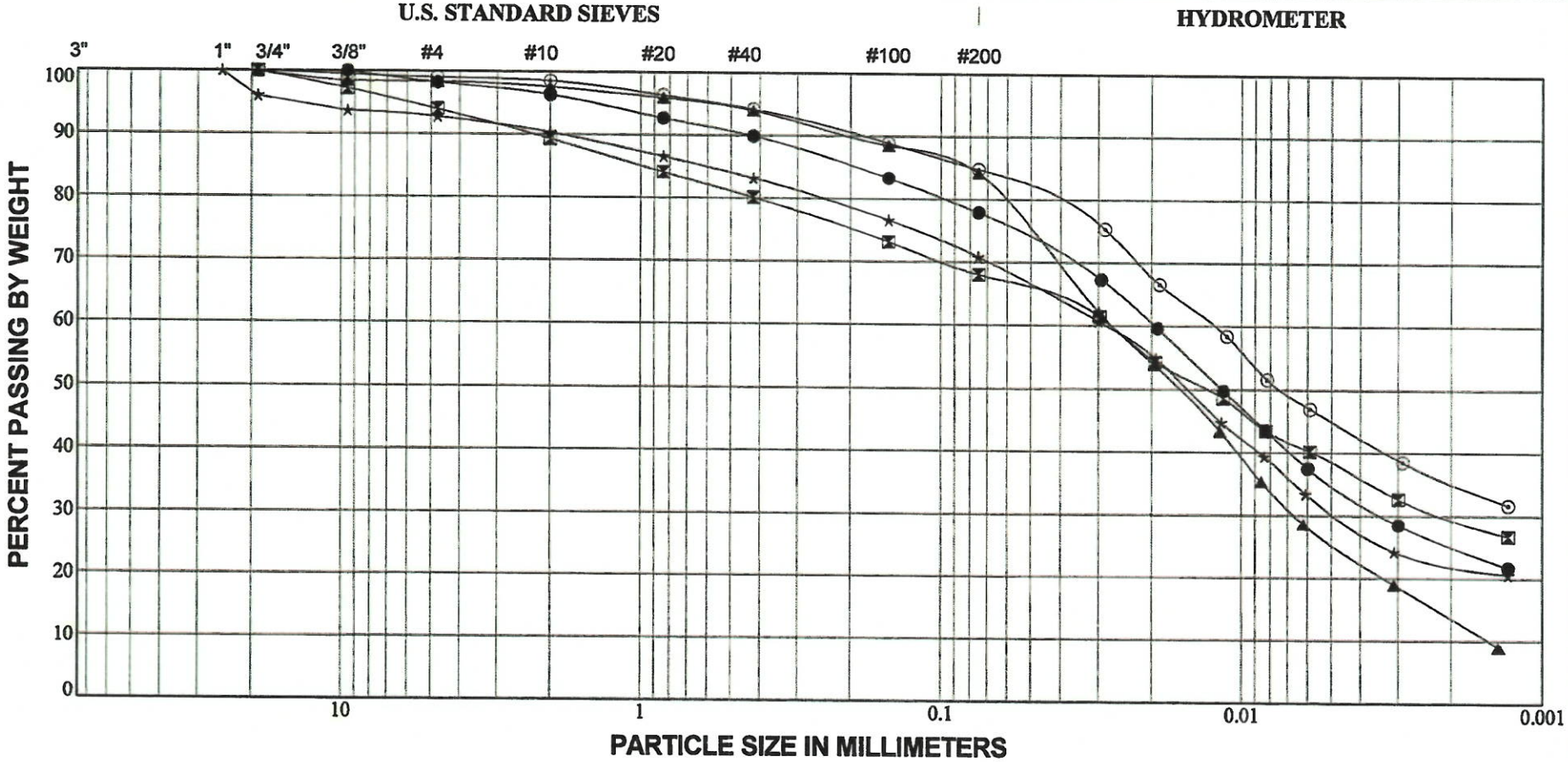

GRAVEL		SAND			SILT	CLAY
coarse	fine	coarse	medium	fine		

LEGEND:

	TEST HOLE	DEPTH	LL	w_n	PL	ASTM CLASSIFICATION	ASTM SOIL DESCRIPTION	C.B.R.
●	B-2	2.0	31	19.0	17	CL	Lean Clay With Sand	-
⊠	B-2	4.0	37	18.1	17	CL	Sandy Lean Clay	-
▲	B-6	2.0	39	23.5	19	CL	Lean Clay With Sand	-
★	B-6	4.0	27	17.8	17	CL	Lean Clay With Sand	-
⊙	B-7	0-5	40	23.9	19	CL	Lean Clay With Sand	4.6

Job No.: *14-G-18025*

Method: *ASTM D421 D422*

Date: *March 2014*

COMBINED PARTICLE SIZE DISTRIBUTION

Proposed Churchman Road Project - Rings Road and Cosgray Road - Dublin, Ohio

Geotechnical Consultants, Inc. - Westerville Ohio 43081

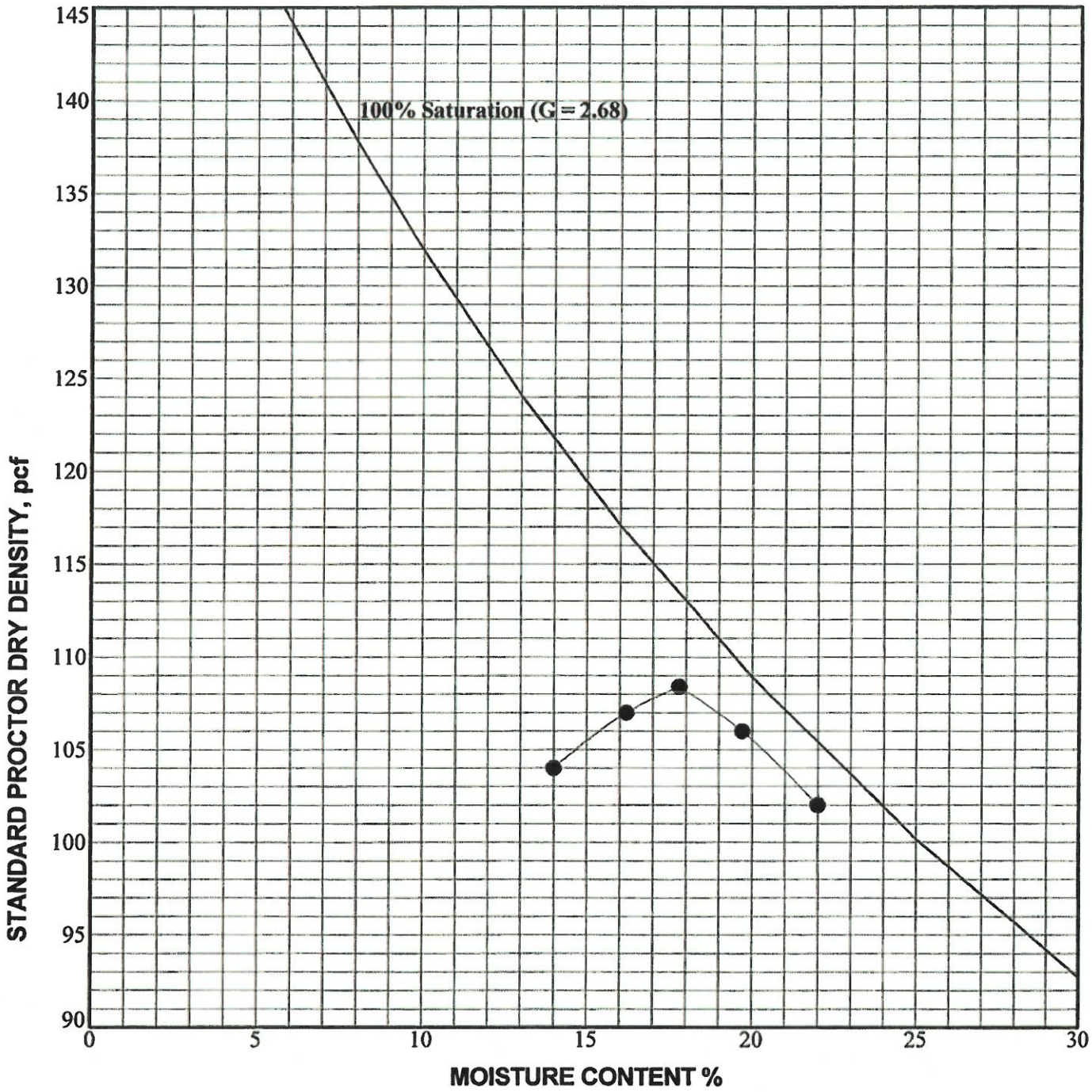

LEGEND:

	Test Hole	Depth	ASTM Classification	Maximum Dry Density, pcf	Optimum Moisture Content, %	Natural Moisture Content, %	CBR
●	B- 7	0-5	CL	108.4	17.8	23.9	4.6

Job No: *14-G-18025*

Method: *ASTM D698A*

Date: *March 2014*

LABORATORY COMPACTION TEST

Proposed Churchman Road Project
Rings Road and Cosgray Road - Dublin, Ohio

Geotechnical Consultants, Inc. - Westerville Ohio 43081

F. STANDARD DRAWINGS

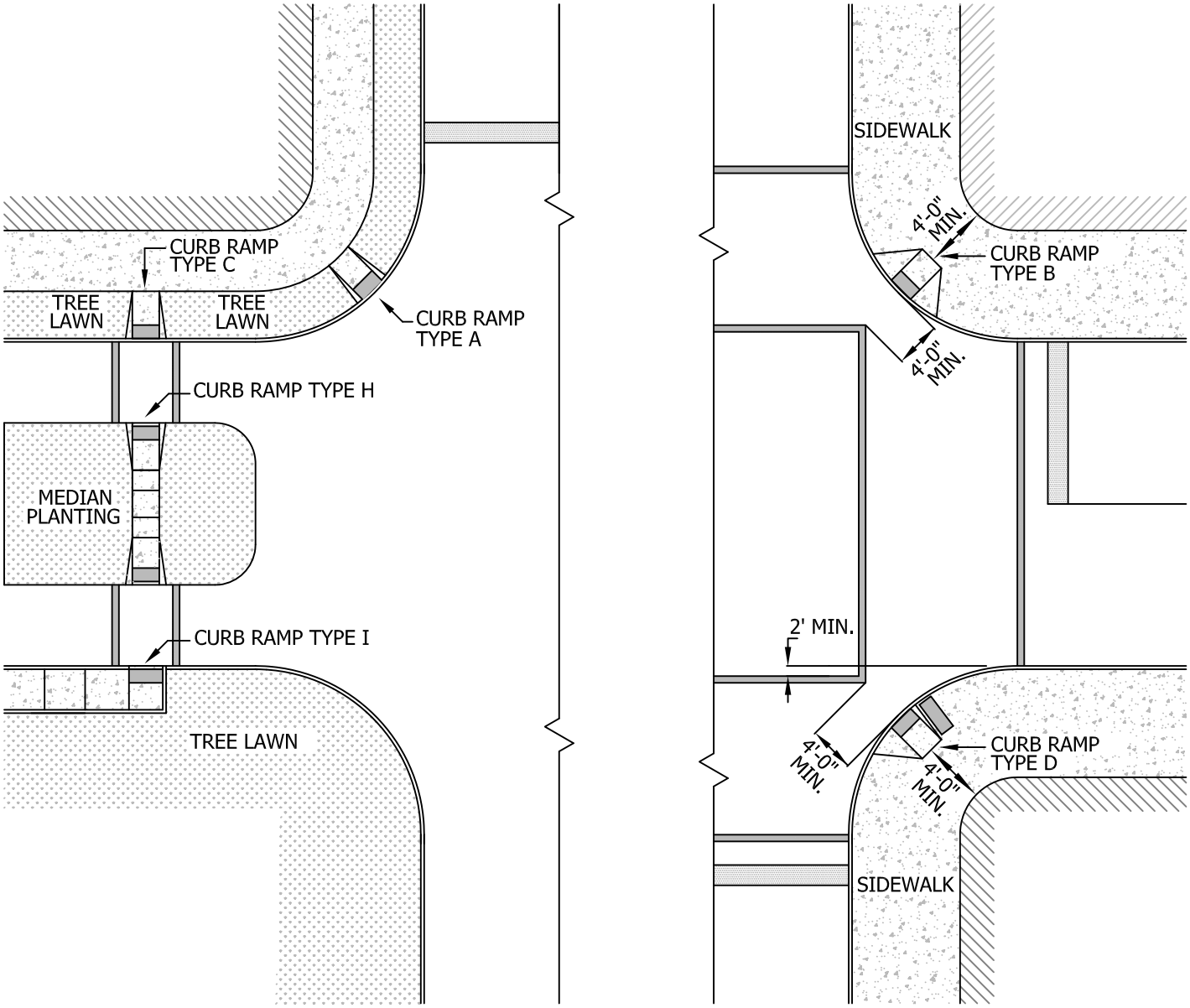

Date: 05/01/2014

City of Dublin
ENGINEERING

STANDARD DRAWING

TYPICAL LOCATION PLAN FOR SIDEWALK CURB RAMPS

SHEET 1 OF 1

DRAWING NO. **PD-01**

GENERAL NOTES, SIDEWALK CURB RAMPS

1. CURB RAMP COMPONENTS ASSEMBLY - THE CURB RAMP INCLUDES THE RAMPS, FLARED SIDES, LANDINGS AND ROLLED EDGES.

2. CURB RAMP TYPE - CURB RAMPS SHALL BE SPECIFIED BY THE APPROPRIATE TYPE AND SHALL BE PERPENDICULAR TO THE CURB EXCEPT TYPES E & F.

   TYPE A - DIAGONAL RAMP WITH FLARES IN TREE LAWN.
   TYPE B - DIAGONAL RAMP WITH FLARES.
   TYPE C - PERPENDICULAR RAMP IN TREE LAWN.
   TYPE D - PERPENDICULAR RAMP OBSTRUCTED ON ONE SIDE (WITH PRIOR WRITTEN CITY APPROVAL ONLY)
   TYPE E - RAMP WITH RECESSED LOWER LANDING FOR ALLEYS AND DRIVEWAYS (WITH TREE LAWN).
   TYPE F - RAMP WITH RECESSED LOWER LANDING FOR ALLEYS AND DRIVEWAYS (NO TREE LAWN).
   TYPE G - PARALLEL (OFF-STREET LANDING) WITH 2 TRANSITION RAMPS (WITH PRIOR WRITTEN CITY APPROVAL ONLY).
   TYPE H - MEDIAN RAMP WITH CENTER LANDING.
   TYPE I - COMBINED PERPENDICULAR AND PARALLEL RAMP ONE DIRECTION.

3. RAMP RUNNING SLOPE - THE RAMP RUNNING SLOPE SHALL BE 5% (1:20) TO 7.7% (1:13).

4. RAMP CROSS SLOPE - THE MAXIMUM CROSS SLOPE SHALL BE 1.56% (1:64, 3/16 INCH PER FOOT).

5. PERPENDICULAR RAMP WIDTH - THE MINIMUM WIDTH OF A SIDEWALK RAMP SHALL BE 4-FEET AND OF A BIKE PATH RAMP SHALL BE 8-FEET. THE WIDTH MAY BE REDUCED TO A MINIMUM OF 3-FEET WITH PRIOR WRITTEN CITY APPROVAL IF CLEARANCE RESTRICTIONS EXIST.

6. PARALLEL RAMP WIDTH - TYPE H RAMP SHALL BE A MINIMUM OF 4-FEET BY 5-FEET & 5-FEET BY 5-FEET RESPECTIVELY, PER STANDARD DRAWINGS.

7. ALL JOINTS BETWEEN NEW AND EXISTING MATERIALS SHALL BE FLUSH.

8. FLARES - THE LENGTH OF THE FLARE AT THE FACE OF CURB SHALL BE A MAXIMUM OF 10% OR 10 TIMES THE CURB HEIGHT, WHICHEVER IS LESS.

9. LANDINGS - LANDINGS SHALL BE A MINIMUM OF 4-FEET BY 4-FEET WITH A 1.56% (1:64) CROSS SLOPE FOR ALL CURB RAMP TYPES EXCEPT PARALLEL CURB RAMPS. OFF STREET LANDINGS FOR PARALLEL CURB RAMPS SHALL BE A MINIMUM OF 4-FEET BY 5-FEET AS INDICATED IN THE STANDARD DRAWINGS. LANDINGS ARE REQUIRED AS FOLLOWS:

   A. TOP LANDING - CURB RAMP TYPES A, B, C AND G SHALL HAVE LANDINGS AT THE TOP OF THE RAMP.

   B. LOWER RECESSED LANDING - CURB RAMP TYPE E AND F SHALL HAVE A RECESSED LANDING AT THE BOTTOM OF THE RAMP WHERE IT INTERSECTS THE CURB LINE.

   C. LANDING AT INTERSECTING SIDEWALKS - WHEREVER SIDEWALKS INTERSECT THERE SHALL BE A LANDING MEETING THE ABOVE REQUIREMENTS.

(GENERAL NOTES CONTINUED ON SHEET 2)

GENERAL NOTES, SIDEWALK CURB RAMPS (CONTINUED)

10. STREET COUNTER SLOPE - THE COUNTER SLOPE AT THE BASE OF THE RAMP SHALL BE A MAXIMUM OF 1:20 OR 5% FOR A MINIMUM OF 2-FEET.

11. MAXIMUM DIFFERENTIAL BETWEEN RAMP RUNNING SLOPE AND GUTTER PAN SHALL BE 13 %, THE PREFERRED DIFFERENTIAL IS 11%..

12. SURFACES - RAMP AND FLARE SURFACES MUST BE STABLE AND SLIP RESISTANT. RAMPS SHALL BE MEDIUM BROOMED TRANSVERSE TO THE DIRECTION OF TRAVEL. GRATINGS, VALVE BOXES, AND UTILITY BOXES SHALL NOT BE LOCATED IN THE RAMP, LANDING, OR TRANSITION AREAS.

13. DETECTABLE WARNINGS SHALL BE INSTALLED IN ACCORDANCE WITH CITY OF DUBLIN STANDARD DRAWING PD-03. DETCTABLE WARNINGS SHALL BE PROVIDED WHEREVER A CURB RAMP CROSSES A PUBLIC VEHICULAR WAY.

14. THE PEDESTRIAN WALKWAY WITHIN THE STREET PAVEMENT, AT LEAST 7-FEET WIDE, BETWEEN OPPOSING RAMPS SHALL HAVE A CROSS-SLOPE (THE LONGITUDINAL STREET SLOPE) OF NO GREATER THAN 2%. VERTICAL STREET CURVES SHALL BE INSTALLED AS NEEDED.

15. GRAVEL BEDDING SHALL HAVE A MINIMUM DEPTH OF 4 INCHES AND SHOULD NOT EXCEED A DEPTH OF 6 INCHES.

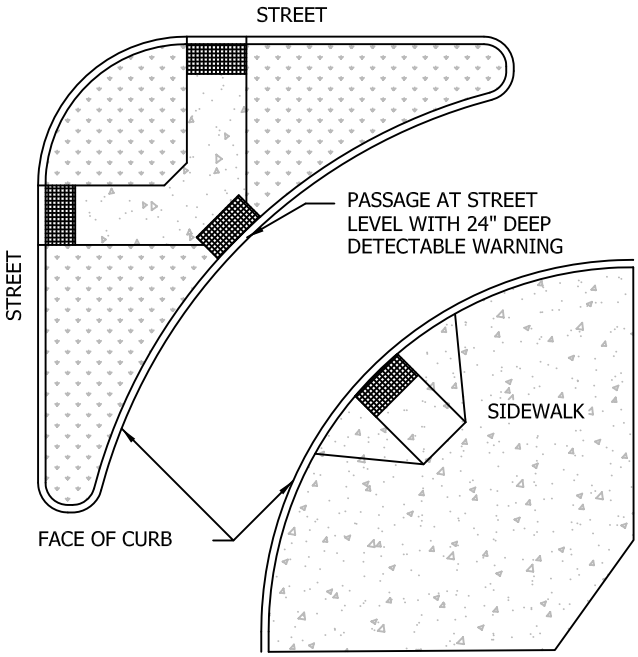

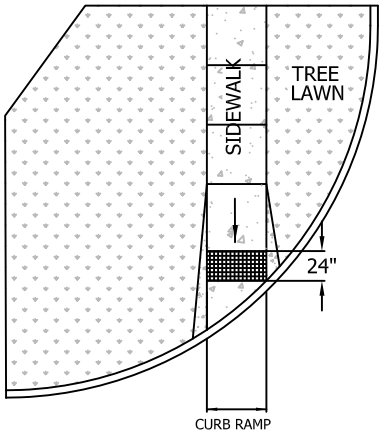

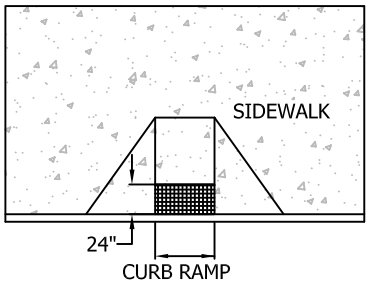

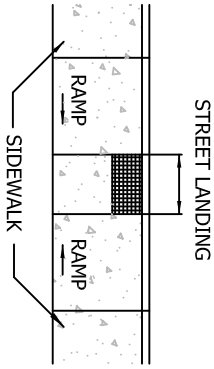

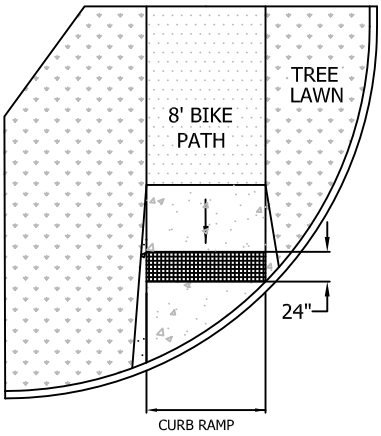

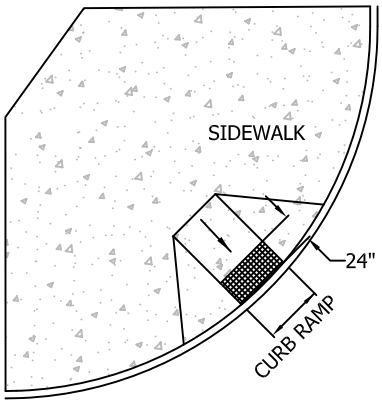

NOTES:

1. DETECTABLE WARNINGS SHALL BE PROVIDED WHEREVER A CURB RAMP CROSSES A VEHICULAR WAY EXCLUDING UNSIGNALIZED DRIVEWAY CROSSINGS.

2. DETECTABLE WARNINGS SHALL BE PROVIDED 24 INCHES IN THE DIRECTION OF TRAVEL AND EXTEND THE FULL WIDTH OF THE CURB RAMP OR FLUSH SURFACE. THE DETECTABLE WARNING SHALL BE LOCATED ADJACENT TO THE CURB LINE.

3. DETECTABLE WARNINGS SHALL BE PLACED 2" BEHIND THE BACK OF CURB.

4. DETECTABLE WARNINGS SHALL BE ADA SOLUTIONS, CAST IN PLACE REPLACEABLE TILE OR APPROVED EQUAL. BRICK RED IN COLOR FOR USE ON CONCRETE RAMPS AND BLACK IN COLOR FOR USE ON BRICK PAVER RAMPS.

Date: 05/01/2014

City of Dublin
ENGINEERING

STANDARD DRAWING

DETECTABLE WARNINGS

SHEET 1 OF 1

DRAWING NO. **PD-03**

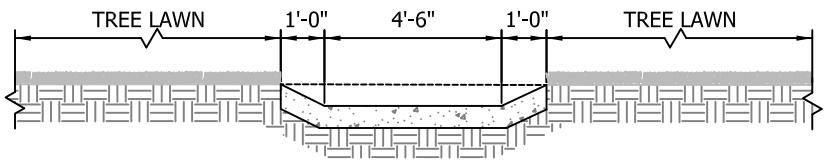

SECTION B-B

NOTE:
SEE STANDARD DRAWING PD-03 FOR DETECTABLE WARNINGS DETAILS

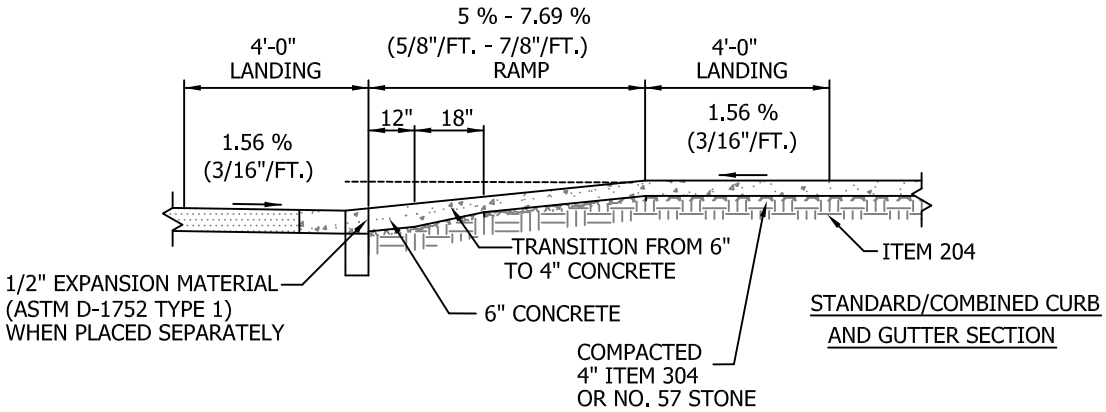

STANDARD/COMBINED CURB AND GUTTER SECTION

SECTION A-A

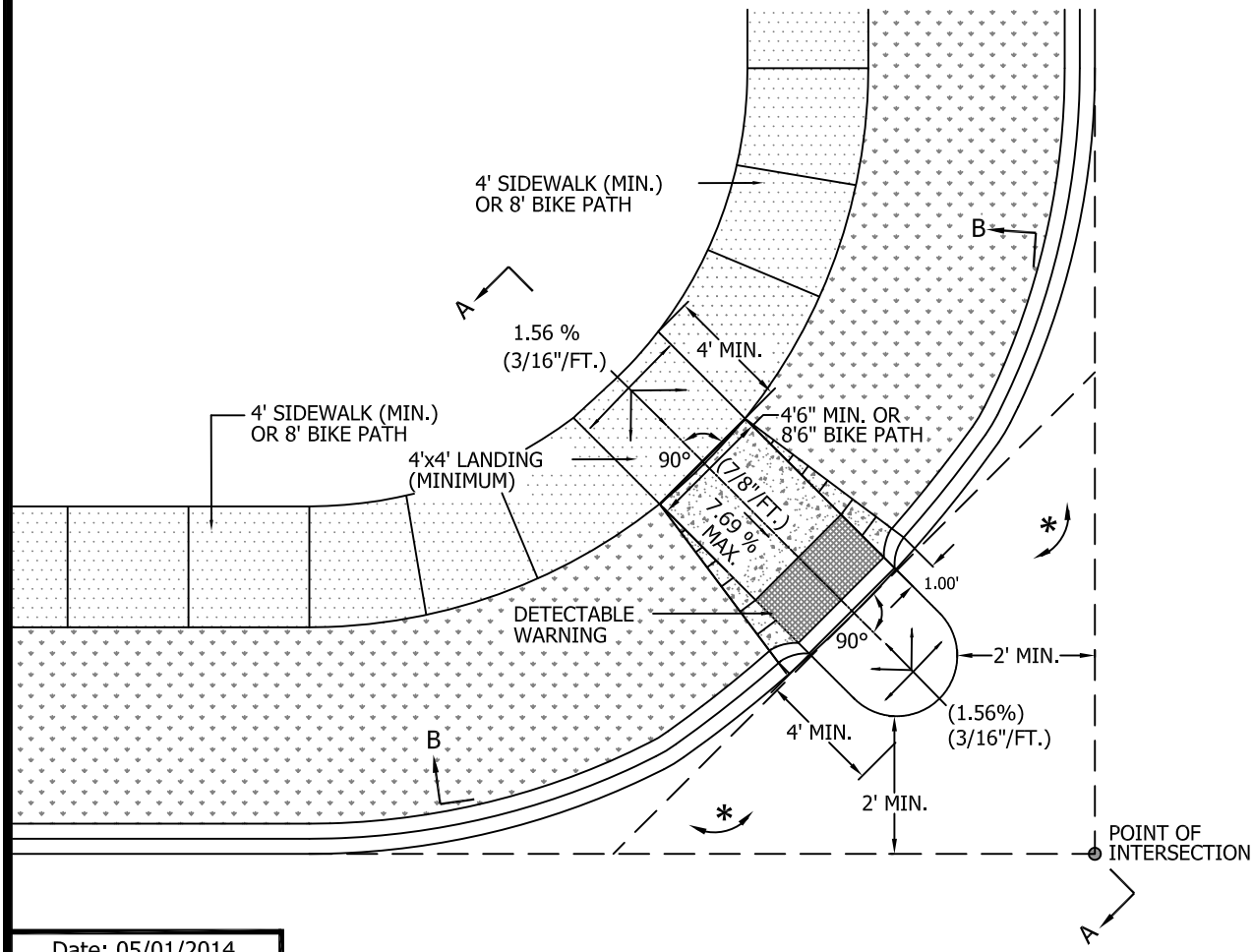

Date: 05/01/2014

City of Dublin
ENGINEERING

STANDARD DRAWING

CURB RAMP TYPE A DIAGONAL IN TREE LAWN

SHEET 1 OF 1

DRAWING NO. **PD-04**

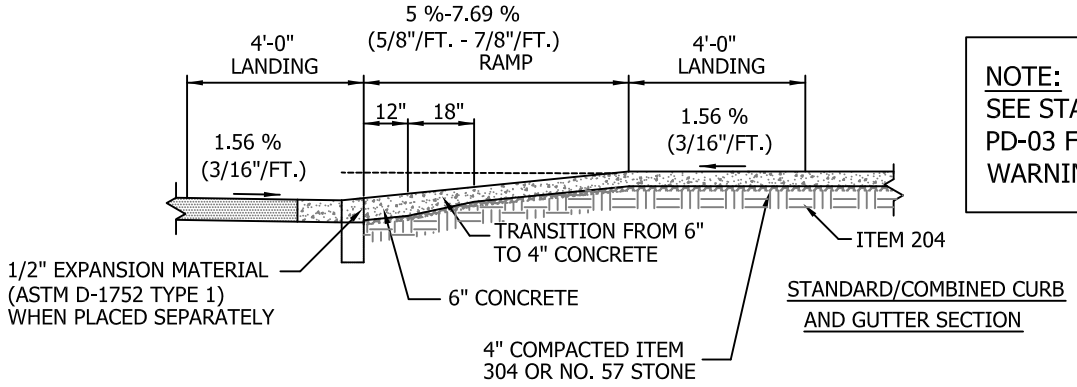

STANDARD/COMBINED CURB AND GUTTER SECTION

SECTION A-A

NOTE:
SEE STANDARD DRAWING PD-03 FOR DETECTABLE WARNINGS DETAILS

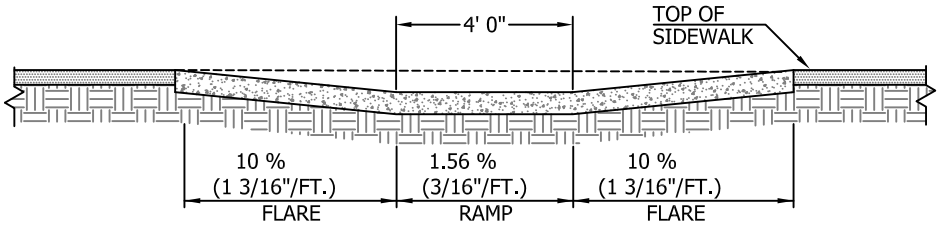

SECTION B-B

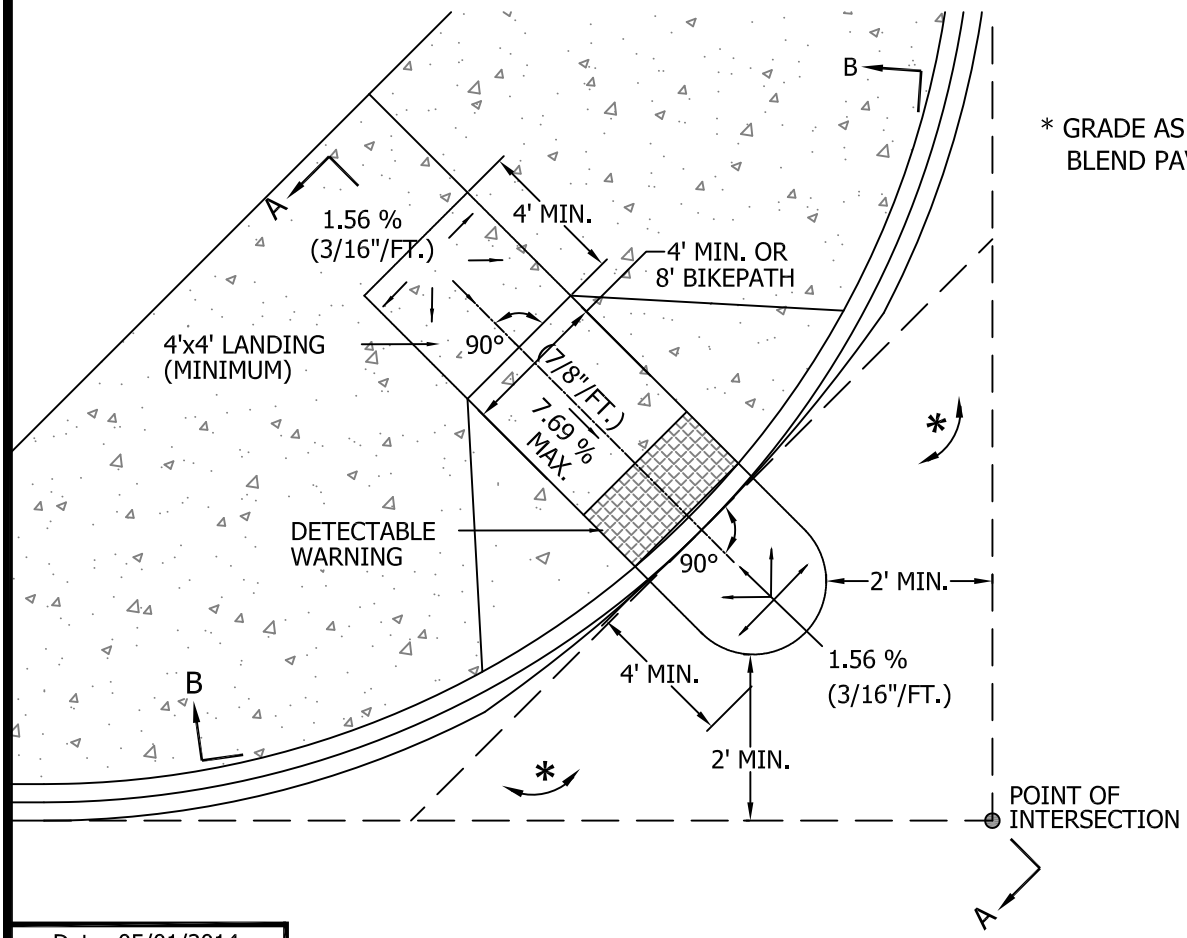

* GRADE AS REQUIRED TO BLEND PAVEMENT GRADES

Date: 05/01/2014

City of Dublin
ENGINEERING

STANDARD DRAWING

CURB RAMP TYPE B DIAGONAL WITH FLARES

SHEET 1 OF 1

DRAWING NO. **PD-05**

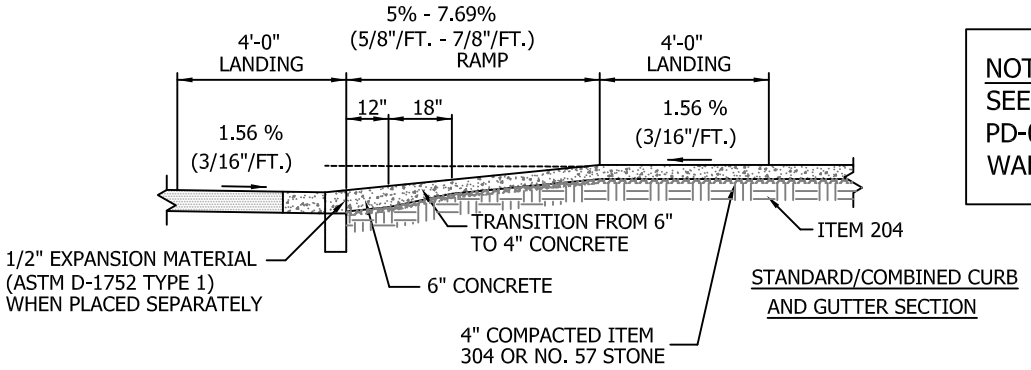

SECTION A-A

NOTE:
SEE STANDARD DRAWING PD-03 FOR DETECTABLE WARNINGS DETAILS

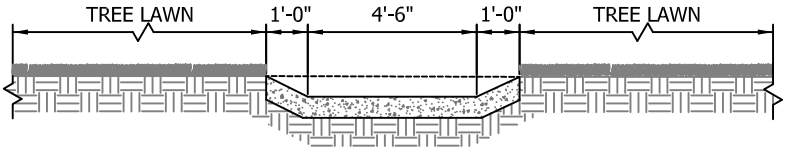

SECTION B-B

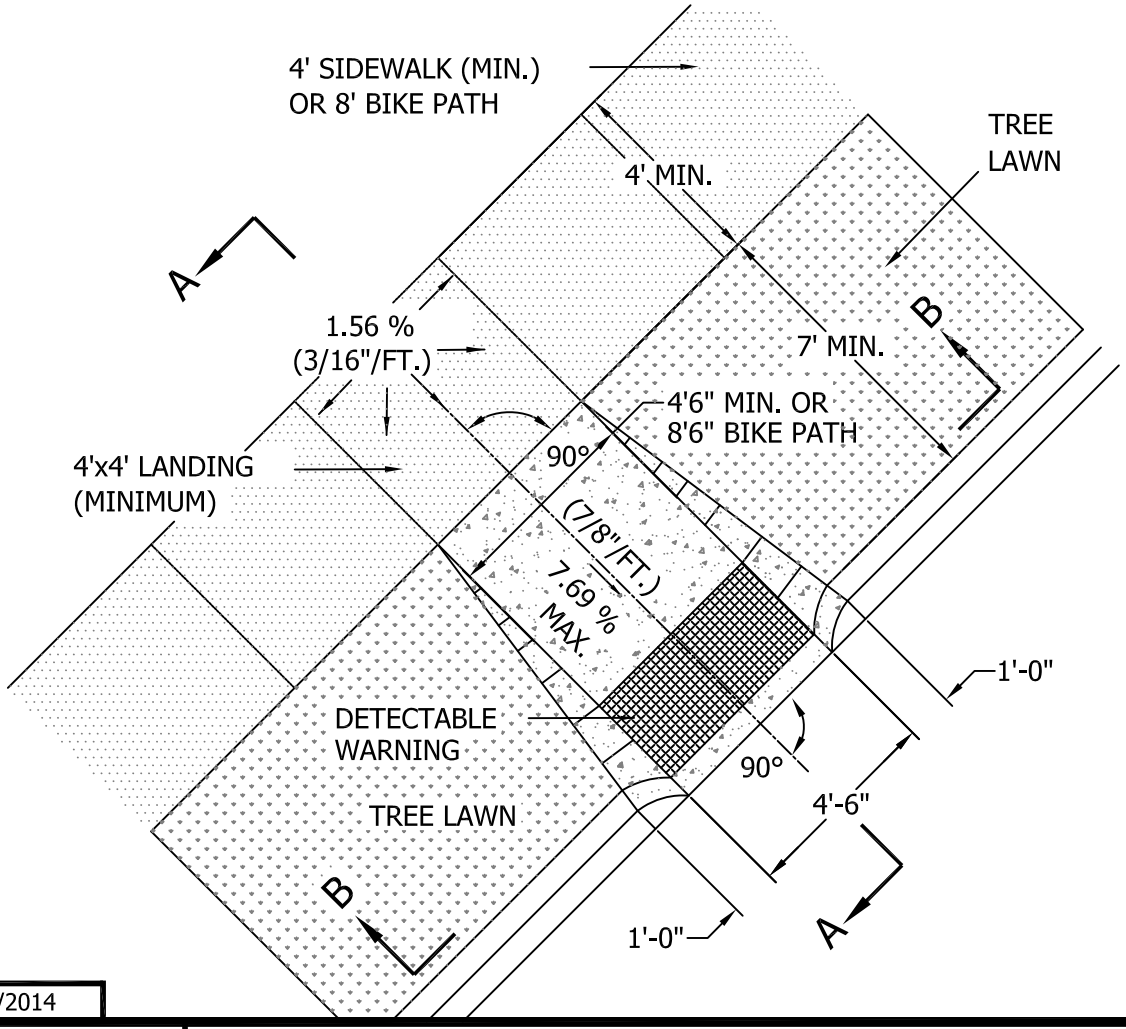

Date: 05/01/2014

City of Dublin
ENGINEERING

STANDARD DRAWING

CURB RAMP TYPE C IN TREE LAWN

SHEET 1 OF 1

DRAWING NO. **PD-06**

NOTE: SEE RD-02 FOR CURB & GUTTER DETAIL

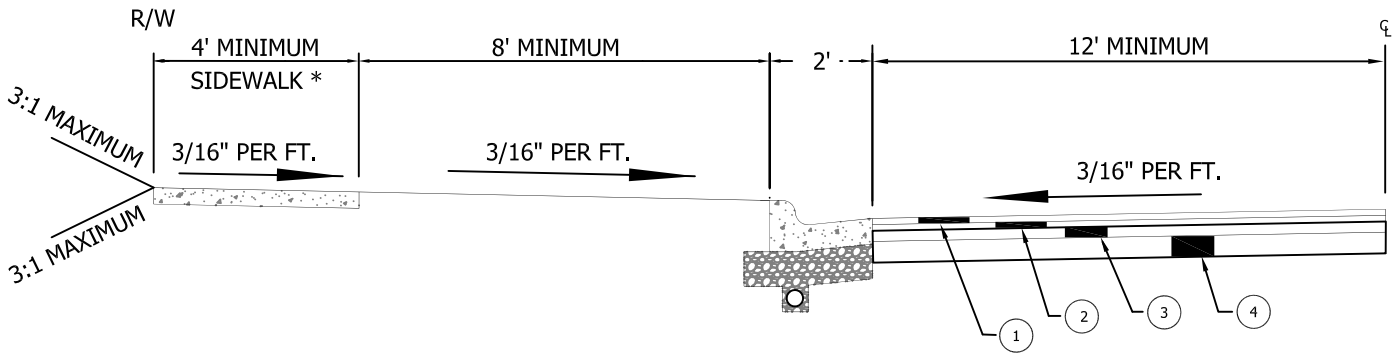

* 5'-0" SIDEWALK (WHERE REQUIRED)
8'-0" BIKE PATH (WHERE REQUIRED)

MINOR AND LOCAL STREETS	(MINIMUM PAVEMENT DEPTH*)	ALTERNATIVE ***
(1) ASPHALT CONCRETE SURFACE COURSE TYPE 1 PG. 64-22 MEDIUM TRAFFIC ITEM 448 ----	1 1/4"	1 1/4"
(2) ASPHALT CONCRETE INTERMEDIATE COURSE TYPE 2 PG. 64-22 MEDIUM TRAFFIC ITEM 448-----	1 3/4"	1 3/4"
(3) BITUMINOUS AGGREGATE BASE ITEM 301 ---- (TWO COURSES OF 3")	3"	6"
(4) AGGREGATE BASE ITEM 304 ----------	6"	N/A

* NOTE: MINIMUM PAVEMENT DEPTH ARE TYPICAL FOR RESIDENTIAL APPLICATIONS. ROADWAYS IN INDUSTRIAL AND COMMERCIAL AREAS MAY BE REQUIRED TO HAVE DEPTHS DESIGNED FOR ACTUAL TRAFFIC LOADINGS USING AASHTO METHODS AS DIRECTED BY THE CITY ENGINEER.

COLLECTOR AND ARTERIAL STREETS **	(MINIMUM PAVEMENT DEPTH*)	ALTERNATIVE ***
(1) ASPHALT CONCRETE SURFACE COURSE TYPE 1 PG. 64-22 MEDIUM TRAFFIC ITEM 448 ----	1 1/4"	1 1/4"
(2) ASPHALT CONCRETE INTERMEDIATE COURSE TYPE 2 PG. 64-22 MEDIUM TRAFFIC ITEM 448-----	1 3/4"	1 3/4"
(3) BITUMINOUS AGGREGATE BASE ITEM 301 ---- (TWO COURSES OF 3")	6"	9"
(4) AGGREGATE BASE ITEM 304 ----------	6"	N/A

** NOTE: COLLECTOR AND ARTERIAL STREET PAVEMENT DEPTHS SHALL BE DESIGNED TO ACTUAL TRAFFIC LOADINGS USING THE AASHTO GUIDE FOR DESIGN OF PAVEMENT STRUCTURES. SHOULD CALCULATED DEPTHS BE LESS THAN THE MINIMUM DEPTHS, THE MINIMUM DEPTHS SHALL BE USED.

*** NOTE: ALTERNATIVE PAVEMENT SECTION REQUIRES CITY ENGINEER'S APPROVAL PRIOR TO INSTALLATION.

Date: 05/01/2014

City of Dublin
ENGINEERING

STANDARD DRAWING

TYPICAL STREET SECTIONS

SHEET 1 OF 1

DRAWING NO. **RD-01**

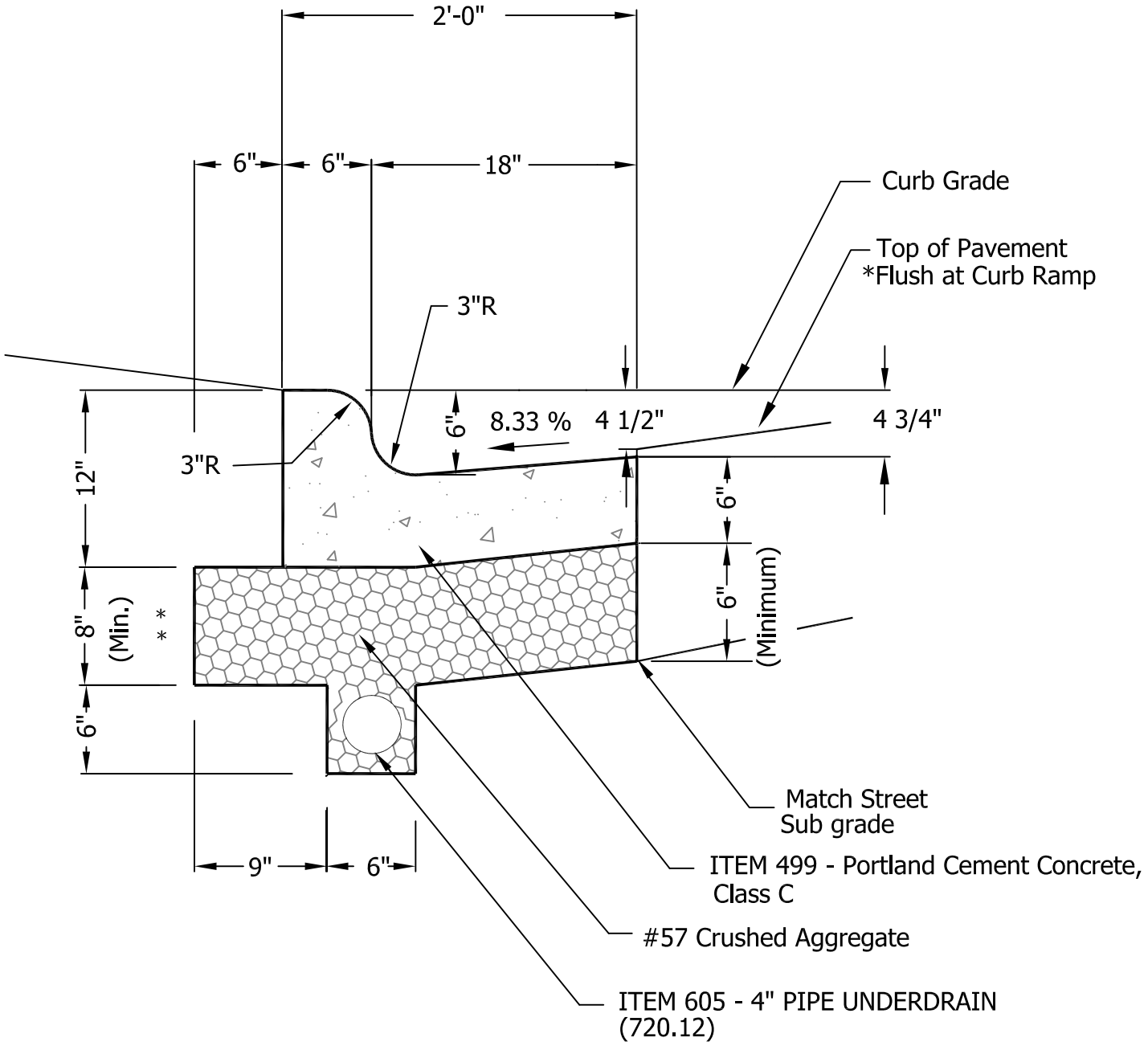

* SEE DRAWING RD-03 FOR GUTTER TRANSITION AT CURB RAMP.

** 10" AT COMMERCIAL DRIVE ENTRANCES.

Date: 05/01/2014

City of Dublin
ENGINEERING

STANDARD DRAWING

COMBINATION CONCRETE CURB AND GUTTER

SHEET 1 OF 1

DRAWING NO. ***RD-02***

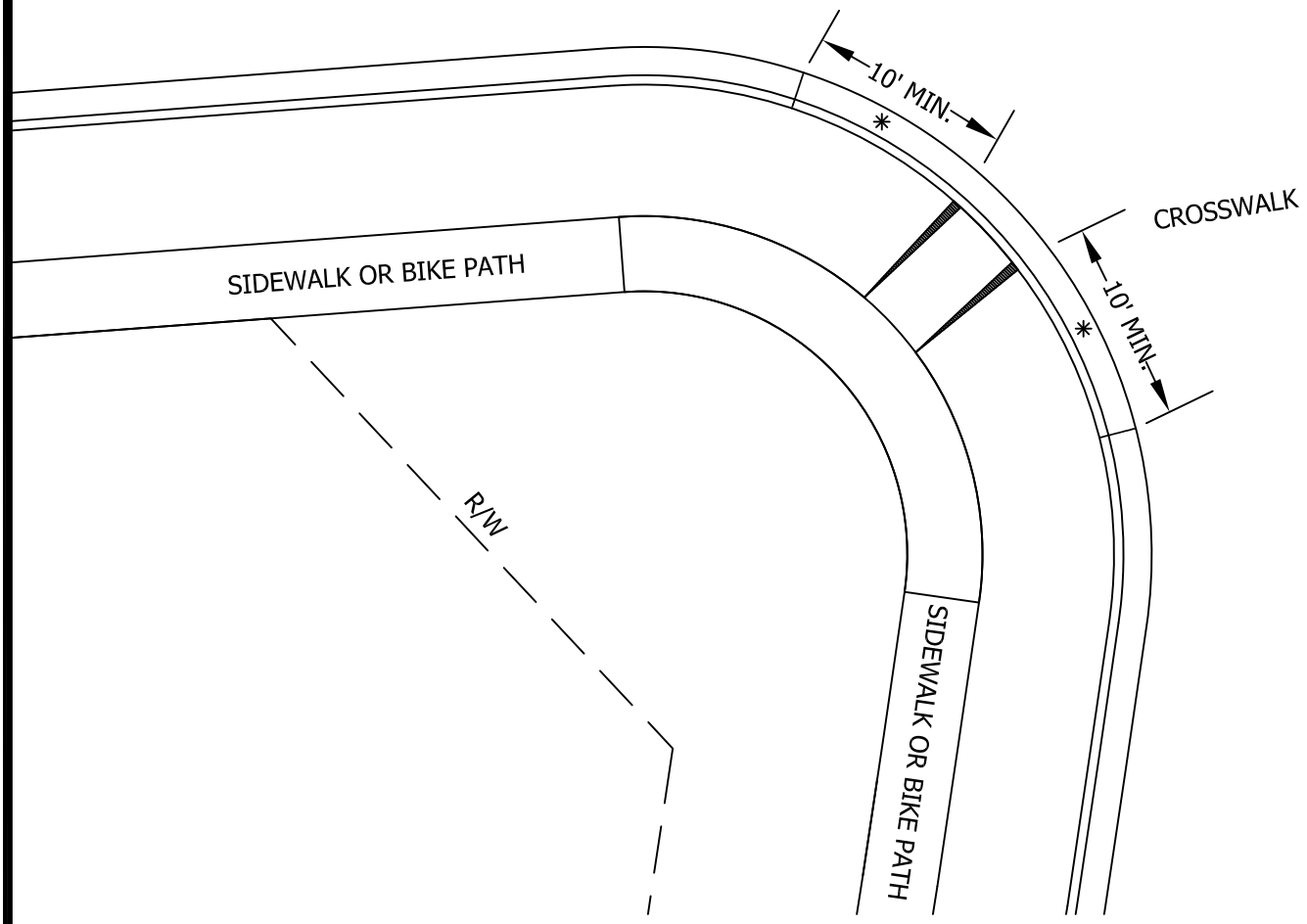

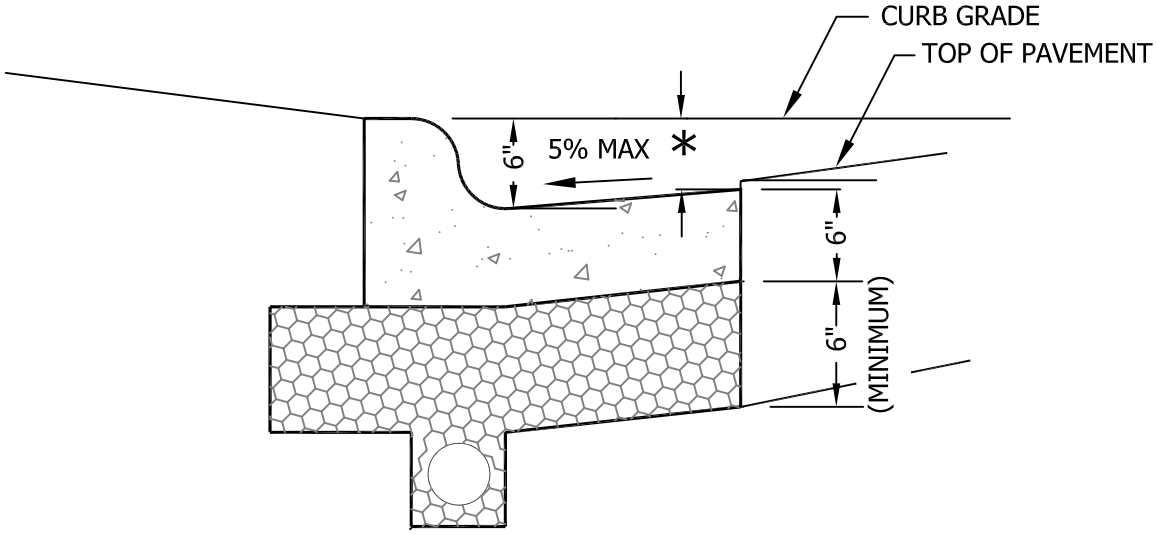

* TRANSITION GUTTER LIP FROM 4 1/2"-INCH TYPICAL DEPTH TO 5 5/8-INCH DEPTH WITHIN AT LEAST 10-FEET OF THE CURB RAMP. THE 5 5/8-INCH DEPTH IS TO BE MAINTAINED THROUGH THE CURB RAMP. THE TRANSITION LENGTH MAY BE ADJUSTED PER THE DIRECTION OF THE CITY ENGINEER.

Date: 05/01/2014

City of Dublin
ENGINEERING

STANDARD DRAWING

TYPICAL GUTTER SECTION TRANSITIONS

SHEET 1 OF 1

DRAWING NO. ***RD-03***

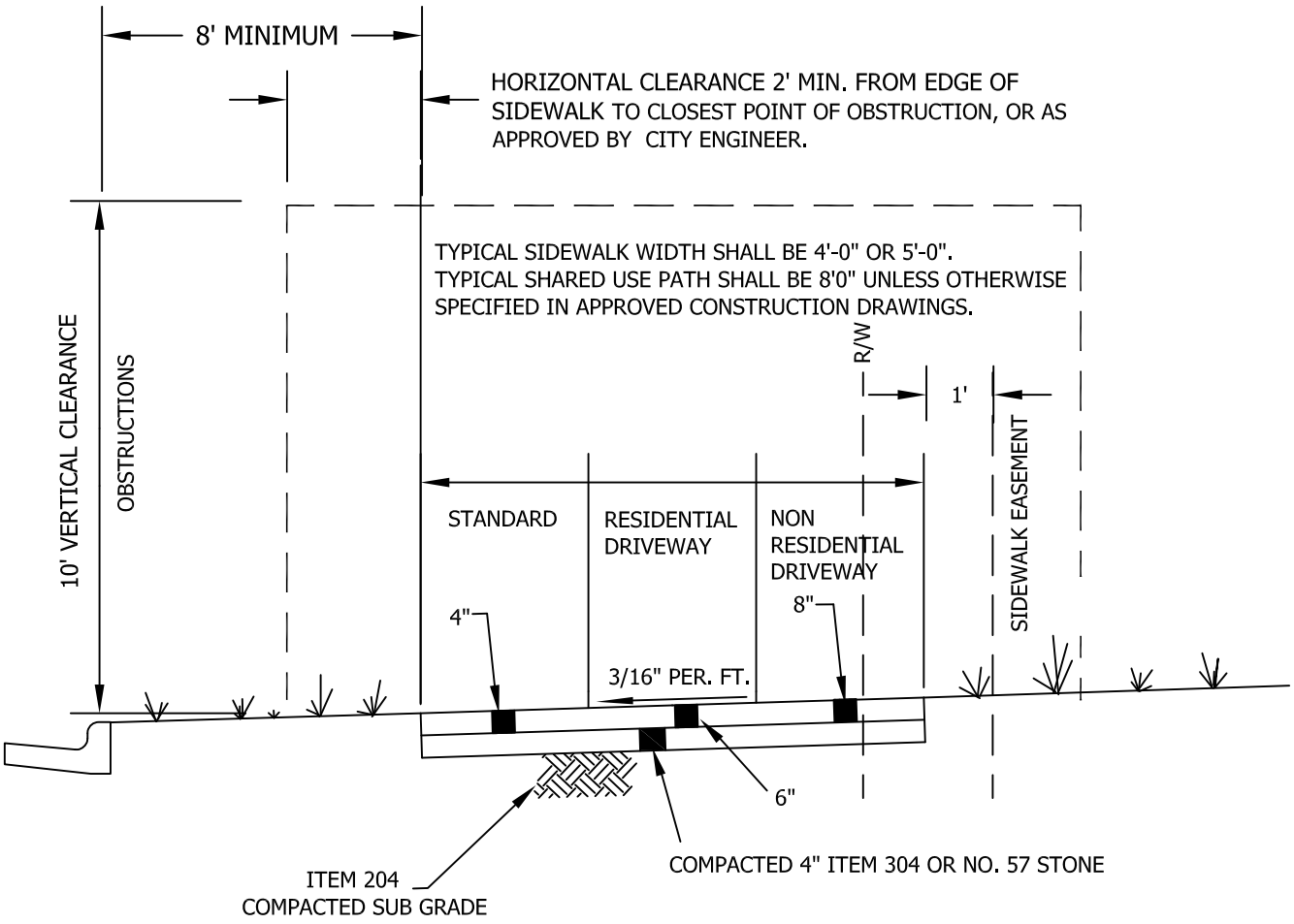

1. ALL WALKWAYS SHALL BE CONSTRUCTED PER CCMS ITEM 608 OR AS DIRECTED BY CITY ENGINEER.
2. ALL DISTURBED AREAS SHALL BE SEEDED AND MULCHED. SEED MIXTURE SHALL BE APPROVED BY THE CITY ENGINEER.
3. CITY OF COLUMBUS CONSTRUCTION AND MATERIAL SPECIFICATIONS, CURRENT EDITIONS, AND ANY OTHER SUPPLEMENTS THERETO, SHALL GOVERN ALL CONSTRUCTION ITEMS UNLESS OTHERWISE NOTED.
4. SIDEWALKS/BIKE PATHS CROSSING RESIDENTIAL DRIVEWAYS SHALL BE 6" CLASS C CONCRETE ITEM 499. SIDEWALKSSHARED USE PATHS CROSSING NON-RESIDENTIAL DRIVEWAY APPROACHES SHALL BE MINIMUM 8" CLASS C CONCRETE,ITEM 499 UNLESS OTHERWISE APPROVED BY THE CITY ENGINEER.
5. ALL COMMERCIAL DRIVES SHALL HAVE 6" OF ITEM 304.
6. INSPECTION SCHEDULING SHALL BE MADE WITH THE BUILDING DIVISION WHEN CONCRETE FORMS ARE READY FOR INSPECTION, AT LEAST 48 HOURS BEFORE CONCRETE IS TO BE PLACED AT (614) 410-4600.
7. ALL SHARED USE PATH JOINTS ARE TO BE SAWCUT.
8. SIDEWALKS/FLATWORK SHALL BE TOOL CUT & RETRACED.
9. FULL DEPTH EXPANSION MATERIAL (1/2" THICK) SHALL BE PLACED ADJOINING ALL EXISTING CONCRETE CONFORMING TO ASTM D-1752 TYPE 1.

Date: 05/01/2014

City of Dublin
ENGINEERING

STANDARD DRAWING

CONCRETE SIDEWALK AND SHARED USE PATH

SHEET 1 OF 1

DRAWING NO. **RD-05**

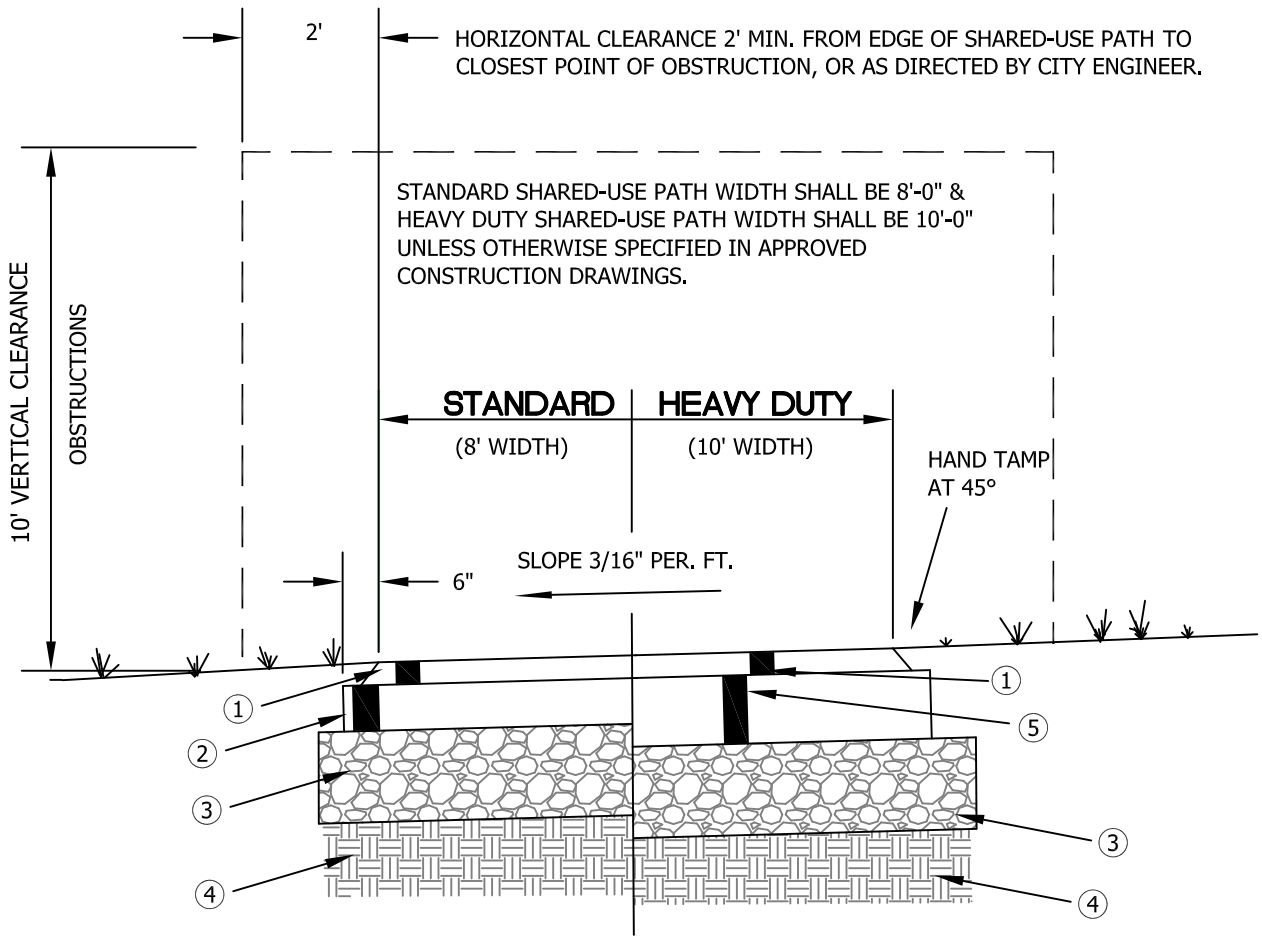

1. 1-1/2" ITEM 448, ASPHALT CONCRETE, SURFACE COURSE TYPE 1 (MEDIUM TRAFFIC), PG. 64-22
2. 3" ITEM 301, ASPHALT CONCRETE BASE
3. 6" ITEM 304, AGGREGATE BASE
4. ITEM 204, SUBGRADE COMPACTION
5. 4 1/2" ITEM 301, ASPHALT CONCRETE BASE

1. ALL TOPSOIL SHALL BE REMOVED FROM SUB GRADE AREAS. ITEM 204 SHALL BE COMPACTED TO NO LESS THAN 98% OF MAX. DRY DENSITY. EXCESS EXCAVATED MATERIAL SHALL BE REMOVED FROM THE SITE.
2. ALL DISTURBED AREAS SHALL BE SEEDED AND MULCHED. SEED MIXTURE REQUIRES THE APPROVAL OF THE CITY ENGINEER.
3. PAVEMENT MARKINGS AND SIGNAGE SHALL CONFORM TO OHIO MANUAL ON UNIFORM TRAFFIC CONTROL DEVICES.
4. SHARED-USE PATHS CROSSING CONCRETE RESIDENTIAL DRIVEWAY APPROACHES SHALL BE 6" PC CONCRETE ACROSS THE WIDTH OF THE DRIVEWAY APPROACH, UNLESS OTHERWISE APPROVED BY THE CITY ENGINEER. SHARED-USE PATHS CROSSING RESIDENTIAL DRIVEWAY APPROACHES SHALL MATCH THE THICKNESS AND CROSS-SECTION OF THE DRIVEWAY APPROACH OR 8" PC CONCRETE, WHICHEVER IS GREATER, AS APPROVED BY THE CITY ENGINEER.
5. FOR GEOMETRIC STANDARDS FOR CURB RAMP REFER TO DUBLIN STD. DWG. PD-01.

Date: 05/01/2014

City of Dublin
ENGINEERING

STANDARD DRAWING

SHARED-USE PATH: STANDARD AND HEAVY DUTY

SHEET 1 OF 1

DRAWING NO. ***RD-06***

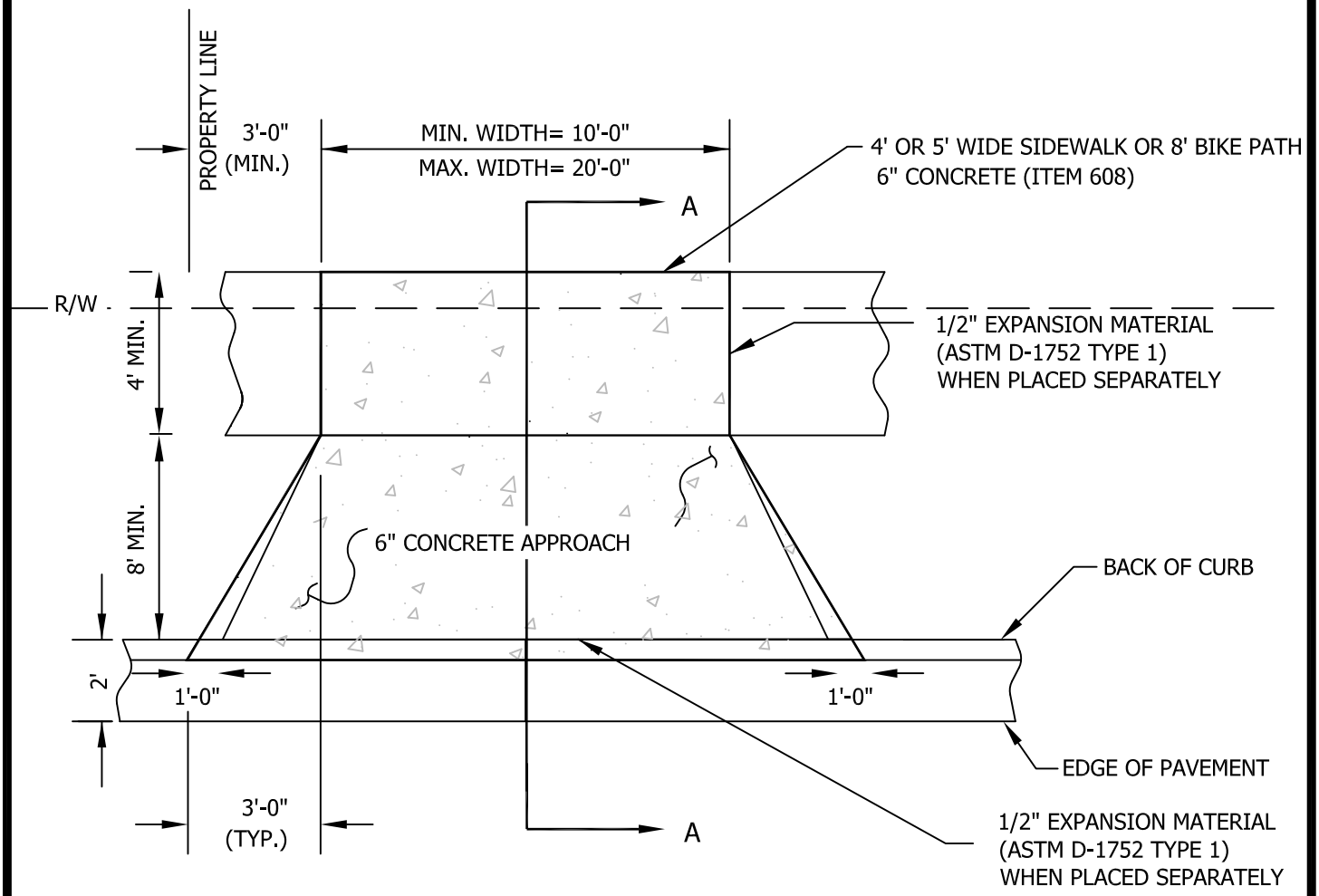

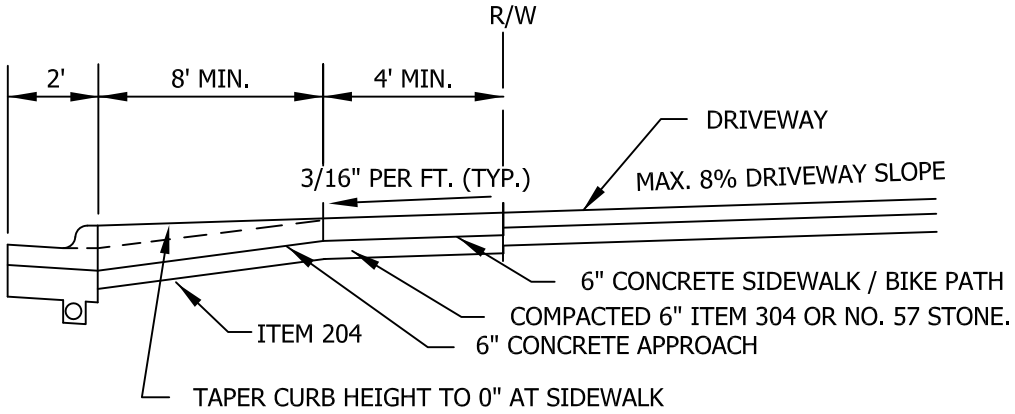

SECTION A-A

Date: 05/01/2014

City of Dublin
ENGINEERING

STANDARD DRAWING

RESIDENTIAL DRIVEWAY APPROACH FOR STREETS WITH CURB AND GUTTER

SHEET 1 OF 9

DRAWING NO. **RD-07**

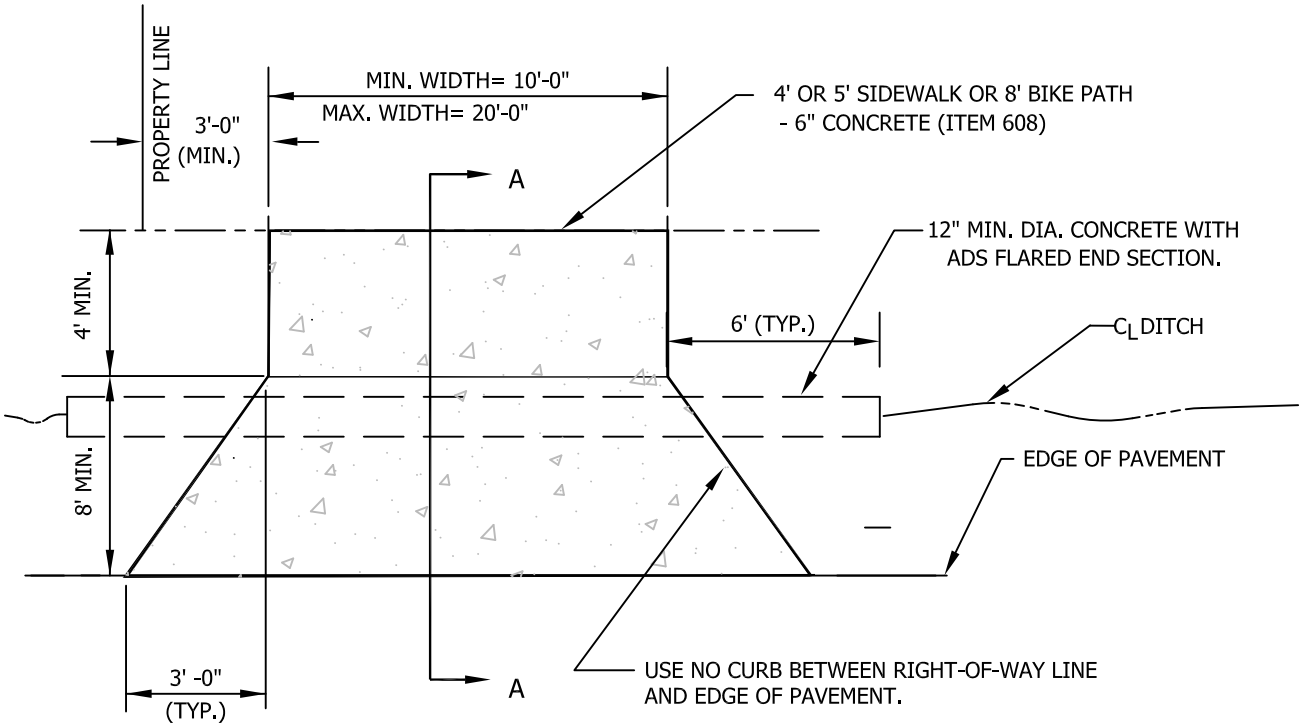

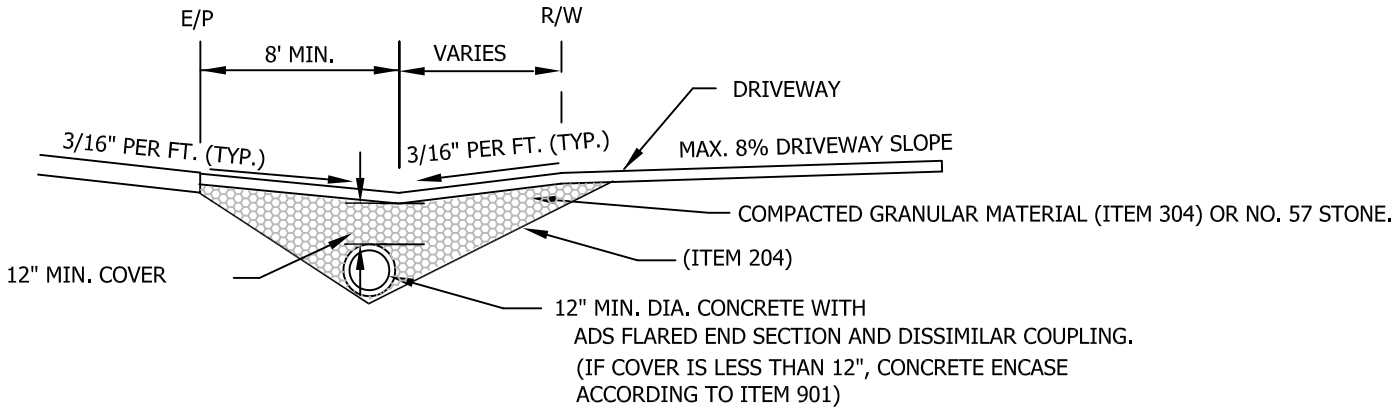

SECTION A-A

NOTE:

1. THE CITY ENGINEER MAY REQUIRE LARGER PIPE TO BE INSTALLED. MINIMUM SLOPE OF PIPE SHALL BE 1 % UNLESS OTHERWISE APPROVED.

2. DRIVE APPROACH SHALL BE 6" CONCRETE OR ALTERNATE ASPHALT AS REQUIRED.
   6" AGGREGATE BASE ITEM 304
   1 1/4" ASPHALT ITEM 402
   1 3/4" ASPHALT ITEM 404

Date: 05/01/2014

City of Dublin
ENGINEERING

STANDARD DRAWING

RESIDENTIAL DRIVEWAY APPROACH FOR STREETS WITHOUT CURB AND GUTTER

DRAWING NO. **RD-07**

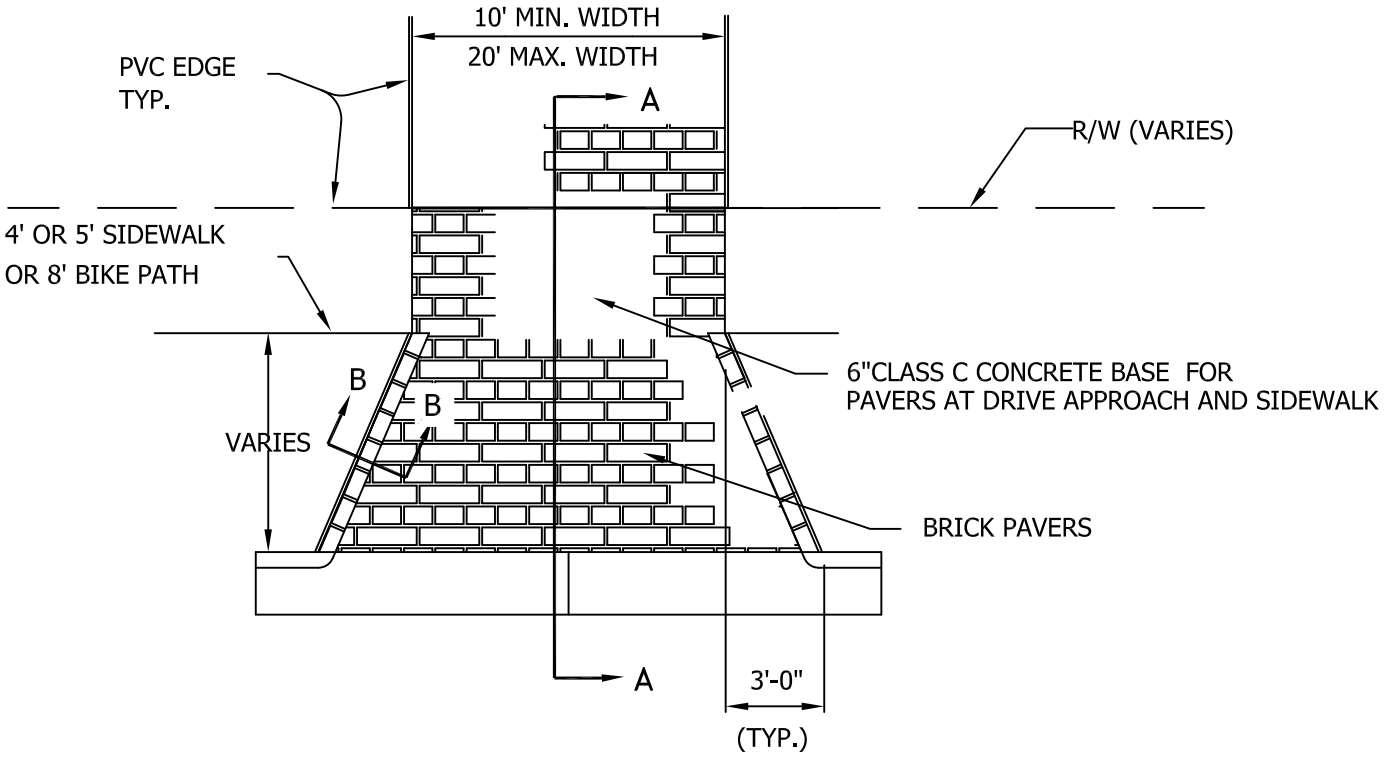

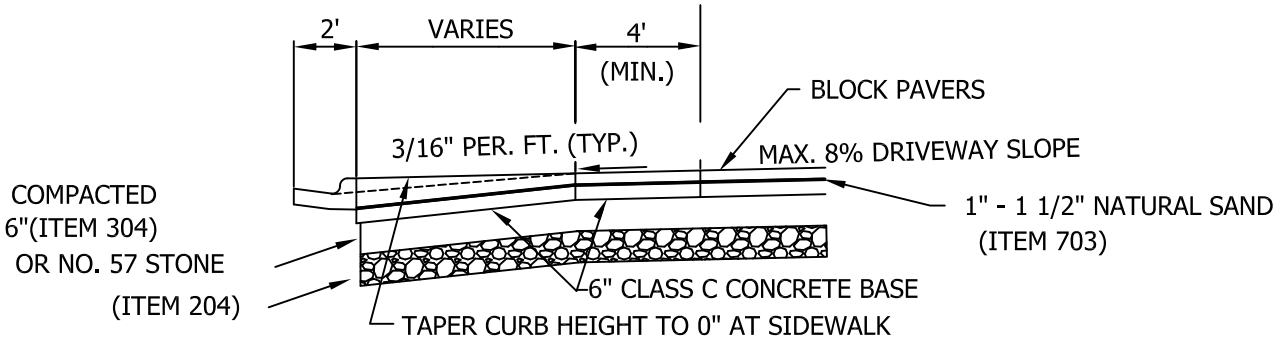

SECTION A-A

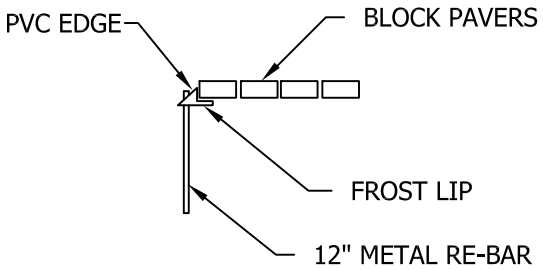

SECTION B-B

Date: 05/01/2014

City of Dublin
ENGINEERING

STANDARD DRAWING

RESIDENTIAL DRIVEWAY AND APPROACH WITH BRICK PAVERS

SHEET 3 OF 9

DRAWING NO. ***RD-07***

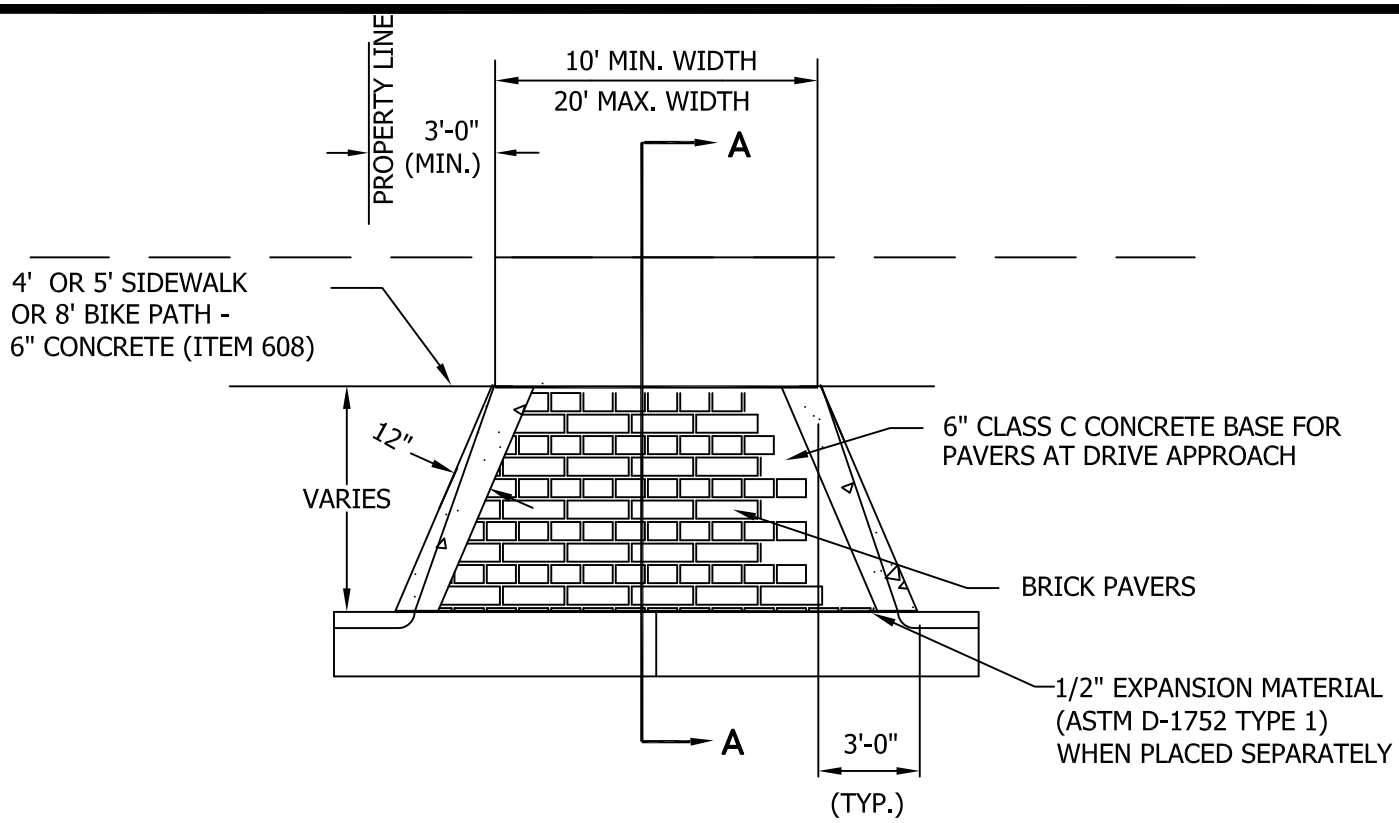

SEE SHEET 5 OF 9 OF CITY OF DUBLIN STANDARD DRAWING RD-07 FOR ADDITIONAL REQUIREMENTS FOR BRICK PAVERS.

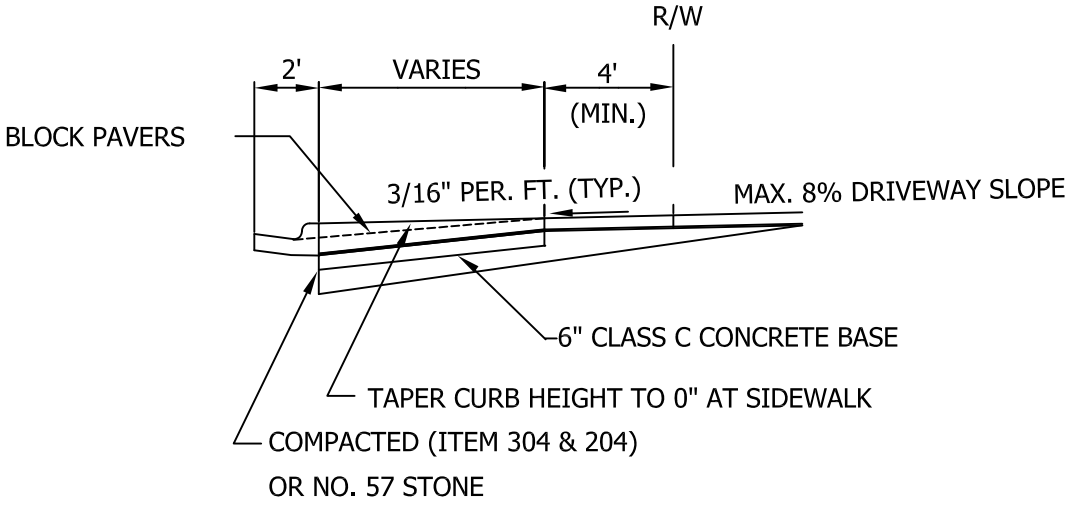

SECTION A–A

Date: 05/01/2014

City of Dublin
ENGINEERING

STANDARD DRAWING

RESIDENTIAL DRIVEWAY APPROACH FOR COMBINATION CONCRETE AND BRICK PAVERS

SHEET 4 OF 9

DRAWING NO. ***RD-07***

1. THE FOLLOWING ARE SPECIFICATIONS WHICH APPLY TO THE SUBSTITUTION OF APPROVED BRICK PAVERS FOR CONCRETE DRIVEWAYS AND DRIVEWAY APPROACHES.

2. PAGES 3 AND 4 OF 9 OF CITY OF DUBLIN STANDARD DRAWING RD-07 DETAIL THE APPROVED PLACEMENT OF BRICK PAVERS.

3. THE WORK SHALL BE INSPECTED PRIOR TO PLACEMENT BY CITY OF DUBLIN CITY ENGINEER OR DESIGNEE(S).

4. THE BRICK PAVERS ON THE GRANULAR BASE SHALL HAVE A PVC FROST LIP/EDGE OR APPROVED EQUIVALENT TO SERVE AS A FORM FOR THE PAVERS.

5. THE CLASS C CONCRETE BASE SHALL BE PROVIDED ACCORDING TO CITY OF COLUMBUS CONSTRUCTION AND MATERIAL SPECIFICATIONS (CCMS).

6. THE GRANULAR BASE SHALL BE PLACED ACCORDING TO CCMS. PAVING SHALL BE PROVIDED ONLY WITH ACCEPTABLE BASE CONDITIONS, AS DETERMINED BY THE CITY OF DUBLIN CITY ENGINEER OR DESIGNEE(S). THIS INCLUDES, BUT IS NOT LIMITED TO, SOFT, WATER SATURATED, FROZEN OR FROST-AFFECTED MATERIAL. UNACCEPTABLE MATERIAL SHALL BE STABILIZED OR REMOVED PRIOR TO PAVING.

7. THE FOLLOWING PAVING MATERIALS HAVE BEEN ACCEPTED FOR USE AS SUBSTITUTES FOR CONCRETE DRIVEWAYS AND DRIVEWAY APPROACHES. ACCEPTANCE IS SUBJECT TO A REVIEW OF MANUFACTURER'S SPECIFICATIONS AND FIELD PERFORMANCE BY THE CITY ENGINEER. ACCEPTANCE OF ALTERNATE MATERIALS IS SUBJECT TO CONTINUAL REVIEW AND MAY BE WITHDRAWN AT THE DISCRETION OF THE CITY ENGINEER.

ACCEPTED MATERIALS:

UNI-STONE PAVING STONES
INTER PAVE CORPORATION
8479 BROADWELL ROAD
CINCINNATI, OHIO 43224
(513) 474-3783

Date: 05/01/2014

City of Dublin
ENGINEERING

STANDARD DRAWING

RESIDENTIAL BRICK PAVER SIDEWALK, DRIVEWAY, AND DRIVEWAY APPROACH

DRAWING NO. ***RD-07***

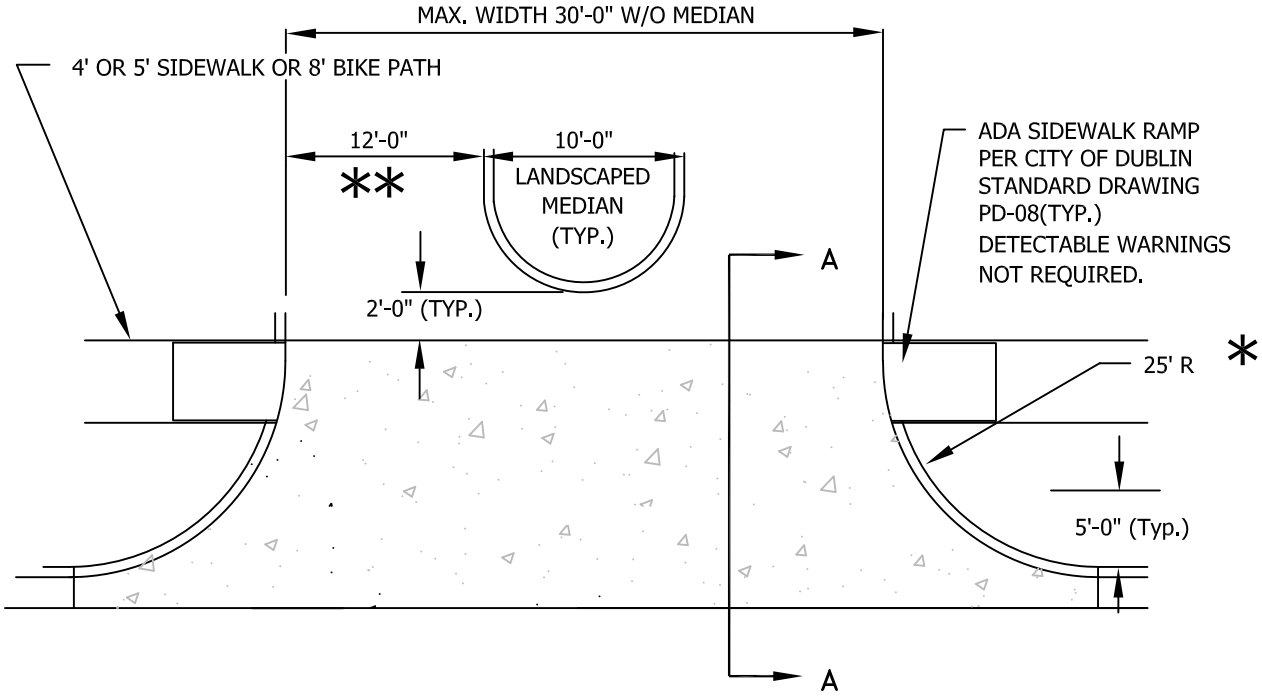

* MINIMUM RADIUS IS 25 FEET UNLESS OTHERWISE APPROVED BY THE CITY ENGINEER.

** MINIMUM LANE WIDTH SHALL BE 12'-0". NUMBER OF LANES REQUIRES APPROVAL BY THE CITY ENGINEER.

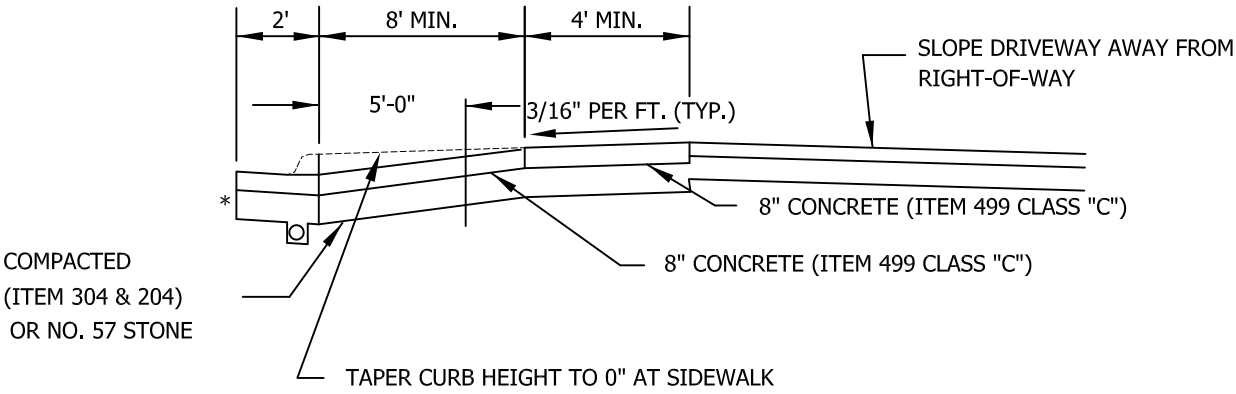

SECTION A-A

DRIVEWAY APPROACH SHALL BE 8" PORTLAND CEMENT CONCRETE OR STRUCTURAL EQUIVALENT AS APPROVED BY THE CITY ENGINEER.

EXISTING CURB AND GUTTER TO BE REMOVED WITHIN THE LIMITS OF DRIVEWAY. APPROACH AND GUTTER TO BE POURED INTEGRAL. MAINTAIN GUTTER SLOPE AND UNDER DRAIN THROUGH THE DRIVEWAY.

* SEE DRAWING RD-02 FOR COMBINATION CONCRETE CURB & GUTTER.

Date: 05/01/2014

City of Dublin
ENGINEERING

STANDARD DRAWING

DIVIDED COMMERCIAL DRIVEWAY APPROACH FOR STREETS WITH CURB & GUTTER

DRAWING NO. ***RD-07***

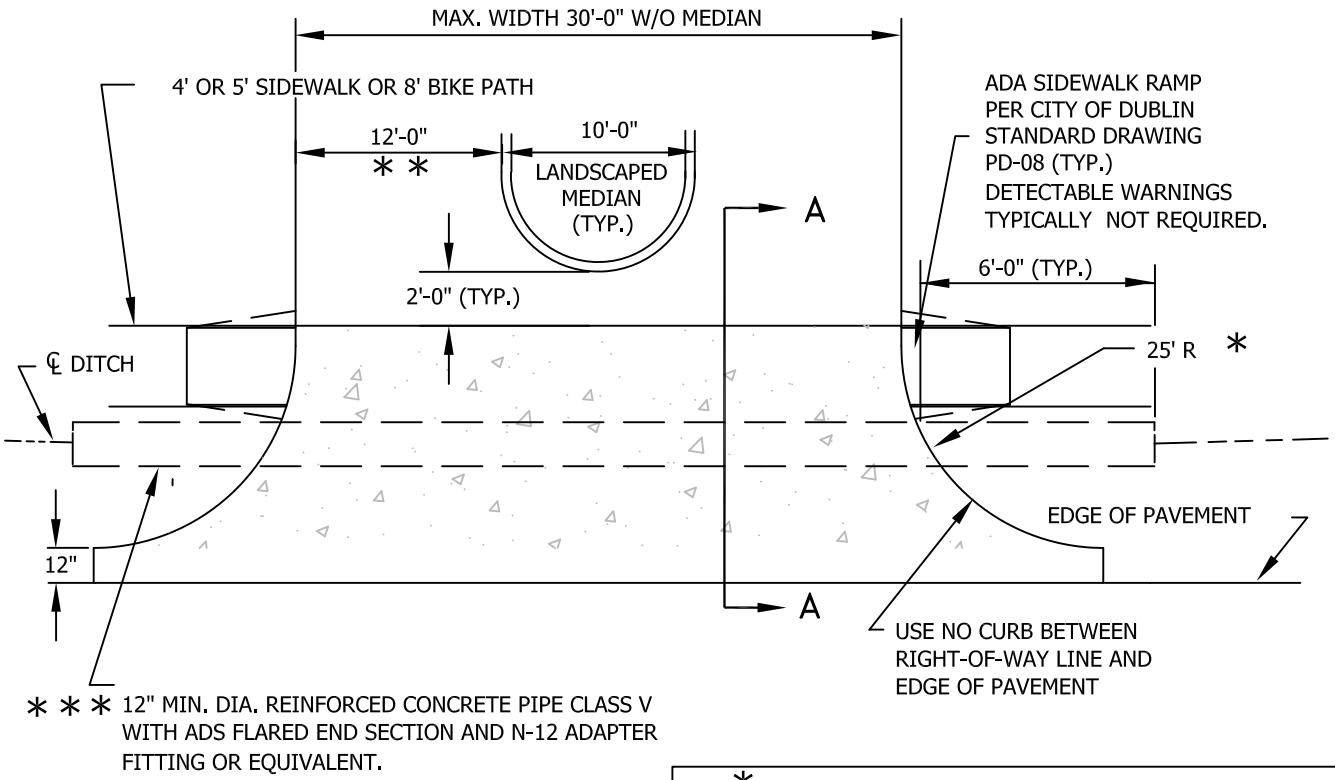

* * * NOTE: THE CITY ENGINEER MAY REQUIRE LARGER PIPE TO BE INSTALLED. MINIMUM SLOPE SHALL BE 1 % UNLESS OTHERWISE APPROVED.

* MINIMUM RADIUS IS 25 FEET UNLESS OTHERWISE APPROVED BY THE CITY ENGINEER.

* * MINIMUM LANE WIDTH SHALL BE 12'-0". NUMBER OF LANES REQUIRES APPROVAL BY THE CITY ENGINEER.

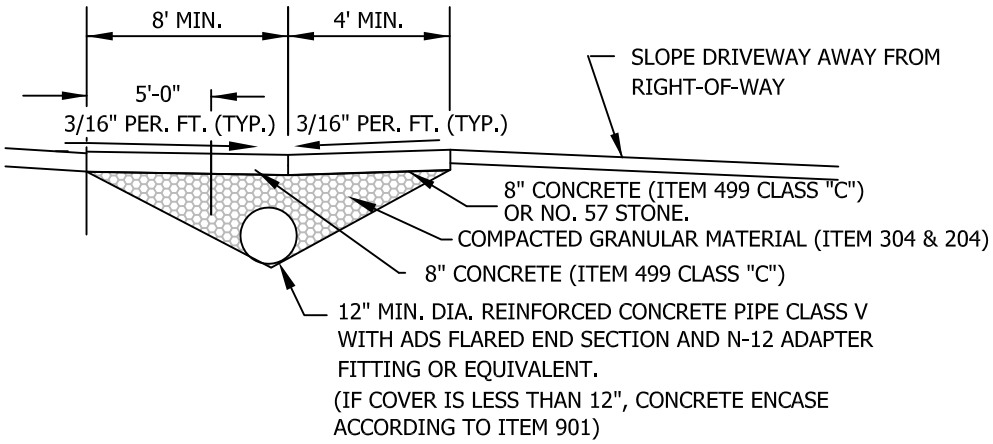

SECTION A-A

DRIVEWAY APPROACH SHALL BE 8" PORTLAND CEMENT CONCRETE OR STRUCTURAL EQUIVALENT AS APPROVED BY THE CITY ENGINEER.

Date: 05/01/2014

City of Dublin ENGINEERING

STANDARD DRAWING

DIVIDED COMMERCIAL DRIVEWAY APPROACH FOR STREETS WITHOUT CURB & GUTTER

DRAWING NO. **RD-07**

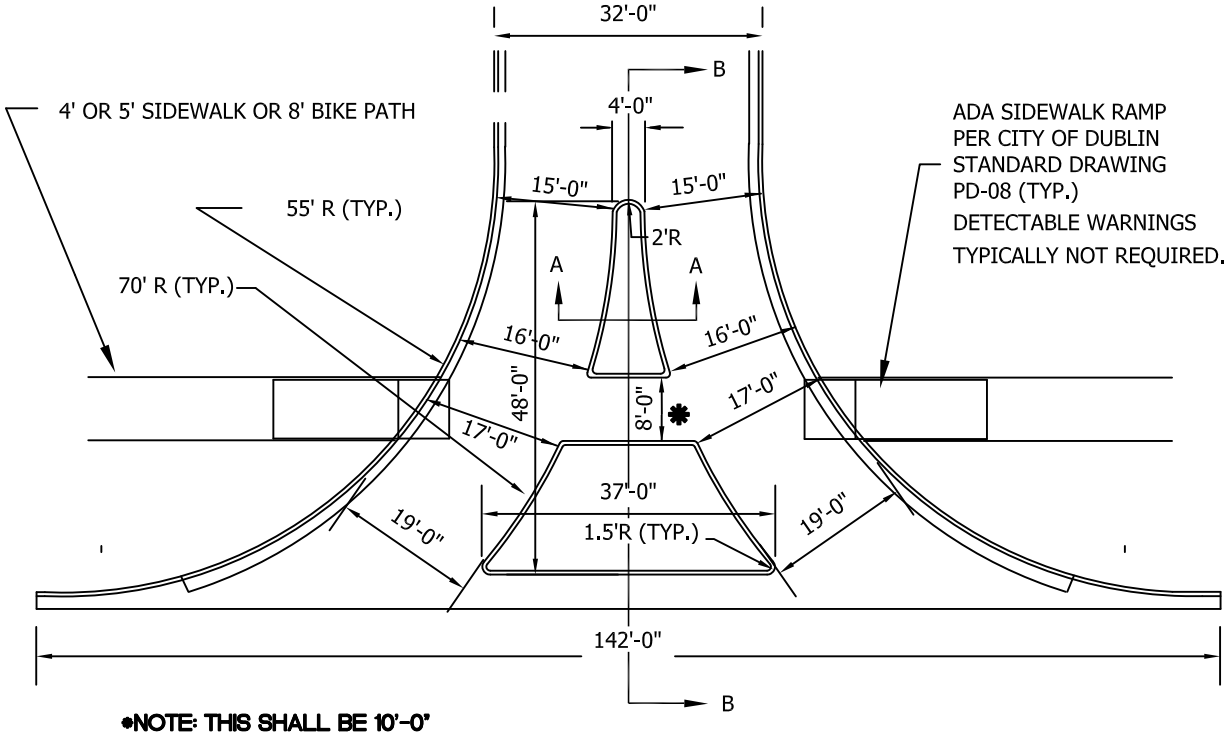

***NOTE: THIS SHALL BE 10'-0" FOR A BIKEPATH CROSSING CROSS SLOPE 1.56%.**

THIS DESIGN ACCOMMODATES WB-40 VEHICLES, AS PRESCRIBED BY AASHTO. IF A LARGER VEHICLE NEEDS ACCOMMODATED A SPECIFIC DESIGN WILL BE REQUIRED.

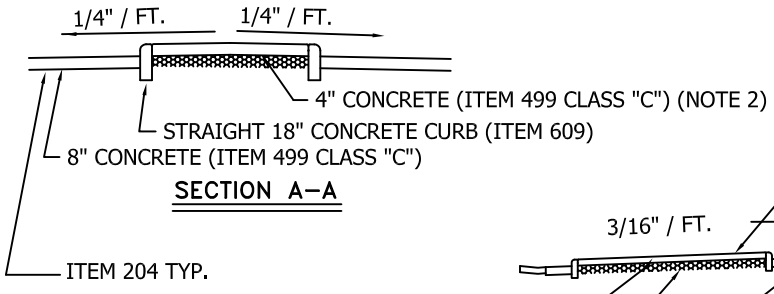

SECTION A–A

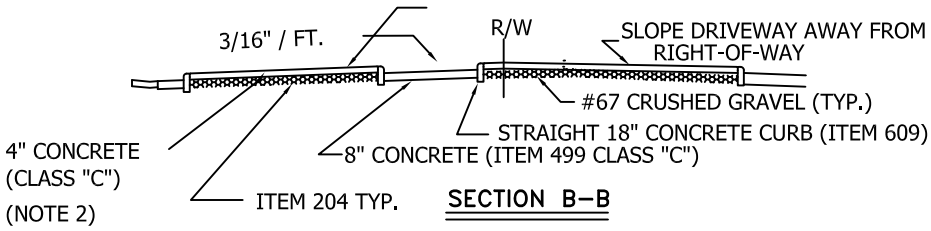

SECTION B–B

1. DRIVEWAY APPROACH SHALL BE 8" PC CONCRETE OR STRUCTURAL EQUIVALENT AS APPROVED BY THE CITY ENGINEER.
2. ISLAND SURFACE IN DRIVEWAY APPROACH MAY BE EITHER 4" PC CONCRETE OR LANDSCAPING VEGETATION WITH A HEIGHT NO GREATER THAN 3 FEET ABOVE THE TOP OF CURB. LANDSCAPING MATERIALS SHALL BE SUBJECT TO THE REVIEW AND APPROVAL OF THE CITY OF DUBLIN DIVISION OF PLANNING. MAINTENANCE OF LANDSCAPING SHALL BE THE RESPONSIBILITY OF THE PROPERTY OWNER.
3. EXISTING CURB AND GUTTER TO BE REMOVED WITHIN THE LIMITS OF DRIVEWAY. APPROACH AND GUTTER TO BE POURED INTEGRAL. MAINTAIN GUTTER SLOPE AND UNDER DRAIN THROUGH DRIVEWAY.

* SEE DRAWING RD-02 FOR COMBINATION CONCRETE CURB & GUTTER.

Date: 05/01/2014

City of Dublin
ENGINEERING

STANDARD DRAWING

RIGHT IN, RIGHT OUT COMMERCIAL APPROACH

DRAWING NO. ***RD-07***

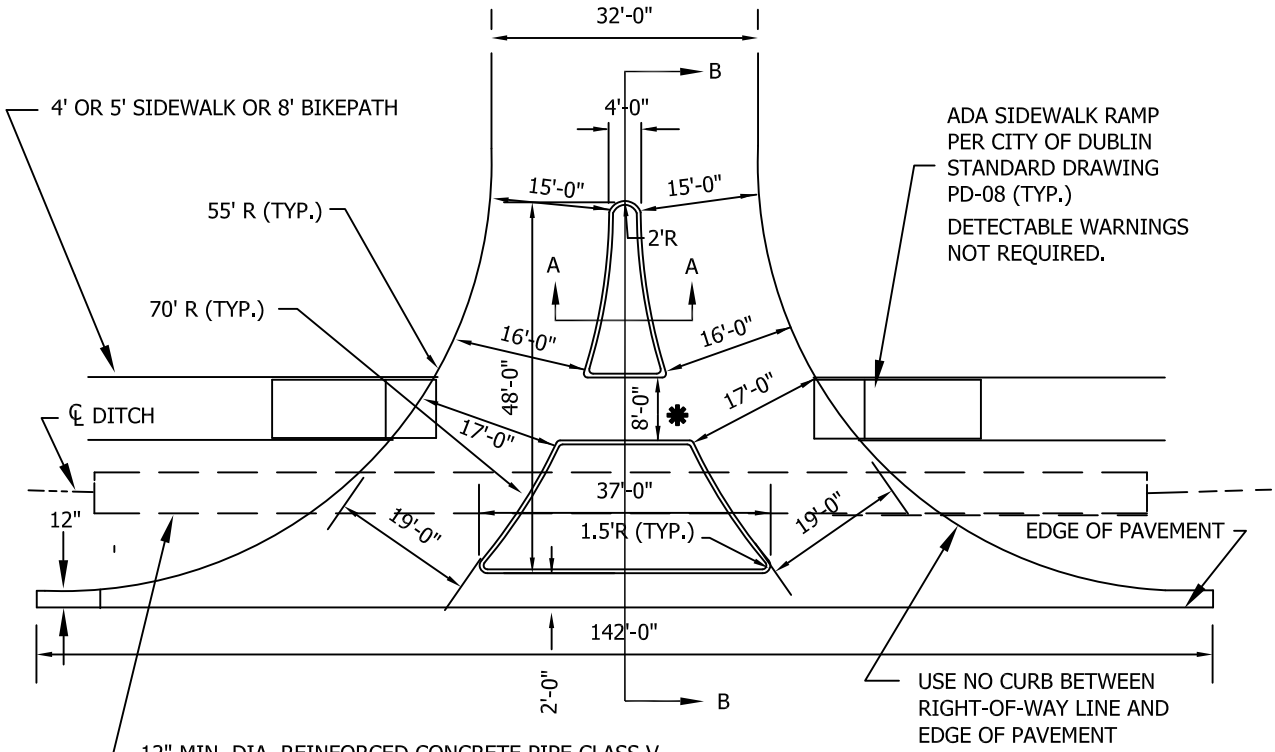

*NOTE: THIS SHALL BE 10'-0" FOR A BIKEPATH CROSSING CROSS SLOPE 1.56%.

THIS DESIGN ACCOMMODATES WB-40 VEHICLES, AS PRESCRIBED BY AASHTO. IF A LARGER VEHICLE NEEDS TO BE ACCOMMODATED A SPECIFIC DESIGN WILL BE REQUIRED.

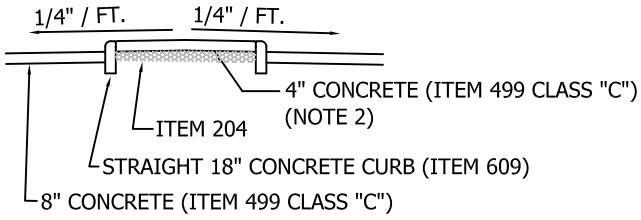

SECTION A-A

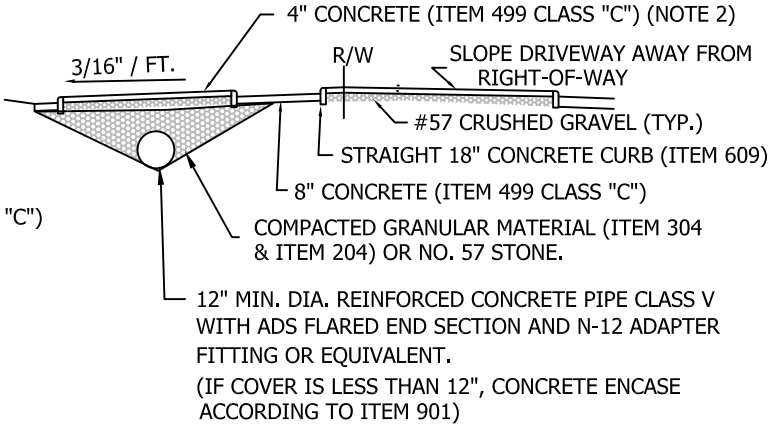

SECTION B-B

1. DRIVEWAY APPROACH SHALL BE 8" PC CONCRETE OR STRUCTURAL EQUIVALENT AS APPROVED BY THE CITY ENGINEER.
2. ISLAND SURFACE IN DRIVEWAY APPROACH MAY BE EITHER 4" PC CONCRETE OR LANDSCAPING VEGETATION WITH A HEIGHT NO GREATER THAN 3 FEET ABOVE THE TOP OF CURB. LANDSCAPING MATERIALS SHALL BE SUBJECT TO THE REVIEW AND APPROVAL OF THE CITY OF DUBLIN DIVISION OF PLANNING. MAINTENANCE OF LANDSCAPING SHALL BE THE RESPONSIBILITY OF THE PROPERTY OWNER.

Date: 05/01/2014

City of Dublin
ENGINEERING

STANDARD DRAWING

RIGHT IN, RIGHT OUT COMMERCIAL APPROACH WITHOUT CURB & GUTTER

DRAWING NO. **RD-07**

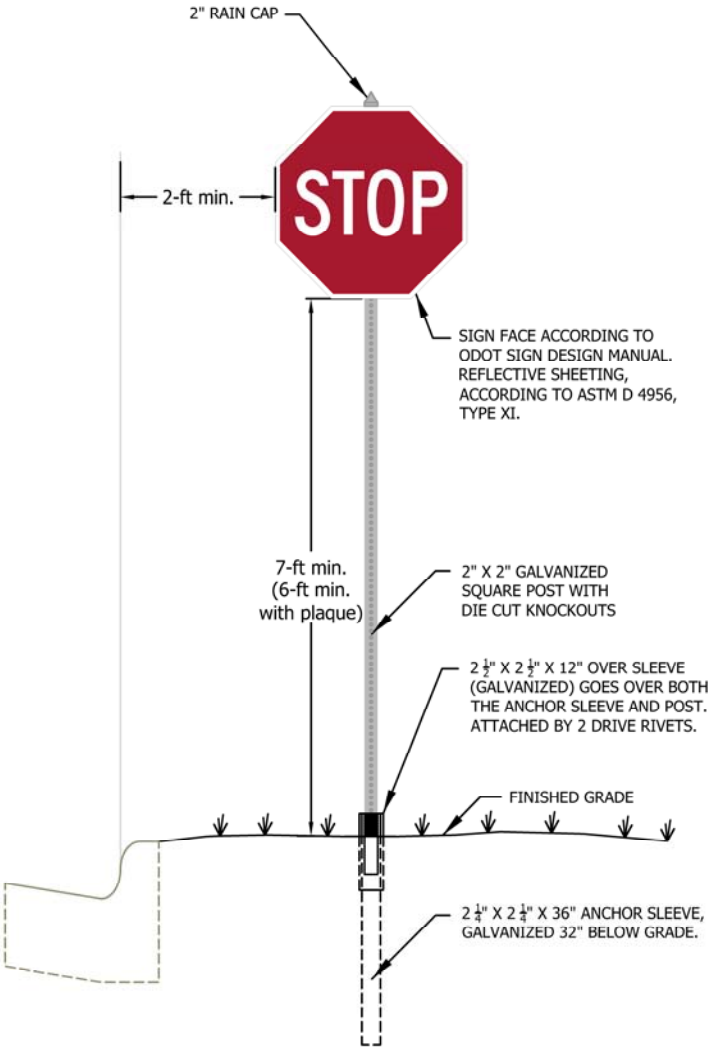

STANDARD SIGN

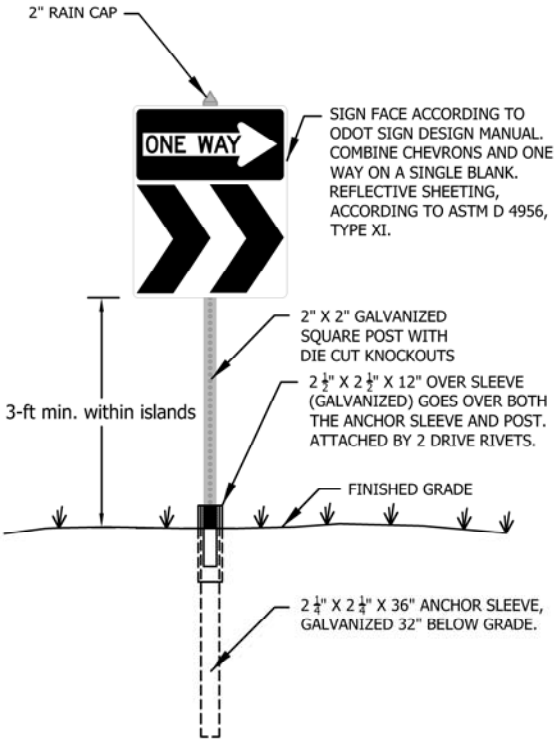

STANDARD SIGN WITHIN ISLAND

Date: 04/10/2015

City of Dublin
ENGINEERING

STANDARD DRAWING

TYPICAL STREET SIGNS

SHEET 1 OF 2

DRAWING NO. ***RD-10***

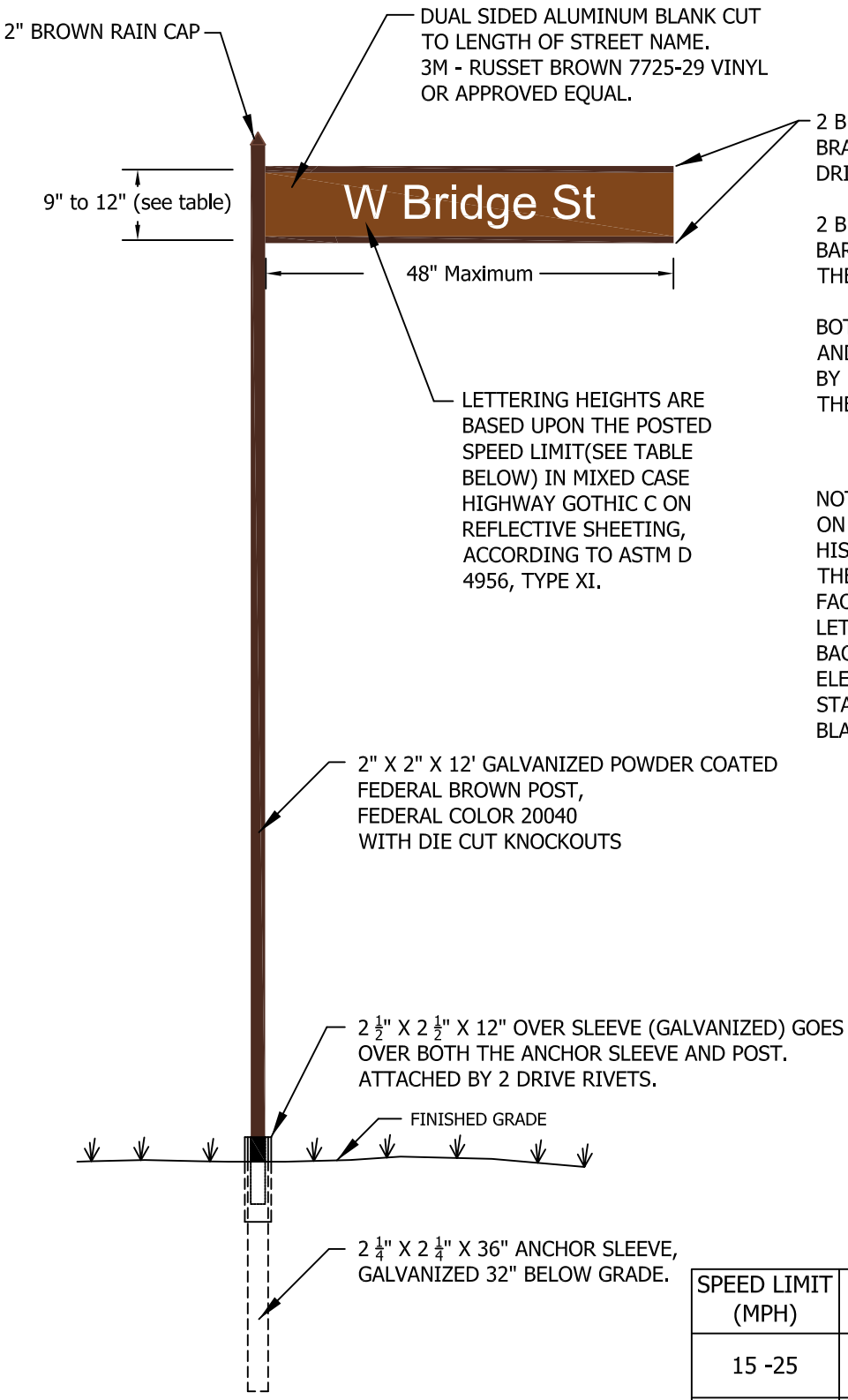

SPEED LIMIT (MPH)	LETTERING HEIGHT (IN)	BLANK HEIGHT (IN)
15 -25	4	9
30 -40	6	12
45+	8	12

STANDARD STREET NAME SIGN

Date: 04/10/2015

City of Dublin
ENGINEERING

STANDARD DRAWING

TYPICAL STREET SIGNS

SHEET 2 OF 2

DRAWING NO. ***RD-10***

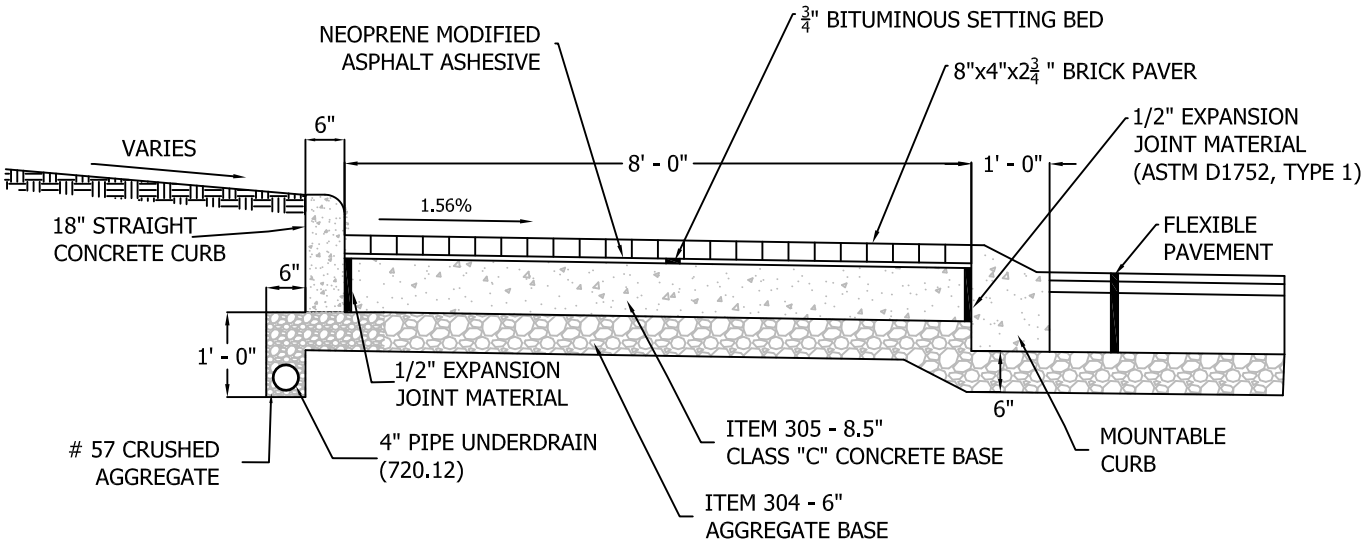

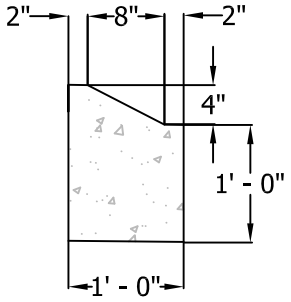

MOUNTABLE CURB DETAIL

NOTES:

1.) THE PAVERS SHALL BE REGIMENTAL FULL RANGE WITH A CHAMFERED EDGE AND SPACER LUGS, 8″ x 4″ x 2 ¾″, MADE BY BELDEN BRICK COMPANY, CANTON, OHIO, LAID IN A RUNNING BOND PATTERN.

2.) ALL JOINTS SHALL BE FILLED WITH A POLYMERIC SAND. SAND SHALL BE ALLIANCE GATOR MAXX POLYMERIC SAND FOR OVERLAYS AND SLATE GREY IN COLOR OR AN APPROVED EQUAL.

3.) FURNISH NEOPRENE MODIFIED ASPHALT ADHESIVE THAT CONTAINS 2% GRADE WM1 NEOPRENE, OXIDIZED ASPHALT WITH A 150 DEGREE SOFTENING POINT (77 PENETRATION), AND 10% LONG-FIBERED INERT MATERIAL, AS SUPPLIED BY SEIDEL COMPANY, INC., NEWBURYPORT, MA, (617) 649-6740; HASTINGS PAVEMENT COMPANY, INC., LAKE SUCCESS, NY, (516) 379-3500; OR APPROVED EQUAL.

4.) FURNISH ASPHALT CEMENT CONFORMING TO ASTM D 3381, PG64-22. FINE AGGREGATE SHALL BE NATURAL SAND AND/OR STONE SAND COMPOSED OF HARD, DURABLE, UNCOATED PARTICLES, FREE FROM CLAY, SILT, ORGANIC MATERIAL, OR OTHER DELETERIOUS SUBSTANCES. ALL SAND SHALL BE UNIFORMLY GRADED AND PASS A NO. 4 SIEVE, MEETING THE REQUIREMENTS OF ASTM C 136. THE DRIED FINE AGGREGATE SHALL BE MIXED WITH HOT ASPHALT CEMENT AT THE PLANT AND HEATED TO APPROXIMATELY 300 DEGREES (F). APPROXIMATE MATERIAL PROPORTIONS SHALL BE 7% ASPHALT CEMENT AND 93% FINE AGGREGATE; OR 140 LBS ASPHALT TO 1,860 LBS FINE AGGREGATE PER TON.

Date: 05/01/2014

City of Dublin
ENGINEERING

STANDARD DRAWING

ROUNDABOUT TRUCK APRON DETAIL

SHEET 1 OF 1

DRAWING NO. ***RD-13***

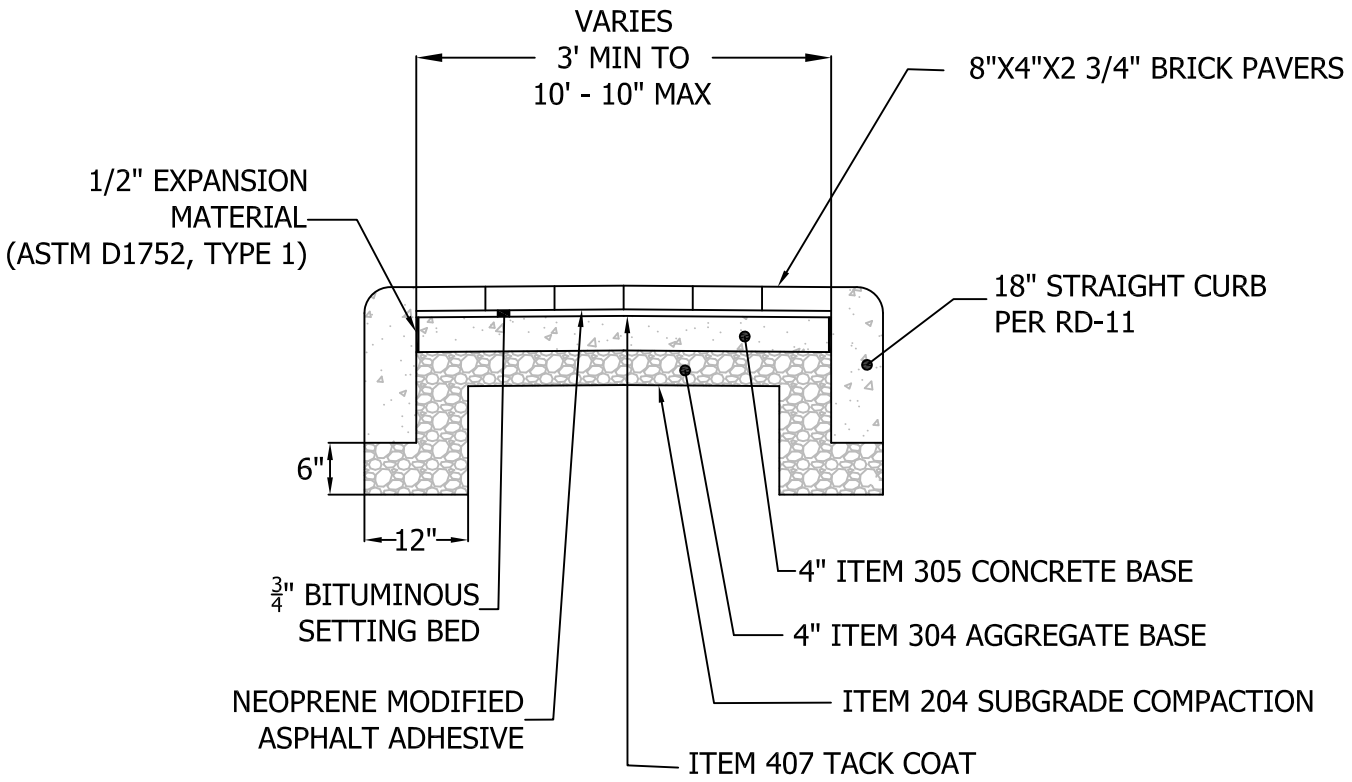

NOTES:

1.) THE PAVERS SHALL BE REGIMENTAL FULL RANGE WITH A CHAMFERED EDGE AND SPACER LUGS, 8″ x 4″ x 2 ¾″, MADE BY BELDEN BRICK COMPANY, CANTON, OHIO, LAID IN A RUNNING BOND PATTERN.

2.) ALL JOINTS SHALL BE FILLED WITH A POLYMERIC SAND. SAND SHALL BE ALLIANCE GATOR MAXX POLYMERIC SAND FOR OVERLAYS AND SLATE GREY IN COLOR OR AN APPROVED EQUAL.

3.) FURNISH NEOPRENE MODIFIED ASPHALT ADHESIVE THAT CONTAINS 2% GRADE WM1 NEOPRENE, OXIDIZED ASPHALT WITH A 150 DEGREE SOFTENING POINT (77 PENETRATION), AND 10% LONG-FIBERED INERT MATERIAL, AS SUPPLIED BY SEIDEL COMPANY, INC., NEWBURYPORT, MA, (617) 649-6740; HASTINGS PAVEMENT COMPANY, INC., LAKE SUCCESS, NY, (516) 379-3500; OR APPROVED EQUAL.

4.) FURNISH ASPHALT CEMENT CONFORMING TO ASTM D 3381, PG64-22. FINE AGGREGATE SHALL BE NATURAL SAND AND/OR STONE SAND COMPOSED OF HARD, DURABLE, UNCOATED PARTICLES, FREE FROM CLAY, SILT, ORGANIC MATERIAL, OR OTHER DELETERIOUS SUBSTANCES. ALL SAND SHALL BE UNIFORMLY GRADED AND PASS A NO. 4 SIEVE, MEETING THE REQUIREMENTS OF ASTM C 136. THE DRIED FINE AGGREGATE SHALL BE MIXED WITH HOT ASPHALT CEMENT AT THE PLANT AND HEATED TO APPROXIMATELY 300 DEGREES (F). APPROXIMATE MATERIAL PROPORTIONS SHALL BE 7% ASPHALT CEMENT AND 93% FINE AGGREGATE; OR 140 LBS ASPHALT TO 1,860 LBS FINE AGGREGATE PER TON.

Date: 05/01/2014

City of Dublin
ENGINEERING

STANDARD DRAWING

BRICK PAVER MEDIAN DETAIL

SHEET 1 OF 1

DRAWING NO. ***RD-14***

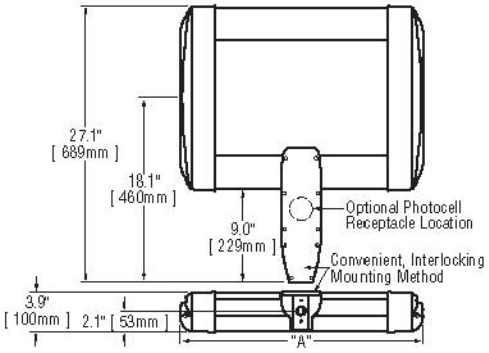

# of LEDs	Dim. "A"
20	12.06"
40	12.06"
60	14.06"
80	16.06"
100	18.06"
120	20.06"
140	22.06"
160	24.06"
180	26.06"
200	28.06"
220	30.06"
240	32.06"

LIGHTING DESIGN CRITERIA
MIN = 0.4 fc
AVG/MIN RATIO = 3:1
MAX/MIN RATIO = 6:1
CROSSWALK AREA = 1.1-1.3 fc

GENERAL DESCRIPTION - LIGHT EMITTING DIODE (LED), TYPE II, III, IV OR V CUTOFF (AS SPECIFIED ON THE CONSTRUCTION DRAWINGS), ONE-PIECE EXTRUDED ARM. OPERATING VOLTAGE SHALL BE ** VOLTS, SINGLE PHASE.

** VOLTAGE REQUIREMENTS ARE TO BE SPECIFIED ON PLANS.

DISTRIBUTION - IES NEMA TYPE II, III, IV OR V CUTOFF.

APPROVED MANUFACTURER
- Cree LED: ARE-EDG-2M-DA-##-D-**-BZ-525-40K
- Cree LED: ARE-EDG-3M-DA-##-D-**-BZ-525-40K
- Cree LED: ARE-EDG-4M-DA-##-D-**-BZ-525-40K
- Cree LED: ARE-EDG-5M-DA-##-D-**-BZ-525-40K

NUMBER OF LED's TO BE SPECIFIED ON PLANS.
** VOLTAGE REQUIREMENTS ARE TO BE SPECIFIED ON PLANS.

CABLE – PROVIDE #10 XHHW, STRANDED COPPER 600V, 90 DEGREES CELSIUS CONDUCTORS. WIRE TO LUMINAIRE. SECURE TO LUMINAIRE ARM WITH CABLE GRIP PROVIDED WITH LUMINAIRE. PROVIDE ADEQUATE LENGTH TO EXTEND MIN. 2 FEET OUT OF HAND HOLE.

EXECUTION – ALL LUMINAIRES SHALL BE PLUMB AND LEVEL. ALL LAMPS SHALL BE OPERATIONAL PRIOR TO INSPECTION. ALL SURFACES SHALL BE CLEANED OF DIRT, DEBRIS, ETC. FREE OF SCRATCHES, DENTS, ETC.

METHOD OF MEASUREMENT - SEE ODOT SPECIFICATIONS SECTION 625.

BASIS OF PAYMENT – SEE ODOT SPECIFICATIONS SECTION 625.

Date: 5/1/2014

City of Dublin
ENGINEERING

STANDARD DRAWING

LUMINAIRE

SHEET 1 OF 1

DRAWING NO. ***SL-01***

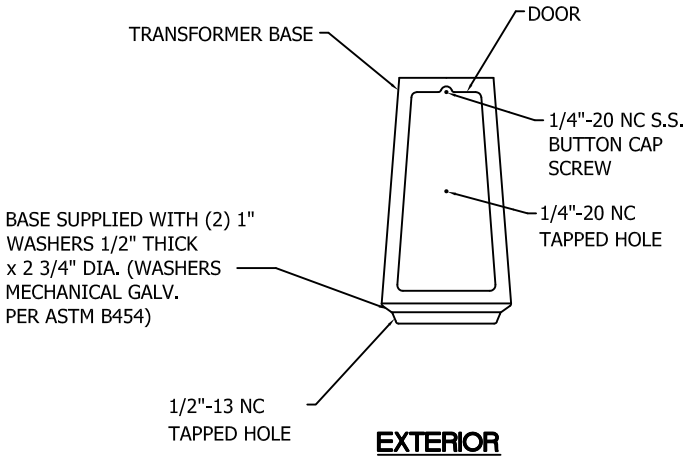

EXTERIOR

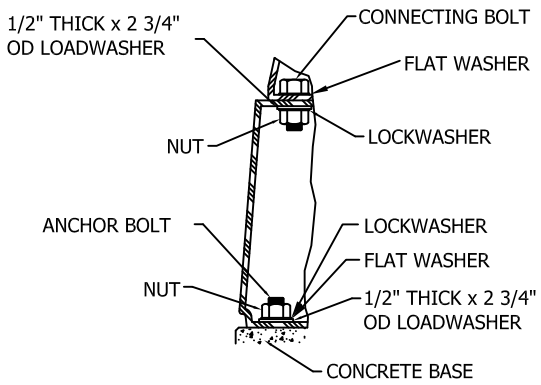

INTERIOR

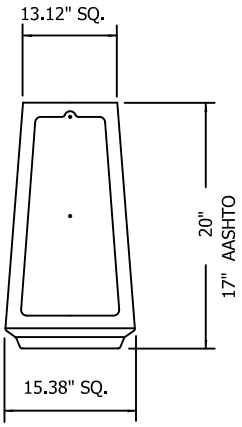

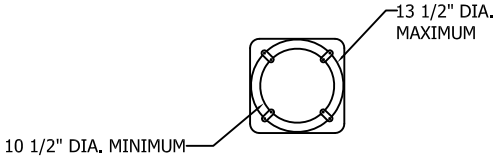

TOP VIEW

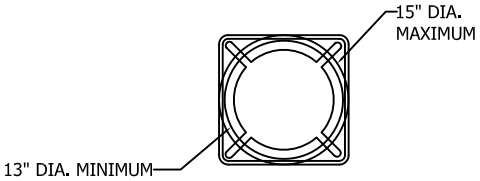

BOTTOM VIEW

TRANSFORMER BASE - PROVIDE A ONE-PIECE CAST ALUMINUM ALLOY 356 BREAKAWAY TRANSFORMER BASE. MINIMUM 20" HIGH WITH A REMOVABLE MATCHING ACCESS DOOR HELD IN PLACE WITH STAINLESS STEEL SCREWS. THE DOOR SHALL BE A MINIMUM OF 13" HIGH, 8" WIDE AT TOP AND 9" AT BOTTOM. DOOR SHALL BE FIELD POSITIONED ON SIDE AWAY FROM ROADWAY. THE BASE SHALL BE DESIGNED TO BE ATTACHED WITH ANCHOR BOLTS PROVIDED WITH A TEMPLATE FOR MOUNTING IN A CONCRETE BASE. PROVIDE A GALVANIZED STEEL HEX-HEAD MACHINE BOLT WITH NUTS AND LOCKWASHERS TO ATTACH POLE BASE FLANGE TO TRANSFORMER BASE. PROVIDE LOAD DISTRIBUTION NON-CORROSIVE WASHERS TO EQUALIZE BOLT FORCES AT FLANGE MATING SURFACES.

GROUNDING - EACH TRANSFORMER BASE SHALL CONTAIN AN INTERNAL LUG WITH DRILLED HOLE FOR ATTACHING A GROUND CONDUCTOR.

Date: 5/1/2014

City of Dublin
ENGINEERING

STANDARD DRAWING

TRANSFORMER BASE

SHEET 1 OF 2

DRAWING NO. ***SL-02***

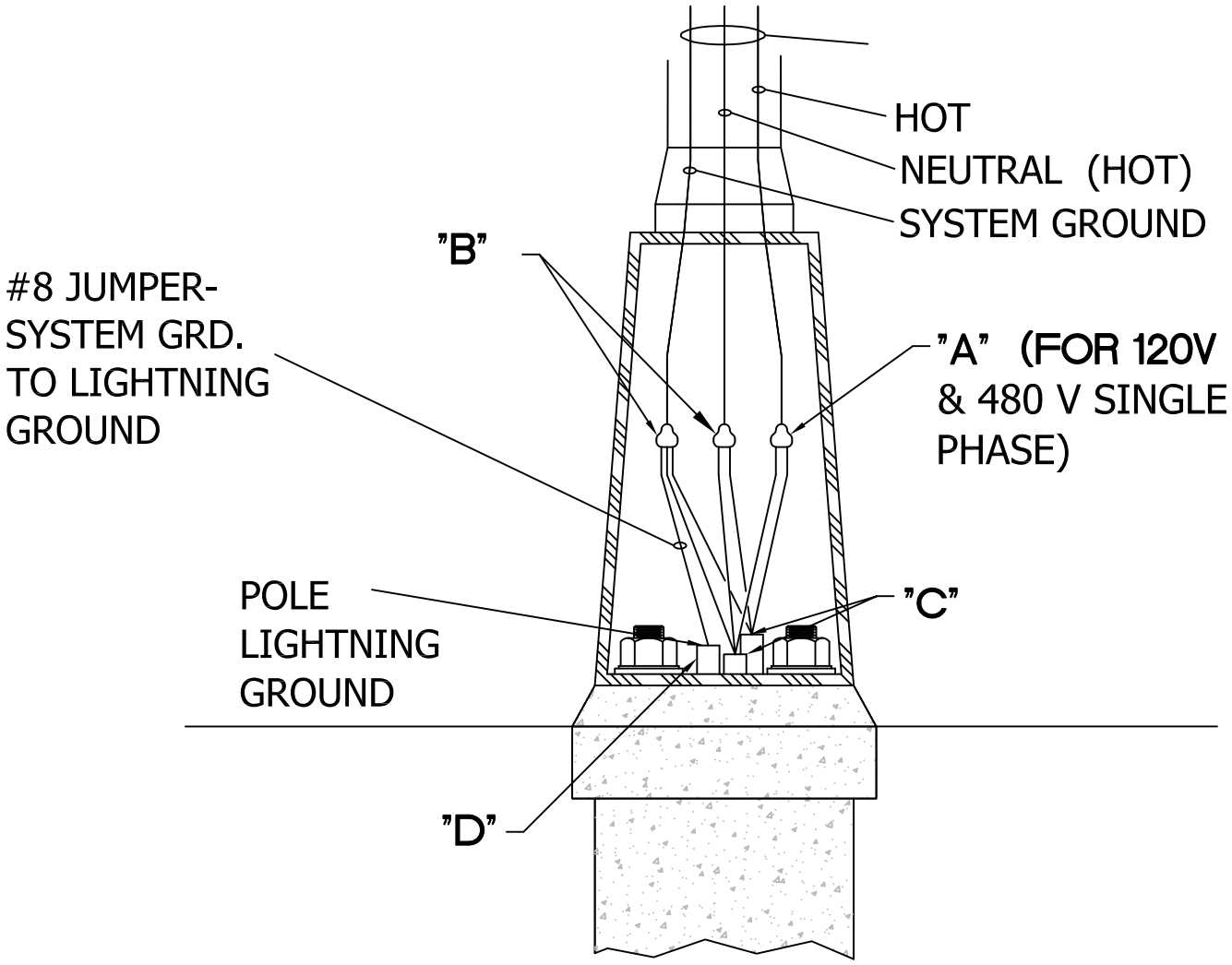

CONNECTIONS

"A" FUSED - INLINE Y CONNECTOR KIT TYPE II WITH WATERPROOF BOOTS AND BREAKAWAY RECEPTACLE. FUSE AT 5 AMPS, ELASTIMOLD STYLE 82 SERIES OR HOMAC FY SERIES, BUSS KTK-R FUSE. (SINGLE PHASE =1, DOUBLE PHASE = 2 PER POLE)

"B" UNFUSED-INLINE 7 CONNECTOR KIT TYPE III WITH WATERPROOF BOOTS AND BREAKAWAY RECEPTACLE, ELASTIMOLD 83 SERIES OR HOMAC DY SERIES. (SINGLE PHASE =2, DOUBLE PHASE = 1 PER POLE)

"C" PROVIDE MOLDED PLASTIC OR RUBBER CAPPING DEVICE THAT ONLY PERMITS WIRE PASS THROUGH WHILE PREVENTING DIRT, WATER, ETC. ENTRY.

"D" POLE LIGHTNING GROUND LUG UNINSULATED COPPER COMPRESSION TERMINAL UL LISTED FOR 600V. SIZE FOR WIRE SPECIFIED. DRILL, TAP, AND BOLT TO TRANSFORMER BASE BURNDY YA SERIES. BOND SYSTEM GROUND TO LIGHTNING ROD GROUND.

PROVIDE 2' SLACK IN ALL WIRING TO BRING CONNECTORS AND FUSE HOLDERS OUT THRU HANDHOLE.

Date: 5/1/2014

City of Dublin
ENGINEERING

STANDARD DRAWING

TRANSFORMER BASE

SHEET 2 OF 2

DRAWING NO. ***SL-02***

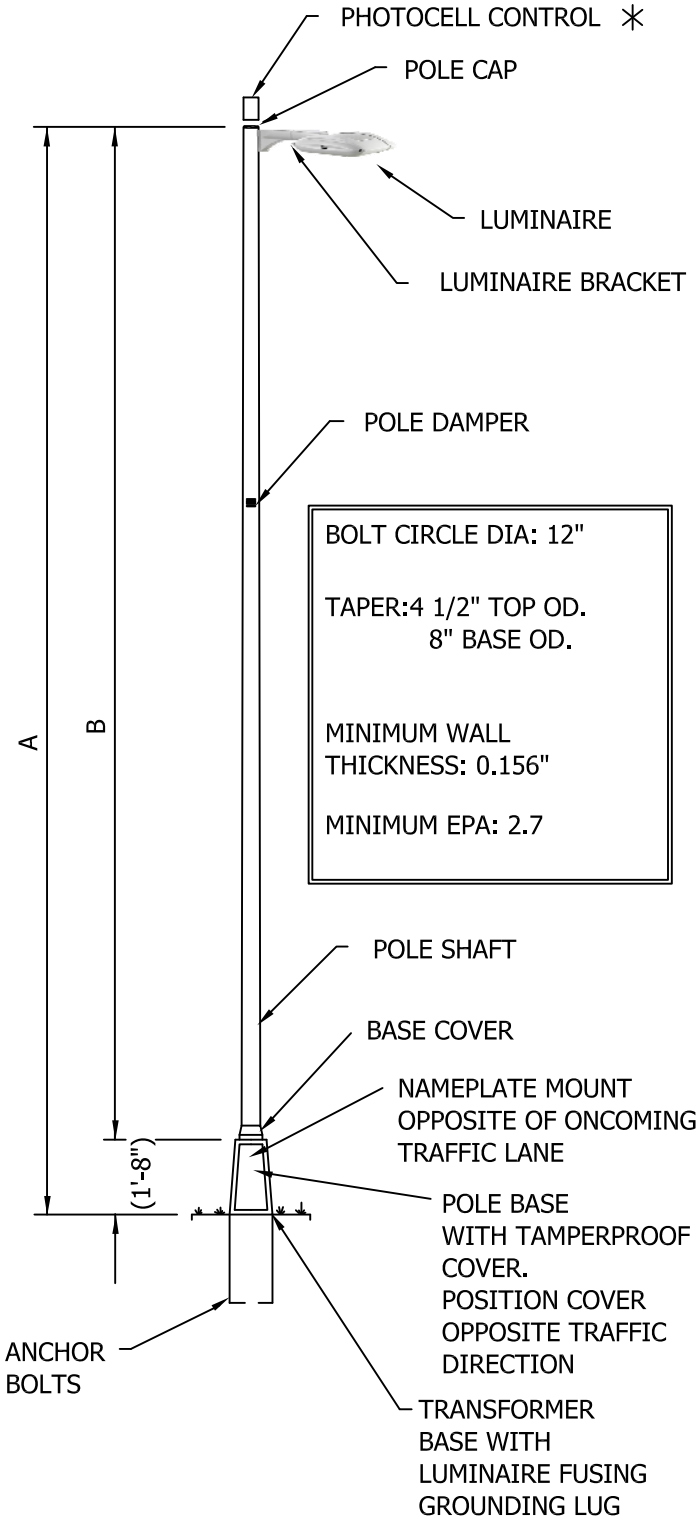

* ONE PHOTOCELL REQUIRED PER CIRCUIT

POLE DIMENSION	A	B
TYPE 1	36'-8"	35'-0"
TYPE 2	31'-8"	30'-0"
TYPE 3	26'-8"	25'-0"

GENERAL DESCRIPTION - ALUMINUM ROUND TAPERED ANCHOR BASE WITH FINISH: COLOR SHALL BE FEDERAL STANDARD #595-C, COLOR 20040 AS APPROVED BY THE CITY ENGINEER. THE PAINT SHALL BE A POWDER PAINT FINISHED TO A GLOSS OF 35% (AT 60 DEGREES) SPUN ALUMINUM FINISH WITH POLE CAP, TRANSFORMER BASE, BASE COVER AND BOLT COVERS.

POLE CAP - PROVIDE AN ORNAMENTAL ALUMINUM ALLOY CAP FASTENED VIA STAINLESS STEEL SCREWS.

POLE DAMPER - PROVIDE A SECOND MODE VIBRATION DAMPER ATTACHED TO MIDPOINT VIA WELDING. LOCATE INSIDE POLE. FACTORY INSTALLED.

BASE FLANGE - PROVIDE A ONE PIECE CAST SOCKET OF ALUMINUM ALLOY 356 THE FLANGE SHALL BE JOINED TO THE SHAFT BY MEANS OF CONTINUOUS WELD EXTERNALLY AND INTERNALLY.

BASE COVER - PROVIDE BOLT COVERS OF ALUMINUM ALLOY 43 AND STAINLESS STEEL SCREWS FOR ATTACHMENT.

MISCELLANEOUS HARDWARE - ALL NUTS, BOLTS, AND WASHERS USED IN THE FABRICATION OF THE POLE SHALL BE GRADE 18-8 STAINLESS STEEL EXCEPT FOR ANCHORAGE HARDWARE.

WRAPPING - EACH POLE SHAFT SHALL BE WRAPPED WITH PROTECTIVE PAPER SECURED IN PLACE. ALL PARTS SHALL BE BOXED AND/OR BANDED.

POLE SHAFT - THE SHAFT SHALL BE ONE-PIECE SEAMLESS WITH A MINIMUM WALL THICKNESS OF 0.156 INCHES, ROUND TAPERED TUBE OF ALLOY 6063 AND SHALL BE FULL-LENGTH TEMPERED AFTER WELDING ON TOP BASE FLANGE TO PRODUCE THE T6 TEMPER. THE ENTIRE POLE ASSEMBLY SHALL BE RATED @ 90 MPH WITH A 30% GUST FACTOR FOR AN EPA. MINIMUM OF 2.7 TEMPLATE CUT FOR LUMINAIRE.

APPROVED MANUFACTURER - HAPCO SERIES 52, LEXINGTON/VALMONT OR APPROVED EQUAL.

Date: 5/1/2014

City of Dublin
ENGINEERING

STANDARD DRAWING

LIGHT POLE

SHEET 1 OF 1

DRAWING NO. ***SL-03***

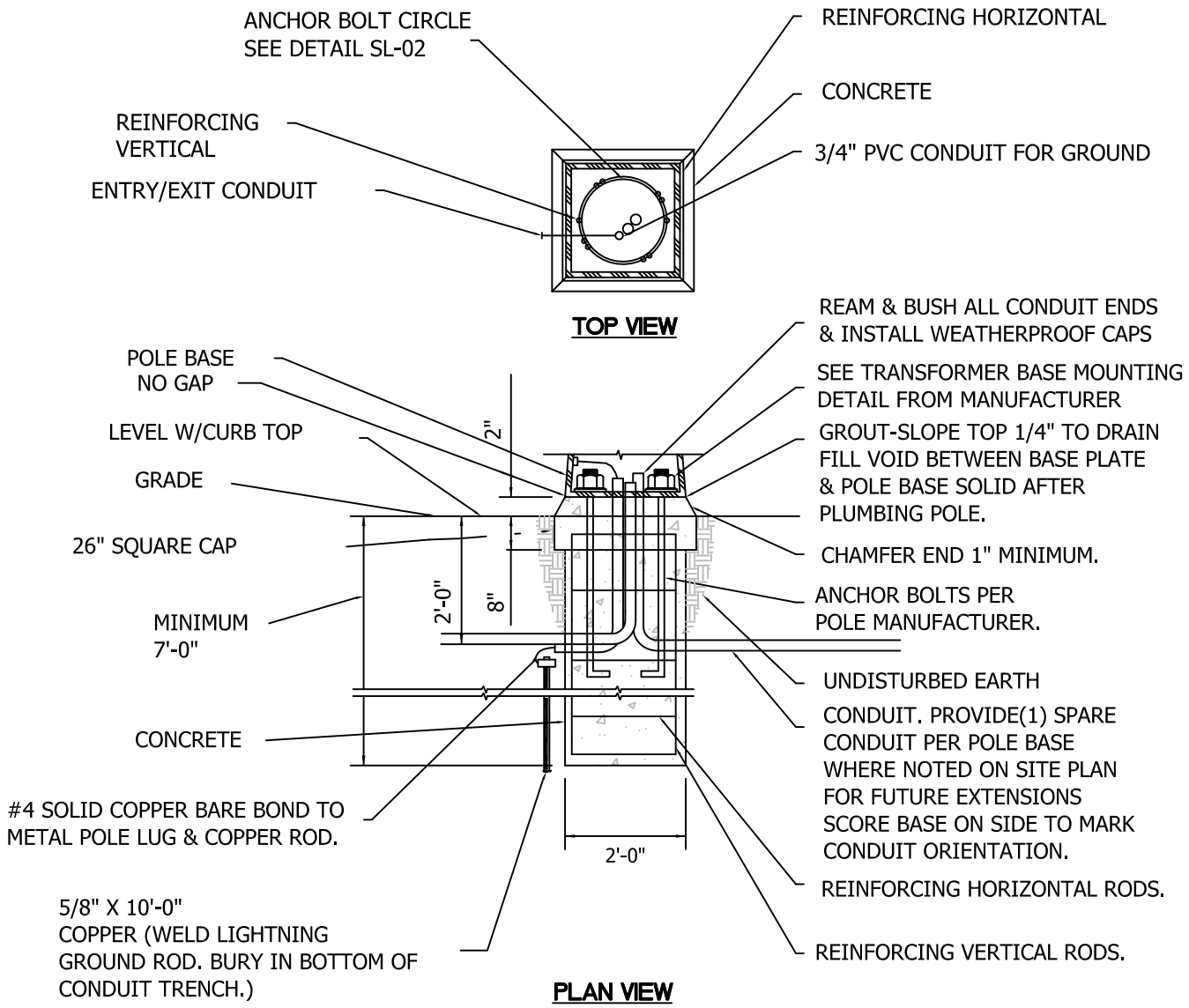

CONCRETE - CLASS C, 4000 PSI, 5-7% AIR ENTRAINED. FILL ALL EXPOSED SURFACE VOIDS. CHAMFER ALL EDGES, SLOPE TOP 1/4" WITH GROUT TO DRAIN WATER (FILL VOID BETWEEN BASE PLATE & POLE BASE SOLID, AFTER PLUMBING POLE), ADJUST SO TRANSFORMER BASE HAS NO GAP TO GROUTED SURFACE. HOT OR COLD WEATHER - FOLLOW ODOT CONSTRUCTION & MATERIAL SPECIFICATIONS SECTION 625.

CONCRETE FINISH - REMOVE ALL FORM MARKS, HAND RUB EXPOSED TOP AND SIDES WITH CARBIDE STONE.

REINFORCING - ASTM A-615 GRADE 60, TYPE S DEFORMED BILLET: #6 VERTICALS, (6 TOTAL), #4 HORIZONTALS 12" O.C., CIRCULAR FORMED. WIRE TIE ALL CONNECTIONS, MAINTAIN 3" MINIMUM CONCRETE COVER.

GROUNDING - PROVIDE 5/8" X 10'-0" COPPER WELD ONE-PIECE GROUND ROD. DRIVE A MINIMUM OF 2'-0" BELOW GRADE. RUN #4 AWG SOLID COPPER GROUNDING ELECTRODE CONDUCTOR IN 3/4" PVC CONDUIT FROM ROD TO ENCLOSURE GROUND BAR. "CAD" WELD WIRE CONNECTION AT ROD.

Date: 5/1/2014

City of Dublin
ENGINEERING

STANDARD DRAWING

POLE FOUNDATION

SHEET 1 OF 2

DRAWING NO. ***SL-04***

LUMINAIRE FUSING - REFER TO TRANSFORMER BASE DETAIL SL-02

GROUNDING LEG - REFER TO TRANSFORMER BASE DETAIL SL-02

ANCHORAGE - PROVIDE A SET OF FOUR-50,000 PSI-MIN YIELD STEEL STRENGTH ANCHOR BOLTS, THREADED, HOT-DIPPED GALVANIZED AT THE THREADED END FOR AT LEAST 10". THE BOLTS SHALL INCLUDE A 4" MINIMUM RIGHT ANGLE HOOK AT THE UNTHREADED END. PROVIDE GALVANIZED NUT, LOCKWASHERS AND FLATWASHERS FOR EACH BOLT.

GROUT - 10,000 PSI, HIGH STRENGTH, NON-SHRINK, NON-METALLIC, COMPLY WITH CRD-C-621, PROVIDE SAND COAT FINISH (PROVIDE SONNOGROUT OR APPROVED EQUAL).

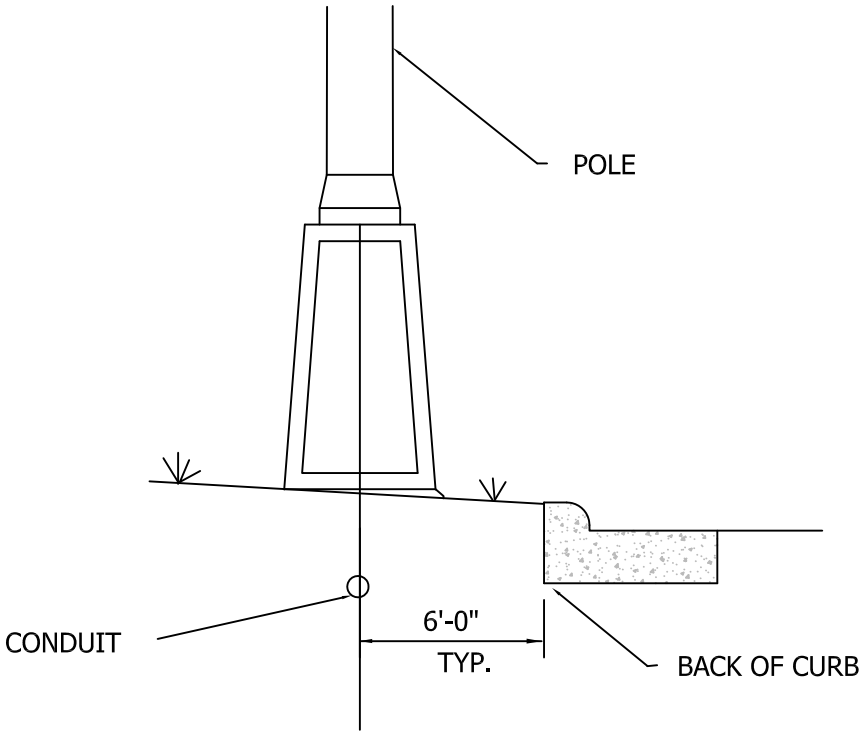

TYPICAL FOUNDATION LOCATION

WEATHERPROOFING - PROVIDE PENETRATING SURFACE APPLIED, 1 COAT CONCRETE WATERPROOFING AGENT. MATERIAL SHALL BE CLEAR PENETRATING, WATER BASED, ALKYALKOXYSILANE AND CONTAIN A MINIMUM OF 40% BY WEIGHT SOLIDS AND BE APPLIED PER MANUFACTURER'S DIRECTIONS. COVERAGE SHALL BE 150 SQ. FEET PER GALLON (PROVIDE HYDROZO ENVIROSEAL 40 OR APPROVED EQUAL). APPLY 1 COAT TO ALL CONCRETE EXPOSED SURFACES ABOVE GRADE.

FIELD CONDITIONS - CONSULT ENGINEER FOR ABNORMAL SOIL CONDITIONS SILTS AND CLAY WITH WATER LIMITS GREATER THAN 50%, HIGH ORGANIC SOILS, SHALLOW BEDROCK, ETC.

CONDUIT - SHALL BE HEAVY WALL 2" OR 3/4" PER GRAPHIC. RIGID NON-METALLIC SCHEDULE 40 PVC FOR USE ABOVE & BELOW GROUND OR CONCRETE ENCASED. RATED FOR 90 DEGREES CELSIUS CONDUCTORS AND USE IN DIRECT SUNLIGHT. MATERIAL SHALL BE UL LISTED AND COMPLY WITH NEMA TC2-1978 AND F.S. #WC-1094A. PROVIDE IN 10 FOOT SECTIONS. SEAL ALL JOINTS WATERTIGHT. GLUE JOINTS WITH PVC CEMENT. BUSH ALL ENDS. ALL BENDS SHALL USE LONG RADIUS PREFORMED ELBOWS. EXTEND CONDUIT TO MINIMUM 2'-0" BELOW GRADE. LOCATION TO BE COORDINATED WITH LANDSCAPING AND UTILITIES.

IF UNIT TYPE DUCT CABLE IS UTILIZED IN TRENCHES IN LIEU OF PVC CONDUIT, AT POLE FOUNDATIONS RETAIN THE PVC CONDUIT SPECIFIED ABOVE IT SHALL FUNCTION AS A SLEEVE FOR THE DUCT CABLE. OVERSIZE PVC CONDUIT EITHER 2 1/2" OR 3" AS REQUIRED BASED ON DUCT CABLE OUTSIDE DIAMETER.

CONDUIT CAPS - TERMINAL POINTS OF ALL CONDUIT AND DUCT CABLE SHALL BE SEALED PROMPTLY AFTER INSTALLATION BY MEANS OF A MOLDED PLASTIC OR RUBBER CAPPING DEVICE THAT ONLY PERMITS WIRE PASS THROUGH.

Date: 5/1/2014

City of Dublin
ENGINEERING

STANDARD DRAWING

POLE FOUNDATION

SHEET 2 OF 2

DRAWING NO. ***SL-04***

* NO SPLICING OF DISTRIBUTION CABLE LESS THAN 500 FEET IN LENGTH.

TRENCHING - CONDUIT TRENCHES SHALL HAVE VERTICAL WALLS AND BE EXCAVATED TO A DEPTH THAT PERMITS CONDUIT TO BE LAID AT 2'-0" BELOW FINISH GRADE WITH A GRAVEL COVER, ABOVE AND BELOW. BACKFILL GRAVEL TO TOPSOIL LIMIT. TRENCHES SHALL BE LOCATED ADJACENT TO AND PARALLEL WITH CURBS OR PAVEMENTS AND SHALL NOT DEVIATE MORE THAN 6" FROM THE LINES DESIGNATED. TRENCHES SHALL NOT EXCEED 12" IN WIDTH. REMOVE EXCESS SOIL AFTER BACKFILLING.

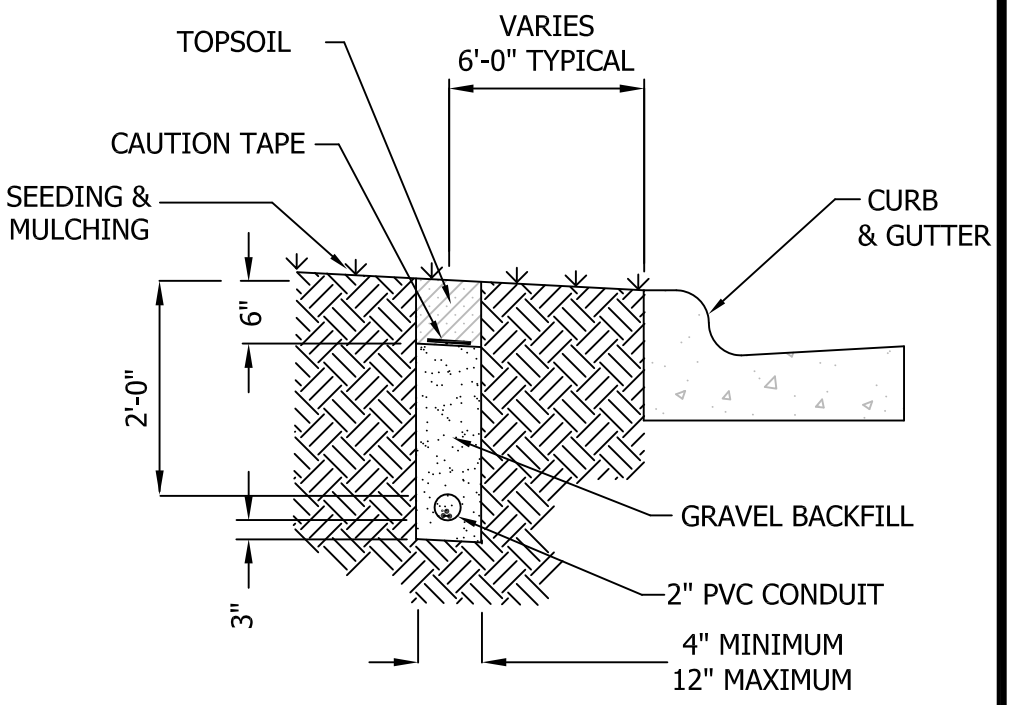

GRAVEL - SHALL BE UNCRUSHED WASHED GRAVEL AND PASS A 1/2" SIEVE. POUR IN PLACE AND COMPACT TO 95% STANDARD PROCTOR IN LAYERS NOT EXCEEDING 6" EACH.

TOPSOIL - FOR BACKFILLING SHALL BE CLEAN, LOOSE FRIABLE, LOAMY TOPSOIL FREE OF SUBSOIL OR REFUSE. TOPSOIL MAY BE FROM THE SITE OR IMPORTED. TOPSOIL SHALL BE PLACED AND SPREAD OVER THE AREAS DESIGNATED TO A DEPTH SUFFICIENTLY GREATER THAN THAT SHOWN SO THAT AFTER NATURAL SETTLEMENT THE COMPLETED WORK WILL CONFORM TO THE ELEVATIONS SHOWN.

SEEDING AND MULCHING - SHALL COMPLY WITH CITY OF COLUMBUS, OHIO CONSTRUCTION AND MATERIAL SPECIFICATIONS SECTION 659.

CONDUIT - SHALL BE HEAVY WALL RIGID NON-METALLIC SCHEDULE 40 PVC FOR USE ABOVE AND BELOW GROUND OR CONCRETE ENCASED. RATED FOR 90 DEGREES CELSIUS CONDUCTORS AND USE IN DIRECT SUNLIGHT. MATERIAL SHALL BE UL LISTED AND COMPLY WITH NEMA TC2-1978 AND F.S. #WC-1094A. PROVIDE IN 10 FOOT SECTIONS. SEAL ALL JOINTS WATERTIGHT. GLUE JOINTS WITH PVC CEMENT. BUSH ALL ENDS. ALL BENDS SHALL USE LONG RADIUS PREFORMED ELBOWS.

CONDUIT CAPS - PROVIDE MOLDED PLASTIC OR RUBBER CAPPING DEVICE THAT ONLY PERMITS WIRE TO PASS THROUGH WHILE PREVENTING DIRT, WATER, ETC. FROM ENTERING.

PULL WIRE - ALL EMPTY CONDUIT INSTALLED FOR FUTURE LIGHTING SHALL CONTAIN A NO. 10 AWG COPPER-CLAD OR ALUMINUM-CLAD PULL WIRE.

WIRING - DISTRIBUTION CABLE SHALL BE #4 AWG XHHW (WET RATED) STRANDED COPPER 600V, 90 DEGREES CELSIUS CONDUCTORS. USE #6 IN APPROPRIATE CONDITIONS. SYSTEM GROUND CABLE SHALL BE #4 AWG FOR POLE TO POLE APPLICATIONS.

METALIZED CAUTION TAPE - 3" (79mm) WIDE RED PLASTIC TAPE WITH BLACK LETTERS READING "CAUTION BURIED ELECTRIC LINE BELOW". BURY ABOVE CONDUIT 6" (158mm) MAX. BELOW GRADE. RUN CONTINUOUS IN ALL TRENCHES NOT COVERED BY PAVEMENT.

Date: 5/1/2014

City of Dublin
ENGINEERING

STANDARD DRAWING

TRENCHES

SHEET 1 OF 3

DRAWING NO. ***SL-05***

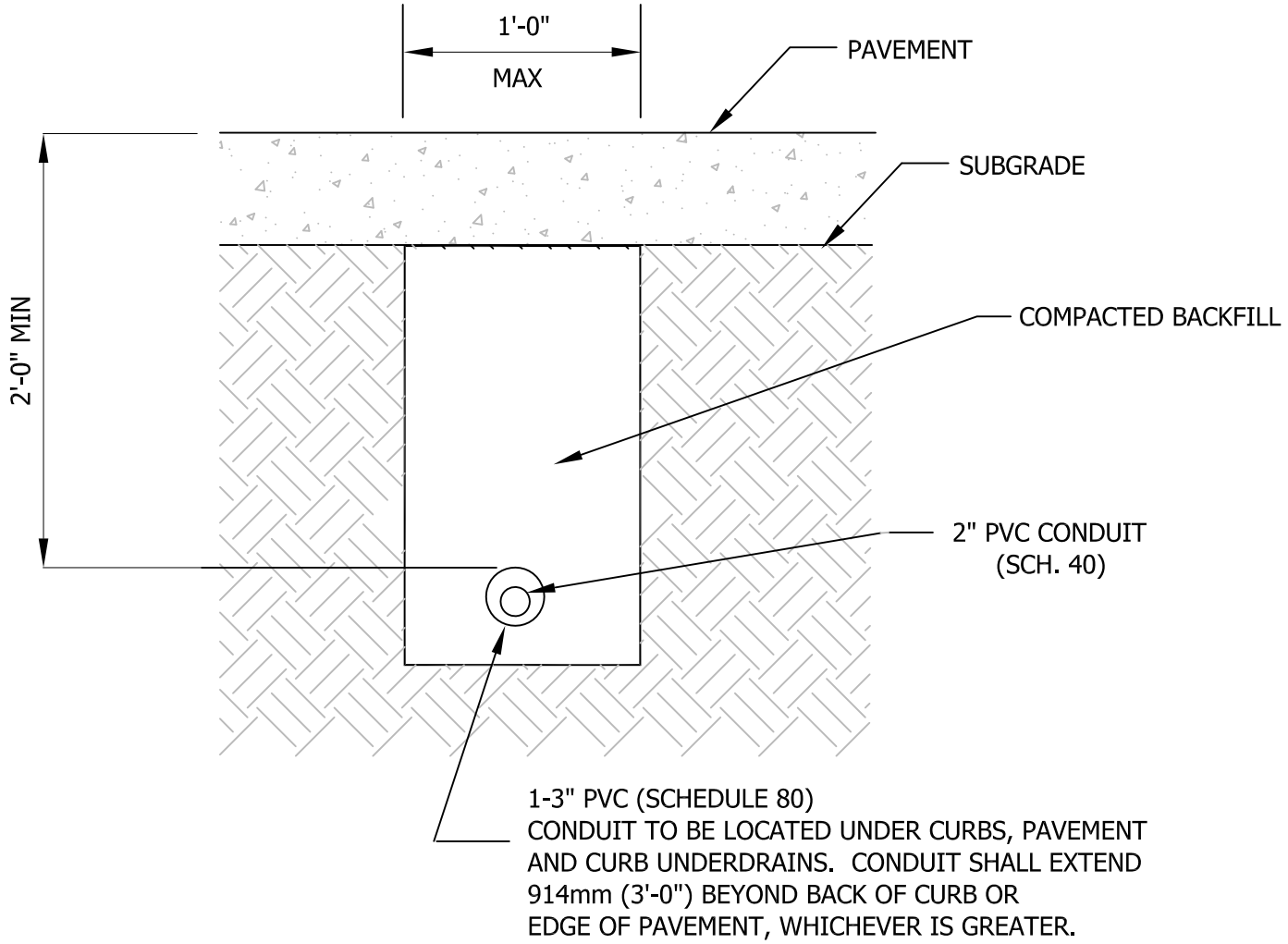

CONDUIT SLEEVE CROSSING PROPOSED PUBLIC ROADWAYS AND COMMERCIAL DRIVEWAYS

GENERAL - CONDUIT SLEEVES SHALL BE PROVIDED WHERE STREET LIGHTING CABLES CROSS ROADWAYS. CONDUIT SLEEVES SHALL ALSO BE PROVIDED UNDER ALL PROPOSED COMMERCIAL DRIVEWAYS.

TRENCHING - TRENCHES SHALL HAVE VERTICAL WALLS AND BE EXCAVATED TO A DEPTH THAT PERMITS CONDUIT SLEEVE TO BE PLACED 2'-0" (610mm) BELOW FINISH GRADE. TRENCH SHALL BE LOCATED PERPENDICULAR TO THE CENTERLINE OF ROADWAYS AND COMMERCIAL DRIVEWAYS UNLESS OTHERWISE SPECIFICALLY NOTED. MAINTAIN INLINE WITH CONDUIT SETBACK DIMENSIONS AT INTERSECTIONS AND CURB CUTS.

BACKFILL - SHALL COMPLY WITH CITY OF COLUMBUS, OHIO CONSTRUCTION AND MATERIAL SPECIFICATIONS ITEM 613, TYPE 2 OR ITEM 912 COMPACTED GRANULAR BACKFILL.

MATERIALS - SHALL COMPLY WITH ODOT CONSTRUCTION AND MATERIAL SPECIFICATIONS SECTION 725.05.

Date: 5/1/2014

City of Dublin
ENGINEERING

STANDARD DRAWING

TRENCHES

SHEET 2 OF 3

DRAWING NO. ***SL-05***

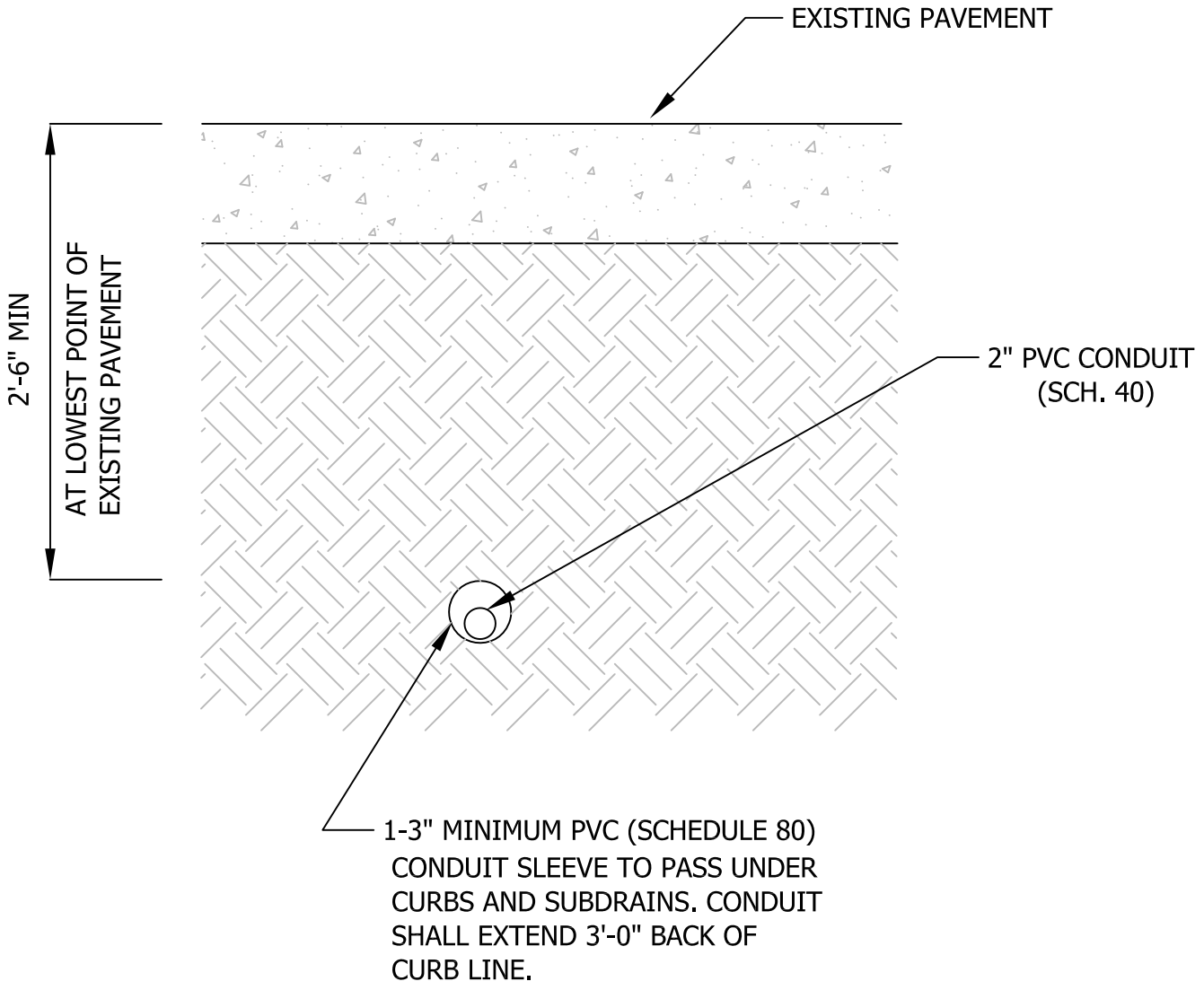

CONDUIT SLEEVES UNDER EXISTING PAVEMENT

CONDUIT SLEEVES PLACED UNDER EXISTING PAVEMENT OR PAVED SHOULDERS SHALL BE INSTALLED BY DRILLING, SUBJECT TO THE APPROVAL OF THE CITY ENGINEER. IF PLACED BY DRILLING, THE BORE SHALL NOT EXCEED THE CONDUIT DIAMETER BY MORE THAN (5) PERCENT. CONDUIT SHALL BE PLACED WITH A MINIMUM AMOUNT OF DISTURBANCE TO THE ROADWAY. CONDUIT SLEEVES SHALL BE GALVANIZED STEEL CONDUIT SIZED AS SHOWN WITH FITTINGS FURNISHED MEETING THE REQUIREMENTS OF ANSI C 80.1, C80.4, AND UL 6 FOR TYPE 1 RIGID STEEL CONDUIT. EACH LENGTH SHALL BEAR THE UL LABEL. CONTRACTOR WILL OBTAIN A "PERMIT TO WORK IN EXISTING STREET PUBLIC WAY" FROM THE DIVISION OF ENGINEERING, CITY OF DUBLIN.

Date: 5/1/2014

City of Dublin
ENGINEERING

STANDARD DRAWING

TRENCHES

SHEET 3 OF 3

DRAWING NO. ***SL-05***

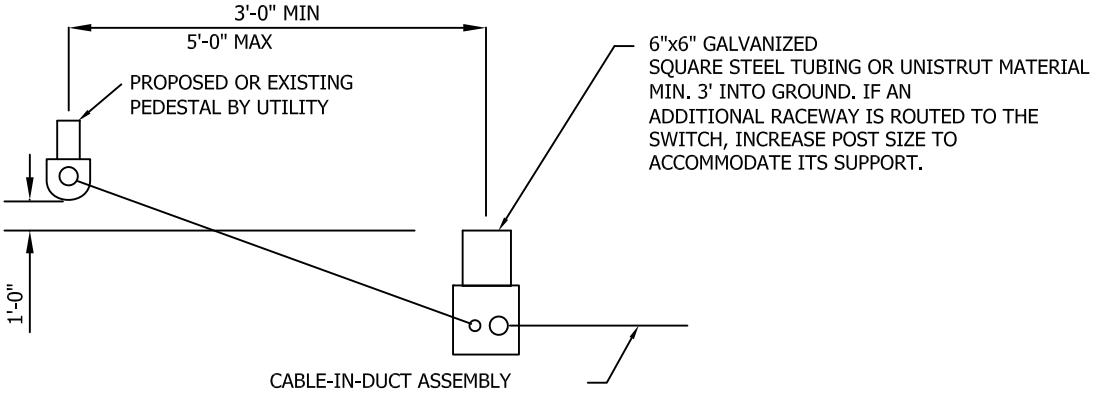

PLAN

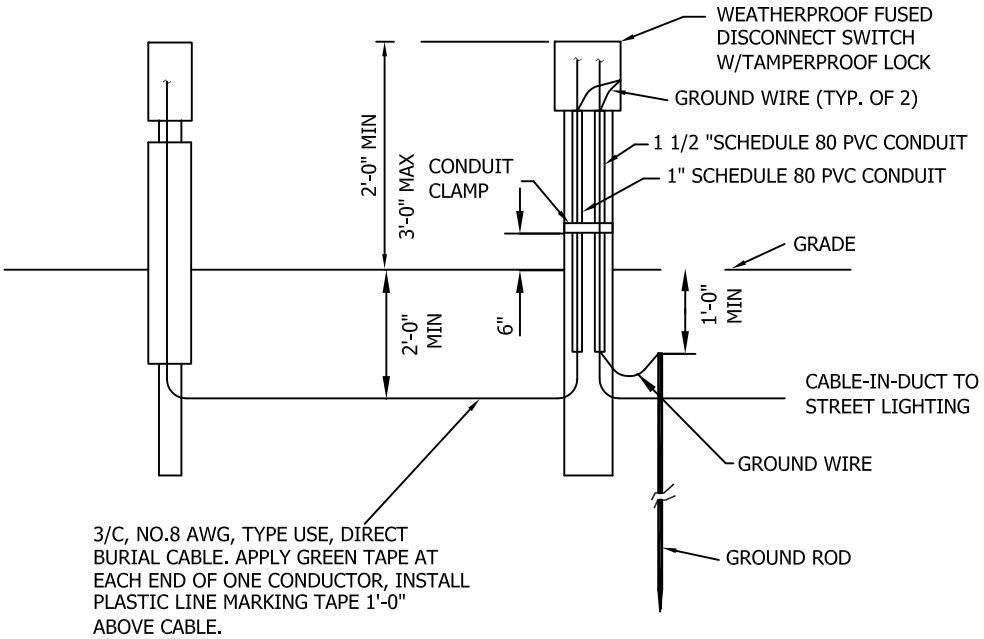

ELEVATION

THE CIRCUIT DISCONNECT SHALL BE A GENERAL DUTY, FUSIBLE TYPE SWITCH IN A NEMA NO. 4/4X ENCLOSURE.

A. MANUFACTURER: THE SWITCH SHALL BE GENERAL ELECTRIC NO. TH3221SS.

B. SWITCH RATING: THE SWITCH SHALL BE RATED AT 30 AMPS, 240 VOLTS, 3 POLE.

C. FUSES: FUSES SHALL BE UL CLASS RK-1, REJECTION TYPE.

D. LOCKS: EACH SWITCH SHALL BE LOCKABLE AND SHALL BE PROVIDED WITH A FARGO NO. GM-303 TAMPERPROOF LOCK WITH SHEAR OFF LOCKING SCREW.

NOTES:

1. ATTACH NO.6 CONDUCTORS TO LOAD TERMINALS VIA SHORT LENGTHS OF N0.8 CONDUCTORS & APPROPRIATE COMPRESSION CABLE JOINT.

2. NO MORE THAN 2 N0.6 CONDUCTORS SHALL BE CONNECTED TO EACH N0.8 CONDUCTOR.

Date: 5/1/2014

City of Dublin
ENGINEERING

STANDARD DRAWING

QUICK DISCONNECT

SHEET 1 OF 1

DRAWING NO. ***SL-06***

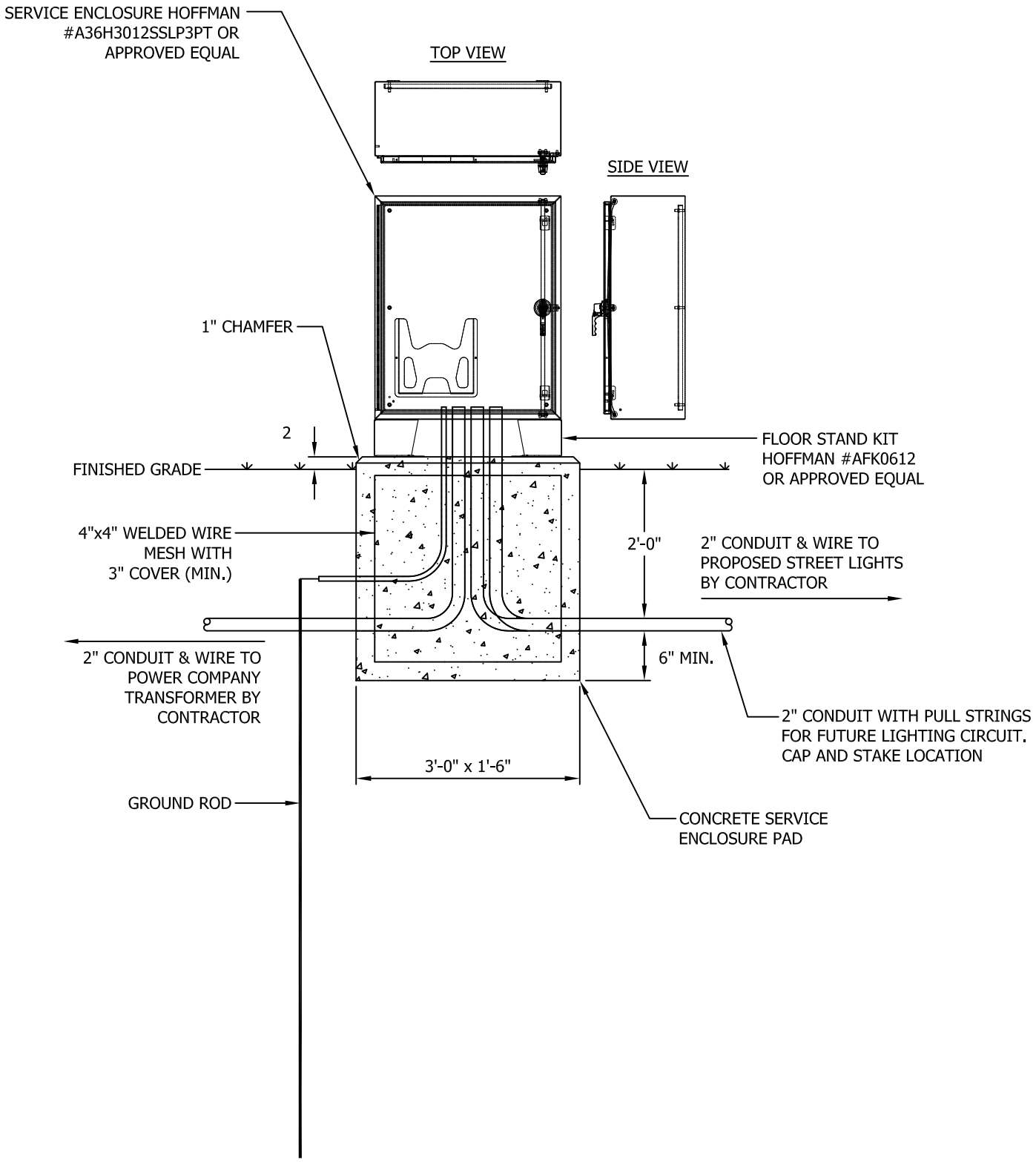

Date: 5/1/2014

City of Dublin
ENGINEERING

STANDARD DRAWING

LIGHTING CONTROLLER

SHEET 1 OF 4

DRAWING NO. ***SL-13***

COORDINATION - COORDINATE LOCATION OF TRANSFORMER AND PAD GRADING WITH AEP AND THE CITY ENGINEER.

SERVICE TRANSFORMER - PROVIDED, INSTALLED AND WIRED BY AEP.

TRANSFORMER PAD GRADING - INSTALL PER AEP REQUIREMENTS FOR SIZE AND LOCATION. REFER TO SERVICE ENCLOSURE PAD FOR MATERIAL SPECIFICATIONS.

SERVICE ENCLOSURE PAD - STRUCTURE SHALL BE SET CLOSE TO THE AEP POWER COMPANY TRANSFORMER PAD. LOCATION OF THE TRANSFORMER PAD IN RELATIONSHIP TO THE ENCLOSURE PAD SHALL BE COORDINATED WITH THE CITY ENGINEER. CONCRETE SHALL BE CLASS C. FILL ALL EXPOSED SURFACE VOIDS. CHAMFER ALL EDGES 3/4-INCH OR 1-INCH. SLOPE TOP 1/4" TO DRAIN WATER. FINISH - REMOVE ALL FORM MARKS, PROVIDE FLOATED AND STEEL TROWELED FINISH.

SERVICE ENCLOSURE - PROVIDE A NEMA WATERTIGHT STAINLESS STEEL ENCLOSURE. SIZE - 36"H X 30"W X 12"D; HAVING A SINGLE CONTINUOUS HINGED LOCKING DOOR, INTERIOR MOUNTING PANEL WITH A 6" MINIMUM STAINLESS STEEL MATCHING FLOOR STAND. CONCRETE AND OR BOLT TYPE ANCHOR AND LEVEL TO PAD VIA STAINLESS STEEL MACHINE BOLT, NUTS & LOCK WASHERS. DRILL BOTTOM OF ENCLOSURE WITH 6MM (1/4") WEEP HOLE AT LOW POINT. CONCRETE PAD SHALL NOT EXTEND ABOVE PROPOSED GRADE MORE THAN 2-INCHES.

SERVICE ENCLOSURE FINISH - A DARK BRONZE APPROVED BY THE CITY ENGINEER. THE PAINT SHALL BE A POWDER PAINT FINISHED TO A GLOSS OF 35% (AT 60 DEGREES).

SERVICE ENCLOSURE LOCK - THREE POINT MECHANISM WITH LOCKABLE HANDLE. PADLOCK PROVIDED BY THE CITY.

PHOTOCELL CONTROLLER - PROVIDE AN ON-OFF PHOTO INITIATED CONTROLLER WITH SEALED CADMIUM SULFIDE PHOTOCELL TO OPERATE IN -30 DEGREES F TO +140 DEGREES F TEMPERATURES, THERMAL INERTIA OF 15 SECONDS MINIMUM, THREADED PIPE NIPPLE, RATED 16 AMPS 2000 WATTS AT 120V, AND SINGLE POLE SINGLE THROW SWITCH. LIGHT SHALL BE 2 FOOT CANDLES FOR TURN ON AND 10 FOOT CANDLES FOR TURN OFF. PROVIDE IN WEATHERPROOF ENCLOSURE. LOAD SHALL REMAIN "ON" IN CASE OF CELL FAILURE. MOUNT ATOP FIRST POLE FROM SERVICE ENCLOSURE.

APPROVED MANUFACTURER - PARAGON #PJ201-00

GROUNDING - PROVIDE 5/8" X 10' COPPER WELD ONE PIECE GROUND ROD. DRIVE A MINIMUM OF 2'-0" BELOW GRADE. PROVIDE #8 AWG SOLID COPPER GROUNDING ELECTRODE CONDUCTOR IN 3/4" PVC CONDUIT FROM ROD TO ENCLOSURE GROUND BAR. CADWELD WIRE CONNECTION TO ROD.

FUSING - SERVICE ENTRANCE - PROVIDE DUAL ELEMENT, TIME DELAY FUSES, UL CLASS RK-1, 600 V, REJECTION TYPE.

APPROVED MANUFACTURER - BUSS #LP-RK

Date: 5/1/2014

City of Dublin
ENGINEERING

STANDARD DRAWING

LIGHTING CONTROLLER

DRAWING NO. ***SL-13***

CONTROL CIRCUIT - PROVIDE SINGLE ELEMENT, FAST ACTING TYPE FUSE, UL CLASS CC, 120 V, REJECTION TYPE.

APPROVED MANUFACTURER - BUSS #KTK-R

CONDUIT - SHALL BE HEAVY WALL 2" OR 3/4" PER GRAPHIC. RIGID NON METALLIC SCHEDULE 40 PVC FOR USE ABOVE AND BELOW GROUND OR CONCRETE ENCASE. RATED FOR 90 DEGREES CELSIUS CONDUCTORS AND USE IN DIRECT SUNLIGHT. MATERIAL SHALL BE UL LISTED AND COMPLY WITH NEMA TC2-1978 AND F.S. #WC-1094A. PROVIDE IN 10' SECTIONS. SEAL ALL JOINTS WATERTIGHT. GLUE JOINTS WITH PVC CEMENT AND BUSH ALL ENDS. ALL BENDS SHALL USE LONG RADIUS PRE FORMED ELBOWS. EXTEND CONDUIT TO MINIMUM 2'-0" BELOW GRADE. LOCATION TO BE COORDINATED WITH LANDSCAPING AND UTILITIES.

IF UNIT TYPE DUCT CABLE IS UTILIZED IN TRENCHES IN LIEU OF PVC CONDUIT, AT POLE FOUNDATIONS RETAIN THE PVC CONDUIT SPECIFIED ABOVE IT SHALL FUNCTION AS A SLEEVE FOR THE DUCT CABLE. OVERSIZE PVC CONDUIT EITHER 2 1/2" OR 3" AS REQUIRED BASED ON DUCT CABLE OUTSIDE DIAMETER.

WIRING - REFER TO GENERAL SPECIFICATIONS.

LIGHTING CONTROLLER - A CLASS R FUSIBLE COMBINATION LIGHTING CONTACTOR TYPE CONTROLLER ASSEMBLY RATED 600V, 60A-2P, 60HZ WITH SOLID NEUTRAL, ELECTRICALLY HELD WITH CONTROL FUSE, 120V CONTROL VOLTAGE 3 POSITION HAND - OFF - AUTO SELECTOR SWITCH AND PHOTOCELL CONTROL. MOUNT ALL DEVICES IN A SERVICE ENCLOSURE LESS PHOTO CONTROL.

APPROVED MANUFACTURER - SQUARE "D" NIGHT-MASTER SPC-61 (OR APPROVED EQUAL).

480V SYSTEM
CLASS 8903 NIGHTMASTER LIGHTING CONTACTOR 8903SPC61V81CFF4G102TY1
CONTACTOR RATING - 60 AMPS
FUSED COMBINATION STARTER WITH CLASS R FUSE CLIPS (FUSES NOT INCLUDED)
3 POLE DEVICE
TYPE 3R ENCLOSURE SUITABLE ONLY FOR USE AS SERVICE EQUIPMENT.
SPECIFIED FOR 480 VOLTS, 60 HZ POWER SYSTEM
FUSED CONTROL TRANSFORMER SELECTED WITH 120V, 60 HZ COIL
- T - STANDARD CAPACITY
- 480 VOLT PRIMARY
- 120 VOLT SECONDARY

FUSING
- F4 - 2 PRIMARY CONTROL FUSES
- F - 1 SECONDARY CONTROL FUSE

CONTROL UNITS SUPPLIED
- C - HAND-OFF-AUTO SELECTOR SWITCH
- G102 - WIRED FOR REMOTE PHOTOCELL
- N - ADDITION OF SOLID NEUTRAL
- Y1 - UL PANEL LABEL

277V SYSTEM
CLASS 8903 NIGHTMASTER LIGHTING CONTACTOR 8903SPC61V85CFF4G102TY1
CONTACTOR RATING - 60 AMPS
FUSED COMBINATION STARTER WITH CLASS R FUSE CLIPS (FUSES NOT INCLUDED)
3 POLE DEVICE
TYPE 3R ENCLOSURE SUITABLE ONLY FOR USE AS SERVICE EQUIPMENT.
SPECIFIED FOR 277 VOLTS, 60 HZ POWER SYSTEM
FUSED CONTROL TRANSFORMER SELECTED WITH 120V, 60 HZ COIL
- T - STANDARD CAPACITY
- 277 VOLT PRIMARY
- 120 VOLT SECONDARY

FUSING
- F4 - 2 PRIMARY CONTROL FUSES
- F - 1 SECONDARY CONTROL FUSE

CONTROL UNITS SUPPLIED
- C - HAND-OFF-AUTO SELECTOR SWITCH
- G102 - WIRED FOR REMOTE PHOTOCELL
- N - ADDITION OF SOLID NEUTRAL
- Y1 - UL PANEL LABEL

240V SYSTEM
CLASS 8903 NIGHTMASTER LIGHTING CONTACTOR 8903SPC62V80CFF4G102TY1
CONTACTOR RATING - 60 AMPS
FUSED COMBINATION STARTER WITH CLASS R FUSE CLIPS (FUSES NOT INCLUDED)
3 POLE DEVICE
TYPE 3R ENCLOSURE SUITABLE ONLY FOR USE AS SERVICE EQUIPMENT.
SPECIFIED FOR 240 VOLTS, 60 HZ POWER SYSTEM
FUSED CONTROL TRANSFORMER SELECTED WITH 120V, 60 HZ COIL
- T - STANDARD CAPACITY
- 240 VOLT PRIMARY
- 120 VOLT SECONDARY

FUSING
- F4 - 2 PRIMARY CONTROL FUSES
- F - 1 SECONDARY CONTROL FUSE

CONTROL UNITS SUPPLIED
- C - HAND-OFF-AUTO SELECTOR SWITCH
- G102 - WIRED FOR REMOTE PHOTOCELL
- N - ADDITION OF SOLID NEUTRAL
- Y1 - UL PANEL LABEL

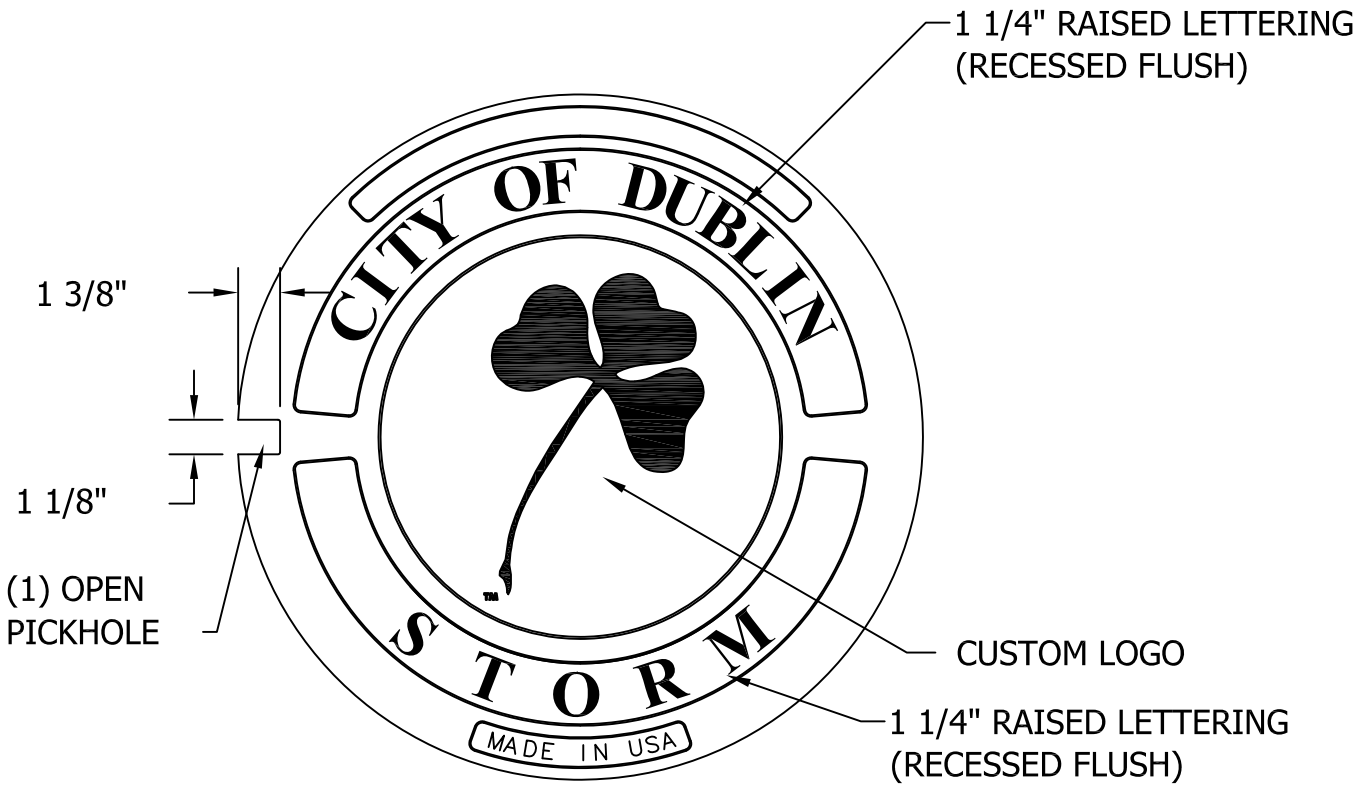

COVER FACE

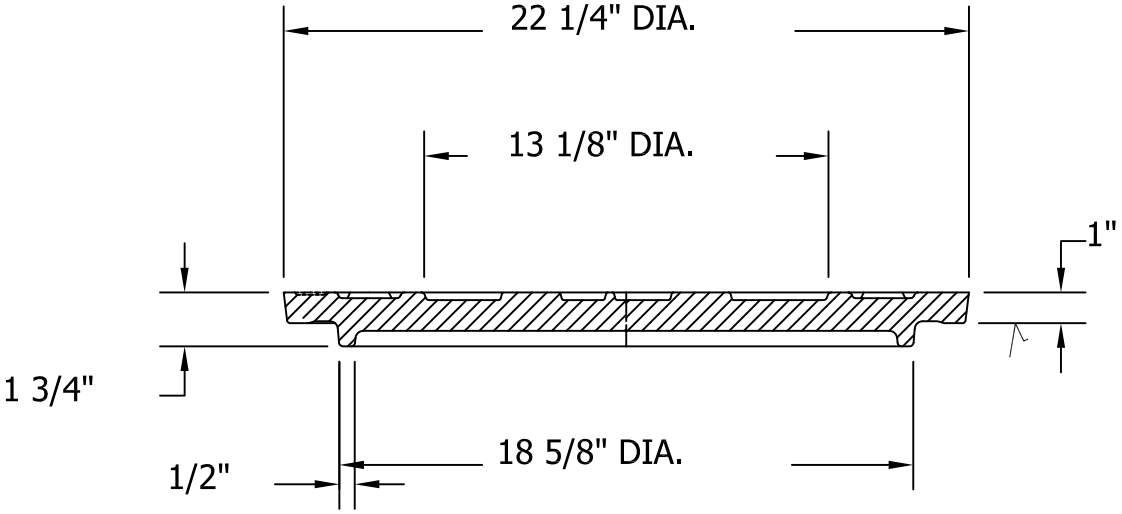

COVER SECTION

Date: 05/01/2014

City of Dublin
ENGINEERING

STANDARD DRAWING

STORM SEWER MANHOLE LID

SHEET 1 OF 1

DRAWING NO. ***ST-03***

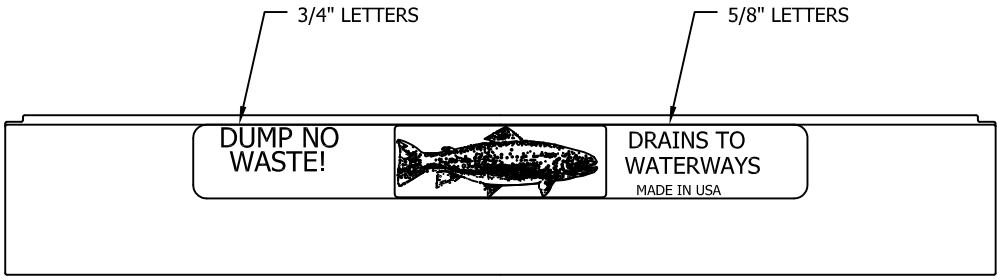

TOP VIEW

CURB ADJUSTMENT
6" TO 10"

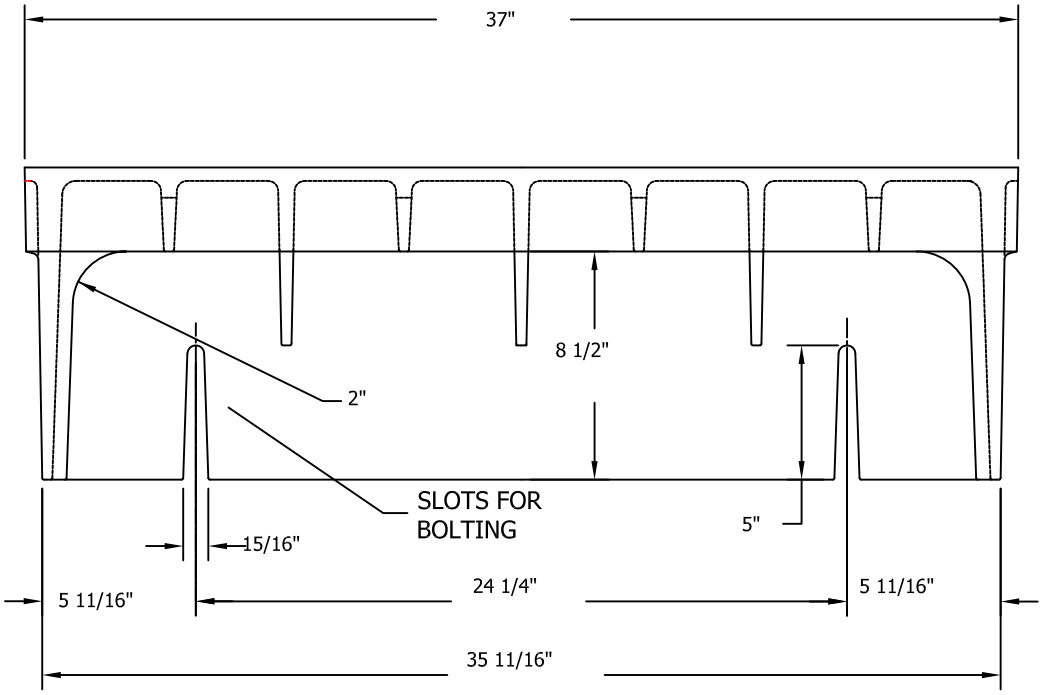

FRONT VIEW

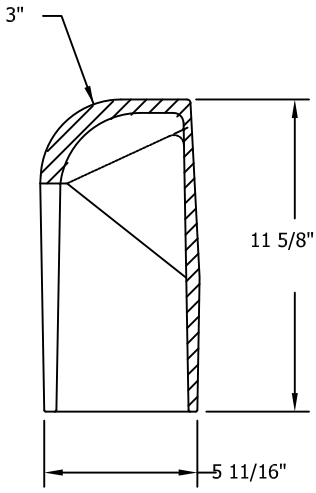

SECTION

Date: 05/01/2014

City of Dublin
ENGINEERING

STANDARD DRAWING

DRAINS TO RIVER CURB INLET

SHEET 1 OF 1

DRAWING NO. ***ST-04***

PLAN VIEW

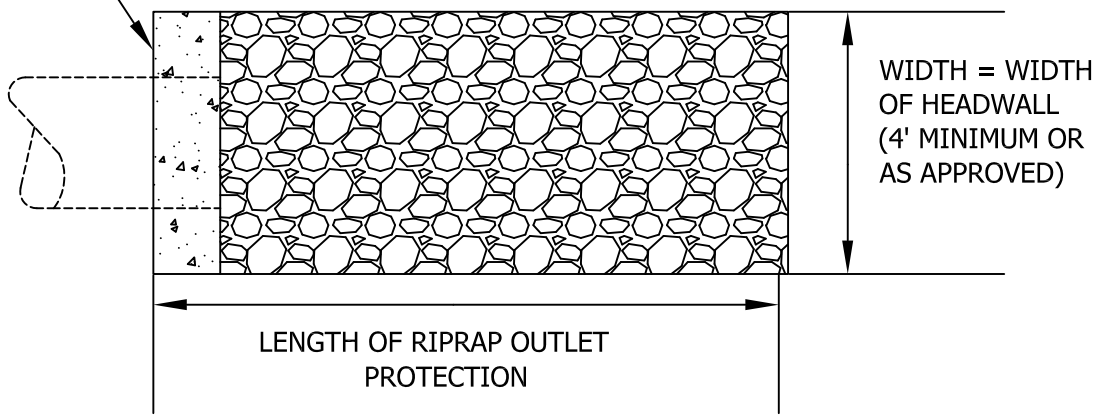

PROFILE

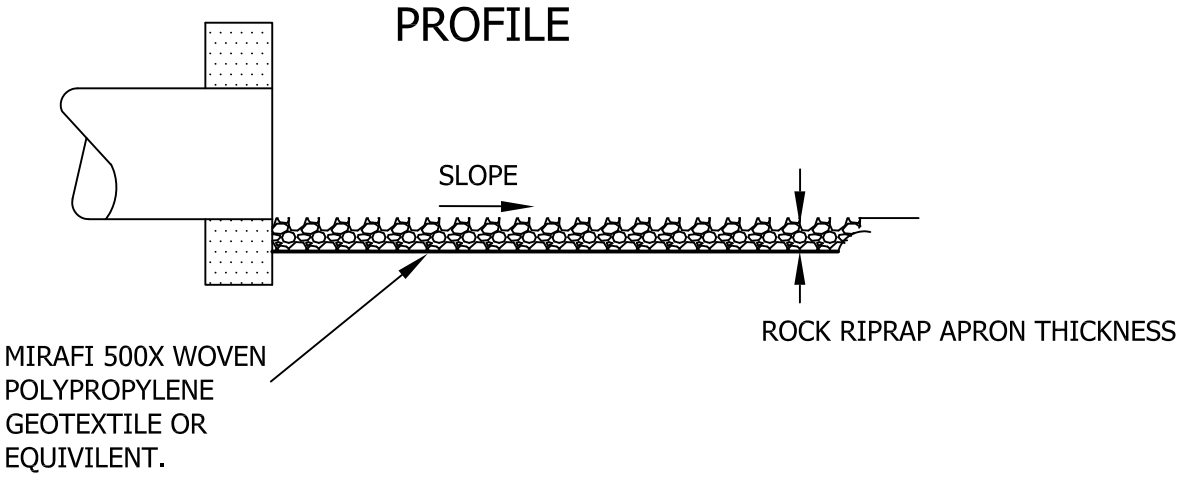

NOTES:
1. MINIMUM LENGTH TO BE 8 FEET, 5 FEET IF PIPE IS SUBMERGED.
2. MINIMUM THICKNESS OF 18 INCHES.
3. RIP-RAP SIZE TO BE DETERMINED BY OUTLET FLOW VELOCITY

Date: 05/01/2014

City of Dublin
ENGINEERING

STANDARD DRAWING

ROCK CHANNEL PROTECTION DETAIL

SHEET 1 OF 1

DRAWING NO. ***ST-05***

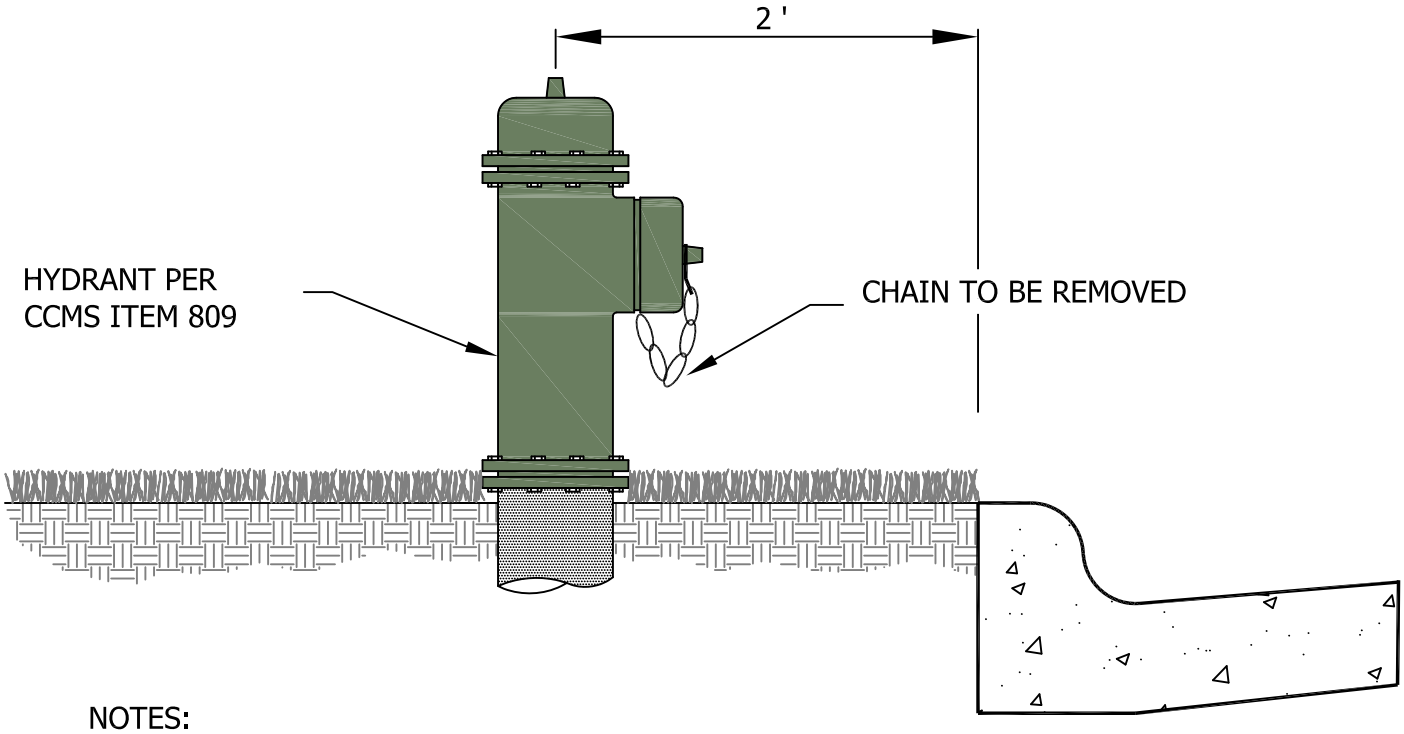

NOTES:

PAINT AND PRIMER TO BE SHOP APPLIED.

PAINT: SHERWIN WILLIAMS - POLANE SP POLYURETHANE ENAMEL, OR APPROVED EQUAL

PAINT COLOR: VISTA GREEN NO. 80-105 (RGB#: 106,127,96), OR APPROVED EQUAL

PRIMER: AS SPECIFIED BY THE MANUFACTURER

PRIVATE HYDRANTS SHALL BE WHITE NO. D876967-31-1 OR 80-1 WITH VISTA GREEN TOP AND CAP

ALL HYDRANTS WILL COME EQUIPPED WITH A STORZ NOZZLE.

MANUFACTURER	PRODUCT NO.	COMMENTS
AMERICAN FLOW CONTROL	MARK 73 SERIES	"NO DRAIN" ONLY
CLOW CORPORATION	EDDY "F2641"	
MUELLER CO.	SUPER CENTURION 200	
KENNEDY	K-81A	
AMERICAN AVK	NO. 2760	

Date: 05/01/2014

City of Dublin
ENGINEERING

STANDARD DRAWING

FIRE HYDRANT

SHEET 1 OF 1

DRAWING NO. ***WA-01***

G. SCOPE OF WORK

Construction of a single lane modern roundabout and approximately 1,900 feet of 3-lane boulevard roadway; concrete walk and curb-and-gutter; 8-ft wide asphalt shared-use path; water main; storm sewer; street lighting; earthwork; clearing and grubbing, soil stabilization; and restoration.

IV. OWNER COMPLETED FORMS

A. OWNER EXECUTION CHECKLIST

The following list highlights and serves as a reminder of actions required to execute the Contract with the selected bidder.

Notice of Award

- ☐ Complete the form once bidder selected
- ☐ Mail form to bidder
- ☐ Collect acceptance from bidder

Notice of Award to Surety and Surety's Agent

- ☐ Complete the form once bidder selected
- ☐ Send the bond to legal counsel for double-check of validity
- ☐ Send notice form to Surety and Agent at the addresses listed on the Bond form

Bid Tabulation Sheet

- ☐ If Prevailing Wage applies, ensure that the Bid Tabulation Sheet is completed and in your Project file

Prevailing Wage

- ☐ Check the date of the Determination Letter included with the Contract Documents. If it has expired, issue new prevailing wage rates to the Contractor.

Owner/Contractor Agreement

- ☐ Have the Contractor sign the Agreement
- ☐ Have the Law Director review and sign the Agreement
- ☐ Have the Fiscal officer sign the Agreement
- ☐ Have the CITY OF DUBLIN representative sign the Agreement

Notice of Commencement

- ☐ Complete the Notice of Commencement form and put it in the Project file
- ☐ Must produce it if requested but no filing requirement

Notice to Proceed

- ☐ Issue the Notice to Proceed

Bidder's and Subcontractors' Certificate(s) of Licensure

- ☐ If applicable, Collect from Bidder if not submitted with Bid

B. NOTICE OF AWARD TO BIDDER

Date: _____

PROJECT: CHURCHMAN ROAD - PHASE 2

The CITY OF DUBLIN (Owner) has considered the Bid submitted by you for the above-described work in response to the Legal Notice dated March 24, 2016.

You are hereby notified that your Bid has been accepted for items in the amount of $.

You are required by the Instructions to Bidders to execute the Contract and furnish the required documents within ten (10) calendar days from the date of this notice to you.

If you fail to execute said Contract within ten (10) days from the date of this notice, Owner may—at its discretion—exercise its rights with respect to your Bid guaranty and be entitled to such other rights as may be granted by Law.

You are required to return an acknowledged copy of this Notice of Award to the Owner.

Dated this _____ day of _____, 2016.

Sincerely,

_____
Paul A. Hammersmith P.E.
Director of Engineering / City Engineer

ACCEPTANCE OF NOTICE

Receipt of the above Notice of Award is hereby acknowledged.

Bidder_____

This _____ day of _____, 2016

By: _____

Title: _____

C. NOTICE OF AWARD TO SURETY AND SURETY'S AGENT

_____ (Surety)

_____ (Address)

_____ (City/State/Zip)

_____ (Surety's Agent)

_____ (Address)

_____ (City/State/Zip)

Date: _____

SENT BY REGULAR U.S. MAIL

RE: NOTICE OF AWARD OF CONTRACT

To Whom It May Concern:

You are notified that your principal, , has been awarded a contract for the CITY OF DUBLIN, CHURCHMAN ROAD - PHASE 2 project, in the amount of $_____ by the CITY OF DUBLIN, OHIO .

Sincerely,

_____
Paul A. Hammersmith P.E.
Director of Engineering / City Engineer

D. NOTICE TO PROCEED

To:

Date: _____

Project: CHURCHMAN ROAD - PHASE 2

Owner: CITY OF DUBLIN, OHIO
5200 Emerald Parkway, Dublin, Ohio 43017

You are hereby notified to commence Work in accordance with the City/Contractor Agreement dated , and you are to complete the Work in the time required by the Contract Documents. Within ten (10) days from this Notice to Proceed date, you will begin physical, on-site improvements. You are required to return an acknowledged copy of this Notice to Proceed, to the Owner, indicating Acceptance of this Notice to Proceed.

_____
Paul A. Hammersmith P.E.
Director of Engineering / City Engineer

ACCEPTANCE OF NOTICE TO PROCEED

Receipt of the above NOTICE TO PROCEED is hereby acknowledged by _____, this the day of _____, 2016.

By: _____

Title: _____

E. NOTICE OF COMMENCEMENT OF PUBLIC IMPROVEMENT (O.R.C. §1311.252)

NOTICE IS HEREBY GIVEN OF THE COMMENCEMENT OF A PUBLIC IMPROVEMENT AS FOLLOWS:

1. The public improvement is identified as the CITY OF DUBLIN, CHURCHMAN ROAD - PHASE 2 project located at Intersection of Rings Road and Churchman Road.

2. The public authority and Owner responsible for the public improvement is the CITY OF DUBLIN, OHIO, 5200 Emerald Parkway, Dublin, Ohio 43017 .

3. The principal contractor(s) for the public improvement are as follows:

, .

4. The date the CITY OF DUBLIN first executed a contract with a principal contractor for this public improvement is .

5. The name and address of the representative for the CITY OF DUBLIN upon whom service may be made for the purposes of serving an affidavit pursuant to Section 1311.26 of the Ohio Revised Code is Paul A. Hammersmith P.E., Director of Engineering / City Engineer for the CITY OF DUBLIN, OHIO, 5800 Shier-Rings Road, Dublin, Ohio 43016.

_____ _____

Paul A. Hammersmith P.E. Date
Director of Engineering / City Engineer

The foregoing instrument was acknowledged before me this _____, day of _____, 20____ by Paul A. Hammersmith P.E., Director of Engineering / City Engineer for the CITY OF DUBLIN, OHIO.

Signature and Seal of person taking acknowledgement:

_____

F. PREVAILING WAGE BID TABULATION SHEET

Please print and complete this form. Keep it with your records until the contract has been awarded. Once the contract has been officially awarded, check mark which company was awarded the contract for the project and send or fax a copy to the Wage and Hour Division at 614-728-8639.

Contracting Public Authority: the CITY OF DUBLIN, OHIO		
Project Name: CHURCHMAN ROAD - PHASE 2		
Project No.: 14-031.0-CIP	Bid Date: April 7, 2016	Estimate: $ 2,200,000.00

Contract Description: ☐General ☐HVAC ☐Electrical ☐Plumbing ☐Asbestos ☐Other_____

Awarded to (check)	List of Bidding Contractors	Total Bid Amount

Submitted By

Submit Questions to: Telephone Number: 614-410-4621 Mike Sweder, P.E.	Submit Questions to: Fax: 614-410-4699 Mike Sweder, P.E.
Print Name: Paul A. Hammersmith P.E.	Title: Director of Engineering / City Engineer
Signature:_____ Paul A. Hammersmith, P.E.	Date:

V. ADDITIONAL PROJECT FORMS

A. PAYROLL INFORMATION

PROJECT: **CHURCHMAN ROAD - PHASE 2**

I, _____ (Name),

_____ (Title) of _____ (Company Name), state the following:

1. That I pay or supervise the payment of the persons employed by _____ (Company Name) on the above-referenced project.

2. That during the payroll period commencing on the _____ day of _____, 2016, and ending on the _____ day of _____, 2016, all persons employed on said project have been paid the full weekly wages earned; that no rebates have been or will be made either directly or indirectly to or on behalf of said _____ (Contractor/Subcontractor) from the full weekly wages earned by such persons; and that no deductions have been made either directly or indirectly from the full wages earned by such persons, other than permissible deductions as defined in Regulations, Part 3 (29 CFR Subtitle A), issued by the Secretary of Labor under the Copeland Act, as amended (48 Stat. 948, 63 Stat. 108, 72 Stat. 967; 76 Stat. 357; 40 U.S.C. 276c), and described below:

_____

_____

_____

3. That any payrolls otherwise under this Agreement for Construction (the "Agreement") required to be submitted for the above period are correct and complete; that the wage rates for laborers or mechanics contained therein are not less than the applicable wage rates contained in the specifications as supplied by the Department of Industrial Relations or any wage determination incorporated into the Agreement; and that the classifications set forth therein for each laborer or mechanic conform with the work he performed.

4. That any apprentices employed in the above period are duly registered in a bona fide apprenticeship program registered with the Ohio Apprenticeship Council.

5. That (check applicable box):

□ a. WHERE FRINGE BENEFITS ARE PAID TO APPROVED PLANS, FUNDS, OR PROGRAMS:

In addition to the basic hourly wage rates paid to each laborer or mechanic listed in the above-referenced payroll, payments of fringe benefits listed in the Agreement have been or will be made to appropriate programs for the benefit of such employees, except as noted in Section 4 below.

□ b. WHERE FRINGE BENEFITS ARE PAID IN CASH:

Each laborer or mechanic listed in the above-referenced payroll has been paid as indicated on the payroll, and amount not less than the sum of the applicable basic hourly wage rate plus the amount of the required fringe benefits as listed in the Agreement, except as noted in Section 4 below.

c. Exceptions:

Exception (Craft):	Explanation:
_____	_____
_____	_____
_____	_____
_____	_____

Remarks:

_____

_____

_____

(Signature)

_____

(Print Name and Title)

The willful falsification of any of the above statements may subject the Contractor or Subcontractor to fines as described in Section 4115.99 of the O.R.C.

B. FINAL AFFIDAVIT OF COMPLIANCE WITH PREVAILING WAGES

PROJECT: **CHURCHMAN ROAD - PHASE 2**

STATE OF _____

COUNTY OF _____, SS:

I,_____,(Name of person signing the affidavit) _____ (Title) do hereby certify that the wages paid to all employees of _____ (Company Name) for all hours worked on project the CITY OF DUBLIN CHURCHMAN ROAD - PHASE 2 Project located at Intersection of Rings Road and Churchman Road during the period from _____to_____ are in compliance with the Prevailing Wage requirements of Chapter 4115 of the Ohio Revised Code. I further certify that no rebates or deductions have been or will be made, directly or indirectly, from any wages paid in connection with this project, other than those provided by law.

_____

(Signature of Affiant)

_____

(Print Name)

Sworn to and subscribed in my presence this _____ day of _____, 2016.

_____

Notary Public

The above affidavit must be executed and sworn to by the officer or agent or the Contractor/Subcontractor who supervised the payment of employees, before the CITY OF DUBLIN, OHIO will release the surety and/or make final payment due under the terms of the Agreement.

C. CONTRACTOR'S LIEN WAIVER AND RELEASE AGREEMENT

Project: **CHURCHMAN ROAD - PHASE 2**

The undersigned hereby acknowledges receipt of payment from the City for all Work on the Project through the date of its prior Application for Payment. The undersigned acknowledges and agrees that the terms in this Agreement shall have the same meaning as in the Contract Documents for the Project.

In return for said payment, and/or pursuant to certain contractual obligations of the undersigned, the undersigned hereby waives and releases any rights it has or may have through the date of its last Application for Payment to any and all Claims and liens related to the Project, including without limitation: Claims of payment, mechanic's liens, liens against funds, surety bond Claims, and Claims for breach of contract or unjust enrichment. The sole exception to this waiver and release is for any Claims the undersigned has made by properly and timely submitting a Claim as required by the Contract Documents. The undersigned acknowledges and agrees that this wavier and release is intended to be a comprehensive release of all Claims and liens related to the Project, including without limitation all Claims against the City, and the employees, board members, agents and representatives of any of the foregoing persons. The undersigned further certifies that this Agreement covers Claims and liens by all persons with which it did business related to the Project, including without limitation subcontractors and suppliers, through the date of its last Application for Payment. The undersigned represents that all such persons have signed an agreement in the form of this Agreement releasing any and all Claims and liens related to the Project, except for any Claims made by properly and timely submitting a Claim as required by the Contract Documents, a copy of which has been delivered to the City. The undersigned hereby represents and warrants that it has paid any and all welfare, pension, vacation, or other contributions required to be paid on account of the employment by the undersigned of any laborers on the Project.

This Agreement is for the benefit of, and may be relied upon by the City. The undersigned hereby agrees to indemnify, defend and hold harmless each of the foregoing, the Project, work or improvement, and real property from any and all Claims, or liens that are or should have been released in accordance with this Agreement.

Contractor Name:_____

Authorized Signature: _____

Title: _____

The foregoing instrument was acknowledged before me this _____, day of _____, 20____ by _____.

Signature and Seal of person taking acknowledgement:

_____

VI. PLANS/DRAWINGS

Plans and Drawing are available at

http://dublinohiousa.gov/bids-and-requests-for-proposals