CITY OF DUBLIN COMMUNITY RECREATION CENTER POOL RENOVATIONS

Project #16-002.0-FAC

5600 POST ROAD
DUBLIN, OH 43017
FOR

City of Dublin

DRAWING INDEX

GENERAL
G1-001 TITLE SHEET

PLUMBING
P-001 PLUMBING GENERAL NOTES, LEGENDS AND ABBREVIATIONS
PD-101 PLUMBING DEMOLITION PLAN
P-101 PLUMBING PLAN
P-701 PLUMBING ISOMETRICS

ELECTRICAL
E-001 ELECTRICAL LEGENDS AND NOTES
ED-101 ELECTRICAL DEMOLITION PLAN
E-101 ELECTRICAL PLAN
E-501 ELECTRICAL DETAILS

STRUCTURAL
S-101 STRUCTURAL SECTIONS & DETAILS

PROJECT NOTES:

1. ALL WORK TO BE DONE DURING NORMAL BUSINESS HOURS.
2. ALL WORK TO BE COORDINATED WITH NEW FLOOR AND OTHER IMPROVEMENTS DURING SHUT DOWN PERIOD.
3. OUTDOOR STAGING AREAS ARE AVAILABLE IF INDOOR STORAGE IS INSUFFICIENT. IF REQUIRED BY THE PROJECT THE OUTDOOR STAGING AREA SHALL BE IDENTIFIED IN THE PLANS AND SUBJECT TO APPROVAL BY ENGINEERING.
4. POOL AREAS ARE SCHEDULED TO BE CLOSED AND DRAINED ON JULY 17TH. ALL WORK SCHEDULED TO BE COMPLETED ON OR BEFORE SEPTEMBER 18TH. FINAL SCHEDULE TO BE ISSUED TO SUCCESSFUL BIDDERS AT TIME OF SELECTION.

SITE PLAN

NORTH

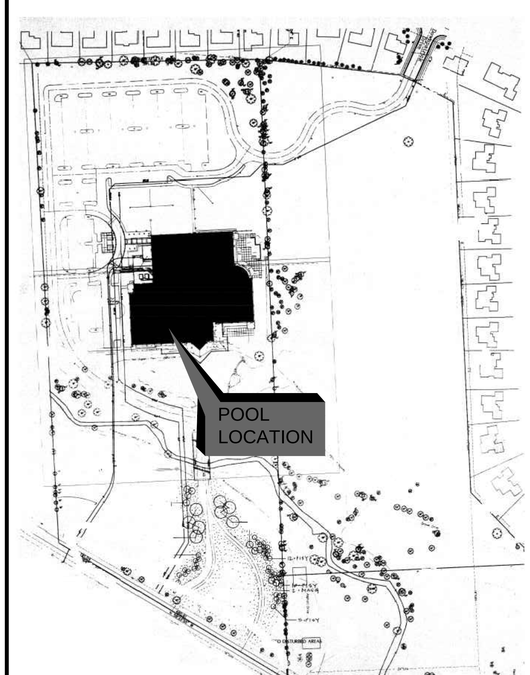

VICINITY MAP

NORTH

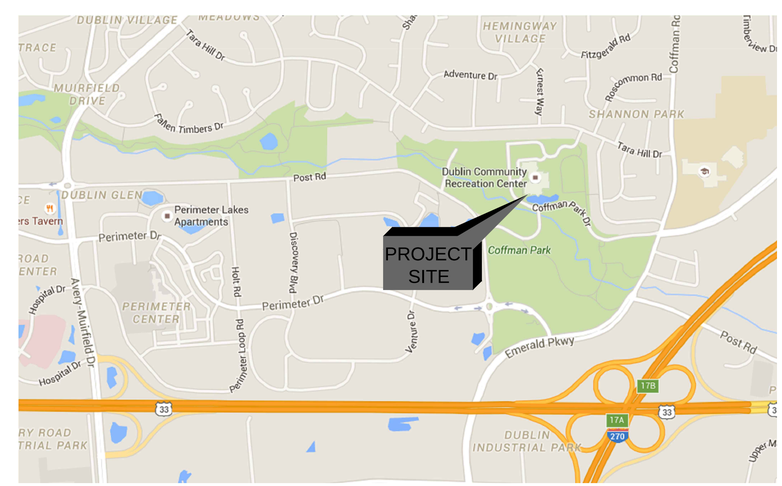

APPLICABLE CODES	
PLUMBING CODE	OPC 2011
ELECTRICAL CODE	NEC 2014
STRUCTURAL CODE	OBC 2011

OSPORTS
OSBORN SPORTS + RECREATION ARCHITECTURE
1100 Superior Avenue - Suite 300 | Cleveland, OH 44114
990 West Third Avenue - Suite 200 | Columbus, OH 43212
(614) 556-4272 www.osborn-eng.com

OSBORN ENGINEERING
1100 Superior Avenue - Suite 300 | Cleveland, OH 44114
990 West Third Avenue - Suite 200 | Columbus, OH 43212
(614) 556-4272 www.osborn-eng.com

RECREATION CENTER POOL RENOVATIONS

CITY OF DUBLIN COMMUNITY RECREATION CENTER

5600 POST ROAD

DUBLIN, OHIO 43017
(614) 410-4550

TAG	ISSUED	DATE
A	PERMIT	04.05.16
B	ISSUED FOR BID	04.19.16

Unless otherwise stated in Contract, The Osborn Engineering Company retains copyright ownership. Instruments of Service may only be used for the purpose described in the Contract. The Osborn Engineering Company may grant specific usage rights under license, and / or may transfer copyright ownership / assignment in writing. Reproduction, re-use or re-distribution of Instruments of Service is prohibited.

DRAWN BY RCY
CHECKED BY BL
CLIENT PROJ. NO. 16-002.0-FAC
OSBORN PROJ. NO. J20150324.000

TITLE SHEET

DRAWING NO.
G-001

P:\Dublin - City Of\J20150324.000 Rec Center Pool Repairs\Drawings\Arch\J20150324.000-G001.dwg
4/18/2016 3:00 PM Yoakum, Robert

PLUMBING NOTES

1. PROVIDE ALL MATERIALS AND EQUIPMENT AND PERFORM ALL LABOR REQUIRED TO INSTALL COMPLETE AND OPERABLE PLUMBING SYSTEMS AS INDICATED ON THE DRAWINGS, AS SPECIFIED, AND AS REQUIRED BY STATE AND LOCAL CODES.

2. PRIOR TO COMMENCING WORK, PLUMBING CONTRACTOR SHALL FIELD VERIFY, WITH THE USE OF X-RAY EQUIPMENT, PRIOR TO SAW CUTTING FLOOR, FOR INDOOR UNDERFLOOR UTILITIES, EXACT LOCATION OF ALL UTILITY SERVICES, INVERT ELEVATIONS OF UNDERFLOOR SANITARY LINES, AND SIZES OF PIPING TO BE RE-USED. PIPING TO AND FROM PUMPS IN PIT AREA OF MECHANICAL ROOM # 166 SERVICING THE WHIRLPOOL AND "LAZY RIVER" ARE TO REMAIN FULLY FUNCTIONAL AND NOT TO BE DISTURBED. THESE LOCATIONS APPLY EVEN IF ALTERNATE 1 IS NOT PERFORMED DURING THIS SHUT-DOWN PERIOD. THE CONTRACT DOCUMENT DRAWINGS FOR PLUMBING WORK ARE DIAGRAMMATIC AND ARE INTENDED TO CONVEY SCOPE AND GENERAL ARRANGEMENT ONLY.

3. INSTALL ALL PLUMBING FIXTURES, EQUIPMENT, AND APPURTENANCES IN ACCORDANCE WITH MANUFACTURERS' RECOMMENDATIONS, CONTRACT DOCUMENTS, AND APPLICABLE CODES AND REGULATIONS.

4. THE LOCATIONS OF ALL ITEMS SHOWN ON THE DRAWINGS OR CALLED FOR IN THE SPECIFICATIONS THAT ARE NOT DEFINITELY FIXED BY DIMENSIONS ARE APPROXIMATE ONLY. THE EXACT LOCATIONS NECESSARY TO SECURE THE BEST CONDITIONS AND RESULTS MUST BE DETERMINED BY THE PROJECT SITE CONDITIONS AND SHALL HAVE THE APPROVAL OF THE ENGINEER BEFORE BEING INSTALLED. DO NOT SCALE DRAWINGS.

5. COORDINATE CONSTRUCTION OF ALL PLUMBING WORK WITH STRUCTURAL, ELECTRICAL, ETC., SHOWN ON OTHER CONTRACT DOCUMENT DRAWINGS.

6. ALL PLUMBING WORK SHALL BE COORDINATED WITH ALL TRADES INVOLVED. OFFSETS IN PIPING AROUND OBSTRUCTIONS SHALL BE PROVIDED AT NO ADDITIONAL COST TO OWNER.

7. VERIFY EXACT LOCATIONS OF ALL EXISTING FLOOR CLEANOUTS AND TRENCH DRAINS AND COORDINATE WITH THE NEAREST AVAILABLE LENGTH WITH TRENCH DRAIN MODEL NUMBERS TO MATCH EXISTING LENGTHS UNLESS OTHERWISE NOTED. VIDEO TAPE EXISTING SANITARY PIPES IN THE POOL AREA(S) FOR AS-BUILT VERIFICATION AND FOR PROPER PLACEMENT WITH RESPECT TO SLOPES AND CONNECTIONS WITH EXISTING INVERTS. COORDINATE THE INSTALLATION WITH THE APPROPRIATE CONTRACTOR.

8. MAINTAIN A MINIMUM OF 6'-8" CLEARANCE TO UNDERSIDE OF PIPES AND SUSPENDED EQUIPMENT THROUGHOUT ACCESS ROUTES IN MECHANICAL ROOMS.

9. ALL TESTS SHALL BE COMPLETED BEFORE ANY PLUMBING EQUIPMENT OR PIPING INSULATION IS APPLIED.

10. WHERE TWO OR MORE ITEMS OF THE SAME TYPE OF EQUIPMENT ARE REQUIRED, THE PRODUCT OF ONE MANUFACTURER SHALL BE USED.

11. ALL MISCELLANEOUS STEEL REQUIRED TO ENSURE PROPER INSTALLATION SHALL BE FURNISHED AND INSTALLED BY THE PLUMBING CONTRACTOR.

12. ALL EQUIPMENT, PIPING, ETC. SHALL BE SUPPORTED AS REQUIRED TO PROVIDE A VIBRATION FREE INSTALLATION.

13. PROVIDE FLEXIBLE CONNECTIONS IN ALL PIPING SYSTEMS CONNECTED TO PUMPS AND OTHER EQUIPMENT WHICH REQUIRE VIBRATION ISOLATION. FLEXIBLE CONNECTIONS SHALL BE PROVIDED AS CLOSE TO THE EQUIPMENT AS POSSIBLE OR AS INDICATED ON THE DRAWINGS.

14. CONTRACTOR TO INFORM THE STRUCTURAL ENGINEER IN WRITING OF ANY SINGLE SUSPENDED LOAD IN EXCESS OF 400 LBS.

15. RUN ALL SANITARY PIPING WITH 1% MINIMUM GRADE UNLESS OTHERWISE NOTED. HORIZONTAL VENT PIPING SHALL BE GRADED TO DRIP BACK TO SOIL OR WASTE PIPE BY GRAVITY. 2" PIPING SHALL BE RUN AT 2% MINIMUM SLOPE.

16. ELEVATIONS AS SHOWN ON THE DRAWINGS ARE TO THE CENTERLINE OF ALL PRESSURE PIPING AND TO THE INVERT OF ALL GRAVITY PIPING.

17. ADJUST SEWER INVERTS TO KEEP TOPS OF PIPE IN LINE WHERE PIPE SIZES CHANGE.

18. PROVIDE SHUTOFF VALVES IN ALL DOMESTIC HOT AND COLD WATER PIPING SYSTEM BRANCHES.

19. INSTALL PIPING SO THAT ALL VALVES, STRAINERS, UNIONS, TRAPS, FLANGES, AND OTHER APPURTENANCES REQUIRING ACCESS ARE ACCESSIBLE.

20. INSTALL ALL PIPING WITHOUT FORCING OR SPRINGING AND CLEAR OF DOORS AND WINDOWS.

21. ALL ABOVE GROUND PIPING SHALL GRADE TO LOW POINTS. PROVIDE HOSE END DRAIN VALVES AT THE BOTTOM OF ALL RISERS AND LOW POINTS.

22. ALL VALVES (EXCEPT CONTROL VALVES) AND STRAINERS SHALL BE FULL SIZE (FULL PORT) OF PIPE BEFORE REDUCING SIZE TO MAKE CONNECTIONS TO EQUIPMENT AND CONTROLS AND SHALL BE ADJUSTED FOR SMOOTH AND EASY OPERATION.

23. PROVIDE ALL PLUMBING FIXTURES AND EQUIPMENT WITH ACCESSIBLE STOPS.

24. PROVIDE CLEANOUTS IN SANITARY DRAINAGE SYSTEMS AT ENDS OF RUNS, AT CHANGES IN DIRECTION, NEAR THE BASE OF STACKS, EVERY 100 FEET IN HORIZONTAL RUNS AND ELSEWHERE AS INDICATED. ALL CLEANOUTS SHALL BE FULL SIZE OF PIPE FOR PIPE SIZES 4 INCHES AND SMALLER AND SHALL BE 4 INCHES FOR PIPE SIZES LARGER THAN 4 INCHES.

25. ALL BALANCING VALVES SHALL BE PROVIDED WITH POSITION INDICATORS AND MAXIMUM ADJUSTABLE STOPS (MEMORY STOPS).

26. ALL FLOOR DRAINS AND FLOOR SINKS SHALL BE TRAP PRIMED. FLOOR DRAINS IN TOILET ROOMS SHALL BE PRIMED THROUGH THE NEAREST WATER CLOSET FLUSH VALVE. ALL OTHERS SHALL HAVE DEDICATED TRAP PRIMERS.

27. WATER AND DRAIN PIPING SHALL NOT BE RUN THROUGH OR ABOVE ELECTRICAL SWITCH GEAR OR ROOMS, ELEVATOR SHAFTS, ELEVATOR MACHINE ROOMS, OR TELEPHONE ROOMS.

28. THE PLUMBING CONTRACTOR SHALL BE RESPONSIBLE FOR ALL COMPONENTS, ADAPTERS, AND FITTINGS TO MAKE FINAL CONNECTIONS TO ALL PLUMBING FIXTURES AS WELL AS FIXTURES PROVIDED BY OTHER CONTRACTORS.

29. THE DRAWINGS AND SPECIFICATIONS ARE COMPLIMENTARY; WHATEVER IS CALLED FOR IN ONE SHALL BE REQUIRED AS IF CALLED FOR IN BOTH. WHERE CONFLICTS BETWEEN THE SPECIFICATIONS AND DRAWINGS MAY OCCUR, THE MOST COSTLY OF THE TWO OPTIONS SHALL TAKE PRECEDENCE.

PLUMBING ABBREVIATIONS

AAV	AIR ADMITTANCE VALVE	I.E.	INVERT ELEVATION
AFF	ABOVE FINISHED FLOOR	IW	INDIRECT WASTE
AFG	ABOVE FINISHED GRADE	IWH	INSTANTANEOUS WATER HEATER (ELECTRIC)
AD	AREA DRAIN	L	LAVATORY
AG	AIR GAP	LF	LAVATORY FAUCET
BEL	BELOW	MB	MOP BASIN
BFF	BELOW FINISHED FLOOR	NO	NORMALLY OPEN
BFG	BELOW FINISHED GRADE	NC	NORMALLY CLOSED
BFP	BACKFLOW PREVENTER	NPS	NOMINAL PIPE SIZE
BOP	BOTTOM OF PIPE	PC	PLUMBING CONTRACTOR
CA	COMPRESSED AIR	PRV	PRESSURE REDUCING VALVE
CO	CLEANOUT	PS	PREFAB SHOWER STALL
CW	COLD WATER (DOMESTIC)	PSIG	POUNDS PER SQUARE INCH GAUGE
DCDA	DOUBLE CHECK DETECTOR ASSEMBLY	PVC	POLYVINYL CHLORIDE
DD	DECK DRAIN	RD	ROOF DRAIN
DN	DOWN	RPBFP	REDUCED PRESSURE BACKFLOW PREVENTER
DS	DOWNSPOUT	RPDA	REDUCED PRESSURE DETECTOR ASSEMBLY
DWH	DOMESTIC WATER HEATER	RP	HOT WATER RECIRCULATION PUMP
DWG	DRAWING	RRW	RECYCLED RAINWATER
DWV	DRAIN, WASTE, AND VENT	SAN	SANITARY
ED	EMERGENCY ROOF DRAIN	SH	SHOWER FAUCET
EDS	EMERGENCY DOWNSPOUT	SI	SEDIMENT INTERCEPTOR
EEW	EMERGENCY EYEWASH	SR	SHOWER RECEPTOR
EWC	ELECTRIC WATER COOLER	SS	SERVICE SINK
(E)	EXISTING	SV	STACK VENT
FCO	FLOOR CLEANOUT	TD	TRENCH DRAIN
FCW	FILTERED COLD WATER	TMV	THERMOSTATIC MIXING VALVE
FHW	FILTERED HOT WATER	TP	TRAP PERIMER
FD	FLOOR DRAIN	TYP	TYPICAL
FF	FINISHED FLOOR	TW	TEMPERED WATER
FFD	FUNNEL FLOOR DRAIN	UG	UNDERGROUND
FG	FINISHED GRADE	UR	URINAL
FLR	FLOOR	V	VENT
FS	FLOOR SINK	VS	VENT STACK
G	NATURAL GAS	VTR	VENT THROUGH ROOF
GC	GENERAL CONTRACTOR	W	WASTE
GW	GREASE WASTE	WC	WATER CLOSET
HB	HOSE BIBB	WCO	WALL CLEANOUT
HD	HUB DRAIN	WH	WALL HYDRANT (FREEZEPROOF)
HW	HOT WATER (DOMESTIC)	WS	WASTE STACK
HWR	HOT WATER RECIRC.	WS	WASTE STACK

PLUMBING PIPING LEGEND

SYMBOL	DESCRIPTION
	SANITARY UNDERGROUND
	SANITARY ABOVEGROUND
	SANITARY VENT
	DOMESTIC COLD WATER
	DOMESTIC HOT WATER (110°F)
	DOMESTIC HOT WATER RECIRC (110°F)
140°	DOMESTIC HOT WATER (140°F)
140°	DOMESTIC HOT WATER RECIRC (140°F)
	EXISTING TO BE REMOVED

* CERTAIN ITEMS IN THE LEGEND ABOVE MAY NOT APPLY TO THIS PROJECT. DARK PIPING INDICATES NEW PIPING AND LIGHT INDICATES EXISTING.

PIPE LINE DEVICES

- CONNECTION BETWEEN NEW AND EXISTING PIPING
- UNION
- QUICK CONNECTOR
- CAP OR PLUG
- BLIND FLANGE
- CONNECTION - TOP
- CONNECTION - BOTTOM
- ELBOW - TURNED DOWN
- ELBOW - TURNED UP
- CONNECT TO EXISTING
- FLOOR DRAIN W/TRAP
- FLOOR SINK W/TRAP
- MOP BASIN FAUCET OR SHOWER HEAD
- VENT TO ROOF
- VENT
- AUTOMATIC VENT
- MANUAL VENT
- STRAINER
- DRAIN (D)
- DRAIN VALVE (DV)

VALVES

- GATE VALVE
- PLUG VALVE
- BALL VALVE
- GLOBE VALVE
- NEEDLE VALVE
- BUTTERFLY VALVE
- ANGLE VALVE
- THREE WAY VALVE
- BALANCING COCK
- THERMOSTATICALLY CONTROLLED VALVE
- CHECK VALVE
- SOLENOID VALVE
- MOTOR OPERATED VALVE
- PRESSURE RELIEF VALVE
- PRESSURE REGULATING VALVE (SELF-CONTAINED)

* CERTAIN ITEMS IN THE LEGEND ABOVE MAY NOT APPLY TO THIS PROJECT. DARK PIPING INDICATES NEW PIPING AND LIGHT INDICATES EXISTING.

OSPORTS
OSBORN SPORTS + RECREATION ARCHITECTURE
1100 Superior Avenue - Suite 300 | Cleveland, OH 44114
990 West Third Avenue - Suite 200 | Columbus, OH 43212
(614) 556-4272 www.osborn-eng.com

OSBORN ENGINEERING
1100 Superior Avenue - Suite 300 | Cleveland, OH 44114
990 West Third Avenue - Suite 200 | Columbus, OH 43212
(614) 556-4272 www.osborn-eng.com

RECREATION CENTER POOL RENOVATIONS

CITY OF DUBLIN COMMUNITY RECREATION CENTER

5600 POST ROAD

DUBLIN, OHIO 43017
(614) 410-4550

TAG	ISSUED	DATE
A	PERMIT	04.05.16
B	ISSUED FOR BID	04.19.16

Unless otherwise stated in Contract, The Osborn Engineering Company retains copyright ownership. Instruments of Service may only be used for the purpose described in the Contract. The Osborn Engineering Company may grant specific usage rights under license, and / or may transfer copyright ownership / assignment in writing. Reproduction, re-use or re-distribution of Instruments of Service is prohibited.

DRAWN BY RCY
CHECKED BY RFS
CLIENT PROJ. NO. 16-002.0-FAC
OSBORN PROJ. NO. J20150324.000

PLUMBING GENERAL NOTES, LEGENDS AND ABBREVIATIONS

DRAWING NO.

P-001

P:\Dublin - City Of\J20150324.000 Rec Center Pool Repairs\Drawings\Mech\J20150324.000-P001.dwg
4/18/2016 3:12 PM Yoakum, Robert

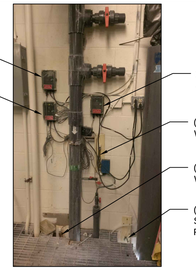

NOTE: (E) WHIRLPOOL AUTO-FILL SENSOR SYSTEM FUNCTIONS AS INTENDED, (E) LEISURE POOLS AUTO-FILL SYSTEM IS STILL INSTALLED BUT NOT FUNCTIONING PROPERLY, (E) LAP POOL AUTO-FILL SYSTEM HAS BEEN REMOVED AND POOL WATER LEVEL PIPE TO PREVIOUS STANDPIPE LOCATION WAS COVERED UP IN A PREVIOUS POOL RESURFACING PROJECT AND A NEW WALL PENETRATION WILL BE REQUIRED. NEW SYSTEMS WILL REPLACE EXISTING SYSTEMS IN THE SAME LOCATIONS USING TRANSPARENT PIPE FOR NEW STANDPIPES. TURN OVER OPERATION AND MAINTENANCE MANUALS PROVIDED WITH THE AUTO-FILL SENSOR PRODUCT PACKAGING TO OWNER PER TWO YEAR WARRANTY STIPULATION STATED IN MANUAL(S).

2 AUTO-FILL SENSORS

N.T.S. LOCATED IN MECHANICAL ROOM #166

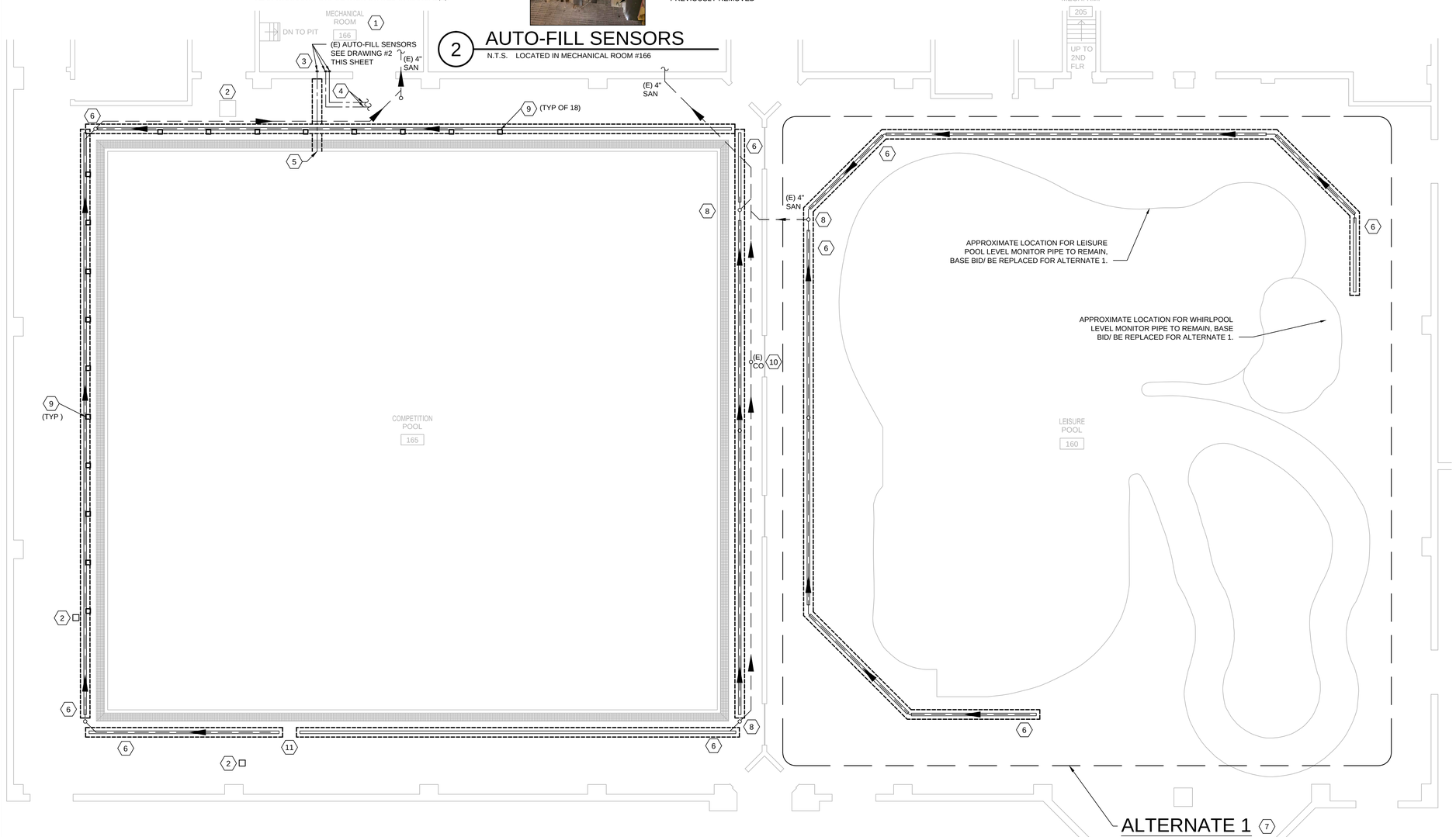

1 LEISURE AND COMPETITION POOLS PLUMBING DEMOLITION FLOOR PLAN

SCALE: 1/8" = 1'-0"

GENERAL DEMO NOTES

A. ALL WORK SHOWN IS BASED ON FIELD VISITS AND EXISTING BUILDING DRAWINGS. IF CONDITIONS ARE DIFFERENT THAN SHOWN, CONTACT ENGINEER PRIOR TO STARTING DEMOLITION.
B. DEMOLITION WORK IS SHOWN IN HEAVY, DASHED LINES.
C. DEMOLITION WORK SHOWN MAY NOT INCLUDE ALL WORK TO BE DONE. IN GENERAL, UNLESS OTHERWISE SPECIFIED, SYSTEMS REMOVED SHALL INCLUDE
   -PLUMBING FIXTURES
   -PLUMBING EQUIPMENT
   -SANITARY AND VENT PIPING
      -HOT AND COLD WATER PIPING
   -VALVES, CLEANOUTS, WATER HAMMER ARRESTORS
   -DRAINS
D. NOTIFY ENGINEER OF ANY PLUMBING NOT SHOWN ON PLAN BEFORE BEGINNING ANY DEMOLITION.
E. ALL HOLES AND OPENINGS IN FLOOR LEFT FROM REMOVAL OF EQUIPMENT AND PIPING SHALL BE PATCHED AND SEALED TO MATCH EXISTING.
F. IF PIPE, INSULATION, OR EQUIPMENT TO REMAIN IS DAMAGED IN APPEARANCE OR IS UNSERVICEABLE, REMOVE DAMAGED OR UNSERVICEABLE PORTIONS AND REPLACE WITH NEW PRODUCTS OF EQUAL CAPACITY AND QUALITY.
G. PLUMBING CONTRACTOR TO VERIFY LOCATION, SLOPE, AND INVERT FOR ALL UNDER FLOOR PIPING BEFORE ROUGHING IN FIXTURES.
H. TRENCH DRAIN REPLACEMENT WILL BE ONE FOR ONE, UNLESS OTHERWISE NOTED, CENTERED ON EXISTING TRENCH DRAINS. NEW DRAINS ARE SLOPED, SEE STACK DRAWING ON SHEET P701. FOR DESIGN INTENT AND CHANGES TO OUTLET LOCATION(S), TO UPGRADE FROM LEVEL DRAINS TO SLOPED DRAINS. MAINTAIN EXISTING PRIMARY SANITARY DRAINAGE AND VENTING SYSTEM(S).

SHEET KEYNOTES

1. EXISTING PLUMBING FIXTURES IN MECHANICAL ROOM TO REMAIN UNLESS OTHERWISE NOTED.
2. EXISTING ACCESS COVERS TO REMAIN.
3. REMOVE AUTO-FILL SENSOR SYSTEMS ALONG SOUTH WALL OF MECHANICAL ROOM TO REPLACED WITH SIMILAR EQUIPMENT IN THE SAME LOCATIONS. SEE DRAWING #2 ON THIS SHEET FOR MORE INFORMATION.
4. APPROXIMATE LOCATIONS OF PREVIOUS WATER LEVEL MONITORING PIPES TO THE STANDPIPE FOR THE WHIRLPOOL AND LEISURE POOL SENSORS. RE-USE FUNCTIONING WHIRLPOOL WATER PIPE. FIELD VERIFY IF LEISURE POOL WATER LEVEL MONITORING PIPE IS FUNCTIONING, WITHOUT CLOG. FIELD VERIFY ACTUAL LOCATION AND RE-USE, IF FUNCTIONAL. IF ALTERNATE 1 IS NOT ACCEPTED THEN NEW 1/2" SEAMLESS WATER LEVEL MONITORING PIPES WILL BE EXTENDED WITH THE NEW TRENCH FOR TRENCH DRAIN AS FAR AS POSSIBLE AND ADDITIONAL TRENCH TO NEW VALVE PIT IN THE LEISURE POOL SPACE FOR CONNECTION AND CONTINUATION FROM VALVE PIT IN A LATER PHASE, REFER TO SHEET P101 FOR PLANNED STAINLESS STEEL HATCH LOCATION. X-RAY PLANNED HATCH/ PIT LOCATION AND LOCATE EXISTING WATER LEVEL MONITORING PIPES TO REMAIN AND DO NOT DISTURB FOR BASE BID.
5. ALTERNATE 1: WATER PIPES TO MONITOR WHIRLPOOL AND LEISURE POOL WILL BE REPLACED WITH NEW PIPING UNDER ALTERNATE 1 BID SEE STRUCTURAL SHEET #S-101 FOR PROXIMITY OF NEW PIPE ALONG SIDE TRENCH DRAIN REPLACEMENT WORK. SEE NOTE #11 BELOW.
6. APPROXIMATE LOCATIONS OF PREVIOUS WATER PIPES TO THE STANDPIPE FOR THE LAP POOL SENSOR. ORIFICE TO POOL WAS PREVIOUSLY COVERED UP DURING POOL RESURFACING PROJECT. FIELD VERIFY ACTUAL LOCATION AND CUT FLOOR REPLACING EXISTING WATER PIPE WITH NEW, CENTERED ON EXISTING WALL PENETRATION TO PIT AREA OF MECHANICAL RM. #166 AND PROVIDE FULLY FUNCTIONAL AUTO-FILL SYSTEM. COORDINATE WITH NEW TRENCH DRAIN LOCATION AND DEPTH. PATCH POOL SURFACE MATCHING EXISTING.
7. REMOVE EXISTING NON-SLOPING TRENCH DRAINS IN PREPARATION FOR NEW SLOPING TRENCH DRAINS IN SIMILAR LOCATION(S). EXISTING DRAIN PIPE ROUTED UNDER TRENCH DRAINS TO BE REMOVED. WIDTH AND DEPTH OF TRENCHING TO BE KEPT TO A MINIMUM IN STRICT ACCORDANCE TO STRUCTURAL REQUIREMENTS SHOWN ON SHEET S-101. NEW TRENCH DRAINS ARE SLOPPED AND ARE SUPPLIED IN ONE METER OR HALF METER SECTIONS COORDINATE WITH NEW WORK SHOWN ON SHEET P-101 FOR SLOPE DIRECTION, OUTLET CONNECTION AND SIDE OF OUTLET WHICH WILL DIFFER FROM EXISTING TRENCH DRAIN REQUIREMENTS.
8. PROVIDE PRICE FOR ALTERNATE 1 WORK FOR LEISURE POOL WITH SAME DEMO & NEW WORK REQUIREMENTS AS BASE BID LAP POOL TRENCH DRAIN AND CLEANOUT REPLACEMENT.
9. DISMANTLE AND REMOVE EXISTING CLEANOUT COVER AND RETURN TO OWNER. REMOVE VERTICAL SECTION AND EXISTING TRAP IN PREPARATION OF NEW CONNECTIONS TO VERTICAL PIPE AT DIFFERENT INVERTS THAN EXISTING. SEE SHEET P-101 FOR NEW WORK SCOPE FOR PLANNED FLOOR DRAIN IN LIEU OF CLEANOUT IN SAME LOCATION.
10. COORDINATE WITH ELECTRICIAN FOR ELIMINATION OF THE EXISTING TOUCH PAD SENSOR CONNECTION BOXES PRIOR TO TRENCH REMOVAL, TYPICAL OF (18).
11. EXISTING CLEANOUT TO REMAIN. COORDINATE WITH TRENCHING WORK FOR BASE BID. EXTEND NEW 1/2" PIPING ALONG SIDE NEW TRENCH FOR LAP POOL WATER LEVEL MONITORING AND TRENCH DRAINS TO THIS LOCATION. PROVIDE TRACE WIRE TO BE ENERGIZED FROM THE PIT IN THE MECHANICAL ROOM FOR FUTURE LOCATING ABILITY. EXTEND TWO SPARE LINES. SEE STRUCTURAL SHEET #S-101 FOR PROXIMITY OF NEW PIPE ALONG SIDE TRENCH DRAIN REPLACEMENT WORK. PATCH POOL SURFACE MATCHING EXISTING AND COORDINATE WITH NEW SURFACE PAD FLOORING INSTALLATION.
12. EXISTING GAP BETWEEN TRENCH DRAINS WILL BE REPLACE WITH TRENCH DRAIN AND SLOPED IN THE DIRECTION SHOWN ON SHEETS P101 AND P701.

KEY PLAN

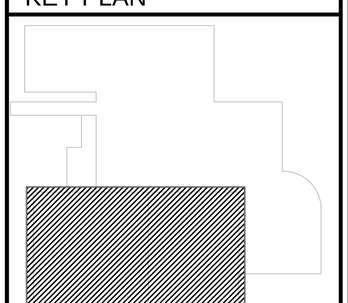

OSPORTS
OSBORN SPORTS + RECREATION ARCHITECTURE
1100 Superior Avenue - Suite 300 | Cleveland, OH 44114
990 West Third Avenue - Suite 200 | Columbus, OH 43212
(614) 556-4272
www.osborn-eng.com

OSBORN ENGINEERING
1100 Superior Avenue - Suite 300 | Cleveland, OH 44114
990 West Third Avenue - Suite 200 | Columbus, OH 43212
(614) 556-4272
www.osborn-eng.com

RECREATION CENTER POOL RENOVATIONS

CITY OF DUBLIN COMMUNITY RECREATION CENTER

5600 POST ROAD

DUBLIN, OHIO 43017
(614) 410-4550

TAG	ISSUED	DATE
A	PERMIT	04.05.16
B	ISSUED FOR BID	04.19.16

Unless otherwise stated in Contract, The Osborn Engineering Company retains copyright ownership. Instruments of Service may only be used for the purpose described in the Contract. The Osborn Engineering Company may grant specific usage rights under license, and / or may transfer copyright ownership / assignment in writing. Reproduction, re-use or re-distribution of Instruments of Service is prohibited.

DRAWN BY RCY
CHECKED BY RFS
CLIENT PROJ. NO. 16-002.0-FAC
OSBORN PROJ. NO. J20150324.000

PLUMBING DEMOLITION PLAN

DRAWING NO.

PD-101

P:\Dublin - City Of\J20150324.000 Rec Center Pool Repairs\Drawings\Mech\J20150324.000- PD101.dwg
4/18/2016 3:13 PM Yoakum, Robert

PLUMBING FIXTURE SCHEDULE

MARK	DESCRIPTION	MANUFACTURER	MODEL	CW	HW	TRAP	DRAIN	VENT	REMARKS
FD-1	FLOOR DRAIN	NDS	# 920B	-	-	4"	4"	3"	6"X6" SQUARE FLOOR DRAIN WITH STYRENE ADAPTOR, CONNECTS TO 4" SCHEDULE 40 PVC PIPE WITH REMOVABLE SATIN BRASS ADA & HEEL-PROOF GRATE AND DEEP TRAP BELOW TRENCH DRAIN WASTE CONNECTOIN(S). THIS TO REPLACE THE EXISTING CLEAN-OUT LOCATIONS SERVING THE EXISTING TRENCH DRAINS, WHERE SHOWN.
TD-X	TRENCH DRAIN	NDS	# DS-SECTION	-	-	-	4"	-	SECTIONAL NON-METALLIC SLOPED TRENCH DRAIN 48" IN LENGTH PER SECTION WITH TWO (2) 24" GRATES PER SECTION. PROVIDE SAND COLOR, ADA CLASS C GRATE BY NDS DURA SLOPE # DS-090N FOR 1ST SECTION. SEE STRUCTURAL DETAIL SHEET S-101 FOR MORE INFORMATION. SECTION LENGTHS ARE INDICATED ON PLANS VIA THE TAG (IF TRENCH DRAIN IS 14 FEET LONG THE CORRESPONDING TAG IS TD-14)

NOTES:
CONTRACTOR MAY SUBMIT NON-METALLIC EQUAL FIXTURES FOR APPROVAL.
INSTALL PER MANUFACTURERS RECOMMENDATIONS.

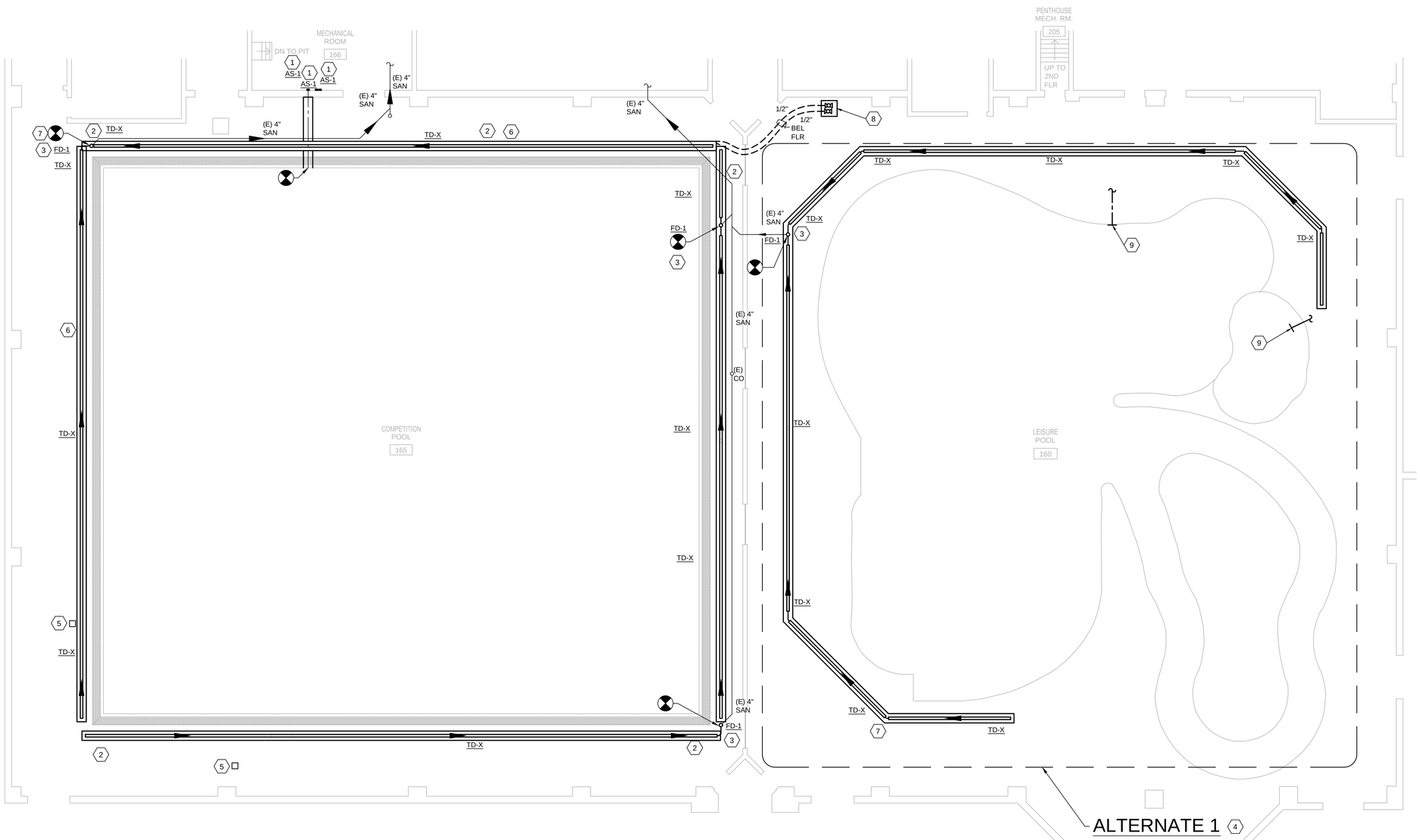

PLUMBING EQUIPMENT SCHEDULE

MARK	DESCRIPTION	MANUFACTURER	MODEL	CW	HW	REMARKS
AS-1	AUTO-FILL SENSOR	JANDY	LEV*OLOR* # K-1100	3/4"	-	FURNISH AND INSTALL POOL AUTO-FILL SENSORS AS INDICATED ON PLANS AND REMOTE SOLENOID VALVES REPLACING EXISTING SOLENOID VALVES AT EXISTING 1" BY PASS FOR LAP POOL, LEISURE POOL AND WHIRLPOOL WITH BY PASSES REMAINING FUNCTIONAL. USE THE FACTORY PRESET JUMPER CONFIGURATION OF 2O MINUTE SAFETY LOCKOUT FOR AUTOMATIC FILL SHUT-OFF TO PREVENT OVERFILL. UNITS COME FROM FACTORY WIRED FOR 220V. CHANGE POWER SUPPLY WIRING TO 110V PER MANUFACTURERS INSTRUCTIONS. COORDINATE WITH E.C..

NOTES:
CONTRACTOR MAY SUBMIT EQUAL EQUIPMENT FOR APPROVAL UP UNTIL TO 10 DAYS PRIOR TO SEALED BID DUE DATE.
INSTALL PER MANUFACTURERS RECOMMENDATIONS.

PLAN NORTH

0' 2' 4' 8' 16'

1 LEISURE AND COMPETITION POOLS PLUMBING FLOOR PLAN

SCALE: 1/8" = 1'-0"

GENERAL NOTES

A. REFER TO THE PLUMBING SYMBOL, LEGEND, NOTES AND PLUMBING SPECIFICATIONS SHEETS.
B. THESE DRAWINGS ARE DIAGRAMMATIC AND INDICATE THE GENERAL EXTENT OF WORK. THE CONTRACTOR SHALL BE RESPONSIBLE FOR COORDINATION AND PROPER INSTALLATION OF ALL PLUMBING SYSTEMS.
C. THE CONTRACTOR SHALL PROVIDE ALL MISCELLANEOUS SUPPORTING STEEL ETC. FOR THE PROPER INSTALLATION OF ALL PLUMBING SYSTEMS.
D. THE CONTRACTOR SHALL COORDINATE FLOOR, WALL AND ROOF PENETRATIONS WITH THE GENERAL CONTRACTOR.
E. PIPING SHALL NOT BE LOCATED IN ELECTRICAL ROOMS OR OVER THE TOP OF ANY ELECTRICAL PANELS OR EQUIPMENT.
F. WATER HAMMER PROTECTION SHALL BE PROVIDED WHERE REQUIRED PER OPC 604.9.

SHEET KEYNOTES

1. FURNISH AND INSTALL NEW SWIMMING POOL AUTO-FILL SENSOR TAGGED "AS-1" AND ADDITIONAL SYSTEM COMPONENTS AS DESCRIBED AND AS NEEDED FOR A FULLY FUNCTIONAL AUTOMATED SYSTEM. PERFORM FINAL TEST DEMONSTRATION FOR OWNERS REPRESENTATIVE(S) AND RECOMMEND SERVICE SCHEDULE BASED ON SENSOR O & M DOCUMENTS PACKAGED WITH UNITS FOR TWO YEARS.
2. FURNISH AND INSTALL NEW TRENCH DRAIN ASSEMBLY TO THE SAME OR NEAREST TOTAL LENGTH TO MATCH THE EXISTING TOTAL LENGTH WITH SECTIONS TAGGED "TD-X" AS SHOWN ON PLAN AND STACK. FOR LAP POOL CENTER TOTAL LENGTH OF TRENCH DRAIN TO THE CENTER OF THE LENGTH OF THE EDGE OF THE SWIMMING POOL. FOR LEISURE POOL, ALTERNATE 1, ORDER TO NEAREST TOTAL LENGTH AND CENTER PER EXISTING TRENCH DRAIN TOTAL LENGTH. IN ALL CASES WHERE THE EXISTING LENGTH CAN NOT BE MATCHED THEN SELECT NEAREST SHORTER TOTAL LENGTH.
3. FURNISH AND INSTALL NEW FLOOR DRAIN TAGGED FD-1 REPLACING EXISTING CLEANOUT LOCATION WITH 4" IN-LINE TRAP SEAL BY **SURE SEAL #SS4009V**. RECONNECT TO VENT AND PROVIDE NEW TRAP, EXTEND 4" SCHEDULE 40 PVC PIPE AND CONNECT TO EXISTING AT APPROPRIATE INVERT LOCATION BASED ON 1/8" SLOPE.
4. AREA OF WORK FOR ALTERNATE 1 - TRENCH DRAIN REPLACEMENT.
5. POOL ACCESS COVER TO REMAIN.
6. RELOCATE ANY DISC SHAPED HOLDERS FOR SWIM MEET FLAG POLES DISTURBED BY THIS PROJECT. OFFSET PERPENDICULAR FROM THE SAME DISTANCE ALONG POOL EDGE AS EXISTING. PRELIMINARY DIRECTION TO MARK EXISTING LOCATION AND FINAL LOCATION APPROVAL BY OWNERS REPRESENTATIVE. TYPICAL ALL DISTURBED DISKS.
7. SLOPE PIPING FROM END OF TRENCH DRAINS TO THE BEGINNING OF THE NEXT TRENCH DRAINS, TYPICAL WHERE APPLICABLE. COORDINATE WITH THE INLET INVERT FOR THE SKIPPED SECTIONAL MODEL NUMBER. THIS APPLIES TO ALTERNATE 1 AS WELL.
8. FOR BASE BID WITHOUT ALTERNATE 1, EXTEND FUTURE POOL LEVEL MONITORING PIPES, MATCHING EXISTING ROLLED TUBING TO NOT HAVE ANY FITTINGS BELOW THE FLOOR, TO THIS LOCATION. PROVIDE A 28" x 28" ACCESS PIT WITH STAINLESS STEEL GRATE WITH LIFT UP ACCESS LID. MAKE FINAL CONNECTION TO IN-LINE BALL VALVE AND LEAVE IN SHUT-OFF POSITION.
9. FOR ALTERNATE 1, EXTEND NEW SEAMLESS POOL LEVEL MONITOR PIPE TO SAME LOCATION REPLACING EXISTING. REPLACE EXISTING LOUVERED COVER IF DAMAGED, OTHERWISE REUSE IN SAME LOCATION.

KEY PLAN

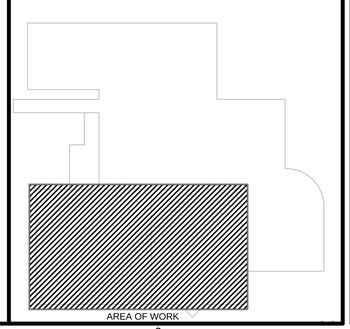

OSPORTS
OSBORN SPORTS + RECREATION ARCHITECTURE
1100 Superior Avenue - Suite 300 | Cleveland, OH 44114
990 West Third Avenue - Suite 200 | Columbus, OH 43212
(614) 556-4272 www.osborn-eng.com

OSBORN ENGINEERING
1100 Superior Avenue - Suite 300 | Cleveland, OH 44114
990 West Third Avenue - Suite 200 | Columbus, OH 43212
(614) 556-4272 www.osborn-eng.com

RECREATION CENTER POOL RENOVATIONS

CITY OF DUBLIN COMMUNITY RECREATION CENTER

5600 POST ROAD

DUBLIN, OHIO 43017
(614) 410-4550

TAG	ISSUED	DATE
A	PERMIT	04.05.16
B	ISSUED FOR BID	04.19.16

Unless otherwise stated in Contract, The Osborn Engineering Company retains copyright ownership. Instruments of Service may only be used for the purpose described in the Contract. The Osborn Engineering Company may grant specific usage rights under license, and / or may transfer copyright ownership / assignment in writing. Reproduction, re-use or re-distribution of Instruments of Service is prohibited.

DRAWN BY RCY
CHECKED BY RFS
CLIENT PROJ. NO. 16-002.0-FAC
OSBORN PROJ. NO. J20150324.000

PLUMBING PLAN

DRAWING NO.
P-101

P:\Dublin - City Of\J20150324.000 Rec Center Pool Repairs\Drawings\Mech\J20150324.000-P101.dwg
4/18/2016 3:12 PM Yoakum, Robert

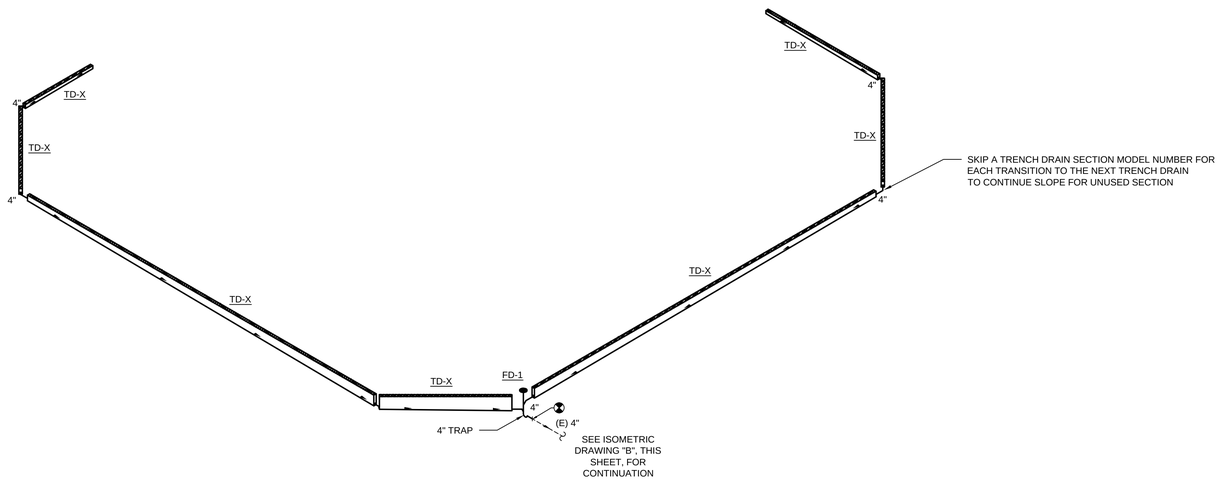

A PLUMBING SANITARY ISOMETRIC - LEISURE POOL

ALTERNATE 1

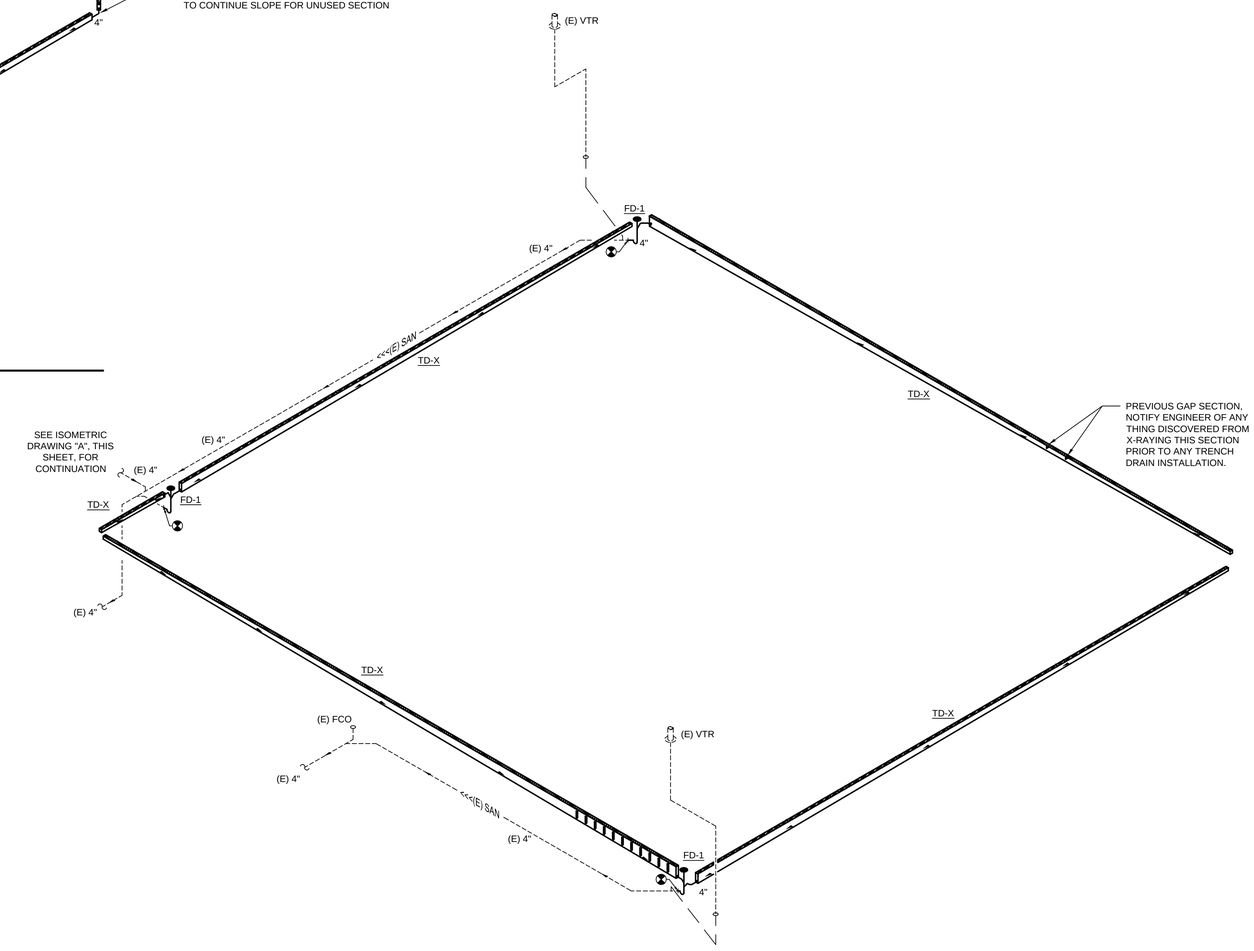

B PLUMBING SANITARY ISOMETRIC - LAP POOL

BASE BID

OSPORTS

OSBORN SPORTS + RECREATION ARCHITECTURE
1100 Superior Avenue - Suite 300 | Cleveland, OH 44114
990 West Third Avenue - Suite 200 | Columbus, OH 43212
(614) 556-4272 www.osborn-eng.com

OSBORN ENGINEERING
1100 Superior Avenue - Suite 300 | Cleveland, OH 44114
990 West Third Avenue - Suite 200 | Columbus, OH 43212
(614) 556-4272 www.osborn-eng.com

RECREATION CENTER POOL RENOVATIONS

CITY OF DUBLIN COMMUNITY RECREATION CENTER

5600 POST ROAD

DUBLIN, OHIO 43017
(614) 410-4550

TAG	ISSUED	DATE
A	PERMIT	04.05.16
B	ISSUED FOR BID	04.19.16

Unless otherwise stated in Contract, The Osborn Engineering Company retains copyright ownership. Instruments of Service may only be used for the purpose described in the Contract. The Osborn Engineering Company may grant specific usage rights under license, and / or may transfer copyright ownership / assignment in writing. Reproduction, re-use or re-distribution of Instruments of Service is prohibited.

DRAWN BY RCY
CHECKED BY RFS
CLIENT PROJ. NO. 16-002.0-FAC
OSBORN PROJ. NO. J20150324.000

PLUMBING ISOMETRICS

DRAWING NO.

P-701

P:\Dublin - City Of\J20150324.000 Rec Center Pool Repairs\Drawings\Mech\J20150324.000-P701.dwg
4/18/2016 3:13 PM Yoakum, Robert

ELECTRICAL SYMBOL LEGEND

NOTE: NOT ALL SYMBOLS ARE USED

SYMBOL	DESCRIPTION
HALF TONE LINE:	DENOTES BACKGROUND OR EXISTING
THIN SOLID LINES:	DENOTES DEVICES, EQUIPMENT, ETC. EXISTING TO REMAIN
DASHED LINES:	DENOTES DEVICES, EQUIPMENT, ETC. TO BE REMOVED
HEAVY SOLID LINES:	DENOTES NEW OR RELOCATED DEVICES, EQUIPMENT, ETC.
HEAVY PHANTOM LINES:	DENOTES NEW OR RELOCATED CONDUIT, EQUIPMENT, ETC. UNDERGROUND OR BELOW GRADE
NP-1,3,5	HOME RUN TO PANELBOARD, CIRCUIT DESIGNATION ADJACENT TO ARROW, 'NP-1,3,5' DENOTES HOMERUN TO PANELBOARD 'NP' WITH WIRING CONNECTED TO CIRCUITS 1, 3, AND 5.
	DENOTES NEW OR EXISTING CONDUIT GOING DOWN
	DENOTES NEW OR EXISTING CONDUIT GOING UP
	3/4-INCH BY 10 FEET 0 INCH LONG COPPER-CLAD GROUND ROD.
J	JUNCTION BOX
PB	PULL BOX
TB	TAP BOX
+"HH" XX-YY	DUPLEX RECEPTACLE, 20 AMPERE, 125 VOLT, 2 POLE, 3 WIRE GROUNDING TYPE, NEMA 5-20R, MOUNTED 18"A.F.F. UNLESS OTHERWISE NOTED (+HH"). CIRCUIT # AS INDICATED (XX). PANEL AS INDICATED (YY).
GFCI +"HH" XX-YY	GROUND FAULT INTERRUPTER TYPE DUPLEX RECEPTACLE, 20 AMPERE, 125 VOLT, 2 POLE, 3 WIRE GROUNDING TYPE, NEMA 5-20R, MOUNTED 18" A.F.F. UNLESS OTHERWISE NOTED (+HH"). PANEL # AS INDICATED (XX). CIRCUIT AS INDICATED (YY).
	DISTRIBUTION PANEL 120/208 VOLT, 3-PHASE, 4-WIRE
	DISTRIBUTION PANEL 277/480 VOLT, 3-PHASE, 4-WIRE
	SURFACE PANELBOARD 120/208 VOLT, 3-PHASE, 4-WIRE
	SURFACE PANELBOARD 277/480 VOLT, 3-PHASE, 4-WIRE
	RECESSED PANELBOARD 120/208 VOLT, 3-PHASE, 4-WIRE
	RECESSED PANELBOARD 277/480 VOLT, 3-PHASE, 4-WIRE
LCP	SURFACE MOUNTED LIGHTING CONTROL PANELBOARD
LCP	RECESSED LIGHTING CONTROL PANELBOARD
ZZ-WW X,y	120/277V, 20A TOGGLE SWITCH: "X" -SINGLE POLE, 3-THREE WAY, 4-FOUR WAY, D-DIMMER, OC-OCCUPANCY SENSOR, ws-WALL SWITCH OC, ts-DIGITAL TIME SWITCH OC, pi-PASSIVE INFRARED OC, us-ULTRASONIC OC, dt-DUAL TECH. OC, LV-LOW VOLTAGE, KS-KEY SWITCH, P-PILOT LIGHT. LOWER CASE INDICATES SWITCH #, ZZ-WW INDICATES CIRCUIT.
VT	POTENTIAL (VOLTAGE) TRANSFORMER
CT	CURRENT TRANSFORMER
	TRANSFORMER
	SWITCH AND FUSE UNIT (LOW VOLTAGE)
	SWITCH AND FUSE UNIT (HIGH VOLTAGE)
XX AT YYAF	CIRCUIT BREAKER, "XX" TRIP SIZE, "YY" FRAME SIZE
	FUSE
	DRAWOUT CIRCUIT BREAKER (LOW VOLTAGE)
52	DRAWOUT CIRCUIT BREAKER (HIGH VOLTAGE)
	LOAD INTERRUPTER SWITCH (HIGH VOLTAGE)
	GROUND

ABBREVIATIONS

AC	ABOVE COUNTER	GND	GROUND
AFF	ABOVE FINISHED FLOOR	G.V.	GENSET VENDOR
AFG	ABOVE FINISHED GRADE	HSP	HOUSE SERVICE PANEL
AHU	AIR HANDLING UNIT	IP	INVERTER PANEL
AST	ABOVEGROUND STORAGE TANK	LP	LIGHTING PANEL
ATS	AUTOMATIC TRANSFER SWITCH	MCC	MOTOR CONTROL CENTER
BSI	BUILDING SYSTEM INTERFACE	MDP	MAIN DISTRIBUTION PANEL
C	CONDUIT	N.I.C.	NOT IN CONTRACT
CAC	CEILING MOUNTED CAMERA	(N)	NEW WORK
CAW	WALL MOUNTED CAMERA	NL	NIGHT LIGHT
C.B.	CIRCUIT BREAKER	PNL	PANEL
CKT	CIRCUIT	PP	POWER PANEL
CP	CONTROL PANEL	RGS	RIGID GALVANIZED STEEL
CON.	CONTRACTOR	(R)	RELOCATED
CT	CURRENT TRANSFORMER	(R&R)	REMOVE AND RELOCATE
(D&R)	DISCONNECT AND REMOVE	(REP)	REPLACE
DDC	DIRECT DIGITAL CONTROL	RP	RECEPTACLE PANEL
DP	DISTRIBUTION PANEL	SE	SERVICE ENTRANCE
(E)	EXISTING	SWBD	SWITCHBOARD
EF	EXHAUST FAN	TP	TECHNOLOGY POWER PANEL
EG	EQUIPMENT GROUND	UC	UNDER COUNTER
EL	EMERGENCY LIGHTING	U.G.	UNDERGROUND
EMT	ELECTRICAL METALLIC TUBING	UST	UNDERGROUND STORAGE TANK
EWC	ELECTRIC WATER COOLER	UPS	UNINTERRUPTIBLE POWER SUPPLY
FACP	FIRE ALARM CONTROL PANEL	VP	VANDAL PROOF
GAP	GENSET ANNUNCIATOR PANEL	WIU	WHILE IN USE
GFCI	GROUND FAULT CIRCUIT INTERUPTER	WP	WEATHERPROOF

GENERAL ELECTRICAL DEMOLITION NOTES:

1. REMOVE ALL ELECTRICAL EQUIPMENT, DEVICES, BOXES, CONDUIT AND WIRE IN THE AREA OF NEW CONSTRUCTION UNLESS OTHERWISE NOTED. CONDUIT, WIRE AND ELECTRIC DEVICES WHICH MAY PASS THRU THE AREA OF NEW CONSTRUCTION AND/OR MAY BE AFFECTED BY DEMOLITION SHALL REMAIN OR, IF REQUIRED, SHALL BE RE-WORKED TO KEEP THOSE ITEMS OPERATIONAL.
2. AREAS AND SERVICES ADJACENT TO DEMOLITION AREAS SHALL BE PROTECTED FROM THE DEMOLITION PROCESS. PROTECTIVE MEASURES SHALL BE THE RESPONSIBILITY OF THE ELECTRICAL CONTRACTOR FOR ALL ELECTRICAL WORK AND SHALL BE MAINTAINED CONTINUOUSLY UNTIL DEMOLITION IS COMPLETED.
3. ALL DEMOLITION AND MATERIAL REMOVAL OPERATIONS SHALL BE CAREFULLY AND SAFELY CARRIED OUT. ELECTRICAL CONTRACTOR SHALL BE TOTALLY RESPONSIBLE FOR HIS SAFE PRACTICES AND OPERATIONS.
4. PROTECTIVE MEASURES SHALL BE TAKEN DURING DEMOLITION TO KEEP THE INTERIOR OF THE REMAINING BUILDING WEATHERTIGHT. ANY OPENINGS IN THE BUILDING SHELL RESULTING FROM THE DEMOLITION PROCESS SHALL BE PROMPTLY SEALED.
5. ALL ELECTRICAL, EQUIPMENT, OUTLETS, SWITCHES, ETC., AND OTHER SALVAGEABLE MATERIAL NOT OTHERWISE SPECIFIED SHALL BECOME THE PROPERTY OF THE ELECTRICAL CONTRACTOR.
6. MATERIAL OF NO SALVAGEABLE VALUE INCLUDING CONDUIT, WIRE AND TRASH RESULTING FROM THE DEMOLITION WORK SHALL BE REMOVED BY THE ELECTRICAL CONTRACTOR PROMPTLY FROM THE JOB SITE AND PROPERLY DISPOSED OF IN A LEGAL MANNER. NO BURNING SHALL BE PERMITTED ON THE SITE.
7. IT SHALL BE THE ELECTRICAL CONTRACTOR'S RESPONSIBILITY TO CONDUCT ALL DEMOLITION IN ACCORDANCE WITH OSHA, EPA, AND ALL OTHER APPLICABLE CODES AND REGULATIONS FOR TYPE OF WORK.
8. IT SHALL BE THE ELECTRICAL CONTRACTOR'S RESPONSIBILITY TO LOCATE ALL EXISTING UTILITIES IN WORK AREA PRIOR TO INITIATION OF DEMOLITION ACTIVITIES.
9. DISCONNECT ALL WIRING AT THE POINT OF ORIGIN. ALL CONDUIT, WIRE, FITTINGS, BOXES, ETC. SHALL BE COMPLETELY REMOVED.
10. ANY ITEM INTENDED TO BE REMOVED BUT NOT SHOWN SHALL BE VERIFIED AND REMOVED BY THE ELECTRICAL CONTRACTOR AT NO ADDITIONAL COST.
11. DEMOLITION DRAWINGS OF ALL DISCIPLINES MUST BE CHECKED AND ALL ASSOCIATED ELECTRICAL DEVICES OF EQUIPMENT REMOVED BY OTHERS MUST BE REMOVED.
12. PATCH AND CAULK ALL WALLS, CEILING OR FLOOR OPENINGS AS REQUIRED.
13. ALL EXISTING CONDUITS PENETRATING FLOORS OR WALLS NOT REQUIRED TO BE REMOVED AND ALL NEW CONDUITS SHALL BE SEALED WITH FIRESTOPPING SEALANT.
14. SHIFT AND REROUTE (IF REQUIRED) ANY EXISTING CONDUIT WHICH MAY INTERFERE WITH NEW CONSTRUCTION. ALL DEVICES REMAINING MUST BE LEFT IN A CLEAN AND OPERATING CONDITION.
15. ALL BELOW SLAB CONDUIT BEING ABANDONED SHALL BE CUT FLUSH WITH FLOOR AFTER CONDUCTOR REMOVAL AND GROUTED FLUSH WITH FINISHED FLOOR.
16. ALL DEMOLITION WORK SHALL BE PERFORMED IN AN ORDERLY FASHION WITHOUT ANY DAMAGE TO EXISTING STRUCTURE AND SYSTEMS.
17. COORDINATE ELECTRICAL WORK WITH OTHER TRADES AS AND WHEN REQUIRED.
18. TEMPORARY LIGHTING SHALL BE BY ELECTRICAL CONTRACTOR. COORDINATE ALL TEMPORARY ELECTRICAL SERVICES WITH OWNER'S SITE REPRESENTATIVE.
19. THE EC SHALL FURNISH AND INSTALL ADDITIONAL CONDUIT AND WIRE AS REQUIRED AND EXTEND EXISTING CIRCUITING TO FIXTURES AND DEVICES WHICH REMAIN BUT WHICH MAY BE AFFECTED BY EXISTING FIXTURES AND DEVICES BEING REMOVED AND/OR RELOCATED. FULL EXTENT OF WORK REQUIRED SHALL BE FIELD VERIFIED.

GENERAL ELECTRICAL NOTES:

1. THE CONTRACTOR SHALL VISIT THE SITE OF THE WORK TO FAMILIARIZE HIMSELF WITH THE EXISTING CONDITIONS AND HIS PROPOSAL SHALL INCLUDE ALL CONTINGENCIES NECESSARY FOR THE COMPLETION OF HIS WORK REGARDING SUCH EXISTING CONDITIONS.
2. THERE SHALL BE NO SUBSTITUTIONS UNLESS THE CONTRACTOR HAS OBTAINED WRITTEN APPROVAL FROM THE OWNER AFTER HAVING SUBMITTED AN ALTERNATIVE PROPOSAL COMPLETE WITH A DESCRIPTION OF DEVIATION FROM THE SPECIFICATIONS AND A STATEMENT OF BENEFITS TO BE DERIVED SHOULD SUCH A PROPOSED SUBSTITUTE BE ACCEPTED BEFORE BIDDING.
3. ALL WORK SHALL BE INSTALLED IN ACCORDANCE WITH THE LATEST NATIONAL ELECTRICAL CODE, OSHA REQUIREMENTS, AND LOCAL REQUIREMENTS, ALL AS INTERPRETED BY THOSE HAVING JURISDICTION.
4. BEFORE DOING ANY WORK WHICH MIGHT ENTAIL A FULL OR PARTIAL SHUTDOWN, THE ELECTRICAL CONTRACTOR SHALL INFORM THE OWNER SO THAT A SCHEDULED SHUTDOWN ARRANGEMENT CAN BE MADE, TAKING EVERY PRECAUTION THAT THE ELECTRICAL SYSTEM IS OPERATING SATISFACTORILY.
5. THE ELECTRICAL DRAWINGS ARE DIAGRAMMATIC AND ARE INTENDED TO SHOW THE APPROXIMATE LOCATIONS OF OUTLETS, CONDUIT, JUNCTION BOXES AND EQUIPMENT. DIMENSIONS PRESENTED ON THE DRAWINGS SHALL TAKE PRECEDENCE OVER SCALED DIMENSIONS AND ALL DIMENSIONS, WHETHER SHOWN ON THE DRAWINGS OR SCALED, SHALL BE VERIFIED IN THE FIELD.
6. THE OWNER SHALL SECURE ALL PERMITS AND PAY ALL FEES THAT ARE REQUIRED BY THE APPLICABLE LOCAL AND STATE LAWS. CONFIRM WITH OWNER.
7. A CONTINUOUS CONDUIT SHALL NOT BE CONSTRUED TO SATISFY THE REQUIREMENTS FOR A GROUNDING SYSTEM. A SEPARATE GROUND WIRE SHALL BE PROVIDED INTERCONNECTING ALL EXPOSED CONDUCTIVE EQUIPMENT, TO THE COMMON GROUND BUS USING APPROPRIATE GROUND FITTINGS. GROUNDING CONDUCTORS SHALL BE SIZED IN ACCORDANCE WITH NEC TABLE 250-122. THE GROUNDING CONDUCTOR MUST BE RUN WITHIN THE CONDUCTOR RACEWAY TOGETHER WITH THE SUPPLY CONDUCTOR.
8. MULTIPLE ELECTRICAL INSPECTIONS WILL BE REQUIRED THROUGHOUT CONSTRUCTION TO INSPECT EQUIPOTENTIAL BONDING GRID.
9. "FLAT" METAL WIREWAY, ELECTRICAL METALLIC TUBING OR GALVANIZED INTERMEDIATE METALLIC CONDUIT MAY BE USED WHERE PERMITTED, UNLESS OTHERWISE NOTED ON THE DRAWINGS. RIGID GALVANIZED STEEL CONDUIT SHALL BE USED FOR ALL FEEDERS IN THE FOLLOWING LOCATIONS: MECHANICAL ROOMS, ELECTRICAL ROOMS, ELEVATOR EQUIPMENT ROOMS AND SHAFTS, OUTSIDE. PVC CONDUIT SHALL BE USED FOR ALL UNDERGROUND FEEDERS. ALL WIRING TO BE IN CONDUIT. FLEXIBLE METAL CONDUIT IS PERMITTED WITHIN WALLS OR TO FIXTURES. MAXIMUM LENGTH SHALL NOT EXCEED 6'-0".
10. CONDUIT FITTINGS, DEVICE ENCLOSURES AND ASSOCIATED ACCESSORIES SHALL BE OF CROUSE HINDS OR APPLETON MANUFACTURE.
11. WIRE SHALL BE COPPER TYPE THHN, 75 DEGREES C, STRANDED.
12. SWITCHES, SINGLE POLE, SHALL BE 20 AMP, 120/277 VOLT, SPECIFICATION GRADE, SIDE AND BACKWIRED, WITH COLORED HANDLES AS DESIGNATED BY OWNER.
13. COLOR OF COVER PLATES FOR FLUSH MOUNTED SWITCHES AND RECEPTACLES SHALL BE SMOOTH STAINLESS STEEL OR AS DESIGNATED BY OWNER.
14. LIGHTING FIXTURES SHALL BE AS INDICATED.
15. INSTALL PULL BOXES, JUNCTION BOXES, SPLICE BOXES AND FITTINGS WHERE SHOWN AND AT OTHER LOCATIONS AS NECESSARY. ALL BOXES SHALL BE GALVANIZED AND SHALL HAVE SCREW COVERS. ALL FITTINGS SHALL BE CAST MALLEABLE TYPE.
16. IDENTIFY WITH LEGIBLE AND DURABLE MARKING, EACH DISCONNECTING MEANS INDICATING ITS PURPOSE.
17. ALL 120 VOLT, SINGLE PHASE 15 AND 20 AMPERE RECEPTACLE OUTLETS USED BY THE WORKMEN SHALL BE PROTECTED BY A "GROUND FAULT INTERRUPTER".
18. ALL RECEPTACLES, SWITCHES AND DEVICES SHALL SHALL HAVE PANEL AND CIRCUIT NUMBER IDENTIFY WITH LEGIBLE AND DURABLE MARKING ON COVER PLATE. OWNER WILL INDICATE IF MARKINGS ARE ON THE FRONT OR BACK OF COVER.
19. ALL LABOR AND MATERIAL FURNISHED BY THE CONTRACTOR AS PART OF THIS CONTRACT SHALL BE GUARANTEED FOR A PERIOD OF ONE YEAR FROM DATE OF ACCEPTANCE BY THE OWNER. ANY DEFECTS WHICH APPEAR WITHIN THE GUARANTEE PERIOD SHALL BE PROMPTLY REPAIRED OR REPLACED AT THE OWNER'S DISCRETION, WITHOUT ADDITIONAL COST TO THE OWNER.
20. ALL EQUIPMENT GROUNDS SHALL BE TERMINATED WITH COMPRESSION FITTINGS AND STAINLESS STEEL BOLTS OR IN PANEL GROUND BAR.
21. BEFORE DRILLING ANY HOLES IN WALLS OR FLOORS THE AREA MUST BE CHECK FOR EXISTING EMBEDDED CONDUITS AND WIRE. THE CONCRETE FLOOR SHALL BE X-RAYED PRIOR TO SW-CUTTING. IF ANY EXISTING CONDUITS OR WIRING ARE DAMAGED BY THIS CONTRACTOR IT IS THIS CONTRACTORS RESPONSIBILITY TO MAKE ALL REPAIRS TO CONDUITS, WIRE, FLOORS AND BUILDING FINISHES IN KIND AT NO COST TO OWNER.
22. THE BIDDERS ARE REQUIRED TO VISIT THE BUILDING FOR THIS CONTRACT AND VERIFY THE EXISTING SYSTEMS. THE BIDDER WILL BE REQUIRED TO INCLUDE CODE COMPLIANT FIRE ALARM EQUIPMENT TO INTERFACE ANY EXISTING SYSTEM.

OSPORTS
OSBORN SPORTS + RECREATION ARCHITECTURE
1100 Superior Avenue - Suite 300 | Cleveland, OH 44114
990 West Third Avenue - Suite 200 | Columbus, OH 43212
(614) 556-4272 www.osborn-eng.com

OSBORN ENGINEERING
1100 Superior Avenue - Suite 300 | Cleveland, OH 44114
990 West Third Avenue - Suite 200 | Columbus, OH 43212
(614) 556-4272 www.osborn-eng.com

RECREATION CENTER POOL RENOVATIONS

CITY OF DUBLIN COMMUNITY RECREATION CENTER

5600 POST ROAD

DUBLIN, OHIO 43017
(614) 410-4550

TAG	ISSUED	DATE
A	PERMIT	04.05.16
B	ISSUED FOR BID	04.19.16

Unless otherwise stated in Contract, The Osborn Engineering Company retains copyright ownership. Instruments of Service may only be used for the purpose described in the Contract. The Osborn Engineering Company may grant specific usage rights under license, and / or may transfer copyright ownership / assignment in writing. Reproduction, re-use or re-distribution of Instruments of Service is prohibited.

DRAWN BY KCK
CHECKED BY SMJ
CLIENT PROJ. NO. 16-002.0-FAC
OSBORN PROJ. NO. J20150324.000

ELECTRICAL LEGEND AND NOTES

DRAWING NO.

E-001

P:\Dublin - City OfJ20150324.000 Rec Center Pool Repairs\Drawings\Elect\J20150324.000-E001.dwg
4/18/2016 3:08 PM Yoakum, Robert

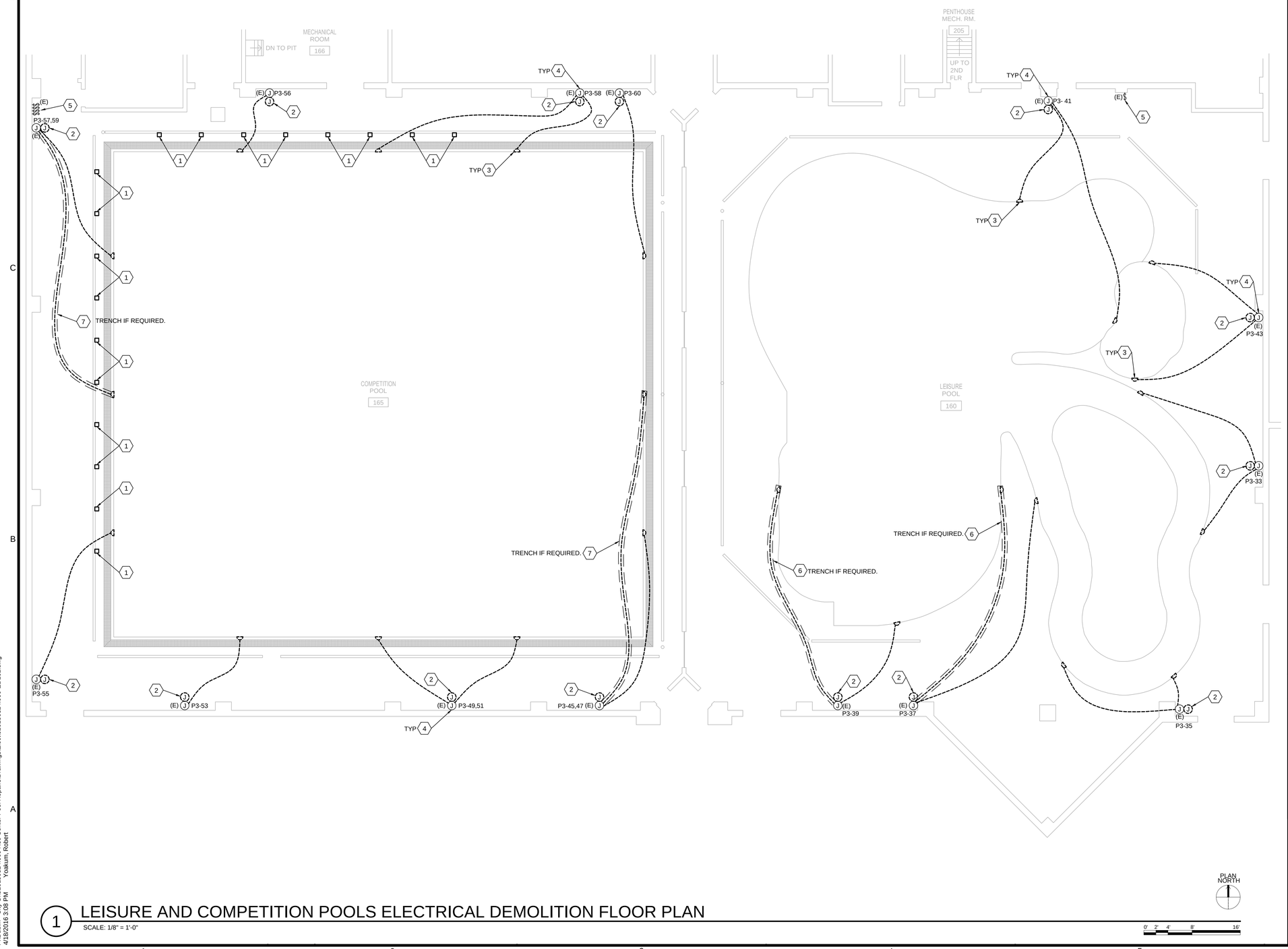

1 LEISURE AND COMPETITION POOLS ELECTRICAL DEMOLITION FLOOR PLAN

SCALE: 1/8" = 1'-0"

GENERAL NOTES

1. REFER TO ELECTRICAL SYMBOL LEGEND AND GENERAL DEMOLITION NOTES ON DWG. E-001.
2. FOR ANY WIRES THAT REMAIN IN JUNCTION BOXES DESIGNATED FOR FUTURE USE, LABEL THE SOURCE AND CAP WIRES.
3. IN AREAS OF DEMOLITION WHERE EXISTING BRANCH CIRCUITS ARE TO BE RE-USED FOR NEW WORK, CAP ALL DISCONNECTED ELECTRICAL CIRCUITRY IN JUNCTION BOXES WHERE ACCESSIBLE FOR EXTENSION TO NEW DEVICES AND EQUIPMENT.

SHEET KEYNOTES

1. DISCONNECT AND REMOVE EXISTING JUNCTION BOX ALONG WITH ALL ASSOCIATED LOW VOLTAGE WIRE BACK JUNCTION BOX IN PERIMETER WALL DEVICE, FILL CONDUIT WITH CEMENT LEVEL WITH FINISHED FLOOR. COORDINATE WORK WITH ALL TRADES,FOR PROPER TIMING WITH SLAB WORK FOR TRENCH DRAIN INSTALLATION. REPLACE EXISTING FACEPLATE ON 2"X4" JUNCTION BOX IN PERIMETER WALL WITH NEW STAINLESS STEEL FACEPLATE.
2. REMOVE EXISTING 2X4 JUNCTION BOX AND EXTENSION IN PERIMETER AS REQUIRED TO ACCESS EXISTING 4X4 JUNCTION BOX (BACK-BOX). REMOVE EXISTING 'SJ' CABLE TO EXISTING WALL MOUNTED POOL LIGHTS. MAINTAIN EXISTING WIRE BACK TO ELECTRICAL PANEL 'P3' FOR RECONNECTION TO NEW POOL LIGHTS.
3. DISCONNECT AND REMOVE EXISTING WALL MOUNTED POOL LIGHTS ALONG WITH NICHE AND ALL ASSOCIATED RATED 'SJ' ELEC CABLE AND GROUND WIRE BACK TO, 4X4 JUNCTION BOX (BACK-BOX) IN PERIMETER WALL.
4. EXISTING 4X4 JUNCTION BOX RECESSED 6" INTO WALL TO REMAIN. MAINTAIN EXISTING WIRES THROUGH LIGHTING SWITCH BANK TO PANEL.
5. EXISTING LIGHT SWITCHES TO REMAIN.
6. INCLUDE COST PER FOOT TO TRENCH LONG RUNS IF CABLE BREAKS DURING DEMOLITION AND CAN NOT BE USED TO PULL THROUGH NEW SWO LIGHT FIXTURE CABLE. X-RAY FLOOR PRIOR TO TRENCHING. WHERE APPLICABLE EXISTING FLOORING IN LEISURE POOL SHALL BE TAKEN UP AND STORED FOR FINAL RE-INSTALLATION. CONCRETE TO BE PATCHED FLUSH WITH SUB FLOOR. X-RAY FLOOR PRIOR TO TRENCHING.
7. INCLUDE COST PER FOOT TO TRENCH LONG RUNS IF CABLE BREAKS DURING DEMOLITION AND CAN NOT BE USED TO PULL THROUGH NEW SWO LIGHT FIXTURE CABLE. X-RAY FLOOR PRIOR TO TRENCHING. CONCRETE SHALL BE PATCHED FLUSH WITH EXISTING FINISHED FLOOR.

KEY PLAN

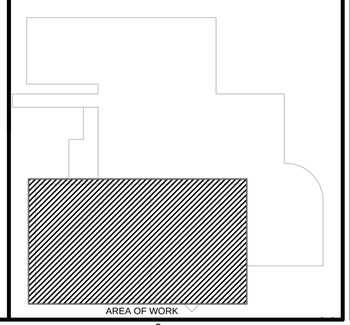

OSPORTS
OSBORN SPORTS + RECREATION ARCHITECTURE
1100 Superior Avenue - Suite 300 | Cleveland, OH 44114
990 West Third Avenue - Suite 200 | Columbus, OH 43212
(614) 556-4272 www.osborn-eng.com

OSBORN ENGINEERING
1100 Superior Avenue - Suite 300 | Cleveland, OH 44114
990 West Third Avenue - Suite 200 | Columbus, OH 43212
(614) 556-4272 www.osborn-eng.com

RECREATION CENTER POOL RENOVATIONS

CITY OF DUBLIN COMMUNITY RECREATION CENTER

5600 POST ROAD

DUBLIN, OHIO 43017
(614) 410-4550

TAG	ISSUED	DATE
A	PERMIT	04.05.16
B	ISSUED FOR BID	04.19.16

Unless otherwise stated in Contract, The Osborn Engineering Company retains copyright ownership. Instruments of Service may only be used for the purpose described in the Contract. The Osborn Engineering Company may grant specific usage rights under license, and / or may transfer copyright ownership / assignment in writing. Reproduction, re-use or re-distribution of Instruments of Service is prohibited.

DRAWN BY KCK
CHECKED BY SMJ
CLIENT PROJ. NO. 16-002.0-FAC
OSBORN PROJ. NO. J20150324.000

ELECTRICAL DEMOLITION PLAN

DRAWING NO.

ED-101

P:\Dublin - City Of\J20150324.000 Rec Center Pool Repairs\Drawings\Elect\J20150324.000-ED101.dwg
4/18/2016 3:08 PM Yoakum, Robert

ELECTRICAL LIGHTING FIXTURE SCHEDULE

TYPE	SYMBOL	DESCRIPTION	VOLTAGE	LAMPING	FIXTURE WATTS	MANUFACTURER	SERIES	REMARKS
W1		RECESSED WET NICHE LED SIZE: 11-1/4" DIAMETER MOUNTING: RECESSED	120V,	LED	96 W	HYDREL	4426-SS-36LED-WHT41K 120-NSP-CLS-NM-CSL100	RECESSED, STAINLESS STEEL, WET NICHE, COOL WHITE LED WITH INTEGRAL CONSTANT CURRENT DRIVER. NARROW SPOT, WITH 100' WATER RESISTANT FLEXIBLE POWER CABLE (SOW). UL LISTED

LUMINAIRE SCHEDULE NOTES:

1. CONTRACTOR MAY SUBMIT ALTERNATE BY EATON, COLUMBIA, OR APPROVED EQUAL.
2. FINAL FINISH SELECTION BY OWNER AT FIXTURE SUBMITTAL.

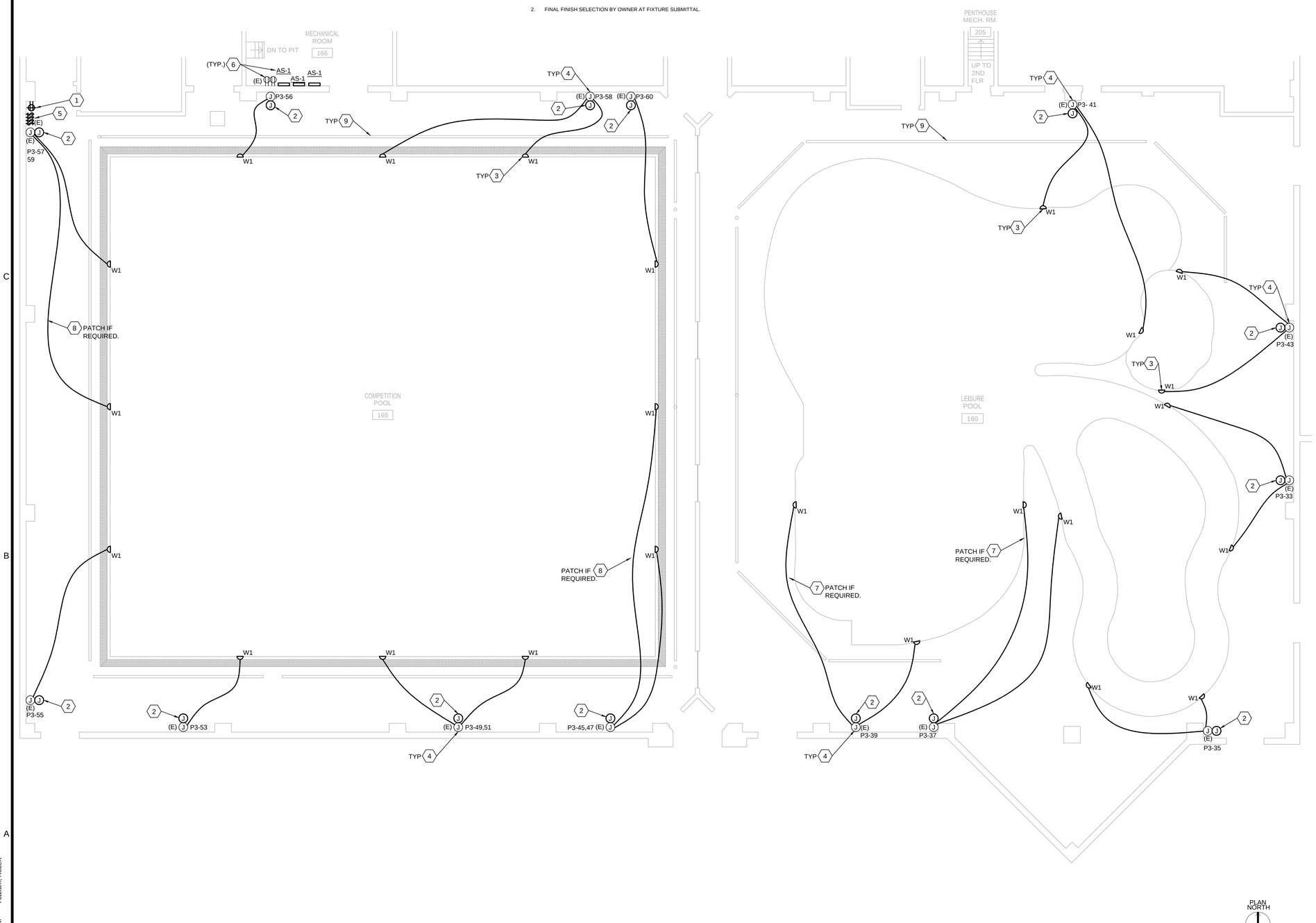

1 LEISURE AND COMPETITION POOLS ELECTRICAL FLOOR PLAN

SCALE: 1/8" = 1'-0"

GENERAL NOTES

1. REFER TO THE ELECTRICAL SYMBOL LEGEND AND NOTES, DWG. E-[insert dwg no.]; ELECTRICAL SPECIFICATIONS, DWG'S E-001; LUMINAIRE SCHEDULE,ON THIS SHEET; ELECTRICAL DETAILS, DWG. E-501; ELECTRICAL ONE LINE DIAGRAM, DWG. E-601; AND ELECTRICAL SCHEDULES, DWG. E-[insert dwg no.] FOR INSTALLATION DETAILS, FEEDER AND CONDUIT SIZES, ETC.
2. ALL CIRCUITS SHALL BE RUN WITH INDIVIDUAL NEUTRAL WIRE. CIRCUITS SHALL NOT SHARE NEUTRAL WIRES.
3. ALL CIRCUITS SHALL BE #12 WIRE UNLESS OTHERWISE INDICATED.
4. USE 2 #12, #12 EG-3/4"C. TO FEED LIGHTING FROM PANEL AND CIRCUIT NUMBER AS INDICATED UNLESS NOTED OTHERWISE.
5. PROVIDE UL LISTED FIRE STOP ASSEMBLY AT ALL NEW AND EXISTING PENETRATIONS IN FIRE RATED STRUCTURES.
6. PROVIDE UPDATED TYPED PANEL SCHEDULES IN EXISTING PANELS AFFECTED BY SCOPE OF WORK AFTER WORK IS COMPLETE.
7. THIS DRAWING IS GENERALLY DIAGRAMMATIC AND IS INTENDED TO CONVEY THE SCOPE OF WORK AND INDICATE GENERAL ARRANGEMENT OF LIGHTING FIXTURES, DEVICES, CONTROLS, ETC. THE LOCATIONS OF ALL ITEMS SHOWN ON THIS DRAWING OR CALLED FOR IN THE SPECIFICATIONS THAT ARE NOT DEFINITELY FIXED BY DIMENSIONS ARE APPROXIMATE. THE EXACT LOCATION NECESSARY TO SECURE THE BEST CONDITIONS AND RESULTS MUST BE DETERMINED AT THE PROJECT. ALL LOCATIONS OF WORK EXPOSED TO VIEW ARE SUBJECT TO APPROVAL OF THE ENGINEER PRIOR TO INSTALLATION.

SHEET KEYNOTES

1. FURNISH AND INSTALL NEW GFI RECEPTACLE. IN RECESSED DAMP LOCATION JUNCTION BOX. RELOCATED EXISTING WIRING TO MAGNETIC DOOR OPENER. MATCH EXISTING CONDUIT AND WIRE SIZE AND TYPE. REUSE EXISTING CIRCUIT TO ELECTRICAL PANEL
2. INSTALL NEW 6X6 JUNCTION BOX AND EXTENSION TO MAINTAIN ADEQUATE WORKING ACCESS PROVIDE STAINLESS STEEL COVER PLATE. ALL DAMAGED WALL TILE SHALL REPLACED TO MATCH EXISTING TILE WALL FINISH.
3. FURNISH AND INSTALL WET NICHE LIGHT FIXTURE. MODIFY EXISTING CONCRETE AND REPAIR TO ENSURE WATER TYPE GAPS ARE MAINTAINED. REPAIR OF CONCRETE OR MOTOR FINISH SHALL BE PERFORMED BY EXPERIENCED POOL CONCRETE CONTRACTOR AT ELECTRICAL CONTRACTOR'S EXPENSE. CUT WATER RESISTANT ELECTRIC CABLE SUPPLIED WITH LIGHT FIXTURE TO LENGTH. WITH 10' CABLE COILED IN FIXTURE TO ALLOW TO SET ON FLOOR OF POOL WHEN REMOVED FOR MAINTENANCE. PULL CABLE AND #8 INSULATED GROUND WIRE THROUGH EXISTING 1" CONDUIT TO EXISTING 4X4 JUNCTION BOX IN PERIMETER WALL AND EXISTING CIRCUIT IN PANEL 'P3'. REFER TO DETAIL 1/E501.
4. EXISTING 4X4 JUNCTION BOX RECESSED 6" INTO WALL TO REMAIN. ENSURE BOX IS GROUNDED TO PANEL GROUND AND UPDATE AS REQUIRED BY NEC680.24(F). VERIFY EXISTING 120V WIRING TO PANEL IS IN GOOD CONDITION PRIOR TO RE-USE.
5. EXISTING LIGHT SWITCHES TO REMAIN.
6. EXISTING QUAD RECEPTACLE IN MECHANICAL ROOM FOR ELECTRONIC WATER FILL SENSORS. NEW SENSORS SUPPLIED BY PLUMBING CONTRACTOR AT 220V WITH FACTORY MOUNTED TRANSFORMER. ELECTRICAL CONTRACTOR TO FURNISH AND INSTALL DUPLEX CORD AND PLUG AND FIELD MODIFY FOR 110V AS DIRECTED BY PRODUCT INSTALLATION AND OPERATION MANUAL.
7. WHERE TRENCH WAS REQUIRED, PATCH INFILL CONCRETE SLAB FLUSH WITH EXISTING CONCRETE SLAB AND RE-INSTALL EXISTING PADDED FLOOR TILE. REPLACE FLOOR TILE DAMAGED IN EXCAVATION WITH NEW TILE. REPAIR MESH GRID AND OR REBAR BONDING SYSTEM BETWEEN EXISTING POOL SLAB AND NEW INFILL SLAB. REFER TO DETAIL 2/E501.
8. WHERE TRENCH WAS REQUIRED, PATCH INFILL CONCRETE SLAB FLUSH WITH EXISTING FINISHED FLOOR. REPAIR MESH GRID AND OR REBAR BONDING SYSTEM BETWEEN EXISTING POOL SLAB AND NEW INFILL SLAB. REFER TO DETAIL 2/E501.
9. REPAIR MESH GRID AND OR REBAR BONDING SYSTEM BONDING WHERE DAMAGED DURING INSTALLATION OF TRENCH DRAINS. REFER TO DETAIL 3/E501 AND STRUCTURAL DETAILS ON SHEET S-101..

KEY PLAN

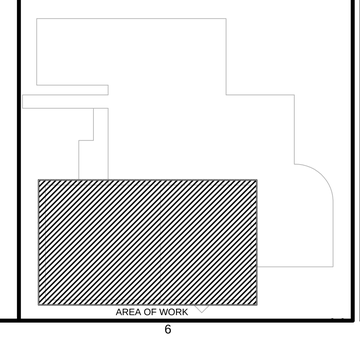

OSPORTS
OSBORN SPORTS + RECREATION ARCHITECTURE
1100 Superior Avenue - Suite 300 | Cleveland, OH 44114
990 West Third Avenue - Suite 200 | Columbus, OH 43212
(614) 556-4272 www.osborn-eng.com

OSBORN ENGINEERING
1100 Superior Avenue - Suite 300 | Cleveland, OH 44114
990 West Third Avenue - Suite 200 | Columbus, OH 43212
(614) 556-4272 www.osborn-eng.com

RECREATION CENTER POOL RENOVATIONS

CITY OF DUBLIN COMMUNITY RECREATION CENTER

5600 POST ROAD

DUBLIN, OHIO 43017
(614) 410-4550

TAG	ISSUED	DATE
A	PERMIT	04.05.16
B	ISSUED FOR BID	04.19.16

Unless otherwise stated in Contract, The Osborn Engineering Company retains copyright ownership. Instruments of Service may only be used for the purpose described in the Contract. The Osborn Engineering Company may grant specific usage rights under license, and / or may transfer copyright ownership / assignment in writing. Reproduction, re-use or re-distribution of Instruments of Service is prohibited.

DRAWN BY KCK
CHECKED BY SMJ
CLIENT PROJ. NO. 16-002.0-FAC
OSBORN PROJ. NO. J20150324.000

ELECTRICAL PLAN

DRAWING NO.

E-101

P:\Dublin - City Of\J20150324.000 Rec Center Pool Repairs\Drawings\Elect\J20150324.000-E101.dwg
4/18/2016 3:07 PM Yoakum, Robert

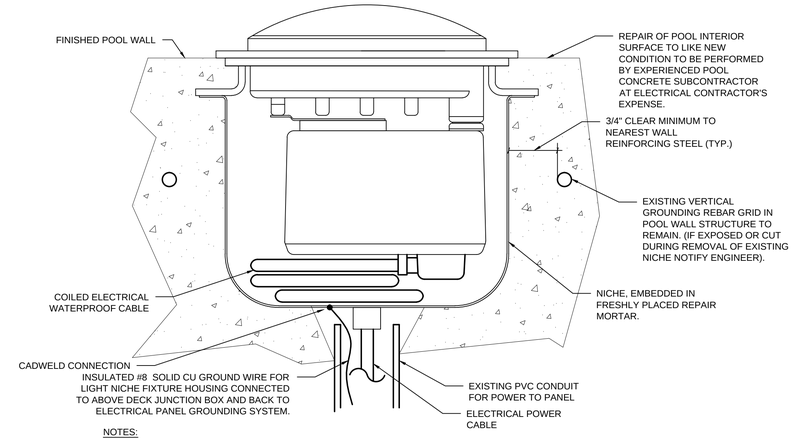

NOTES:

1. REMOVE AND REPLACE EXISTING NICHE. DEMO WALL AS REQUIRED AND REPAIR WITH LOW-CORROSION, LOW SHRINKAGE CONCRETE REPAIR MORTAR..
2. ROUTE A SEPARATE GROUNDING ELECTRODE CONDUCTOR TO EACH LIGHT FIXTURE TO GROUND THE HOUSING.
3. ALL GROUNDING ELECTRODE CONDUCTORS AND BONDING JUMPERS SHALL BE #1/0 BARE COPPER UNLESS SHOWN OTHERWISE.

1 RECESSED NICHE FIXTURE GROUNDING DETAIL

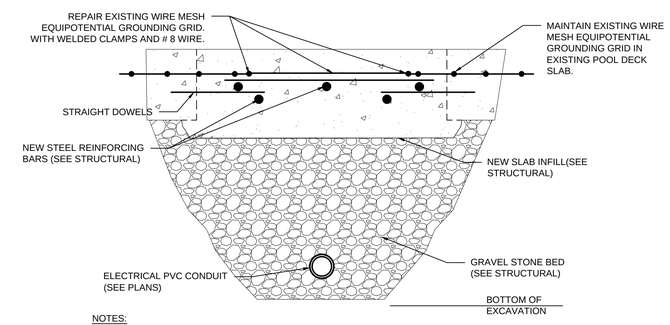

NOTES:

1. ALL CONNECTIONS TO EXISTING POOL REBAR GRID SHALL BE MADE WITH UL LISTED COPPER OR BRASS CLAMPS RATED FOR CONCRETE ENCASEMENT AND APPROVED FOR DIRECT BURY.

2 TRENCH GROUNDING DETAIL

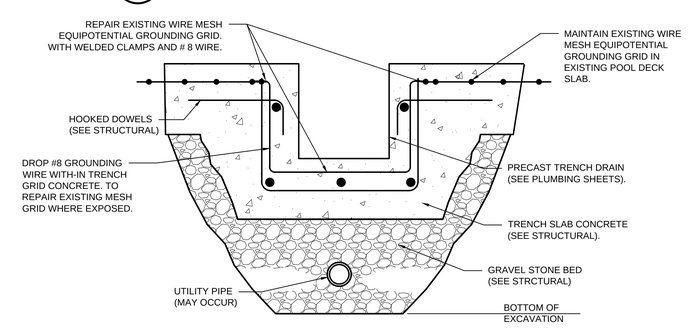

NOTES:

1. ALL CONNECTIONS TO EXISTING POOL REBAR GRID SHALL BE MADE WITH UL LISTED COPPER OR BRASS CLAMPS RATED FOR CONCRETE ENCASEMENT AND APPROVED FOR DIRECT BURY.
2. ,ROUTE A SEPARATE GROUNDING ELECTRODE CONDUCTOR TO EACH LIGHT FIXTURE TO GROUND THE HOUSING.
3. ALL GROUNDING ELECTRODE CONDUCTORS AND BONDING JUMPERS SHALL BE #1/0 BARE COPPER UNLESS SHOWN OTHERWISE.

3 TRENCH DRAIN GROUNDING DETAIL

OSPORTS
OSBORN SPORTS + RECREATION ARCHITECTURE
1100 Superior Avenue - Suite 300 | Cleveland, OH 44114
990 West Third Avenue - Suite 200 | Columbus, OH 43212
(614) 556-4272 www.osborn-eng.com

OSBORN ENGINEERING
1100 Superior Avenue - Suite 300 | Cleveland, OH 44114
990 West Third Avenue - Suite 200 | Columbus, OH 43212
(614) 556-4272 www.osborn-eng.com

RECREATION CENTER POOL RENOVATIONS

CITY OF DUBLIN COMMUNITY RECREATION CENTER

5600 POST ROAD

DUBLIN, OHIO 43017
(614) 410-4550

TAG	ISSUED	DATE
A	PERMIT	04.05.16
B	ISSUED FOR BID	04.19.16

Unless otherwise stated in Contract, The Osborn Engineering Company retains copyright ownership. Instruments of Service may only be used for the purpose described in the Contract. The Osborn Engineering Company may grant specific usage rights under license, and / or may transfer copyright ownership / assignment in writing. Reproduction, re-use or re-distribution of Instruments of Service is prohibited.

DRAWN BY KCK
CHECKED BY SMJ
CLIENT PROJ. NO. 16-002.0-FAC
OSBORN PROJ. NO. J20150324.000

ELECTRICAL DETAILS

DRAWING NO.

E-501

P:\Dublin - City Of\J20150324.000 Rec Center Pool Repairs\Drawings\Elect\J20150324.000-E501.dwg
4/19/2016 3:06 PM Yoakum, Robert

GENERAL CONDITIONS:

1. SEE SPECIFICATIONS FOR QUALITY OF CONSTRUCTION REQUIRED, WORKMANSHIP, MANUFACTURING AND INDUSTRY STANDARDS, PHYSICAL PROPERTIES OF MATERIALS, CONFORMANCE TO CODES AND REGULATIONS GUARANTEE AND WARRANTY REQUIREMENTS.

2. SEE ARCHITECTURAL, HVAC, PLUMBING, FOR OTHER PERTINENT INFORMATION RELATED TO STRUCTURAL WORK AND COORDINATE AS REQUIRED.CONTRACTOR SHALL COORDINATE STRUCTURAL DRAWINGS WITH ALL OTHER DRAWINGS WITHIN THE CONTRACT DOCUMENTS.

3. THE CONTRACTOR SHALL VERIFY ALL DIMENSIONS, ELEVATIONS AND CONDITIONS RELATED TO EXISTING CONSTRUCTION, EXISTING SERVICES, AND THE SITE BEFORE BEGINNING WORK.

4. CONSTRUCTION LOADS SHALL NOT EXCEED DESIGN LIVE LOADS. THE CONTRACTOR SHALL BE RESPONSIBLE FOR ALL DESIGN REQUIRED TO SUPPORT CONSTRUCTION EQUIPMENT USED IN CONSTRUCTING THIS PROJECT. ALL EQUIPMENT SUPPORT DESIGN SHALL BE PERFORMED BY AN ENGINEER LICENSED IN THE STATE OF THE PROJECT. SHORING AND RESHORING IS THE RESPONSIBILITY OF THE CONTRACTOR.

5. IF MATERIALS, QUANTITIES, STRENGTHS OR SIZES INDICATED BY THE DRAWINGS OR SPECIFICATIONS ARE NOT IN AGREEMENT WITH THESE NOTES, THE BETTER QUALITY AND/OR GREATER QUANTITY, STRENGTH OR SIZE INDICATED, SPECIFIED OR NOTED SHALL BE PROVIDED.

6. THE CONTRACTOR IS SOLELY RESPONSIBLE FOR THE FOLLOWING ITEMS THAT WILL NOT BE REVIEWED BY THE OWNER, ARCHITECT OR ENGINEER.

   a. DEVIATIONS FROM CONTRACT DOCUMENTS.
   b. DIMENSIONS, ELEVATIONS AND CONDITIONS TO BE CONFIRMED AND CORRELATED AT THE SITE.
   c. FABRICATION PROCESS INFORMATION.
   d. MEANS, METHODS, TECHNIQUES, PROCEDURES OF CONSTRUCTION AND CONSTRUCTION SAFETY.
   e. COORDINATION OF THE WORK OF ALL TRADES.
   f. QUALITY ASSURANCE SUBMITTALS.

7. THE EXISTING CONDITIONS INDICATED ON THE DRAWINGS ARE BASED ON EXISTING DRAWINGS BY MOODY/ NOLAN LTD., DATED 27 JANUARY 1995. THE CONTRACTOR IS SOLELY RESPONSIBLE FOR FIELD VERIFYING ALL EXISTING CONDITIONS AND DIMENSIONS. CONTRACTOR IS TO REPORT ANY DISCREPANCIES TO THE A/E PRIOR TO PROCEEDING.

8. ANY CHANGES TO THE STRUCTURAL SYSTEMS SHALL BE REDESIGNED BY A PROFESSIONAL ENGINEER AT NO COST TO THE OWNER OR THE A/E AND SUBMITTED TO THE A/E FOR REVIEW. SUBMITTAL SHALL BE ACKNOWLEDGED IN WRITING BEFORE BEGINNING CONSTRUCTION. IF CHANGES ARE MADE WITHOUT WRITTEN APPROVAL SUCH CHANGES SHALL BE THE LEGAL AND FINANCIAL RESPONSIBILITY OF THE PARTY MAKING THE CHANGE TO REPLACE OR REPAIR THE CONDITION AS DIRECTED BY THE A/E .

9. CONTRACTOR IS RESPONSIBLE TO UNCOVER AND VISUALLY FIELD VERIFY THE EXISTING CONSTRUCTION PRIOR TO THE START OF ANY WORK AFFECTING THE EXISTING STRUCTURE. CONTRACTOR IS TO REPORT ANY CHANGES OR DISCREPANCIES FROM THOSE SHOWN TO THE A/E.

EXCAVATION / DEMOLITION:

1. A SOILS REPORT HAS NOT BEEN COMPLETED FOR THIS PROJECT.

2. FOUNDATION DESIGN IS BASED ON AN ASSUMED 2000 PSF BEARING PRESSURE ON FIRM UNDISTURBED SOIL.

3. THE EXTENT OF THE WORK SHOWN SHALL INCLUDE REMOVAL AND DISPOSAL, OFF SITE, OF THE ELEMENTS INDICATED WITHIN THESE DEMOLITION DRAWINGS UNO.

4. THE EXISTING STRUCTURE SHALL BE DISASSEMBLED IN A MANNER WHICH DOES NOT DAMAGE OR DEFORM ANY EXISTING STRUCTURE TO REMAIN. EXISTING SLABS SHALL BE SAWCUT IN A MANNER WHICH DOES NOT CAUSE THE SLAB SUPPORTING MEMBER TO BE CUT OR DAMAGED.

5. CONFORM TO ALL APPLICABLE CODES FOR DEMOLITION OF STRUCTURES, SAFETY OF EXISTING AND ADJACENT STRUCTURES, DUST CONTROL, AND DISPOSAL.

6. USE OF EXPLOSIVES SHALL NOT BE PERMITTED.

7. EXISTING SLABS SHALL BE CORE DRILLED AT RE-ENTRANT CORNERS OF NEW FLOOR OPENINGS TO PREVENT OVER CUTTING.

8. THE DEMOLISHED STRUCTURE SHALL BE REDUCED TO A WEIGHT AND TRANSPORTED ACROSS THE EXISTING STRUCTURE IN A MANNER WHICH DOES NOT OVERSTRESS THE EXISTING BUILDING STRUCTURE.

9. THE CONTRACTOR SHALL BE RESPONSIBLE FOR AVOIDANCE AND CLEANUP OF STREET SPILLAGE OF EXCAVATED OR BACKFILL MATERIALS ENTERING OR LEAVING THE SITE. CLEANUP OF MAJOR SPILLS SHALL BE COMPLETED IMMEDIATELY. OTHER SPILLS SHALL BE CLEANED, AT A MINIMUM, DAILY. ALL CLEANUP SHALL BE COMPLETED TO THE FULL SATISFACTION OF THE OWNER AND CONSTRUCTION MANAGER.

10. THE CONTRACTOR SHALL PROPERLY MOISTEN SURFACES AS REQUIRED TO PREVENT SOILS FROM BECOMING AIRBORNE AND CREATING A NUISANCE TO NEIGHBORING FACILITIES, THE PUBLIC, AND ANY CONCURRENT WORK ACTIVITIES. THE FINAL DETERMINATION OF THE SUCCESS OF DUST CONTROL MEASURES SHALL BE THE OWNER AND CONSTRUCTION MANAGER.

11. ALL EXCESS EXCAVATED MATERIALS THAT ARE NOT REUSABLE SHALL BE REMOVED FROM THE SITE PROPERLY AND LEGALLY DISPOSED AT AN OFF SITE LOCATION. REFERENCE SPECIFICATIONS FOR REQUIREMENTS RELATED TO THE IDENTIFICATION OF HAZARDOUS MATERIAL IN EXCAVATIONS AND REUSE OF EXCAVATED MATERIAL FOR BACKFILL.

POST INSTALLED ANCHOR SYSTEMS

1. USE ADHESIVE ANCHOR SYSTEMS WHEN INDICATED IN DRAWINGS.

2. ADHESIVE ANCHOR SYSTEMS MUST COMPLY WITH THE LATEST REVISION OF ICC-ES ACCEPTANCE CRITERIA AC308 AND HAVE A VALID ICC-ES REPORT IN ACCORDANCE WITH THE APPLICABLE BUILDING CODE. PROVIDE THE APPLICABLE ICC-ES REPORT TO THE OWNER AND ENGINEER/ARCHITECT WHERE POST-INSTALLED ANCHOR SYSTEMS ARE TO BE USED IN LIEU OF CAST-IN ANCHORS OR THOSE OTHERWISE SPECIFIED ON THE DRAWINGS.

3. DRILLING SHALL BE PERFORMED WITH A ROTARY HAMMER DRILL AND CARBIDE TIPPED DRILL BIT IN ACCORDANCE WITH INSTRUCTIONS ACCOMPANYING ADHESIVE CARTRIDGES AND APPLICABLE ICC-ESR.

4. BORE HOLE CLEANING PROCEDURES MUST COMPLY WITH INSTRUCTIONS ACCOMPANYING THE ADHESIVE CARTRIDGE AND APPLICABLE ICC-ESR IN ORDER TO PRODUCE A DRY, DUST-FREE HOLE.

5. INJECTION OF ADHESIVE SHALL BE PERFORMED IN ACCORDANCE WITH MANUFACTURER'S INSTRUCTIONS ACCOMPANYING PRODUCT AND APPLICABLE ICC-ESR TO PRODUCE AN AIR-VOID FREE INJECTION.

6. ALTERNATE DRILLING METHODS, SUCH AS DIAMOND CORING, MUST BE APPROVED BY THE ENGINEER OF RECORD AND COMPLY WITH THE APPLICABLE ICC-ES REPORT.

7. SPECIAL CONDITIONS SUCH AS WATER SATURATED CONCRETE, WATER-FILLED HOLES, UNDERWATER AND OVERHEAD INSTALLATIONS MUST BE APPROVED BY THE ENGINEER OF RECORD AND COMPLY WITH THE APPLICABLE ICC-ES REPORT.

8. SPECIAL INSPECTION SHALL BE PROVIDED IN ACCORDANCE WITH THE ICC-ES REPORT AND AS PRESCRIBED BY THE APPLICABLE BUILDING CODE.

9. FASTENING ELEMENTS (THREADED RODS, REBAR AND INTERNALLY THREADED INSERTS) MUST BE CLEAN, DRY AND FREE OF ANY OIL OR CONTAMINANTS.

CAST-IN-PLACE CONCRETE:

1. CAST-IN-PLACE CONCRETE WORK SHALL CONFORM TO THE AMERICAN CONCRETE INSTITUTE CODES AND STANDARDS. ACI 301 "STANDARD SPECIFICATIONS FOR STRUCTURAL CONCRETE" IS HEREBY MADE A PART OF THESE DRAWINGS. ALL CONCRETE CONSTRUCTION SHALL CONFORM TO ACI 301, EXCEPT AS EXPLICITLY MODIFIED HEREIN.

2. ALL CONCRETE WORK SHALL BE IN ACCORDANCE WITH ACI 318, "THE BUILDING CODE REQUIREMENTS FOR REINFORCED CONCRETE".

3. ALL CONCRETE SHALL BE IN ACCORDANCE WITH ACI 350, "CODE REQUIREMENTS FOR ENVIRONMENTAL ENGINEERING CONCRETE STRUCTURES".

4. CONCRETE SHALL HAVE THE FOLLOWING MINIMUM COMPRESSIVE STRENGTHS AT 28 DAYS:

   a. MINIMUM COMPRESSIVE STRENGTH: 4000 PSI AT 28 DAYS.
   b. MAXIMUM WATER/CEMENT (W/C) RATIO: 0.45
   c. SLUMP LIMIT: 8 INCHES, FOR CONCRETE WITH VERIFIED SLUMP OF 2 TO 4 INCHES BEFORE ADDING HIGH-RANGE WATER-REDUCING ADMIXTURE OR PLASTICIZING ADMIXTURE, PLUS OR MINUS 1 INCH.
   d. AIR CONTENT: AIR CONTENT OF TROWEL-FINISHED FLOORS SHALL NOT EXCEED 3 PERCENT.

5. WELDED WIRE FABRIC: ASTM A82 AND A185 FOR SMOOTH STEEL WIRE.

6. REINFORCING BARS: ASTM 615, GRADE 60 (U.N.O.) WELDING OR TACK WELDING A615 BARS SHALL NOT BE PERMITTED.

7. ALL WELDED WIRE FABRIC SHALL BE CHAIRED TO ITS PROPER HEIGHT AND MAINTAINED AT THE PROPER LEVEL THROUGHOUT THE CONCRETE PLACING OPERATION. LIFTING OF WELDED WIRE FABRIC WITH A HOOK DURING CONCRETE PLACEMENT SHALL NOT BE PERMITTED.

8. REINFORCING BARS REQUIRED FOR PROPER SUPPORT OF PRINCIPAL REINFORCING SHALL BE DETAILED AND SUPPLIED BY THE CONTRACTOR WHETHER OR NOT THEY ARE INDICATED ON THE DRAWINGS. THE MINIMUM BAR SIZE SHALL BE #4 AND THE MAXIMUM SPACING SHALL BE 36" ON CENTER FOR ALL BARS THAT NEED SUPPORT. WELDED WIRE FABRIC SHALL NOT BE USED FOR THE SUPPORT OF PRINCIPAL REINFORCING.

9. PROVIDE CORROSION RESISTANT ACCESSORIES SUCH AS GRAY PLASTIC CHAIRS OR CHAIRS WITH PLASTIC COATED TIPS, IN ALL EXPOSED CONCRETE CONSTRUCTION. PRECAST CONCRETE CUBES OR SAND PLATE CHAIRS SHALL BE USED FOR THE SUPPORT OF REINFORCING ON GRADE. CONCRETE BLOCK OR CLAY MASONRY BRICK ARE NOT PERMITTED.

10. NO CONCRETE SHALL BE PLACED UNTIL THE PROPOSED CONCRETE MIX AND TEST HAVE BEEN SUBMITTED TO AND REVIEWED BY THE ARCHITECT AND AFTER THE CONTRACTOR HAS RECEIVED WRITTEN ACKNOWLEDGEMENT.

11. ALL CEMENT SHALL BE TYPE I OR TYPE III, BLENDED CEMENTS SHALL NOT BE USED.

12. CONCRETE SHALL BE DISCHARGED AT THE SITE WITHIN 1 1/2 HOURS AFTER WATER HAS BEEN ADDED TO THE CEMENT AND AGGREGATES, ADDITION OF WATER TO THE MIX AT THE PROJECT SITE WILL NOT BE PERMITTED. ALL WATER MUST BE ADDED AT THE BATCH PLANT. SLUMP MAY BE ADJUSTED ONLY THROUGH THE USE OF ADDITIONAL WATER REDUCING ADMIXTURE OR HIGH RANGE WATER REDUCING ADMIXTURE.

13. ALL CONCRETE SHALL CONTAIN A WATER REDUCING ADMIXTURE CONFORMING TO ASTM C494, TYPE A, F OR G.

14. CALCIUM CHLORIDE SHALL NOT BE PERMITTED NOR SHALL ANY ADMIXTURE CONTAINING CALCIUM CHLORIDE BE PERMITTED.

15. 3/4" CHAMFER FOR EXPOSED EDGES OF CONCRETE UNO.

16. COORDINATE ALL WORK RELATED TO OWNER-SUPPLIED EQUIPMENT OR EQUIPMENT SUPPLIED BY ANOTHER CONTRACTOR BY USING ONLY CERTIFIED EQUIPMENT DRAWINGS.

17. DETERMINE SIZE AND LOCATION OF MECHANICAL EQUIPMENT, AND MAKE PROVISIONS FOR BOLTS, SLEEVES, PADS, OPENINGS, DRAINS, ANCHOR RODS AND EMBEDDED ITEMS. THIS WORK SHALL BE COORDINATED WITH ALL TRADES INVOLVED.

18. REINFORCING BAR LAP SPLICES AND ANCHORAGE LENGTH SHALL CONFORM WITH THE 'REINFORCEMENT LAP LENGTH SCHEDULE' TABLE AS PROVIDED WITHIN THESE GENERAL NOTES.

19. TOP LAYER OF REINFORCING STEEL IN BEAMS, SLABS, JOISTS AND FOOTINGS SHALL BE CONSIDERED TOP BARS REGARDLESS OF THICKNESS OF CONCRETE BELOW THE BARS.

20. BONDBREAKER MATERIAL SHALL BE 30 POUND FELT PAPER.

21. CONCRETE FIELD QUALITY CONTROL:

   a. THE OWNER SHALL EMPLOY A TESTING LABORATORY TO TAKE AND TEST CONCRETE CYLINDERS, PERFORM SLUMP TESTS, PERFORM TESTS FOR AIR CONTENT, AND TO PERFORM STRENGTH TESTS IN ACCORDANCE WITH ASTM C39.
   b. MINIMUM OF THREE CYLINDERS SHALL BE TAKEN FOR EACH 50 CU YD OF CONCRETE OR FRACTION THEREOF FOR EACH STRENGTH AND TYPE OF CONCRETE BEING CAST THAT DAY.
   c. NO CONCRETE SHALL BE PLACED THAT DOES NOT MEET SLUMP OR AIR CONTENT REQUIREMENTS. ALL TESTS FOR AIR CONTENT SHALL BE MADE BY THE PRESSURE METHOD. SLUMP TESTS SHALL BE TAKEN AT EACH 20 CU YD OF CONCRETE BEING PLACED.
   d. SLUMP EXCEEDING THE SPECIFIED MAXIMUM, WHEN OCCURRING IN 2 CONSECUTIVE TESTS MADE ON DIFFERENT PORTIONS OF THE SAME SAMPLE, WILL BE CAUSE FOR REJECTION OF THAT TRUCKLOAD AND SHALL BE REPORTED TO THE A/E IMMEDIATELY. THE REPLACEMENT OF SUCH CONCRETE WITH THE SPECIFIED CONCRETE SHALL BE DONE AT NO ADDITIONAL EXPENSE TO THE OWNER.
   e. THE CONCRETE TEST REPORTS SHALL CONTAIN THE FOLLOWING INFORMATION: CONCRETE SUPPLIER, QUANTITY OF CONCRETE REPRESENTED, LOCATION OF ALL SAMPLES TAKEN, STRENGTH REQUIREMENT IN PSI AT 28 DAYS, LIST OF ALL MATERIALS USED (QUANTITY, AND BRAND OR SOURCE), ACTUAL SLUMP, ACTUAL AIR CONTENT PERCENT BY VOLUME, AIR TEMPERATURE, CONCRETE TEMPERATURE, WEATHER, CYLINDER WEIGHT AS RECEIVED, AIR_DRIED UNIT WEIGHT FOR LIGHTWEIGHT CONCRETE, DATE MOLDED, NUMBER OF DAYS ON JOB SITE, DATE TESTED, TEST RESULTS FOR 7 AND 28 DAYS AGE, AND ANY OTHER INFORMATION NECESSARY TO EVALUATE TESTS. TWO COPIES OF THESE REPORTS SHALL BE SENT DIRECTLY TO THE A/E OR THE OWNER.

SPECIAL INSPECTIONS

1. THE FOLLOWING ITEMS REQUIRE SPECIAL INSPECTION AND TESTING PER OBC SECTION 1704. THIS WORK SHALL BE PERFORMED BY A SPECIAL INSPECTOR CERTIFIED (BY THE GOVERNING MUNICIPALITY WHERE THE PROJECT IS LOCATED) TO PERFORM THE TYPES OF INSPECTIONS AND TESTS SPECIFIED. THE FREQUENCY OF INSPECTIONS AND TESTING SHALL BE AS OUTLINED IN THE OBC TABLE ITEMS LISTED BELOW. DEFICIENCIES SHALL BE REPORTED DAILY TO THE CONTRACTOR. SUMMARY REPORTS SHALL BE DISTRIBUTED WEEKLY TO THE OWNER, ARCHITECT, CONTRACTOR, BUILDING OFFICIAL AND STRUCTURAL ENGINEER.

2. THE CONTRACTOR SHALL PROVIDE A LIST OF SPECIAL INSPECTORS FOR THE OWNER & ENGINEER OF RECORD TO REVIEW. THE SPECIAL INSPECTOR SHALL BE EMPLOYED BY THE OWNER IN THE PERFORMANCE OF THEIR RESPECTIVE DUTIES.

ITEM	DESCRIPTION (REFER TO OBC 1704)	OBC TABLE REQUIREMENTS
CONCRETE	CONCRETE THAT IS PART OF THE STRUCTURE	TABLE 1704.4, ITEMS 4, 5, 6, 7, 9, 10
BOLTS INSTALLED IN CONCRETE	ANCHOR BOLTS, HEADED STUDS (EXCEPT AT BEAM-TO-DECK INSTALLATION)	TABLE 1704.4, ITEM 3
REINFORCING STEEL	PLACEMENT OF REINFORCING STEEL SPLICING BY BUTT WELDING, EXOTHERMIC WELDING PROCESS OR THREADED COUPLERS	TABLE 1704.4, ITEM 1
SPECIAL GRADING, EXCAVATION AND FILLING	FOUNDATION EXCAVATIONS AND BEARING STRATA BACKFILL BEHIND STRUCTURAL WALLS OR SUPPORTING SLAB ON GRADE	TABLE 1704.7
SPECIAL CASES	DRILLED-IN CONCRETE ANCHORS: PERIODIC SPECIAL INSPECTION SHALL INCLUDE VISUAL OBSERVATION OF DRILLED HOLE SPACING, EDGE DISTANCES AND TENSION TESTING OF 5% OF ANCHORS SHOWN ON STRUCTURAL DRAWINGS. LOAD TEST SHALL BE 2 TIMES THE MANUFACTURER'S ALLOWABLE LOAD OF THE ANCHOR IN TENSION.	
	EPOXY OR CEMENT GROUTED DOWELS AND ANCHORS: OBSERVE DRILLED HOLES AFTER CLEANING AND INSTALLATION OF GROUT ANDDOWELS AND ANCHORS.	

REINFORCING BAR CLEARANCE TABLE

LOCATION	CLEARANCE
CONCRETE CAST AGAINST & PERMANENTLY EXPOSED TO EARTH OR MUD SLAB	3"
COLUMNS AND PIERS (VERT REINF)	2"
COLUMN TIES	1 1/2"
WALLS INTERIOR FACE	1"
WALLS EXTERIOR FACE #5 AND SMALLER	1 1/2"
WALLS EXTERIOR FACE #6 AND LARGER	2"
CURBS	1 1/2"
SLABS ON DECK (WWF)	1"
SLABS ON GRADE (WWF)	1/3 SLAB THICKNESS FROM TOP OF SLAB

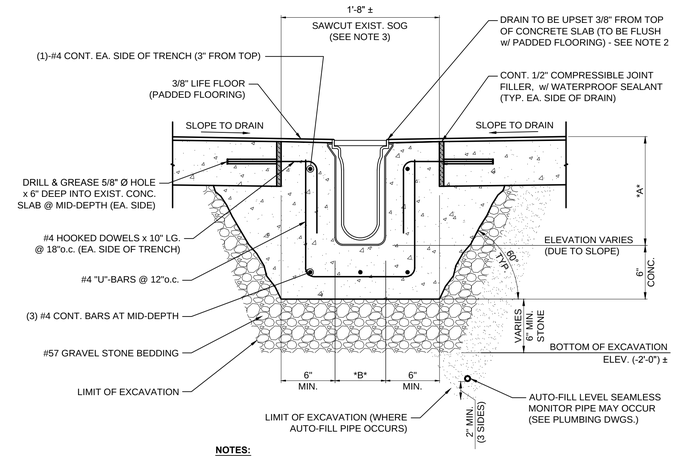

NOTES:

1. *A* or *B* = COORDINATE DIMENSIONS WITH TRENCH DRAIN FURNISHED AND INVERTS PER SLOPE REQUIRED.
2. INSTALL TRENCH DRAIN, PER MANUFACTURER'S RECOMMENDATIONS, WITHIN CONCRETE TRENCH SLAB.
3. WHEN REMOVING EXISTING SLAB FOR PROPOSED WORK, LOCATE AND PRESERVE EXIST. WIRE MESH GROUNDING GRID, AND TIE-IN NEW GROUNDING MESH PER ELECTRICAL DRAWINGS (SEE SHEET E501). REPAIR AND REPLACE/PATCH FLOOR SLAB IN KIND AS REQUIRED.
4. SEE DETAIL 2/S-101 FOR OTHER SLAB INFILL AREAS, REQUIRED AT MISC. UTILITY LINES AND CONDUITS, PER PLUMBING AND ELECTRICAL DRAWINGS.

1 TRENCH DRAIN DETAIL

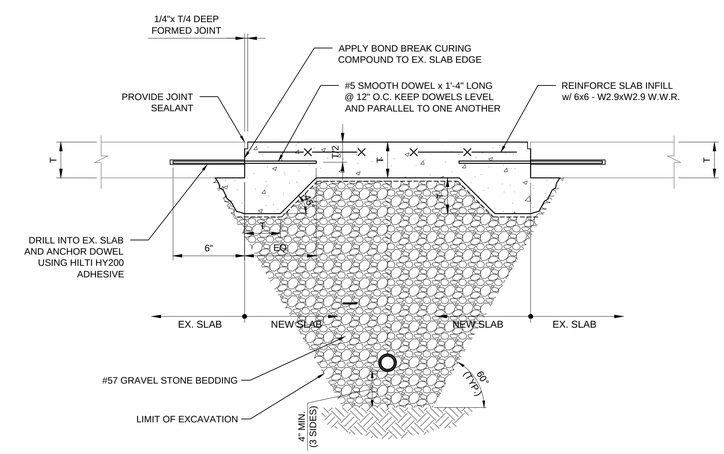

2 UTILITY TRENCH SLAB INFILL DETAIL

REINFORCING LAP LENGTH SCHEDULE

F'c = 4000 P.S.I. NORMAL WEIGHT

BAR SIZE	TOP BAR LENGTH (IN.) CATEGORY 1	2	3	4	5	6	OTHER BAR LENGTH (IN.) CATEGORY 1	2	3	4	5	6
3	18	18	18	18	18	18	16	16	16	16	16	16
4	26	24	24	24	24	24	20	19	19	19	19	19
5	40	32	30	30	30	30	31	25	23	23	23	23
6	57	45	40	36	36	36	44	35	31	28	28	28
7	77	62	54	43	42	42	59	48	42	33	33	33
8	102	81	71	57	51	48	78	63	55	44	39	37
9	129	103	90	72	64	55	99	79	69	56	50	42
10	163	131	114	92	82	65	126	101	88	70	63	50
11	200	160	140	112	100	80	154	123	108	86	77	62

CATEGORY DETERMINATION TABLE FOR SCHEDULES ABOVE

CONCRETE COVER	CENTER TO CENTER BAR SPACING ≤ 3d	> 3d < 4d	≥ 4d < 6d	≥ 6d	STRUCTURAL ELEMENTS
< d	1	3	5	6	LONGITUDINAL BARS IN BEAMS, COLUMNS, INNER LAYER OF WALLS, AND SLABS
> d, < 2d	1	3	3	4	ALL OTHER REINFORCING BARS
> 2d	1	3	5	6	ALL OTHER REINFORCING BARS

d = NOMINAL BAR DIAMETER.

OSPORTS
OSBORN SPORTS + RECREATION ARCHITECTURE
1100 Superior Avenue - Suite 300 | Cleveland, OH 44114
990 West Third Avenue - Suite 200 | Columbus, OH 43212
(614) 556-4272 www.osborn-eng.com
OSBORN ENGINEERING
1100 Superior Avenue - Suite 300 | Cleveland, OH 44114
990 West Third Avenue - Suite 200 | Columbus, OH 43212
(614) 556-4272 www.osborn-eng.com

RECREATION CENTER POOL RENOVATIONS

CITY OF DUBLIN COMMUNITY RECREATION CENTER

5600 POST ROAD

DUBLIN, OHIO 43017
(614) 410-4550

TAG	ISSUED	DATE
A	PERMIT	04.05.16
B	ISSUED FOR BID	04.19.16

Unless otherwise stated in Contract, The Osborn Engineering Company retains copyright ownership. Instruments of Service may only be used for the purpose described in the Contract. The Osborn Engineering Company may grant specific usage rights under license, and / or may transfer copyright ownership / assignment in writing. Reproduction, re-use or re-distribution of Instruments of Service is prohibited.

DRAWN BY MG
CHECKED BY MWB
CLIENT PROJ. NO. 16-002.0-FAC
OSBORN PROJ. NO. J20150324.000

STRUCTURAL SECTIONS & DETAILS

DRAWING NO.

S-101

P:\Dublin - City OH\J20150324.000 Rec Center Pool Repairs\Drawings\Struct\J20150324-000_S101.dwg
4/18/2016 3:10 PM Yoakum, Robert