BRIDGE PARK
DUBLIN, OH

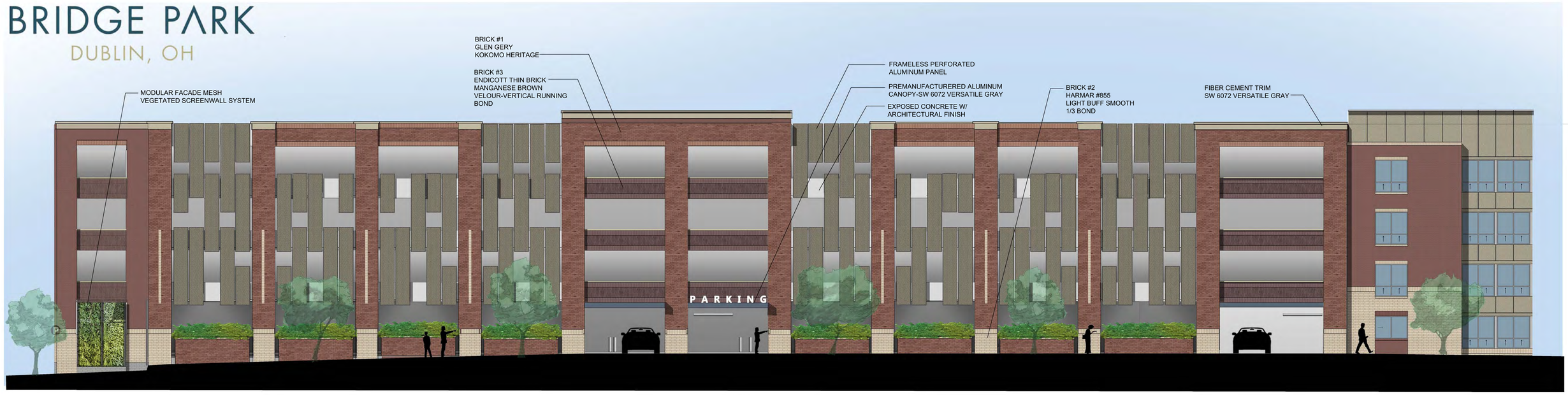

East Elevation

South Elevation

CRAWFORD HOYING
development

B5 GARAGE REDESIGN 7-27-16

AFTER

MOODY•NOLAN
RESPONSIVE ARCHITECTURE

BRIDGE PARK
DUBLIN, OH

ALL SCREWS ATTACHING ALUMINUM PANELS TO ALUMINUM ANGLES SHALL BE STAINLESS STEEL

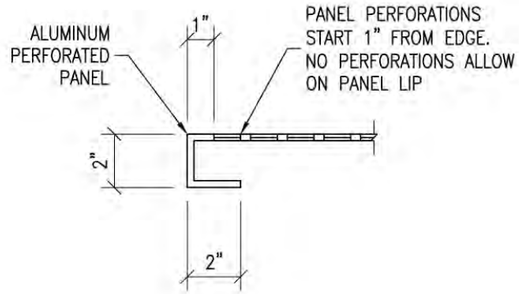

SECTION 1 / SD9
3" = 1'-0"

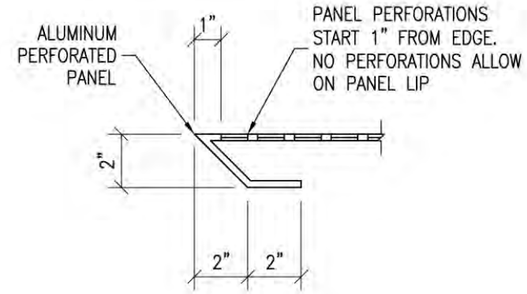

SECTION 2 / SD9
3" = 1'-0"

Panels will be a Gray tone not Brown

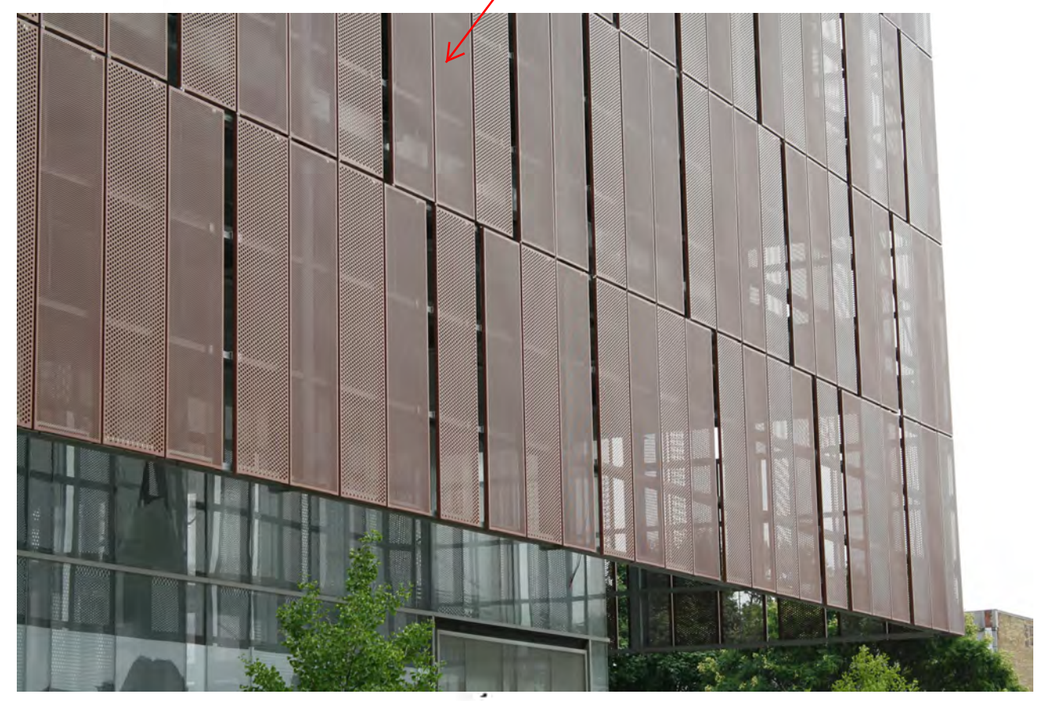

FRAMELESS PERFORATED ALUMINUM PANELS

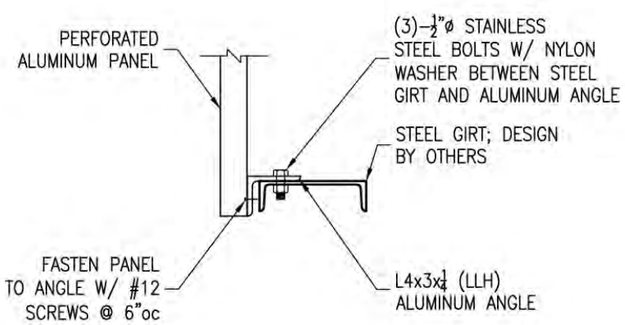

SECTION 6 / SD9
1½" = 1'-0"

KEY PLAN

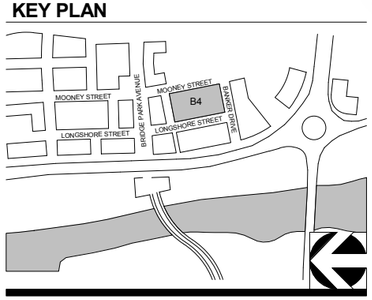

CORRIDOR BUILDING / PARKING STRUCTURE (HYBRID) TYPE

07-28-2016

11" X 17" = 1/32" = 1'-0" , 22" X 34" = 1/16" - 1'-0"

CRAWFORD HOYING development

MOODY•NOLAN
RESPONSIVE ARCHITECTURE

A123 - B5 - SCREEN