T-MOBILE NORTHEAST LLC

T-MOBILE SITE NUMBER: A6C0175B
ATC SITE NUMBER: 81738
ATC SITE NAME: OSHAUGHNESSY DAM OH
T-MOBILE L700 INSTALLATION, DESIGN 703E GDSh NO U2100

6013 GLICK ROAD
POWELL, OH 43065
DELAWARE COUNTY

Know what's below. Call before you dig.

SITE INFORMATION

SCOPE OF WORK:	PROJECT CONSISTS OF REMOVING (6) EXISTING ANTENNAS AND (6) TMAs AND INSTALLING (3) PROPOSED ANTENNAS AND (6) PROPOSED TMAs TO AN EXISTING WIRELESS TELECOMMUNICATIONS FACILITY
PROJECT DESIGN:	703E GDSh NO U2100 (AS IDENTIFIED ON RFDS)
SITE ID NUMBER:	A6C0175B
ATC SITE #:	81738
911 SITE ADDRESS:	6013 GLICK ROAD POWELL, OH 43065
TOWER OWNER:	AMERICAN TOWER CORPORATION
ADDRESS:	116 HUNTINGTON AVE. 11TH FLOOR BOSTON, MA 02116
LATITUDE (NAD 83):	40.15300000°
LONGITUDE (NAD 83):	-83.12952780°
JURISDICTION:	DELAWARE COUNTY
USE & OCCUPANCY GROUP:	U
CONSTRUCTION TYPE:	IIB
TAX ACCOUNT NUMBER:	600-432-29-001-000
PARCEL AREA:	1.00± ACRES
PARCEL OWNER:	MY BUCKET LIST, LLC
ADDRESS:	6013 GLICK ROAD POWELL, OH 43065
GROUND ELEVATION:	871.0' (AMSL)
STRUCTURE TYPE:	MONOPOLE
STRUCTURE HEIGHT:	150.0' (AGL)

PROJECT TEAM

APPLICANT:	T-MOBILE 6200 OAK TREE BLVD., SUITE #125 INDEPENDENCE, OH 44131 PHONE: 216-525-6000
PROJECT MANAGEMENT FIRM:	NETWORK BUILDING + CONSULTING, LLC. 6095 MARSHALEE DRIVE, SUITE 300 ELKRIDGE, MD 21075 (410) 712-7092
ENGINEERING FIRM:	NB+C ENGINEERING SERVICES, LLC. 6095 MARSHALEE DRIVE, SUITE 300 ELKRIDGE, MD 21075 (410) 712-7092

VICINITY MAP

DIRECTIONS

FROM: 6200 OAK TREE BLVD., SUITE #125, INDEPENDENCE, OH 44131: HEAD SOUTH ON OAK TREE BLVD S, MAKE A U-TURN ONTO OAK TREE BLVD S, TURN RIGHT ONTO ROCKSIDE RD, TURN RIGHT AND TAKE RAMP ONTO I-77 S TOWARD AKRON, TAKE EXIT 144 TOWARD COLUMBUS ONTO I-271 S, TAKE EXIT 1 TOWARD COLUMBUS ONTO I-71 S, TAKE EXIT 131 TOWARD US-36/OH-37/SUNBURY/DELAWARE, TURN RIGHT ONTO E STATE ROUTE 37 (US-36), KEEP LEFT ONTO E WILLIAM ST (US-36), TURN LEFT AND TAKE RAMP ONTO US-23 S/US-42 S, TURN RIGHT ONTO US-42, TURN LEFT ONTO DUBLIN RD (OH-745), TURN RIGHT ONTO GLICK RD, ARRIVE AT GLICK RD. YOUR DESTINATION IS ON THE LEFT.

CODE COMPLIANCE

ALL WORK AND MATERIALS SHALL BE PERFORMED AND INSTALLED IN ACCORDANCE WITH THE CURRENT EDITIONS OF THE FOLLOWING CODES AS ADOPTED BY THE LOCAL GOVERNING AUTHORITIES. NOTHING IN THESE PLANS IS TO BE CONSTRUED TO PERMIT WORK NOT CONFORMING TO THE LATEST EDITIONS OF THE FOLLOWING CODES.

- 2011 OHIO BUILDING CODE
- 2011 OHIO MECHANICAL CODE
- 2009 IECC
- 2011 OHIO FIRE CODE
- 2011 NEC
- AMERICAN CONCRETE INSTITUTE
- AMERICAN INSTITUTE OF STEEL CONSTRUCTION
- MANUAL OF STEEL CONSTRUCTION 13TH EDITION
- ANSI/TIA-222-G
- TIA 607
- INSTITUTE FOR ELECTRICAL & ELECTRONICS ENGINEER 81
- IEEE C2 NATIONAL ELECTRIC SAFETY CODE LATEST EDITION
- TELECORDIA GR-1275
- ANSI/T 311

DRAWING INDEX

T-1	TITLE SHEET
C-1	COMPOUND PLAN & ELEVATION
A-1	ANTENNA PLANS & ANTENNA SCHEDULE
A-2	ANTENNA MOUNTING DETAILS
A-3	RF PLUMBING DIAGRAM
G-1	ELECTRICAL & GROUNDING DETAILS

DO NOT SCALE DRAWINGS

THESE DRAWINGS ARE FORMATTED TO BE FULL-SIZE AT 24"X36". CONTRACTOR SHALL VERIFY ALL PLANS AND EXISTING DIMENSIONS AND CONDITIONS ON THE JOB SITE AND SHALL IMMEDIATELY NOTIFY THE DESIGNER / ENGINEER IN WRITING OF ANY DISCREPANCIES BEFORE PROCEEDING WITH THE WORK OR MATERIAL ORDERS OR BE RESPONSIBLE FOR THE SAME. CONTRACTOR SHALL USE BEST MANAGEMENT PRACTICE TO PREVENT STORM WATER POLLUTION DURING CONSTRUCTION.

RECEIVED
SEP 08 2016
16-075ARTV
CITY OF DUBLIN
PLANNING

ENGINEER

NB+C TOTALLY COMMITTED.
NB+C ENGINEERING SERVICES, LLC.
6095 MARSHALEE DRIVE, SUITE 300
ELKRIDGE, MD 21075
(410) 712-7092

APPLICANT

T-Mobile
6200 OAK TREE BLVD., SUITE #125
INDEPENDENCE, OH 44131
PHONE: 216-525-6000

MLA PARTNER

AMERICAN TOWER

SITE INFORMATION

A6C0175B
OSHAUGHNESSY DAM OH
ATC SITE # 81738
6013 GLICK ROAD
POWELL, OH 43065
DELAWARE COUNTY

DESIGN RECORD

REVISIONS

REV	DATE	DESCRIPTION	BY
0	07/12/16	FINAL	AP

PROFESSIONAL STAMP

STATE OF OHIO
PHILIP BURTNER
73386
REGISTERED
PROFESSIONAL ENGINEER

ENGINEER

PHILIP BURTNER, P.E.
OH PROFESSIONAL ENGINEER LIC. #73386

SHEET TITLE

TITLE SHEET

SHEET NUMBER

T-1

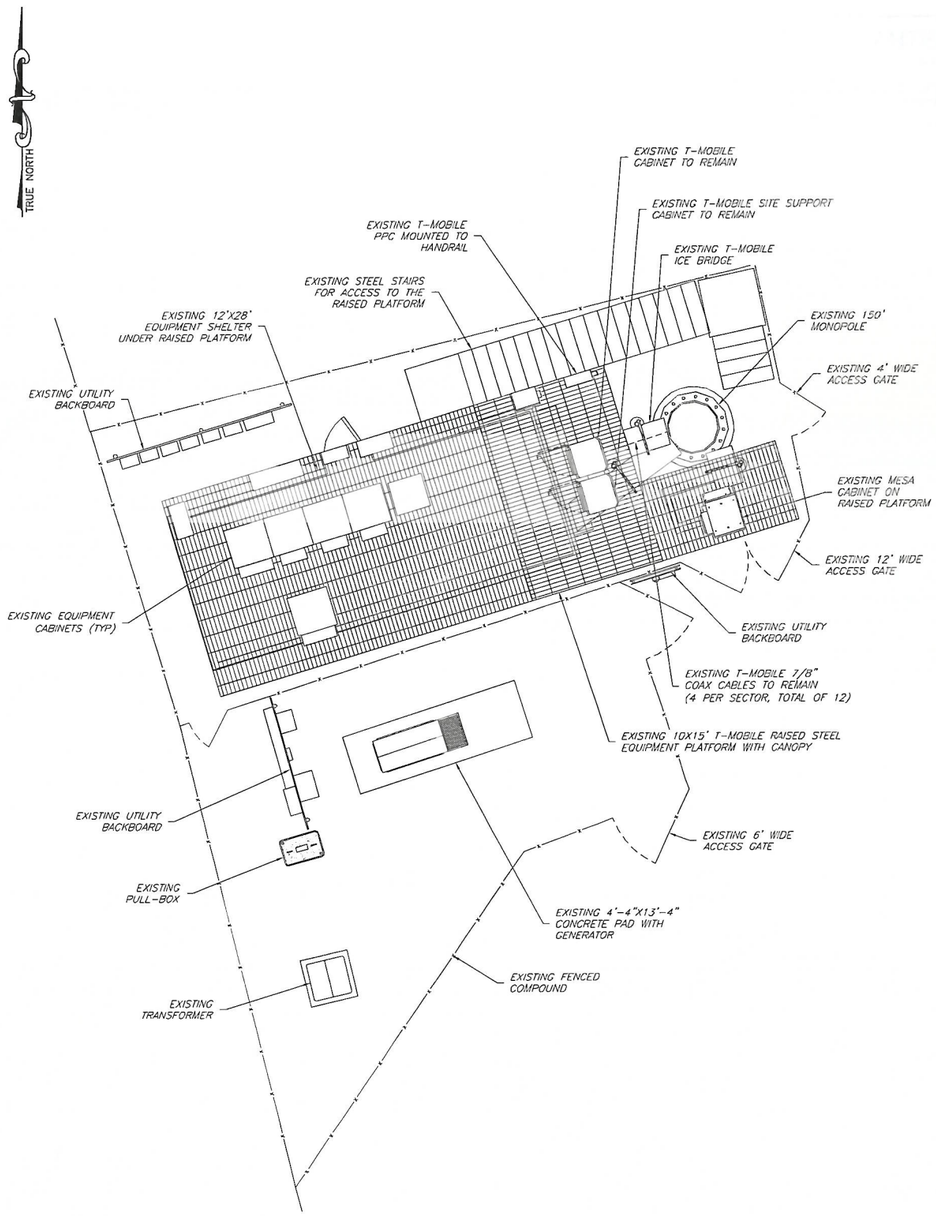

1 / C-1 COMPOUND PLAN
SCALE: 1" = 5'

GRAPHIC SCALE
5 0 2.5 5 10 20
(IN FEET)
1 INCH = 5 FEET

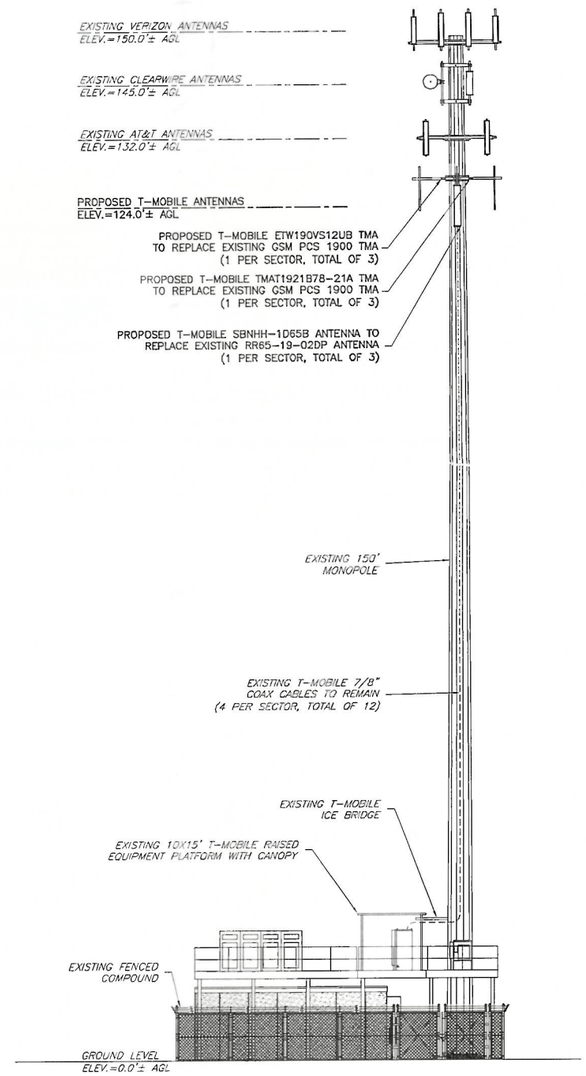

2 / C-1 ELEVATION
SCALE: 1" = 10'

GRAPHIC SCALE
10 0 5 10 20 40
(IN FEET)
1 INCH = 10 FEET

GENERAL NOTES

1. THE CONTRACTOR SHALL COMPLY WITH ALL APPLICABLE CODES ORDINANCES, LAWS AND REGULATIONS OF ALL MUNICIPALITIES, UTILITIES COMPANY OR OTHER PUBLIC AUTHORITIES.
2. THE CONTRACTOR SHALL BE RESPONSIBLE FOR OBTAINING ALL PERMITS AND INSPECTIONS THAT MAY BE REQUIRED BY ANY FEDERAL, STATE, COUNTY OR MUNICIPAL AUTHORITIES.
3. THE CONTRACTOR SHALL NOTIFY THE CONSTRUCTION MANAGER, IN WRITING, OF ANY CONFLICTS, ERRORS OR OMISSIONS PRIOR TO THE SUBMISSION OF BIDS OR PERFORMANCE OF WORK. MINOR OMISSIONS OR ERRORS IN THE BID DOCUMENTS SHALL NOT RELIEVE THE CONTRACTOR FROM RESPONSIBILITY FOR THE OVERALL INTENT OF THESE DRAWINGS.
4. THE CONTRACTOR SHALL BE RESPONSIBLE FOR PROTECTING ALL EXISTING SITE IMPROVEMENTS PRIOR TO COMMENCING CONSTRUCTION. THE CONTRACTOR SHALL REPAIR ANY DAMAGE CAUSED AS A RESULT OF CONSTRUCTION OF THIS FACILITY.
5. THE SCOPE OF WORK FOR THIS PROJECT SHALL INCLUDE PROVIDING ALL MATERIALS, EQUIPMENT AND LABOR REQUIRED TO COMPLETE THIS PROJECT. ALL EQUIPMENT SHALL BE INSTALLED IN ACCORDANCE WITH THE MANUFACTURER'S RECOMMENDATIONS.
6. THE CONTRACTOR SHALL VISIT THE PROJECT SITE PRIOR TO SUBMITTING A BID TO VERIFY THAT THE PROJECT CAN BE CONSTRUCTED IN ACCORDANCE WITH THE CONTRACT DOCUMENTS.
7. CONTRACTOR SHALL VERIFY ANTENNA ELEVATION AND AZIMUTH WITH RF ENGINEERING PRIOR TO INSTALLATION.
8. TRANSMITTER EQUIPMENT AND ANTENNAS ARE DESIGNED TO MEET ANSI/EIA/TIA 222-G REQUIREMENTS.
9. ALL STRUCTURAL ELEMENTS SHALL BE HOT DIPPED GALVANIZED STEEL.
10. CONTRACTOR SHALL MAKE A UTILITY "ONE CALL" TO LOCATE ALL UTILITIES PRIOR TO EXCAVATING.
11. IF ANY UNDERGROUND UTILITIES OR STRUCTURES EXIST BENEATH THE PROJECT AREA, CONTRACTOR MUST LOCATE IT AND CONTACT THE APPLICANT & THE OWNER'S REPRESENTATIVE.
12. OCCUPANCY IS LIMITED TO PERIODIC MAINTENANCE AND INSPECTION BY TECHNICIANS APPROXIMATELY 2 TIMES PER MONTH.
13. PROPERTY LINE INFORMATION WAS PREPARED USING DEEDS, TAX MAPS, AND PLANS OF RECORD AND SHOULD NOT BE CONSTRUED AS AN ACCURATE BOUNDARY SURVEY.
14. THIS PLAN IS SUBJECT TO ALL EASEMENTS AND RESTRICTIONS OF RECORD.
15. THE PROPOSED FACILITY WILL CAUSE ONLY A "DE MINIMIS" INCREASE IN STORMWATER RUNOFF. THEREFORE, NO DRAINAGE STRUCTURES ARE PROPOSED.
16. NO SIGNIFICANT NOISE, SMOKE, DUST, OR ODOR WILL RESULT FROM THIS FACILITY.
17. THE FACILITY IS UNMANNED AND NOT INTENDED FOR HUMAN HABITATION (NO HANDICAP ACCESS REQUIRED).
18. THE FACILITY IS UNMANNED AND DOES NOT REQUIRE POTABLE WATER OR SANITARY SERVICE.
19. POWER TO THE FACILITY WILL BE MONITORED BY A SEPARATE METER.

STRUCTURAL NOTE:
THE PE LETTER EVALUATION OF THE EXISTING MONOPOLE WITH EXISTING AND PROPOSED LOADS PERFORMED BY: AMERICAN TOWER CORPORATION, PROJECT #: OAA680015, DATED: 06/22/16

ENGINEER

NB+C™
TOTALLY COMMITTED.
NB+C ENGINEERING SERVICES, LLC.
6095 MARSHALEE DRIVE, SUITE 300
ELKRIDGE, MD 21075
(410) 712-7092

APPLICANT

T-Mobile
6200 OAK TREE BLVD., SUITE #125
INDEPENDENCE, OH 44131
PHONE: 216-525-6000

MLA PARTNER

AMERICAN TOWER

SITE INFORMATION

A6C0175B
OSHAUGHNESSY DAM OH
ATC SITE # 81738
6013 GLICK ROAD
POWELL, OH 43065
DELAWARE COUNTY

DESIGN RECORD

REVISIONS

REV	DATE	DESCRIPTION	BY
0	07/12/16	FINAL	AP

PROFESSIONAL STAMP

STATE OF OHIO
PHILIP BURTNER
73386
REGISTERED
PROFESSIONAL ENGINEER

ENGINEER

PHILIP BURTNER, P.E.
OH PROFESSIONAL ENGINEER LIC. #73386

SHEET TITLE

COMPOUND PLAN & ELEVATION

SHEET NUMBER

C-1

ANTENNA INFORMATION

SECTOR	STATUS	ANTENNA MANUFACTURER	ANTENNA MODEL	ANTENNA DIMENSIONS (HxWxD)	MECHANICAL DOWN TILT	ELECTRICAL DOWN TILT	RAD CENTER	AZIMUTH	TMA/RRU QUANTITY & MODEL	CABLE QUANTITY & TYPE	CABLE LENGTH
A1	EXISTING (TO BE REMOVED)	EMS	RR65-19-02DP	72.0"X8.0"X2.8"	0°	2°	124'	0°	(1) GSM PCS 1900 TMA (TO BE REMOVED)	(4) EXISTING 7/8" COAX CABLES	145'±
A2	PROPOSED	COMMSCOPE	SBNHH-1D65B	72.0"X11.9"X7.1"	0°	2° / 2° / 2°	124'	0°	(1) ETW190VS12UB TMA (1) TMAT1921B78-21A		
A3	EXISTING (TO BE REMOVED)	EMS	RR65-19-02DP	72.0"X8.0"X2.8"	0°	2°	124'	0°	(1) GSM PCS 1900 TMA (TO BE REMOVED)		
B1	EXISTING (TO BE REMOVED)	EMS	RR65-19-02DP	72.0"X8.0"X2.8"	0°	2°	124'	120°	(1) GSM PCS 1900 TMA (TO BE REMOVED)	(4) EXISTING 7/8" COAX CABLES	145'±
B2	PROPOSED	COMMSCOPE	SBNHH-1D65B	72.0"X11.9"X7.1"	0°	2° / 2° / 2°	124'	120°	(1) ETW190VS12UB TMA (1) TMAT1921B78-21A		
B3	EXISTING (TO BE REMOVED)	EMS	RR65-19-02DP	72.0"X8.0"X2.8"	0°	2°	124'	120°	(1) GSM PCS 1900 TMA (TO BE REMOVED)		
C1	EXISTING (TO BE REMOVED)	EMS	RR65-19-02DP	72.0"X8.0"X2.8"	0°	2°	124'	240°	(1) GSM PCS 1900 TMA (TO BE REMOVED)	(4) EXISTING 7/8" COAX CABLES	145'±
C2	PROPOSED	COMMSCOPE	SBNHH-1D65B	72.0"X11.9"X7.1"	0°	2° / 2° / 2°	124'	240°	(1) ETW190VS12UB TMA (1) TMAT1921B78-21A		
C3	EXISTING (TO BE REMOVED)	EMS	RR65-19-02DP	72.0"X8.0"X2.8"	0°	2°	124'	240°	(1) GSM PCS 1900 TMA (TO BE REMOVED)		

NOTES:
1. CONTRACTOR TO VERIFY PROPOSED ANTENNA INFORMATION IS THE MOST CURRENT DATA AT TIME OF CONSTRUCTION.
2. CONTRACTOR TO CONFIRM CABLE LENGTHS PRIOR TO CONSTRUCTION.

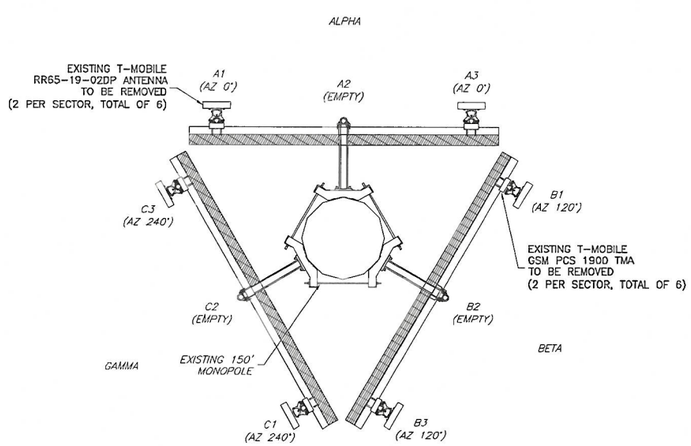

1 A-1 EXISTING ANTENNA ORIENTATION PLAN
NTS

APPROX TRUE NORTH

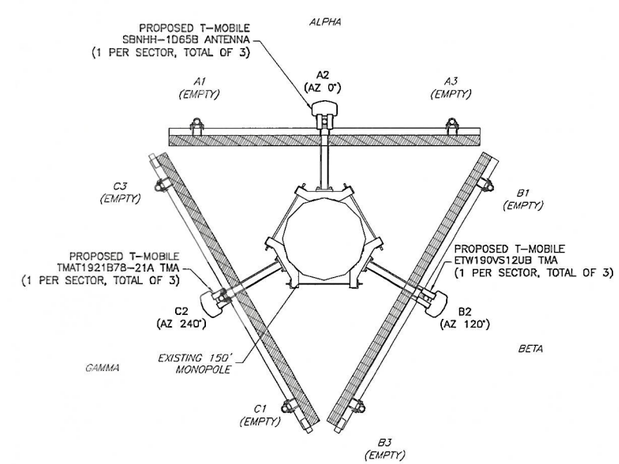

2 A-1 PROPOSED ANTENNA ORIENTATION PLAN
NTS

APPROX TRUE NORTH

STRUCTURAL NOTE:
THE PE LETTER EVALUATION OF THE EXISTING MONOPOLE WITH EXISTING AND PROPOSED LOADS PERFORMED BY: AMERICAN TOWER CORPORATION, PROJECT #: OAA680015, DATED: 06/22/16

ENGINEER

NB+C TOTALLY COMMITTED.
NB+C ENGINEERING SERVICES, LLC.
6055 MARSHALLEE DRIVE, SUITE 300
ELKRIDGE, MD 21075
(410) 712-7092

APPLICANT

T-Mobile
6200 OAK TREE BLVD., SUITE #125
INDEPENDENCE, OH 44131
PHONE: 216-525-6000

MLA PARTNER

AMERICAN TOWER

SITE INFORMATION

A6C0175B
OSHAUGHNESSY DAM OH
ATC SITE # 81738
6013 GLICK ROAD
POWELL, OH 43065
DELAWARE COUNTY

DESIGN RECORD

REVISIONS

REV	DATE	DESCRIPTION	BY
0	07/12/16	FINAL	AP

PROFESSIONAL STAMP

STATE OF OHIO
PHILIP BURTNER
73386
REGISTERED
PROFESSIONAL ENGINEER

ENGINEER

PHILIP BURTNER, P.E.
OH PROFESSIONAL ENGINEER LIC. #73386

SHEET TITLE

ANTENNA PLANS & ANTENNA SCHEDULE

SHEET NUMBER

A-1

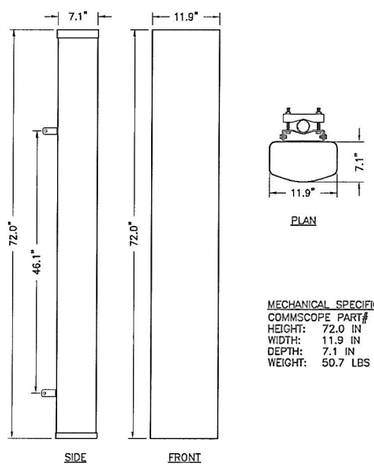

MECHANICAL SPECIFICATIONS
COMMSCOPE PART# – SBNHH-1D65B
HEIGHT: 72.0 IN
WIDTH: 11.9 IN
DEPTH: 7.1 IN
WEIGHT: 50.7 LBS

1 / A-2 COMMSCOPE PANEL ANTENNA
NTS

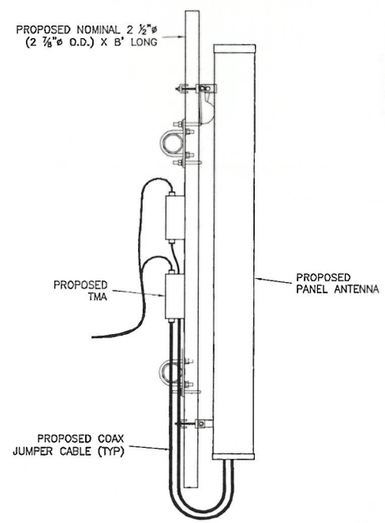

2 / A-2 ANTENNA & TMA MOUNTING DETAIL
NTS

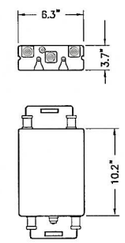

MECHANICAL SPECIFICATIONS
ANDREW PART# ETW190VS12UB
HEIGHT: 10.2 IN
WIDTH: 6.7 IN
DEPTH: 3.7 IN
WEIGHT: 14.6 LBS

3 / A-2 ANDREW TMA DETAIL
NTS

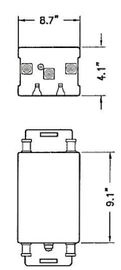

MECHANICAL SPECIFICATIONS
COMMSCOPE PART# TMAT1921B78-21A
HEIGHT: 9.1 IN
WIDTH: 8.7 IN
DEPTH: 4.1 IN
WEIGHT: 17.6 LBS

4 / A-2 COMMSCOPE TMA DETAIL
NTS

ENGINEER

NB+C TOTALLY COMMITTED.
NB+C ENGINEERING SERVICES, LLC.
6095 MARSHALEE DRIVE, SUITE 300
ELKRIDGE, MD 21075
(410) 712-7092

APPLICANT

T-Mobile
6200 OAK TREE BLVD., SUITE #125
INDEPENDENCE, OH 44131
PHONE: 216-525-6000

MLA PARTNER

AMERICAN TOWER

SITE INFORMATION

A6C0175B
OSHAUGHNESSY DAM OH
ATC SITE # 81738
6013 GLICK ROAD
POWELL, OH 43065
DELAWARE COUNTY

DESIGN RECORD

REVISIONS

REV	DATE	DESCRIPTION	BY
0	07/12/16	FINAL	AP

PROFESSIONAL STAMP

STATE OF OHIO
PHILIP BURTNER
73386
REGISTERED
PROFESSIONAL ENGINEER

ENGINEER

PHILIP BURTNER, P.E.
OH PROFESSIONAL ENGINEER LIC. #73386

SHEET TITLE

ANTENNA MOUNTING DETAILS

SHEET NUMBER

A-2

Configuration 703E GDSh_4 Lines_No U2100
(FRBG Ground diplexed with a Hexport for 700/AWS/PCS)

(Antenna & cabling of one sector shown for clarity)

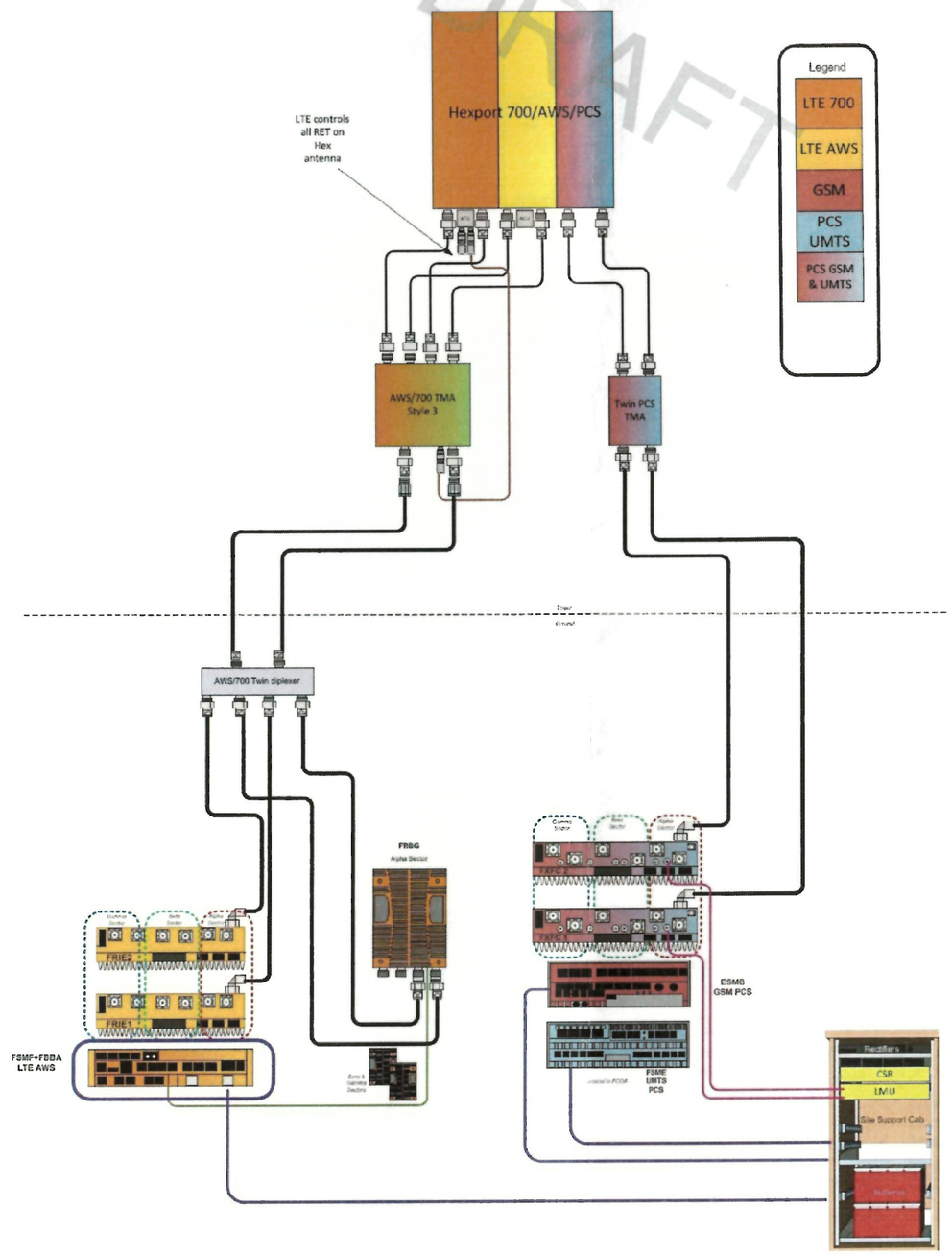

1 / A-3 703E GDSh ANTENNA & CABLING SCHEMATIC

NTS

DRAFT

ENGINEER

NB+C TOTALLY COMMITTED.

NB+C ENGINEERING SERVICES, LLC.
6095 MARSHALEE DRIVE, SUITE 300
ELKRIDGE, MD 21075
(410) 712-7092

APPLICANT

T-Mobile

6200 OAK TREE BLVD., SUITE #125
INDEPENDENCE, OH 44131
PHONE: 216-525-6000

MLA PARTNER

AMERICAN TOWER

SITE INFORMATION

A6C0175B
OSHAUGHNESSY DAM OH
ATC SITE # 81738
6013 GLICK ROAD
POWELL, OH 43065
DELAWARE COUNTY

DESIGN RECORD

REVISIONS

REV	DATE	DESCRIPTION	BY
0	07/12/16	FINAL	AP

PROFESSIONAL STAMP

STATE OF OHIO
PHILIP BURTNER
73386
REGISTERED
PROFESSIONAL ENGINEER

ENGINEER

PHILIP BURTNER, P.E.
OH PROFESSIONAL ENGINEER LIC. #73386

SHEET TITLE

RF PLUMBING DIAGRAM

SHEET NUMBER

A-3

ELECTRICAL & GROUNDING NOTES

1. ALL ELECTRICAL WORK SHALL CONFORM TO THE REQUIREMENTS OF THE NATIONAL ELECTRICAL CODE (NEC) AS WELL AS APPLICABLE STATE AND LOCAL CODES.
2. ALL ELECTRICAL ITEMS SHALL BE U.L. APPROVED OR LISTED AND PROCURED PER SPECIFICATION REQUIREMENTS.
3. THE ELECTRICAL WORK INCLUDES ALL LABOR AND MATERIAL DESCRIBED BY DRAWINGS AND SPECIFICATION INCLUDING INCIDENTAL WORK TO PROVIDE COMPLETE OPERATING AND APPROVED ELECTRICAL SYSTEM.
4. GENERAL CONTRACTOR SHALL PAY FEES FOR PERMITS, AND IS RESPONSIBLE FOR OBTAINING SAID PERMITS AND COORDINATION OF INSPECTIONS.
5. ELECTRICAL AND TELCO WIRING AT EXPOSED INDOOR LOCATIONS SHALL BE IN ELECTRICAL METALLIC TUBING OR RIGID NONMETALLIC TUBING (RIGID SCHEDULE 40 PVC OR RIGID SCHEDULE 80 PVC FOR LOCATIONS SUBJECT TO PHYSICAL DAMAGE) (AS PERMITTED BY CODE).
6. ELECTRICAL AND TELCO WIRING AT CONCEALED INDOOR LOCATIONS SHALL BE IN ELECTRICAL METALLIC TUBING, ELECTRICAL NONMETALLIC TUBING, OR RIGID NONMETALLIC TUBING (RIGID SCHEDULE 40 PVC AS PERMITTED BY CODE).
7. ELECTRICAL AND TELCO WIRING OUTSIDE A BUILDING, ABOVE GRADE AND EXPOSED TO WEATHER SHALL BE IN WATER TIGHT GALVANIZED RIGID STEEL CONDUITS (RGS) AND WHERE REQUIRED IN LIQUID TIGHT FLEXIBLE METAL OR NONMETALLIC CONDUITS.
8. BURIED CONDUIT SHALL BE RIGID NONMETALLIC CONDUIT (RIGID SCHEDULE 40 PVC); DIRECT BURIED IN AREAS OF OCCASIONAL LIGHT TRAFFIC, ENCASED IN REINFORCED CONCRETE IN AREAS OF HEAVY TRAFFIC.
9. LIQUID-TIGHT FLEXIBLE METALLIC CONDUIT SHALL BE USED INDOORS AND OUTDOORS IN AREAS WHERE VIBRATION OCCURS AND FLEXIBILITY IS NEEDED.
10. ELECTRICAL WIRING SHALL BE COPPER WITH TYPE THHN, THWN-2, OR THIN INSULATION.
11. RUN ELECTRICAL CONDUIT OR CABLE BETWEEN ELECTRICAL UTILITY DEMARCATION POINT AND PROJECT OWNER CELL SITE PPC AS INDICATED ON THIS DRAWING. PROVIDE FULL LENGTH PULL ROPE. COORDINATE INSTALLATION WITH UTILITY COMPANY.
12. RUN TELCO CONDUIT OR CABLE BETWEEN TELEPHONE UTILITY DEMARCATION POINT AND PROJECT OWNER CELL SITE TELCO CABINET AND BTS CABINET AS INDICATED ON THIS DRAWING. PROVIDE FULL LENGTH PULL ROPE IN INSTALLED TELCO CONDUIT. PROVIDE GREENLEE CONDUIT MEASURING TAPE AT EACH END.
13. ALL EQUIPMENT LOCATED OUTSIDE SHALL HAVE NEMA 3R ENCLOSURE.
14. GROUNDING SHALL COMPLY WITH NEC ART. 250. ADDITIONALLY, GROUNDING, BONDING AND LIGHTING PROTECTION SHALL BE DONE IN ACCORDANCE WITH METRO MOD CELL SITE GROUNDING STANDARDS.
15. GROUND CABLE SHIELDS MINIMUM AT BOTH ENDS USING MANUFACTURERS CABLE GROUNDING KITS SUPPLIED BY PROJECT OWNER.
16. USE #6 COPPER STRANDED WIRE WITH GREEN COLOR INSULATION FOR ABOVE GRADE GROUNDING (UNLESS OTHERWISE SPECIFIED) AND #2 SOLID TINNED BARE COPPER WIRE FOR BELOW GRADE GROUNDING AS INDICATED ON THE DRAWING.
17. ALL POWER AND GROUND CONNECTIONS TO BE CRIMP-STYLE, COMPRESSION WIRE LUGS AND WIRE NUTS BY HARGER (OR APPROVED EQUAL) RATED FOR OPERATION AT NO LESS THAN 75°C OR CADWELD EXOTHERMIC WELD. DO NOT ALLOW BARE COPPER WIRE TO BE IN CONTACT WITH GALVANIZED STEEL.
18. ROUTE GROUNDING CONDUCTORS ALONG THE SHORTEST AND STRAIGHTEST PATH POSSIBLE, EXCEPT AS OTHERWISE INDICATED. GROUNDING LEADS SHOULD NEVER BE BENT AT RIGHT ANGLE. ALWAYS MAKE AT LEAST 12" RADIUS BENDS. #6 WIRE CAN BE BENT AT 6" RADIUS WHEN NECESSARY. BOND ANY METAL OBJECTS WITHIN 6 FEET OF PROJECT OWNER EQUIPMENT OR CABINET TO MASTER GROUND BAR OR GROUNDING RING.
19. CONNECTIONS TO GROUND BARS SHALL BE MADE WITH TWO HOLE COMPRESSION TYPE COPPER LUGS. APPLY OXIDE INHIBITING COMPOUND TO ALL LOCATIONS.
20. APPLY OXIDE INHIBITING COMPOUND TO ALL MECHANICAL GROUND CONNECTIONS.
21. CONTRACTOR SHALL PROVIDE AND INSTALL OMNI DIRECTIONAL ELECTRONIC MARKER SYSTEM (EMS) BALLS OVER EACH GROUND ROD AND BONDING POINT BETWEEN EXISTING TOWER/ MONOPOLE GROUNDING RING AND EQUIPMENT GROUNDING RING.
22. CONTRACTOR SHALL TEST COMPLETED GROUND SYSTEM AND RECORD RESULTS FOR PROJECT CLOSE-OUT DOCUMENTATION. 5 OHMNS MINIMUM RESISTANCE REQUIRED.
23. CONTRACTOR SHALL CONDUCT ANTENNA, CABLE, AND LNA RETURN-LOSS AND DISTANCE-TO-FAULT MEASUREMENTS (SWEEP TESTS) AND RECORD RESULTS FOR PROJECT CLOSE OUT.
24. THE T-MOBILE ELECTRICAL EQUIPMENT INCLUDING PANEL, SWITCH GEAR AND DISCONNECT ARE TO BE LABELED WITH ENGRAVED BAKELITE LABELS.

GROUNDING LEGEND

▲	COMPRESSION FITTING CONNECTION
●	EXOTHERMIC WELD CONNECTION
—— -- ——	PROPOSED GROUND WIRING
----------	EXISTING GROUND WIRING

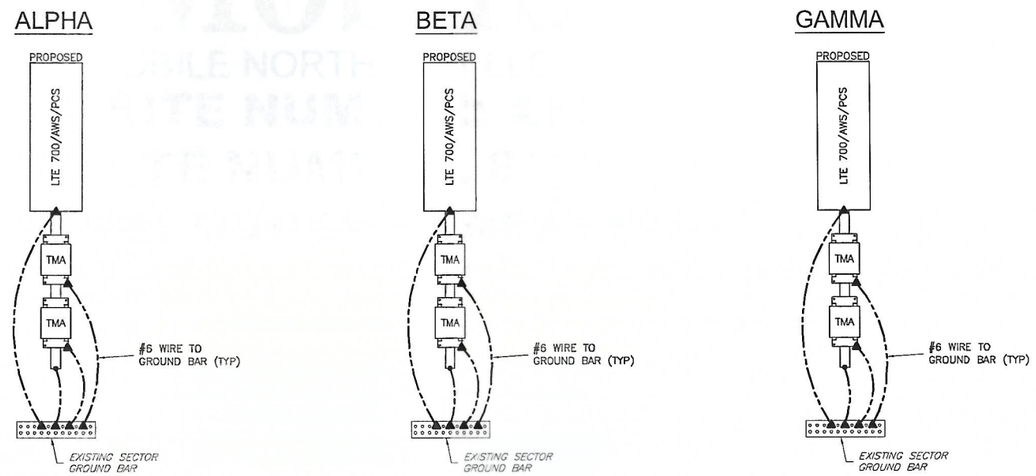

1 / G-1 ANTENNA GROUNDING DETAIL
NTS

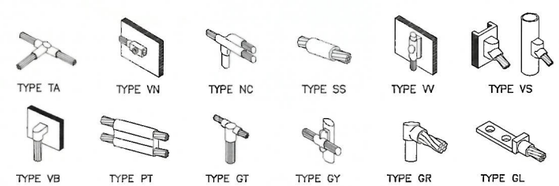

2 / G-1 CADWELD GROUNDING CONNECTION DETAILS
NTS

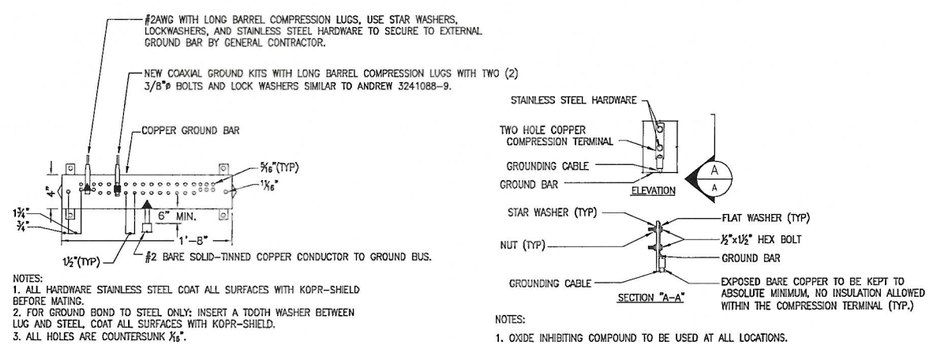

NOTES:
1. ALL HARDWARE STAINLESS STEEL COAT ALL SURFACES WITH KOPR-SHIELD BEFORE MATING.
2. FOR GROUND BOND TO STEEL ONLY: INSERT A TOOTH WASHER BETWEEN LUG AND STEEL, COAT ALL SURFACES WITH KOPR-SHIELD.
3. ALL HOLES ARE COUNTERSUNK 1/16".

NOTES:
1. OXIDE INHIBITING COMPOUND TO BE USED AT ALL LOCATIONS.

3 / G-1 GROUNDING BAR CONNECTIONS
NTS

ENGINEER

NB+C™ TOTALLY COMMITTED.
NB+C ENGINEERING SERVICES, LLC.
6095 MARSHALEE DRIVE, SUITE 300
ELKRIDGE, MD 21075
(410) 712-7002

APPLICANT

T-Mobile
6200 OAK TREE BLVD., SUITE #125
INDEPENDENCE, OH 44131
PHONE: 216-525-6000

MLA PARTNER

AMERICAN TOWER

SITE INFORMATION

A6C0175B
OSHAUGHNESSY DAM OH
ATC SITE # 81738
6013 GLICK ROAD
POWELL, OH 43065
DELAWARE COUNTY

DESIGN RECORD

REVISIONS

REV	DATE	DESCRIPTION	BY
0	07/12/16	FINAL	AP

PROFESSIONAL STAMP

STATE OF OHIO
PHILIP BURTNER
73386
REGISTERED
PROFESSIONAL ENGINEER

ENGINEER

PHILIP BURTNER, P.E.
OH PROFESSIONAL ENGINEER LIC. #73386

SHEET TITLE

ELECTRICAL & GROUNDING DETAILS

SHEET NUMBER

G-1