your trusted advisor
consultants
engineers
architects
planners

To: All Plan Holders of Record

From: CT Consultants, Inc.

Re: ***Addendum No. 1***
Holder-Wright Park Development
City of Dublin

Date: November 14, 2016

This Addendum forms a part of the contract documents and modifies the original bidding documents dated November 2016 and all previous addenda, if any. Acknowledge receipt of this addendum in the space provided in the bid forms. Failure to do so may subject the bidder to disqualification.

PLANS AND SPECIFICATIONS

1. On Sheet 3 of 15, prospective bidders shall add the following note: Contractor shall provide all Construction Layout Staking in accordance with Columbus Construction and Materials Specifications Item 623.
2. On Sheet 4 of 15, prospective bidders shall add to the Estimate of Quantities: Item – 623; Qty – 1; Unit - Lump Sum; Description - Construction Layout Staking.
3. Remove Sheet 5 and replace with the enclosed Sheet 5.
4. Remove Sheet 10 and replace with the enclosed Sheet 10.
5. Remove Sheet 13 and replace with the enclosed Sheet 13.
6. Remove Sheet 14 and replace with the enclosed Sheet 14.
7. Remove Sheet A1 and replace with the enclosed Sheet A1.
8. Remove Sheet A2 and replace with the enclosed Sheet A2.
9. Remove Sheet E1 and replace with the enclosed Sheet E1.
10. Remove Specification Section 33300 and with replace with the enclosed Specification Section 33300 Rev 1 (dated November 14, 2016).

Enclosures

7965 N. High St. | Ste. 340 | Columbus | OH | 43235 | 614.885.1700 | www.ctconsultants.com

ENTRANCE DRIVE CENTER LINE DATA

NO.	DELTA	RADIUS	LENGTH	LINE/CHORD BRG.	START NORTHING/EASTING	END NORTHING/EASTING
L1			51.40'	N0°50'52.62"W	769181.0195,1799001.6147	769232.4106,1799000.8541
C1	40°36'27.69"	48.00'	34.02'	N21°09'05.82"W	769232.4106,1799000.8541	769263.4782,1798988.8339
C2	41°27'20.32"	72.00'	52.09'	N20°43'39.50"W	769263.4782,1798988.8339	769311.1452,1798970.7958
L2			74.11'	N0°00'00.00"E	769311.1452,1798970.7958	769385.2512,1798970.7958
C3	46°58'39.19"	112.00'	91.83'	N23°29'19.60"W	769385.2512,1798970.7958	769467.1329,1798935.2117
C4	39°23'47.22"	202.50'	139.24'	N66°40'32.80"W	769467.1329,1798935.2117	769521.1825,1798809.8558

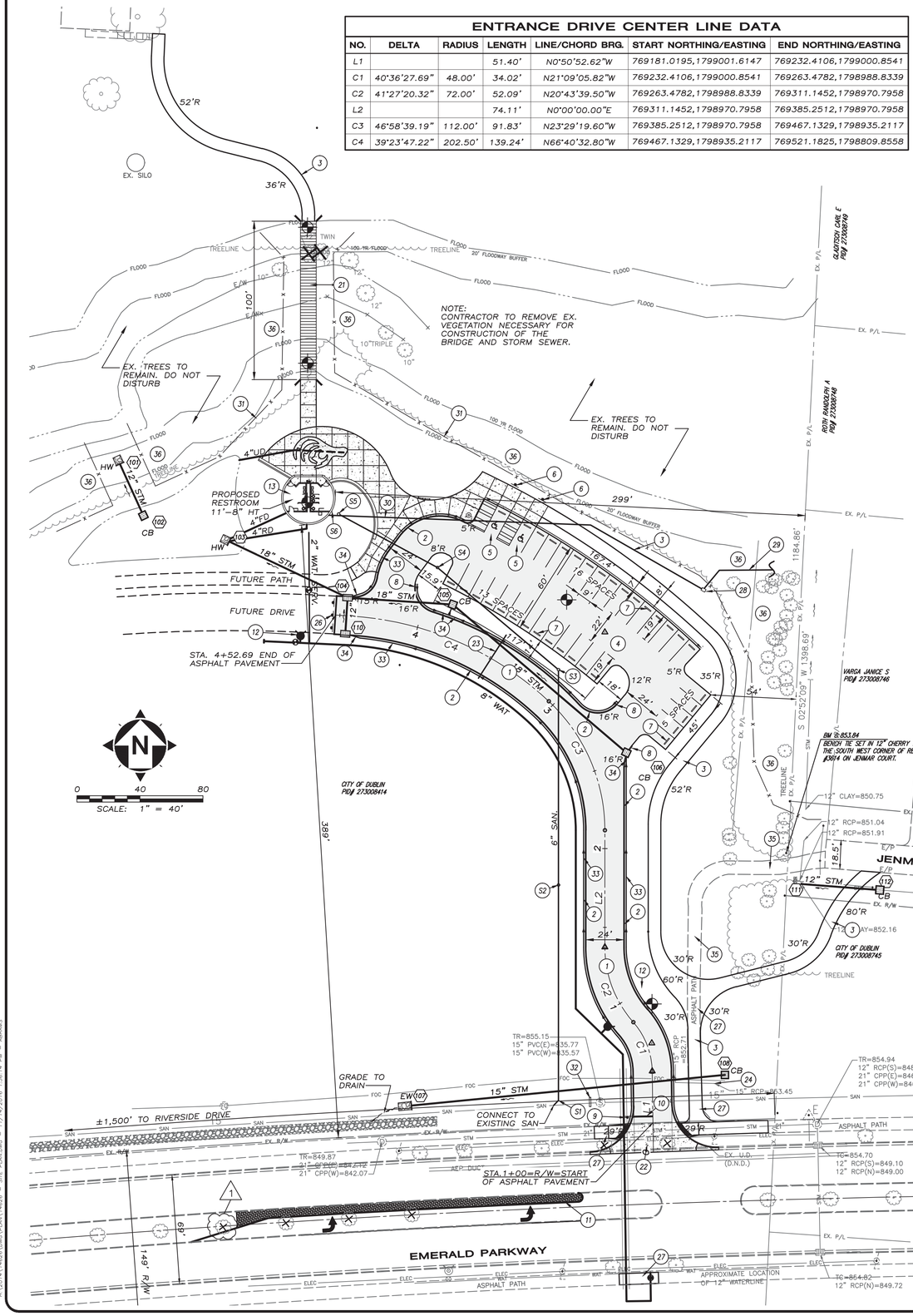

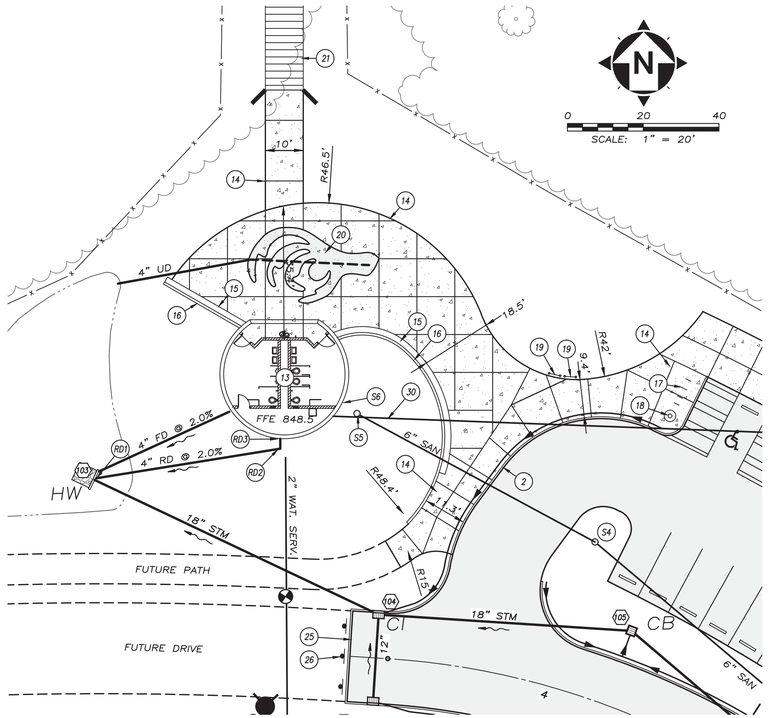

SANITARY LATERAL TABLE

RUN	LENGTH	SLOPE (%)
S5 TO S4	71.4	−1.20
S4 TO S3	100.4	−2.80
S3 TO S2	136.7	−1.20
S2 TO S1	136.7	−1.20

PARKING TABLE

TOTAL PARKING SPACES PROVIDED= 34

ADA SPACES REQUIRED= 2

ADA SPACES PROVIDED= 2

ROOF DRAIN NOTES:

(RD1) ROOF DRAIN INVERT 844.50

(RD2) ROOF DRAIN INVERT– 845.50 (FFE–3.0') PROVIDE RISER TO INV. 847.00

(RD3) ROOF DRAIN INVERT AT BUILDING– 847.17

SANITARY SEWER NOTES:

NOTE: ALL 6 INCH SANITARY LATERAL PIPE SHALL BE LAID AT A SLOPE GREATER THAN THE MINIMUM OF S=0.0104 = 1/8 INCH PER FOOT. THE PREFERRED MINIMUM DESIGN SLOPE IS 1.20 PERCENT.

KEYNOTES:

(S1) TIE INTO EXISTING SANITARY SEWER MAIN INV. ELEV. 835.4. PROVIDE RISER PIPE TO INVERT ELV. 838.72

(S2) SANITARY SEWER CLEAN–OUT. INV ELV.= 840.11, TOP OF CASTING = 853.0

(S3) SANITARY SEWER CLEAN–OUT. INV ELV.= 841.75, TOP OF CASTING = 848.8

(S4) SANITARY SEWER CLEAN–OUT. INV ELV.= 844.56, TOP OF CASTING = 847.9

(S5) SANITARY SEWER CLEAN–OUT. INV. ELV.= 845.42, W/ 1.75' RISER, TOP OF CASTING = 854.3

(S6) SANITARY AT BLDG. INV. ELV. 847.17

SITE LEGEND:

= SPECIALTY CONCRETE PAVEMENT

= HEAVY DUTY ASPHALT PAVEMENT

= EX. TREE TO BE RELOCATED AS DIRECTED BY THE CITY OF DUBLIN AT THE TIME OF CONSTRUCTION

= APPROXIMATE SOIL BORING LOCATION

FD = FOOTER DRAIN

RD = ROOF DRAIN

KEYNOTES:

(1) COMMERCIAL DRIVE
(2) STRAIGHT 18" CONCRETE CURB
(3) 8' WIDE ASPHALT PATH
(4) 34 STALL ASPHALT PARKING LOT
(5) HANDICAP PARKING
(6) HANDICAP PARKING SIGN
(7) BUMPER BLOCKS
(8) CURB END TAPER
(9) PR. STOP SIGN
(10) STOP LINE
(11) EMERALD PARKWAY TURN LANE
(12) PR. HYDRANT
(13) RESTROOM, SEE ARCHITECTURAL PLANS FOR DETAILS
(14) EXPOSED AGGREGATE CONCRETE PAVING
(15) SEAT WALL (SEE ARCH. PLANS)
(16) CONCRETE WALL WITH SPECIAL SURFACE (SEE ARCH. PLANS)
(17) CUSTOM BIKE RACK
(18) TRASH RECEPTACLE
(19) INTERPRETIVE SIGNS (2) (PROVIDED BY OWNER, INSTALLED BY CONTRACTOR)
(20) DECORATIVE GLASS PAVE INLAY
(21) TIMBER PEDESTRIAN BRIDGE
(22) CONCRETE APRON
(23) 2" PVC SCHEDULE 40 CONDUIT SLEEVE (FOR FUTURE LIGHTING)
(24) REMOVE EX. 15" RCP STORM PIPE
(25) TEMPORARY 18" VERTICAL CURB
(26) BARRICADE FOR END OF ROADWAY PAVEMENT PER COC STD DWG 2190
(27) REMOVE AND REPLACE EX. 8' WIDE ASPHALT PATH
(28) ELECTRIC METER
(29) UNDERGROUND ELECTRICAL SERVICE FROM UTILITY POLE. COORDINATE POLE LOCATION WITH AEP.
(30) UNDERGROUND ELECTRIC SERVICE TO PANEL INSIDE RESTROOM.
(31) TREE PROTECTION FENCE
(32) PARK IDENTITY SIGN
(33) 4" PIPE UNDERDRAIN
(34) 10' ~ 4" CONDUIT, TYPE F
(35) REMOVE EXISTING ASPHALT PATH
(36) IF A PROTECTED TREE IS DAMAGED OR REMOVED, IT SHALL BE REPLACED ON AN "INCH PER INCH" BASIS BY THE CONTRACTOR AT HIS OWN EXPENSE.

GENERAL NOTES:

THE RADIUS ON ALL CURBS IS 5.0' FOOT UNLESS NOTED OTHERWISE.

ALL RADII INDICATED SHALL BE FORMED AS CIRCULAR ARCS.

THE CONTRACTOR SHALL VERIFY ALL DIMENSIONS IN THE FIELD BEFORE STARTING CONSTRUCTION. THE CONTRACTOR SHALL BE RESPONSIBLE FOR ALL FIELD DIMENSIONS. IF ANY DISCREPANCIES ARE FOUND IN THESE PLANS FROM THE ACTUAL FIELD CONDITION. THE CONTRACTOR SHALL NOTIFY THE OWNER OR THE OWNERS REPRESENTATIVE IMMEDIATELY.

PROVIDE A SMOOTH TRANSITION FROM NEW IMPROVEMENTS TO EXISTING AREAS.

HANDICAP RAMP AND SIGNAGE SHALL BE IN ACCORDANCE WITH FEDERAL, STATE, COUNTY, CITY, AND LOCAL CODES.

PARKING LOT STRIPES ARE TO BE 4 INCH PAINTED WHITE.

WHEN NEW PAVEMENT MEETS EXISTING ASPHALT, SAWCUT SHALL BE FULL DEPTH. SEAL PAVEMENT JOINTS PER ODOT ITEM 409.

2" PVC SCHEDULE 40 CONDUIT (FOR FUTURE LIGHTING) TO BE INSTALLED AT 24" DEPTH. PROVIDE 90° ELBOWS AT EACH END AND EXTEND TO SURFACE. PROVIDE PULL STRING AND CAP.

EXISTING STREET TREES IMPACTED BY THE CONSTRUCTION OF THE PROJECT SHALL BE RELOCATED AT THE DIRECTION OF THE CITY.

CT Consultants
engineers | architects | planners
Northwoods I Building - 7965 N. High Street - Suite 340, Columbus, Ohio 43235
Phone: 614.885.1700 - Fax: 614.885.1701 - www.ctconsultants.com

NO.	REVISION	DATE
1	ADDED AN "X" FOR A TREE BEING RELOCATED	11-8-16

DRAWING SCALE: • HORZ: AS SHOWN • VERT: N/A
DATE: 11/8/16
DESIGNED BY: MBS
DRAWN BY: MBS
CHECKED BY: DP

HOLDER WRIGHT PARK
VISITOR ORIENTATION CENTER
4729 BRIGHT RD, DUBLIN OH 43017

SITE LAYOUT & UTILITY ROUTING PLAN

PROJECT NO: 14626

SHEET 5 OF 15

N:\2014\14626\DWG\PLAN\14626 - SITE PLAN.DWG - 11/14/2016 1:36:14 PM - ABRAMS

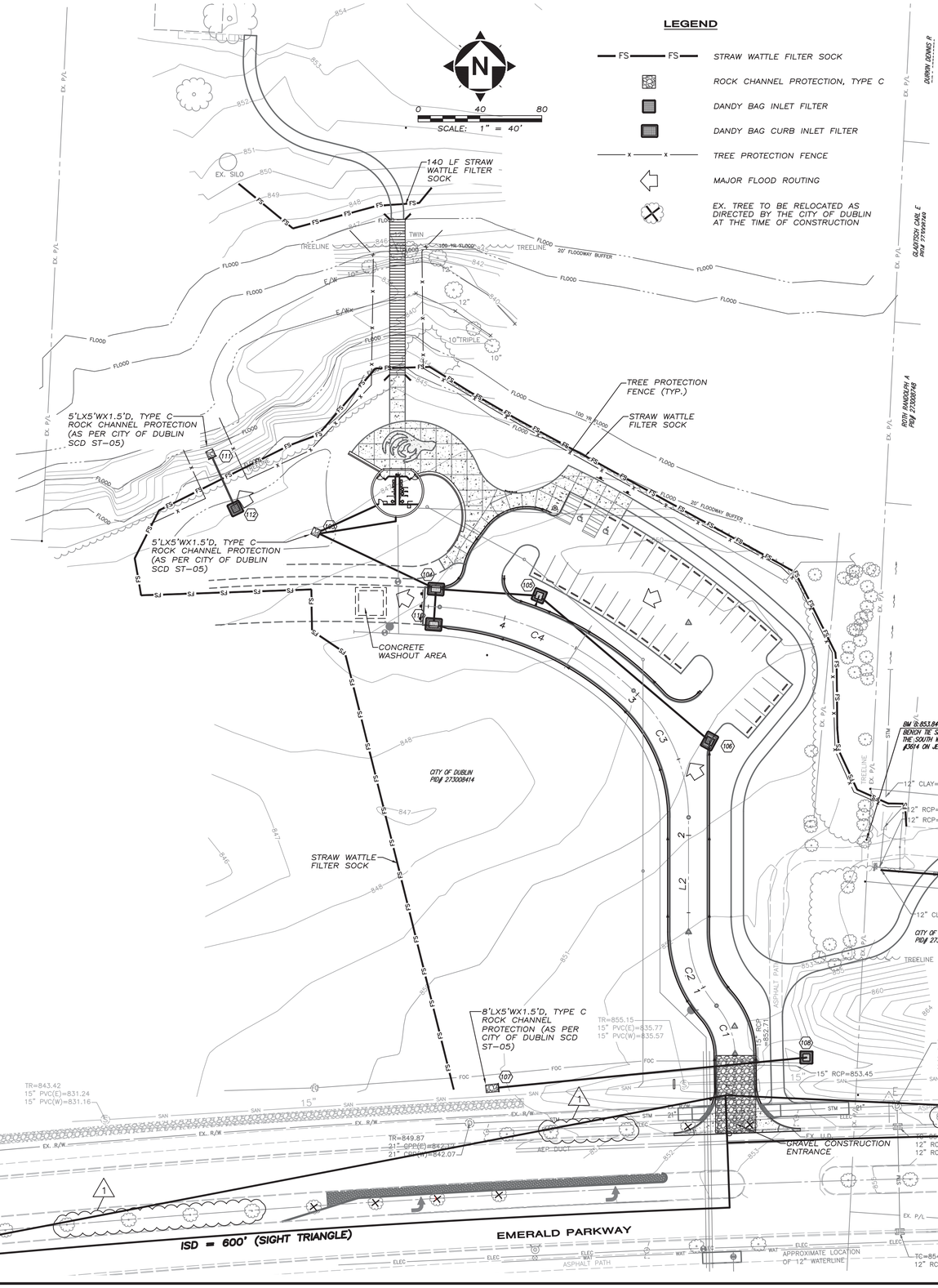

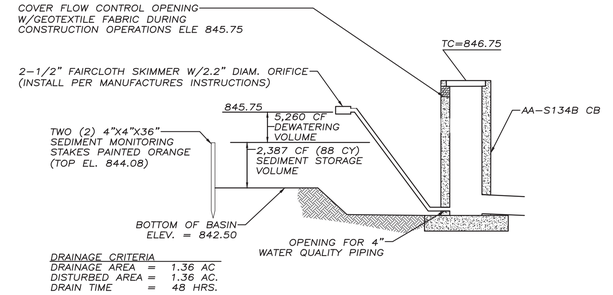

SEDIMENT BASIN DETAIL
NTS

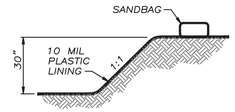

SECTION A-A
NTS

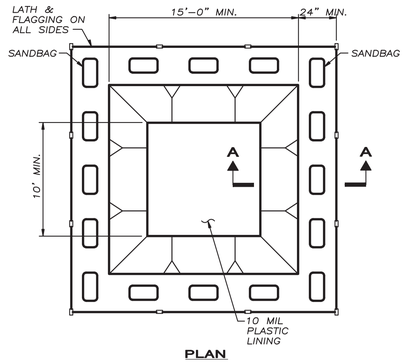

PLAN

CONCRETE WASHOUT AREA DETAIL BELOW GROUND UNIT
NTS

CT Consultants
engineers | architects | planners
Northwoods I Building - 7965 S. High Street - Suite 340, Columbus, Ohio 43235
Phone: 614.885.1700 - Fax: 614.885.1701 - www.ctconsultants.com

NO.	REVISION	DATE
1	REMOVED "X'S FROM TREES NOT BEING RELOCATED	11-8-16

DRAWING SCALE:	
• HORZ:	1" = 40'
• VERT:	N/A
DATE:	11/8/16
DESIGNED BY:	MBS
DRAWN BY:	MBS
CHECKED BY:	DRP

HOLDER WRIGHT PARK
VISITOR ORIENTATION CENTER
4729 BRIGHT RD, DUBLIN OH 43017

SEDIMENT AND EROSION CONTROL PLAN

PROJECT NO: 14626

SHEET 10 OF 15

C:\2014\14626\DWG\PLAN\14626 - SWPPP PLAN.DWG - 11/4/2016 1:36:42 PM - ABRAMS

PLANTING NOTES

1. CONTRACTOR TO VERIFY WITH THE OWNER AND TENANT'S CONSTRUCTION REPRESENTATIVE AND UTILITY COMPANIES THE LOCATIONS OF THE EXISTING UTILITIES PRIOR TO START. CALL OHIO UTILITIES PROTECTION SERVICES AT 1–800–362–2764. CONTRACTOR TO REPAIR ALL DAMAGES TO EXISTING UTILITIES, CURBS, PAVEMENTS, ETC., RESULTING FROM LANDSCAPE INSTALLATIONS WHICH OCCUR DURING THE CONSTRUCTION OF THE PROJECT.

2. PLANT MATERIAL SHALL BE FURNISHED IN THE QUANTITIES AND/OR SPACING AS SHOWN OR NOTED. IN CASE OF DISCREPANCIES BETWEEN THE PLAN AND THE PLANT LIST, THE PLAN SHALL DICTATE.

3. CONTRACTOR SHALL VERIFY SIZES AND LOCATIONS OF ALL SITE ELEMENTS AND IMMEDIATELY INFORM THE OWNER AND TENANT'S CONSTRUCTION REPRESENTATIVE OF ANY DISCREPANCY BETWEEN THE DRAWINGS AND/OR SPECIFICATIONS AND ACTUAL CONDITIONS. NO WORK SHALL BE DONE IN ANY AREA WHERE THERE IS A DISCREPANCY WITHOUT OWNER AND TENANT'S CONSTRUCTION REPRESENTATIVE APPROVAL.

4. CONTRACTOR SHALL BE RESPONSIBLE FOR ALL FINISH GRADING REQUIRED TO PROVIDE PROPER SEED AND PLANTING BEDS. PROVIDE A MINIMUM OF 6" OF TOPSOIL TO ALL DISTURBED LANDSCAPE AREAS.

5. CONTRACTOR SHALL PROVIDE THE FOLLOWING SOIL AMENDMENTS:

   SOIL AMENDMENT: 'COM–TIL' ORGANIC COMPOST
   7000 S.R. 104 SOUTH
   LOCKBOURNE, OHIO 43137
   (614) 645–3153.

   TURF & SHRUB BEDS: SPREAD 3" OF 'COM–TIL' OVER NEW LANDSCAPE AREAS AND INCORPORATE INTO THE TOP 8" OF THE SOIL BY MECHANICAL TILLER.

   TREES & SHRUBS: MIX 30% COM–TIL TO 70% EXISTING SOIL FROM PLANT PIT EXCAVATION. IF EXCAVATED SOIL IS NOT SUITABLE, SUPPLEMENT WITH IMPORTED TOPSOIL.

6. ALL PLANT MATERIAL TO MEET OR EXCEED AMERICAN STANDARD FOR NURSERY STOCK, CURRENT EDITION, AS SET FORTH BY AMERICAN ASSOCIATION OF NURSERYMEN.

7. ALL PLANT MATERIALS SUBJECT TO INSPECTION PRIOR, DURING AND AFTER INSTALLATION. ANY PLANT NOT MEETING THE REQUIREMENTS WILL BE CAUSE FOR REJECTION BY THE OWNER'S REPRESENTATIVE. ALL REJECTED PLANTS SHALL BE IMMEDIATELY REMOVED AND DISPOSED OF BY THE CONTRACTOR AND THE REPLACEMENT MATERIAL SHALL BE PROVIDED.

8. ALL SUBSTITUTIONS AND PLAN CHANGES MUST BE APPROVED BY OWNER'S REPRESENTATIVE PRIOR TO ANY ACTION TAKEN. TREES SHALL BE PROTECTED AND HANDLED CAREFULLY AT ALL TIMES DURING TRANSPORT & HANDLING TO PREVENT DRYING OF TREE OR ROOT BALL BY WINDS, AND TO PREVENT ANY DAMAGE OR BREAKAGE OF THE ROOT BALL. BARK SHALL BE PROTECTED FROM BRUISING OR ABRASION.

9. WATER TREES IMMEDIATELY AFTER PLANTING AND CONTINUE TO WATER UNTIL FINAL ACCEPTANCE BY OWNER.

10. PLANT LOCATIONS AND BEDS SHALL BE LOCATED BY CONTRACTOR AND APPROVED BY OWNER'S REPRESENTATIVE PRIOR TO PLANT INSTALLATION.

11. BED LINE TO BE 18" FROM BASE OF PLANT MATERIAL UNLESS OTHERWISE INDICATED

12. ALL SHRUB AND BED AREAS TO BE MULCHED WITH THREE INCHES (3") DEPTH MIN. SHREDDED HARDWOOD MULCH. SUBMIT SAMPLE TO OWNER FOR APPROVAL.

13. ALL TREES SHALL BE SUPPORTED IMMEDIATELY AFTER PLANTING BY STAKING OR GUYING. SEE DETAILS.

14. ALL AREAS OUTSIDE OF PLANTING BEDS SHALL BE SEEDED OR SODDED AS SHOWN ON THE PLANS. THE TURF MIXES SHALL BE OF THE FOLLOWING COMPOSITIONS:

   SOD: BLEND OF NOT LESS THAN THREE IMPROVED VARIETIES OF KENTUCKY BLUEGRASS AND PERENNIAL RYEGRASS. SUBMIT MIX CERTIFICATION FROM SUPPLIER AS LOCALLY GROWN FOR ACCEPTANCE.

   SEED MIX: SUBMIT CERTIFICATION FROM SEED SUPPLIER FOR ACCEPTANCE PRIOR TO PLACING ORDER. ALSO PROVIDE SPECIFICATIONS FOR TACKIFIER AND FIBER MULCH AS PROVIDED BY SUPPLIER.

   RATE: 6 LBS./ 1,000 SQ. FT., APPLY BY DRILL SEEDING METHOD IN TWO DIRECTIONS.

   STARTER FERTILIZER: 16–25–12; APPLY AT RATE EQUAL TO 1 LB. OF ACTUAL NITROGEN PER 1,000 S.F.

   TACKIFIER: 60 GAL./ ACRE

   FIBER HYDROMULCH: 1,500 LBS./ ACRE, DYED GREEN.

15. FINISHED TURF (SOD OR SEED) TO BE FLUSH WITH TOP OF ADJACENT CURB OR WALK. COORDINATE WITH OWNER'S REPRESENTATIVE IN FIELD AS REQUIRED.

16. THE CONTRACTOR SHALL GUARANTEE ALL TREES, SHRUBS AND GROUND COVERS FOR A PERIOD OF ONE YEAR (1) FROM DATE OF FINAL ACCEPTANCE. REPLACE MATERIAL WITHIN SEVEN (7) DAYS OF NOTIFICATION BY THE OWNER OR HIS REPRESENTATIVE.

17. PERFORM CLEANING DURING INSTALLATION OF LANDSCAPING WORK AND UPON COMPLETION OF THE WORK. REMOVE FROM SITE ALL EXCESS LANDSCAPE RELATED MATERIAL, SOIL DEBRIS AND EQUIPMENT. REPAIR DAMAGE RESULTING FROM LANDSCAPING OPERATIONS. SWEEP AND HOSE DOWN PAVED SURFACES AFFECTED BY LANDSCAPING OPERATIONS. COORDINATE WITH OWNER'S REPRESENTATIVE AND OTHER CONTRACTORS FOR FINAL CLEANUP PRIOR TO CLEANING.

18. MAINTENANCE: THE LANDSCAPE CONTRACTOR SHALL MAINTAIN THE COMPLETED LANDSCAPE AND IRRIGATION SYSTEMS UNTIL THE DATE OF FINAL ACCEPTANCE.

   A. MOWING – (MIN. ONCE PER WEEK, EXCEPT IN FUTURE EXPANSION AREAS WHICH WILL REQUIRE ONCE PER THREE WEEKS.

   B. TRIMMING – SHRUBS, TREES, GROUND COVERS, PERENNIALS, AND ANNUALS, MIN. 2 TIMES PER YEAR OR AS REQUIRED.

   C. FERTILIZING – APPLY FERTILIZER AT A RATE EQUAL TO 1 LB. OF ACTUAL NITROGEN/ 1,000 S.F. IN THE SPRING AND FALL TO ALL TURF AND PLANTING EXCEPT IN FUTURE EXPANSION TURF AREAS WHICH WILL REQUIRE NO APPLICATION.

   D. BED EDGING – EDGE ALL BEDS BY HAND, SPADE AT LEAST 2 TIMES PER YEAR AND TOP MULCHING–DRESS WOOD MULCH IN FALL AND SPRING.

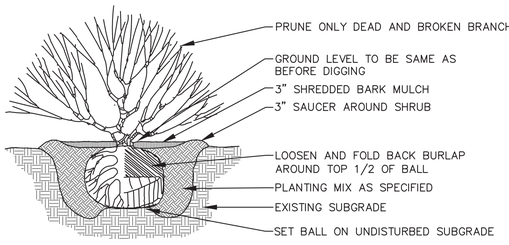

2 TYPICAL SHRUB PLANTING
NOT TO SCALE

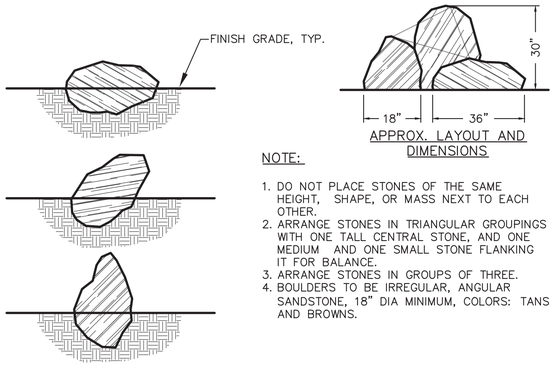

APPROX. LAYOUT AND DIMENSIONS

NOTE:

1. DO NOT PLACE STONES OF THE SAME HEIGHT, SHAPE, OR MASS NEXT TO EACH OTHER.
2. ARRANGE STONES IN TRIANGULAR GROUPINGS WITH ONE TALL CENTRAL STONE, AND ONE MEDIUM AND ONE SMALL STONE FLANKING IT FOR BALANCE.
3. ARRANGE STONES IN GROUPS OF THREE.
4. BOULDERS TO BE IRREGULAR, ANGULAR SANDSTONE, 18" DIA MINIMUM, COLORS: TANS AND BROWNS.

4 TYPICAL STONE SETTING
NOT TO SCALE

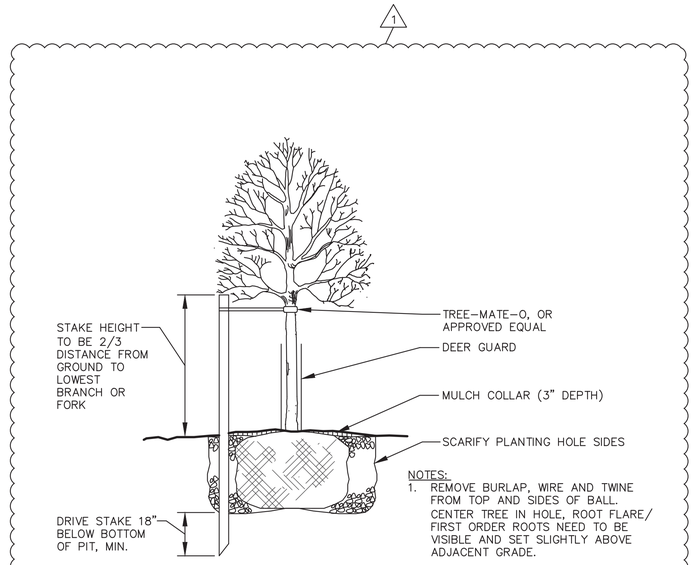

NOTES:
1. REMOVE BURLAP, WIRE AND TWINE FROM TOP AND SIDES OF BALL. CENTER TREE IN HOLE, ROOT FLARE/ FIRST ORDER ROOTS NEED TO BE VISIBLE AND SET SLIGHTLY ABOVE ADJACENT GRADE.
2. PRUNE ONLY DEAD OR BROKEN LIMBS. DO NOT CUT THE CENTRAL LEADER.
3. HOLE DIAMETER TO BE THREE TIMES THE SIZE OF THE ROOT BALL.

1 DECIDUOUS TREE
NOT TO SCALE

NOTES:
COMPOST SHALL CONSIST OF STERILIZED, COMPOSTED MATERIAL. CONTRACTOR SHALL SUBMIT SAMPLE TO LANDSCAPE ARCHITECT FOR APPROVAL PRIOR TO INSTALLATION OF PLANTS.

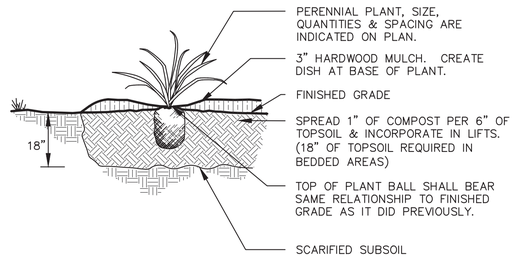

3 PERENNIAL/GROUNDCOVER
NOT TO SCALE

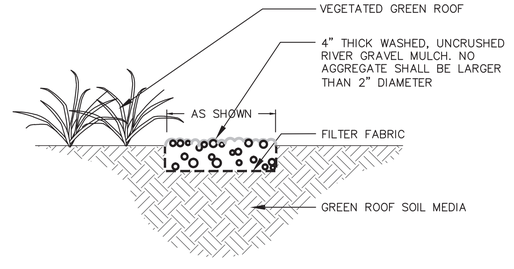

5 GRAVEL MULCH
NOT TO SCALE

CT Consultants
engineers | architects | planners
Northwoods I Building - 7965 N. High Street - Suite 240, Columbus, Ohio 43235
Phone: 614.885.1700 - Fax: 614.885.1701 - www.ctconsultants.com

NO.	REVISION	DATE
1	REVISED DECIDUOUS TREE DETAIL	11–8–16

DRAWING SCALE:	
• HORZ:	N/A
• VERT:	N/A
DATE:	11/8/16
DESIGNED BY:	MBS
DRAWN BY:	MBS
CHECKED BY:	GS

HOLDER WRIGHT PARK
VISITOR ORIENTATION CENTER
4729 BRIGHT RD, DUBLIN OH 43017

PLANTING NOTES & DETAILS

PROJECT NO: 14626

SHEET 13 OF 15

H:\2014\14626\DWG\PLAN\14626 - LANDSCAPING PLAN.DWG - 11/14/2016 2:27:07 PM - ABRAMS

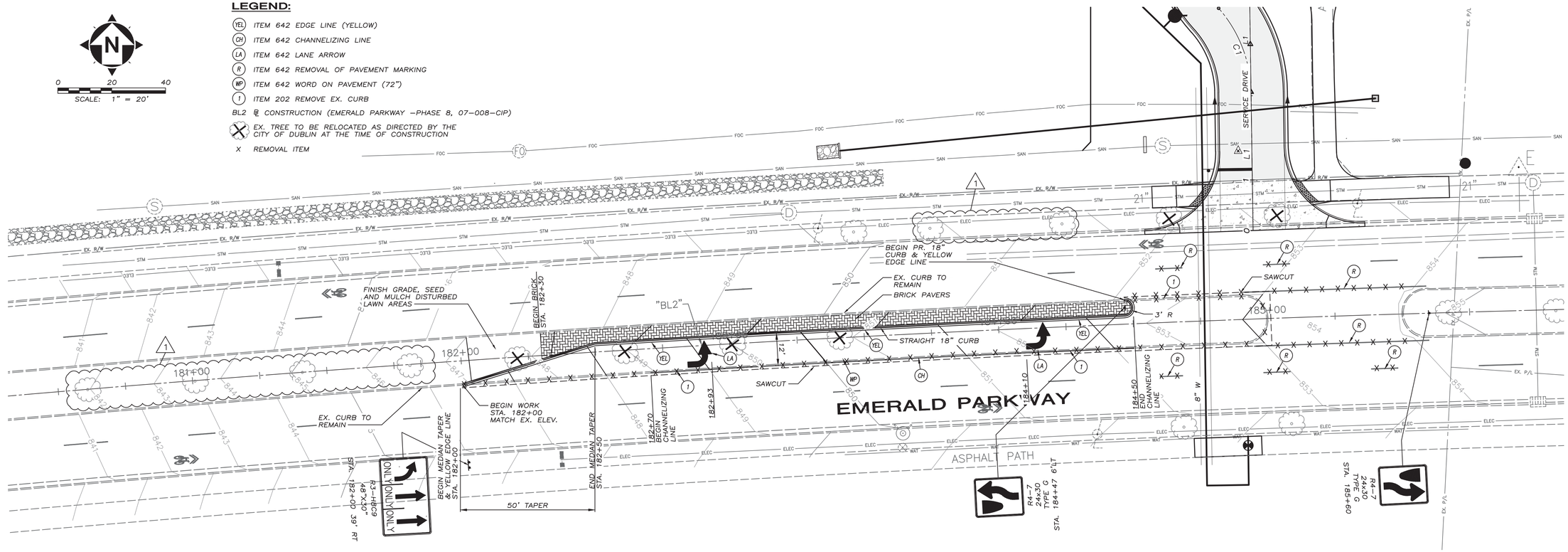

NOTES:

1. EXISTING ROADWAY LAYOUT, STATIONING AND GRADING IS BASED ON EMERALD PARKWAY–PHASE 8 (07–008–CIP) DESIGN PLANS. CONTRACTOR TO REPORT ANY DISCREPANCIES TO THE OWNER PRIOR TO CONSTRUCTION.
2. EX. STREET TREES TO BE RELOCATED AT THE DIRECTION OF THE CITY.
3. FOR MAINTENANCE OF TRAFFIC NOTES, SEE SHEET 2

TURN LANE ESTIMATE OF QUANTITIES

ITEM	QTY	UNIT	DESCRIPTION
			SITE PREPARATION
202	364	LF	CURB REMOVED
202	140	SY	PAVEMENT REMOVED
642	1	LS	REMOVAL OF PAVEMENT MARKING
661	6	EA	TREE RELOCATION (1)
			ROADWAY
203	298	CY	EXCAVATION
204	475	SY	SUBGRADE COMPACTION
204	1	HOUR	PROOF ROLLING
255	375	LF	FULL DEPTH PAVEMENT SAWING
301	112	CY	ASPHALT CONCRETE BASE
304	80	CY	AGGREGATE BASE
407	447	SY	TACK COAT
448	22	CY	ASPHALT CONCRETE, INTERMEDIATE COURSE, (HEAVY TRAFFIC), PG64–22
448	16	CY	ASPHALT CONCRETE, SURFACE COURSE, (HEAVY TRAFFIC), PG64–22
609	258	LF	STRAIGHT 18" CONCRETE CURB
614	1	LS	MAINTAINING TRAFFIC
630	52	LF	GROUND MOUNTED SUPPORT, SQUARE POST & ANCHOR TRAIN CAP–SEE STANDARD DRAWING RD–10
630	30	SF	SIGN, FLAT SHEET – SEE RD–10
644	0.05	MILE	EDGE LINE (YELLOW)
644	180	LF	CHANNELIZING LINE
644	2	EA	LANE ARROW
SPEC	127	SY	BRICK PAVERS

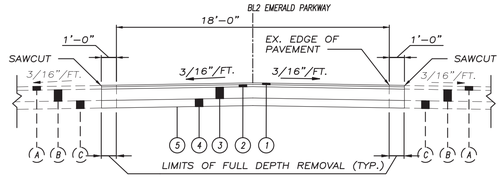

MEDIAN SECTION
STA. 184+50 TO STA. 185+00

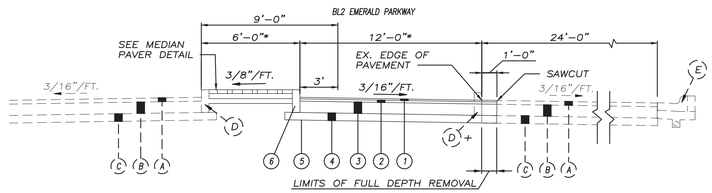

* VARIES 0'–0" TO 12'–0" FROM STA. 181+35 TO STA. 184+50
\+ TO BE REMOVED

TURN LANE SECTION
STA. 182+00 TO STA. 184+50

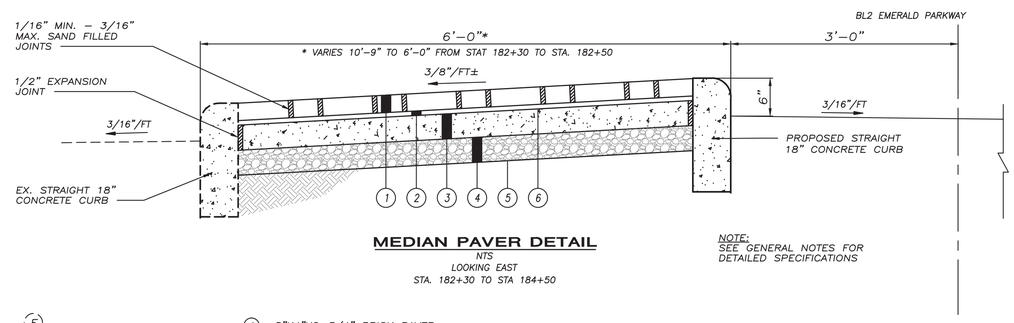

MEDIAN PAVER DETAIL
NTS
LOOKING EAST
STA. 182+30 TO STA 184+50

NOTE:
SEE GENERAL NOTES FOR DETAILED SPECIFICATIONS

LEGEND

(A) EX. ASPHALT (T=3")
(B) EX. BITUMINOUS AGGREGATE BASE (T=9")
(C) EX. AGGREGATE BASE (T=6")
(D) EX. 18" STRAIGHT CURB
(E) EX. COMBINATION CURB AND GUTTER

(1) ITEM 448 1.25" ASPHALT CONCRETE SURFACE COURSE (HEAVY TRAFFIC), PG64–22
(2) ITEM 448 1.75" ASPHALT CONCRETE SURFACE COURSE (HEAVY TRAFFIC), PG64–22
(3) ITEM 301 9" ASPHALT CONCRETE BASE
(4) ITEM 304 6" AGGREGATE BASE
(5) ITEM 204 SUBGRADE COMPACTION
(6) ITEM 609 STRAIGHT 18" CONCRETE CURB

(1) 8"X4"X2–3/4" BRICK PAVER
(2) 3/4" – BITUMINOUS ASPHALT SETTING BED (PG64–22)
(3) 4" – ITEM 305 COLS. CLASS "C" CONCRETE BASE
(4) 4" – ITEM 304 COMPACTED AGGREGATE BASE
(5) ITEM 204 – SUBGRADE COMPACTION
(6) NEOPRENE – MODIFIED ASPHALT ADHESIVE

GENERAL NOTES- BRICK PAVERS, AS PER PLAN:

PAVERS: THE PAVERS SHALL BE REGIMENTAL FULL RANGE, WITH A CHAMFERED EDGE, AND SPACER LUGS, 8"X4"X2–3/4", MADE BY BLENDON BRICK COMPANY, CANTON OHIO, LAID IN A HARRINGBONE PATTERN.

NEOPRENE– MODIFIED ASPHALT ADHESIVE: FURNISH NEOPRENE MODIFIED ASPHALT ADHESIVE THAT CONTAINS 2% GRADE WM1 NEOPRENE, OXIDIZED ASPHALT WITH 1 150 DEGREE SOFTENING POINT (77 PENETRATION), AND 10% LONG–FIBERED INERT MATERIAL, AS SUPPLIED BY SEIDEL COMPANY, INC., NEWBURYPORT, MA (617) 649–6740; HASTINGS PAVEMENT COMPANY, INC., LAKE SUCCESS, NY, (516) 379–3500, OR APPROVED EQUAL.

BITUMINOUS SETTING BED, 3/4 INCH: FURNISH ASPHALT CEMENT CONFORMING TO ASTM D 3381, PG64–22. FINE AGGREGATE SHALL BE NATURAL SAND AND /OR STONE SAND COMPOSTED OF HARD, DURABLE, UNCOATED PARTICLES, FREE FROM CLAY, SILT, ORGANIC MATERIAL, OR OTHER DELETERIOUS SUBSTANCES. ALL SAND SHALL BE UNIFORMLY GRADED AND PASS A NO. 4 SIEVE, MEETING THE REQUIREMENTS OF ASTM C 136. THE DRIED FINE AGGREGATE SHALL BE MIXED WITH HOT ASPHALT CEMENT AT THE PLANT AND HEATED TO APPROXIMATELY 300 DEGREES (F). APPROXIMATE MATERIAL PROPORTIONS SHALL BE 7% ASPHALT CEMENT AND 93% FINE AGGREGATE; OR 140 LBS ASPHALT TO 1,860 LBS FINE AGGREGATE PER TON.

SAND: ALL JOINTS SHALL BE FILLED WITH A POLYMERIC SAND. SAND SHALL BE ALLIANCE XXX GATOR SAND AND SLATE GRAY IN COLOR OR APPROVED EQUAL.

EDGING: A BRICK/PAVER EDGING SHALL BE PROVIDED ALONG ANY PAVER EDGE NOT RESTRAINED BY CURB. EDGING TO BE PERMALOC ASPHALT EDGE, BLACK, 3"X3", OR APPROVED EQUAL.

PAYMENT FOR MEDIAN PAVERS WILL BE MADE AT THE UNIT PRICE BID PER SQUARE YARD FOR ITEM SPECIAL – BRICK PAVERS, A.P.P. AND SHALL INCLUDE THE SUBGRADE COMPACTION, COMPACTED AGGREGATE BASE, CONCRETE BASE SLAB, BITUMINOUS ASPHALT SETTING BED, NEOPREME–MODIFIED ASPHALT ADHESIVE, EXPANSION JOINT MATERIAL, BRICK PAVERS AND POLYMERIC SAND FILL.

CT Consultants
engineers | architects | planners
Northwoods I Building - 7965 N. High Street - Suite 340, Columbus, Ohio 43235
Phone: 614.885.1700 - Fax: 614.885.1701 - www.ctconsultants.com

NO.	REVISION	DATE
1	REMOVED "X"S FROM TREES NOT BEING RELOCATED AND REVISED TOTAL OF ITEM 661 TREE RELOCATION	11–8–16

DRAWING SCALE:	
• HORZ:	AS SHOWN
• VERT:	N/A
DATE:	11/8/16
DESIGNED BY:	ET
DRAWN BY:	MBS
CHECKED BY:	DRP

HOLDER WRIGHT PARK
VISITOR ORIENTATION CENTER
4729 BRIGHT RD, DUBLIN OH 43017

EMERALD PARKWAY
TURN LANE PLANS

PROJECT NO: 14626

SHEET 14 OF 15

H:\2014\14626\PLANS\14626 - TURN LANE.DWG - 11/14/2016 1:37:54 PM - ABRAMS

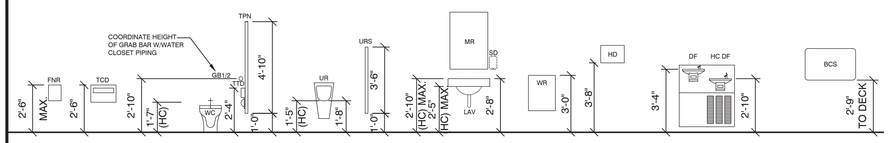

TYP. TOILET FIXTURE AND ACCESSORY MOUNTING

SCALE: 1/4" = 1'-0"

TOILET ROOM ACCESSORIES SCHEDULE

ALL FIXTURES INDICATED TO BE HANDICAPPED ACCESSIBLE (HC) SHALL BE INSTALLED AT HEIGHTS AND LOCATIONS THAT ARE ACCESSIBLE PER OBC CHAPTER 11 AND ICC A117.1-2009, ACCESSIBILITY AND USABLE BUILDINGS AND FACILITIES AS AMENDED BY OBC SECTION 1112. ALL OTHER ACCESSORIES SHALL BE INSTALLED AT HEIGHTS RECOMMENDED BY MFR.

SEE PLANS FOR QUANTITY AND LOCATION OF ACCESSORIES.

TAG	ITEM	MFG. NO. / DESCRIPTION
BCS	BABY CHANGING STATION	KOALA KARE KB110-SSWM
DF	DRINKING FOUNTAIN	SEE PLUMBING DRAWINGS.
FD	FLOOR DRAIN	SEE PLUMBING DRAWINGS.
FNR	FEMININE NAPKIN RECEPTACLE	BOBRICK MODEL B-270.
GB1	GRAB BAR 36"	BOBRICK MODEL B6806-36.
GB2	GRAB BAR 42"	BOBRICK MODEL B6806-42.
GB3	GRAB BAR 24" (VERTICAL)	BOBRICK MODEL B6806-24.
HD	HAND DRYER	DYSON AIRBLADE V 301829-01
LAV	WALL HUNG LAVATORY	SEE PLUMBING DRAWINGS.
MR	STAINLESS STEEL MIRROR	BOBRICK MODEL B-1556 2436.
SD	SOAP DISPENSER	BY OWNER.
TPN	TOILET PARTITION CEILING HUNG	SOLID-POLYMER PARTITIONS. SEE SPECIFICATIONS.
TCD	TOILET SEAT COVER DISPENSER	BOBRICK B-4221
TTD	TOILET TISSUE DISPENSER	BOBRICK MODEL B-2892
UR/ HC UR	URINAL / HANDICAPPED URINAL	SEE PLUMBING DRAWINGS
URS	URINAL SCREEN	SOLID-POLYMER PARTITIONS. SEE SPECIFICATIONS.
WC / HC WC	WATER CLOSET / HANDICAPPED WATER CLOSET	SEE PLUMBING DRAWINGS.
WH	WATER HYDRANT / HOSE BIBB	SEE PLUMBING DRAWINGS.
WR	WASTE RECEPTACLE	BOBRICK MODEL B-277

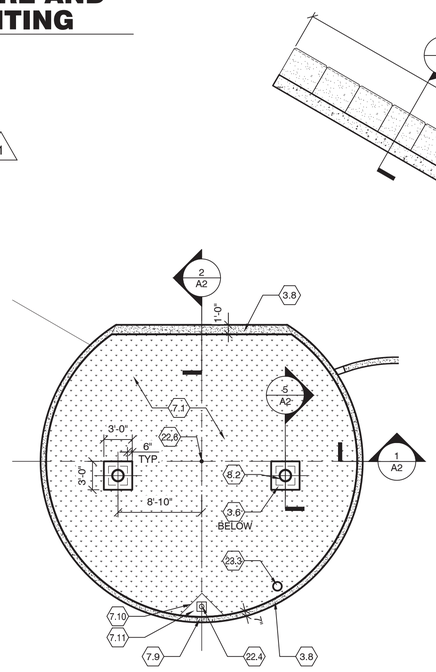

2 A1 **ROOF PLAN**

SCALE: 1/8" = 1'-0"

NORTH

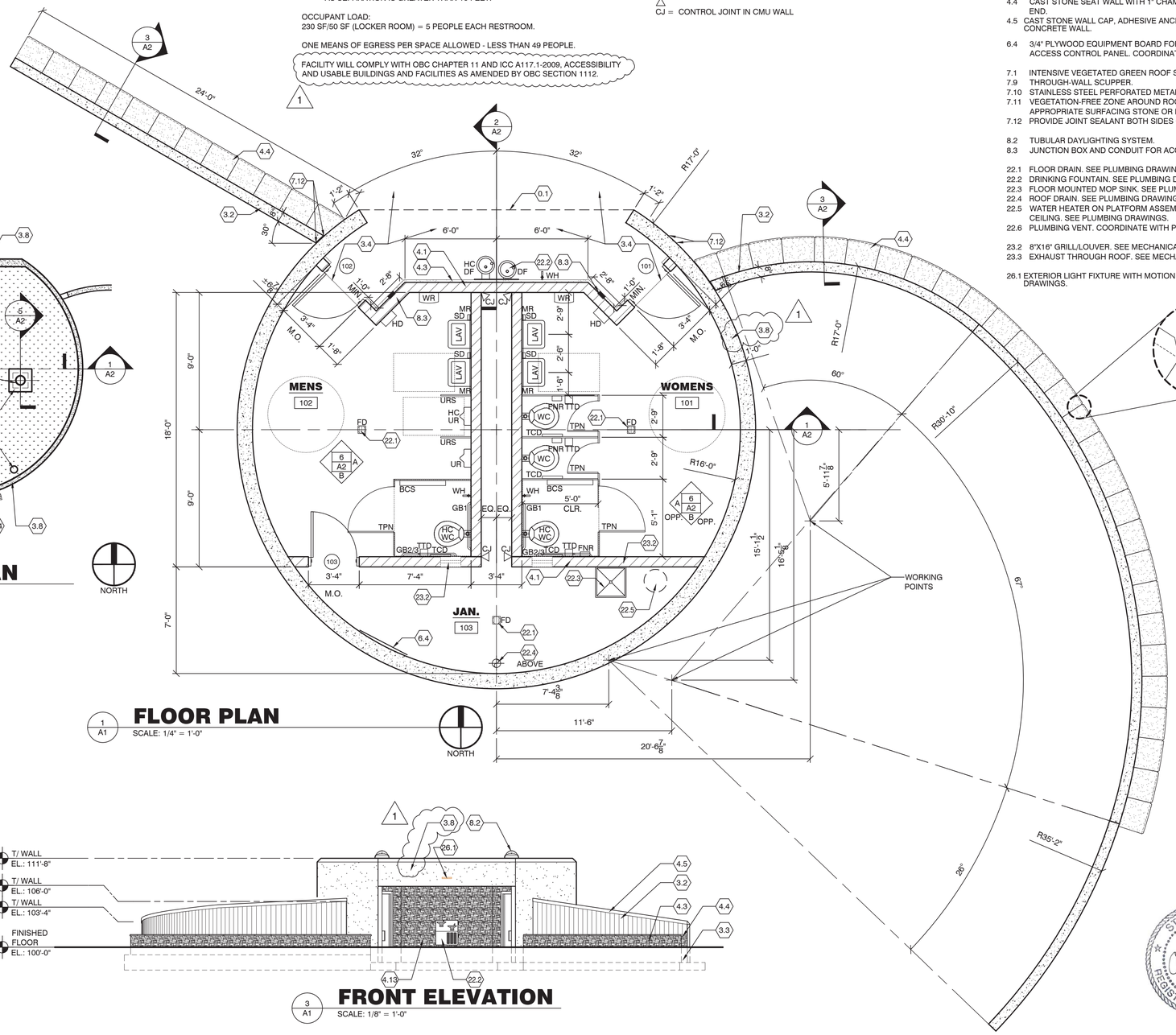

1 A1 **FLOOR PLAN**

SCALE: 1/4" = 1'-0"

NORTH

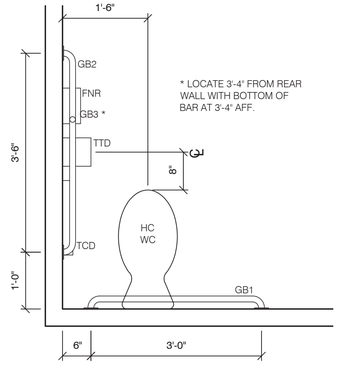

* LOCATE 3'-4" FROM REAR WALL WITH BOTTOM OF BAR AT 3'-4" AFF.

TYP. ACCESSIBLE WC LAYOUT

SCALE: 3/4" = 1'-0"

GENERAL OPENING NOTES:

1. HOLLOW METAL DOORS AND FRAMES SHALL BE 54 MIL. THICK (16 GAUGE). 4" HEAD.
2. HINGES SHALL BE FULL MORTISED, HEAVY DUTY, BALL BEARING, STAINLESS STEEL. THREE NRP HINGES PER DOOR.
3. LOCKSETS SHALL BE MORTISED, STAINLESS STEEL SETS WITH LEVER TRIM. REVIEW KEYING REQUIREMENTS WITH OWNER.
4. PAINT ALL HOLLOW METAL DOORS AND FRAMES.
5. UNDERCUT DOORS 3/4" MIN.

DOOR 101 AND 102:

++ 3'-0" x 7'-0" HOLLOW METAL DOOR AND FRAME. INSULATED.
++ HINGES.
++ STOREROOM LOCKSET WITH ELECTRIC STRIKE.
++ DOOR CLOSER WITH OVERHEAD DEAD STOP
++ KICK PLATE.

ELECTRIC STRIKE OPERATED BY LOW VOLTAGE POWER SUPPLY AND ACCESS CONTROL PANEL LOCATED IN JAN. (103). STRIKE ALSO OPERATED BY CARD READER. OWNER'S SECURITY VENDOR SHALL PROVIDE POWER SUPPLY, ACCESS CONTROL PANEL, CARD READER, AND LOW VOLTAGE WIRING/CONNECTIONS. COORDINATE REQUIRED PATHWAYS WITH OWNER'S SECURITY VENDOR.

DOOR 103:

++ 3'-0" x 7'-0" HOLLOW METAL DOOR AND FRAME
++ HINGES.
++ STOREROOM LOCKSET.

3 A1 **FRONT ELEVATION**

SCALE: 1/8" = 1'-0"

CODE COMPLIANCE SUMMARY

PROJECT SHALL BE CONSTRUCTED PER THE 2011 OHIO BUILDING CODE AND ALL APPLICABLE AMENDMENTS.

PROJECT DESCRIPTION:
THE BUILDING WILL BE CONSTRUCTED AS A MEN'S AND WOMEN'S PARK RESTROOM WITH JANITOR'S CLOSET FOR SUPPLIES.

CONSTRUCTION TYPE:
CONSTRUCTION TYPE IS 2B (UNPROTECTED; NONCOMBUSTIBLE).

USE AND OCCUPANCY:
BUILDING IS AN ACCESSORY STRUCTURE AND WILL BE CLASSIFIED AS USE GROUP "U" (UTILITY AND MISCELLANEOUS).

BUILDING HEIGHT AND AREA:
ALLOWABLE TABULAR AREA AND HEIGHT: 8,500 SF / 2 STORIES (55').
ACTUAL AREA AND HEIGHT: 785 SF / 1 STORY (12').

FIRE RESISTANCE RATING REQUIREMENTS:
BUILDING ELEMENTS = 0 RATING
EXTERIOR WALLS BASED ON FIRE SEPARATION DISTANCE = 0 RATING
AS SEPARATION IS GREATER THAN 10 FEET.

OCCUPANT LOAD:
230 SF/50 SF (LOCKER ROOM) = 5 PEOPLE EACH RESTROOM.

ONE MEANS OF EGRESS PER SPACE ALLOWED - LESS THAN 49 PEOPLE.

FACILITY WILL COMPLY WITH OBC CHAPTER 11 AND ICC A117.1-2009, ACCESSIBILITY AND USABLE BUILDINGS AND FACILITIES AS AMENDED BY OBC SECTION 1112.

GENERAL NOTES

A. FINISH FLOOR ELEVATION SHALL BE 100'-0" (USGS 848.50') UNLESS NOTED OTHERWISE.
B. SEE SITE DRAWINGS FOR EXTENT OF CONCRETE WALKS, COLORS, AND PATTERNS.
C. DIMENSIONS SHOWN ARE TO THE FACE OF WALL OR MASONRY OPENING. TYPICAL UNLESS NOTED OTHERWISE.
D. PROVIDE SEALANT AT JOINTS BETWEEN DISSIMILAR MATERIALS.
E. RUN ELECTRICAL CONDUITS, AND SIMILAR ROUGH-IN COMPONENTS, IN CONCEALED LOCATIONS TO THE GREATEST EXTENT POSSIBLE. WHERE EXPOSED TO VIEW, INSTALL CONDUIT LEVEL, PLUMB, AND PERPENDICULAR OR PARALLEL TO BUILDING STRUCTURE AND COMPONENTS. SUPPORT AND ATTACH CONDUIT PER APPLICABLE CODES AND REGULATIONS, BUT NOT LESS THAN EVERY TEN (10) FEET. PAINT ALL CONDUIT AND BOXES EXPOSED TO VIEW. SEE ELECTRICAL DRAWINGS FOR ADDITIONAL INFORMATION.
F. PROVIDE 4'-0" X 4'-0" MOCKUP OF TEXTURED AND COLORED CONCRETE WING WALLS. APPLY FORM LINER TO BOTH SIDES OF MOCK UP.

△
CJ = CONTROL JOINT IN CMU WALL

KEYNOTES

0.1 EDGE OF WALL ABOVE.

3.2 INTEGRAL COLOR CONCRETE WALL WITH WOOD PATTERN FINISH ON ALL EXPOSED VERTICAL SURFACES.
FORM LINER BASIS OF DESIGN: FITZGERALD 8" WEATHERED PLANK, PATTERN #16939.
COLOR: AS SELECTED BY ARCHITECT WITH SURFACE APPLIED SEALER/HARDENER.
3.3 CONCRETE FOUNDATION. SEE STRUCTURAL DRAWINGS.
3.4 EXPOSED AGGREGATE CONCRETE PAVING - SEE SITE PLANS.
3.6 CONCRETE ROOF CURB.
3.8 CONCRETE WALL WITH INTEGRAL COLOR ON EXPOSED "EXTERIOR" VERTICAL SURFACES. SLOPE TOP EDGE AS SHOWN ON SECTIONS.
COLOR: AS SELECTED BY ARCHITECT

4.1 8" (NOM.) STANDARD CONCRETE MASONRY UNIT. SEE STRUCTURAL DRAWINGS FOR VERTICAL REINFORCEMENT. CONTROL JOINTS SHOWN ON FLOOR PLAN. PROVIDE FOAM-IN-PLACE INSULATION IN EXTERIOR WALLS.
4.3 ±2" STONE VENEER OVER CONCRETE OR CMU WALL.
4.4 CAST STONE SEAT WALL WITH 1" CHAMFERED CORNER EACH END.
4.5 CAST STONE WALL CAP, ADHESIVE ANCHOR TO TOP OF CONCRETE WALL.

6.4 3/4" PLYWOOD EQUIPMENT BOARD FOR POWER SUPPLY AND ACCESS CONTROL PANEL. COORDINATE SPACE REQUIREMENTS.

7.1 INTENSIVE VEGETATED GREEN ROOF SYSTEM.
7.9 THROUGH-WALL SCUPPER.
7.10 STAINLESS STEEL PERFORATED METAL EDGE RESTRAINT.
7.11 VEGETATION-FREE ZONE AROUND ROOF DRAIN. PROVIDE APPROPRIATE SURFACING STONE OR PAVER BALLAST.
7.12 PROVIDE JOINT SEALANT BOTH SIDES OF WALL.

8.2 TUBULAR DAYLIGHTING SYSTEM.
8.3 JUNCTION BOX AND CONDUIT FOR ACCESS CONTROL READER.

22.1 FLOOR DRAIN. SEE PLUMBING DRAWINGS.
22.2 DRINKING FOUNTAIN. SEE PLUMBING DRAWINGS.
22.3 FLOOR MOUNTED MOP SINK. SEE PLUMBING DRAWINGS.
22.4 ROOF DRAIN. SEE PLUMBING DRAWINGS.
22.5 WATER HEATER ON PLATFORM ASSEMBLY SUSPENDED FROM CEILING. SEE PLUMBING DRAWINGS.
22.6 PLUMBING VENT. COORDINATE WITH PLUMBING DRAWINGS.

23.2 8"X16" GRILL/LOUVER. SEE MECHANICAL DRAWINGS.
23.3 EXHAUST THROUGH ROOF. SEE MECHANICAL DRAWINGS.

26.1 EXTERIOR LIGHT FIXTURE WITH MOTION SENSOR. SEE ELECTRICAL DRAWINGS.

CT Consultants
engineers | architects | planners
Northwoods I Building - 7965 N. High Street - Suite 240, Columbus, Ohio 43235
Phone: 614.885.1700 - Fax: 614.885.1791 - www.ctconsultants.com

NO.	REVISION	DATE
01	UPDATED CODE REFERENCES AND ADJUSTED A KEYNOTE	11-08-16

• AS NOTED	
DATE:	11/04/16
DESIGNED BY:	CKNI
DRAWN BY:	ARJW
CHECKED BY:	BSAB

HOLDER WRIGHT PARK
VISITOR ORIENTATION CENTER
4729 BRIGHT RD, DUBLIN OH 43017

PLANS AND DETAILS

STATE OF OHIO
12-21-16
CHAD R. KNIGHT
1215656
REGISTERED ARCHITECT

PROJECT NO:	
14626	
A1	
SHEET	OF
1	2

\\CW-FS1\CTC LOCAL\CW-VOL1\2014\14626\DWG\14626 A SHEETS.DWG - 11/15/2016 9:43:45 AM - ABRAMS

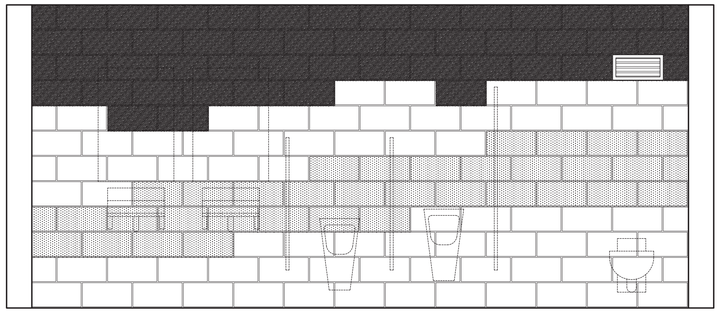

ELEVATION A

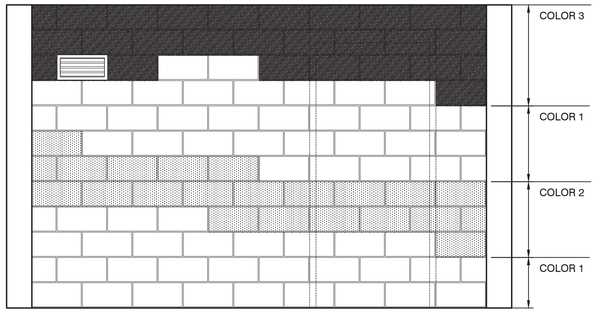

ELEVATION B

GROUND FACE MASONRY COLORS:
BASIS OF DESIGN - YORK BUILDING PRODUCTS
COLOR 1 = SAHARA
COLOR 2 = PORT
COLOR 3 = GINGERBREAD
U.N.O. , C.M.U. TO BE COLOR 1.

INTERIOR ELEVATIONS

6 / A2 — SCALE: 1/2" = 1'-0" — MASONRY PATTERN LAYOUT

KEYNOTES

2.1 4" PERFORATED FOUNDATION DRAIN WRAPPED WITH FILTER FABRIC. COORDINATE CONNECTION TO STORM.

3.0 CONCRETE SIDEWALK. SEE CIVIL DRAWINGS.
3.1 CONCRETE SLAB ON GRADE, OVER COMPACTED GRANULAR BASE. SEE STRUCTURAL DRAWINGS.
3.2 CONCRETE WALL WITH WOOD PATTERN FINISH ON ALL EXPOSED VERTICAL SURFACES.
3.3 CONCRETE FOUNDATION. SEE STRUCTURAL DRAWINGS.
3.5 CONCRETE ROOF SLAB, SEE STRUCTURAL DRAWINGS.
3.6 CONCRETE ROOF CURB.
3.7 10 MIL POLYETHYLENE BOND BREAKER (OR APPROVED EQUAL).
1 3.8 CONCRETE WALL WITH INTEGRAL COLOR ON EXPOSED "EXTERIOR" VERTICAL SURFACES. SLOPE TOP EDGE AS SHOWN ON SECTIONS.
COLOR: AS SELECTED BY ARCHITECT
4.1 8" (NOM.) GROUND FACE CONCRETE MASONRY UNIT - COLOR 1 (U.N.O.). SEE INTERIOR ELEVATIONS FOR COLOR LAYOUT ON WALLS. SEE STRUCTURAL DRAWINGS FOR VERTICAL REINFORCEMENT. PROVIDE FOAM-IN-PLACE INSULATION IN EXTERIOR WALLS.
4.3 4" STONE VENEER OVER CONCRETE WALL.
4.4 CAST STONE SEAT WALL WITH 1" CHAMFERED CORNER EACH END.
4.5 CAST STONE WALL CAP, ADHESIVE ANCHOR TO TOP OF CONCRETE WALL.

6.1 2X PRESSURE TREATED BLOCKING.
6.2 2X6 PRESSURE TREATED FRAMING.
6.3 3/4" EXTERIOR GRADE WOOD SHEATHING.

7.1 INTENSIVE VEGETATED GREEN ROOF SYSTEM.
7.2 1/2" EXPANSION JOINT FILLER MATERIAL AND JOINT SEALANT.
7.3 TPO ADHERED ROOF MEMBRANE.
7.4 REGLET.
7.5 SEALANT AND SHEET METAL COUNTER FLASHING.
7.6 FLUID-APPLIED WATERPROOFING.
7.7 RIGID INSULATION - 3" BASE LAYER OVER ROOF DECK WITH TAPERED INSULATION OVER TOP OF BASE LAYER AT 1/4" PER FOOT TO DRAIN.

8.1 HOLLOW METAL DOOR AND FRAME, PAINT.
8.2 TUBULAR DAYLIGHTING SYSTEM.

26.1 EXTERIOR LIGHT FIXTURE. SEE ELECTRICAL DRAWINGS.

32.1 EXTERIOR GRADE. SEE CIVIL DRAWINGS.

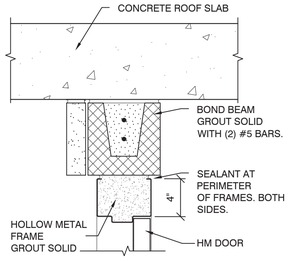

DOOR HEAD DETAIL

6 / A2 — SCALE: 1-1/2" = 1'-0"

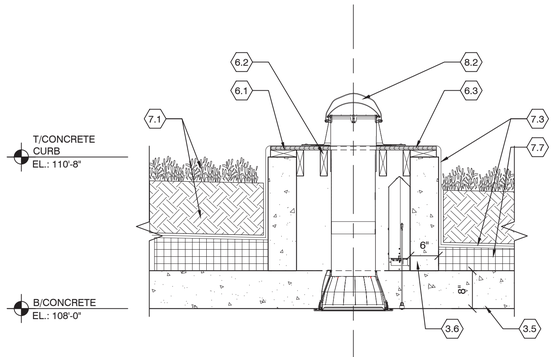

SECTION

5 / A2 — SCALE: 3/4" = 1'-0"

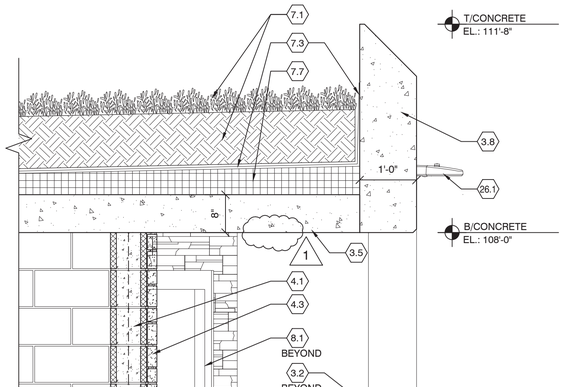

SECTION

2 / A2 — SCALE: 3/4" = 1'-0"

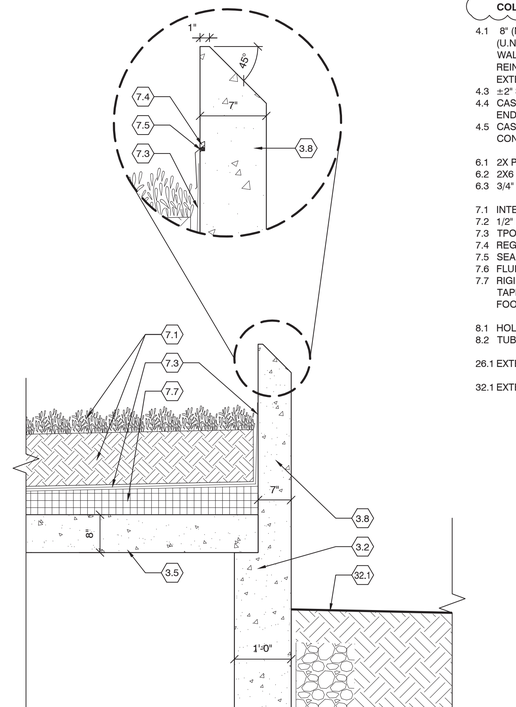

SECTION

1 / A2 — SCALE: 3/4" = 1'-0"

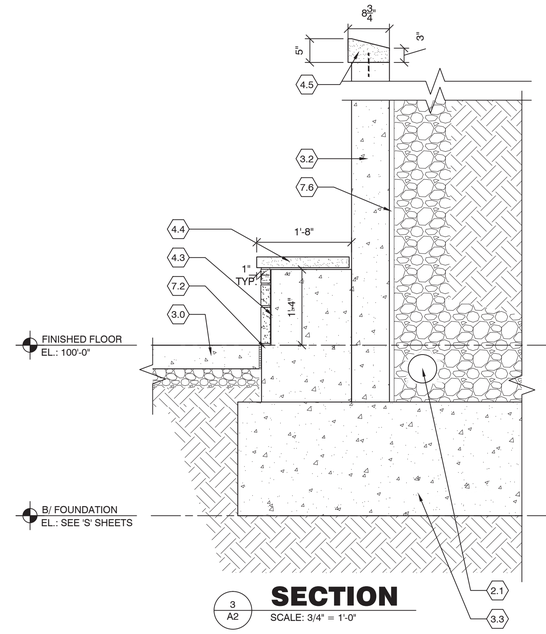

SECTION

3 / A2 — SCALE: 3/4" = 1'-0"

CT Consultants
engineers | architects | planners
Northwoods I Building - 7965 N. High Street - Suite 240, Columbus, Ohio 43235
Phone: 614.885.1700 - Fax: 614.885.1791 - www.ctconsultants.com

NO.	REVISION	DATE
01	REMOVED LOUVRE AT OVERHANG AND ADJUSTED A KEYNOTE	11-08-16

DRAWING SCALE: • AS NOTED
DATE: 11/04/16
DESIGNED BY: CKNI
DRAWN BY: ARLW
CHECKED BY: BSAB

HOLDER WRIGHT PARK
VISITOR ORIENTATION CENTER
4729 BRIGHT RD, DUBLIN OH 43017

SECTIONS AND DETAILS

PROJECT NO: 14626
A2
SHEET 2 OF 2

STATE OF OHIO — CHAD A. KNIGHT — 12-23-16 — 1215666 — REGISTERED ARCHITECT

\\DN--FS1.CTC.LOCAL\DN-VOL1_2014\14626\DWG\14626 A SHEETS.DWG — 11/15/2016 8:40:14 AM — ABRAMS

ELECTRICAL SYMBOL LEGEND

- DUPLEX RECEPTACLE, 20 A, 120 V, MOUNTED AT 18" AFF U.O.N.
  GFI – INDICATES GROUND FAULT INTERRUPTING TYPE
  WP – INDICATES WEATHER PROOF IN USE COVER
- DOUBLE DUPLEX RECEPTACLE, 20 A, 120 V, MOUNTED AT 18" AFF U.O.N.
- DUPLEX RECEPTACLE, 20 A, 120 V, CEILING MOUNTED
- SINGLE–POLE SWITCH, 20 A, 120/277 V RATED
- LOW VOLTAGE SENSOR OVERRIDE SWITCH, TO BE PROVIDED WITH THE OCCUPANCY SENSOR/ SWITCH PACK
- NON–FUSED DISCONNECT SWITCH
- FUSED DISCONNECT SWITCH
- ELECTRICAL PANEL
- DRY TYPE TRANSFORMER
- JUNCTION BOX
- CEILING MOUNTED OCCUPANCY SENSOR
- MOTION DETECTOR
- PHOTO CELL

KEYNOTES

1. JUNCTION BOX AND DEDICATED CIRCUIT FOR 120V HAND DRYER. VERIFY EXACT LOCATION WITH ARCHITECTURAL ELEVATIONS/ EQUIPMENT CUT SHEETS.
2. JUNCTION BOX, TOGGLE DISCONNECT SWITCH AND DEDICATED CIRCUIT FOR 120V EXHAUST FAN EF–1. PROVIDE A 12 MONTH, 24 HOUR, ASTRONOMICAL TIMECLOCK FOR FAN CONTROL IN NEMA 1 ENCLOSURE, AS MANUFACTURED BY TORK, INTERMATIC OR EQUAL. MOUNT TIMECLOCK NEXT TO PANEL LP.
3. JUNCTION BOX, TOGGLE DISCONNECT SWITCH AND DEDICATED CIRCUIT FOR 120V ELECTRIC WATER HEATER.
4. PROVIDE EACH OUTLET WITH A SPRING LOADED COVER WITH A NEOPRENE GASKET.
5. WIRE EACH RESTROOM LIGHTING THROUGH THE SWITCH–PACK, CONTROLLED BY THE CEILING MOUNTED OCCUPANCY SENSOR. AHOMC–P–0450–R BY COOPER OR EQUAL. PROVIDE SENSOR WITH MATCHING SWITCH–PACK.
6. PHOTOCELL PROVIDED WITH THE LIGHT FIXTURE.
7. 240V HEATER. SEE MECHANICAL PLANS FOR ADDITIONAL INFO. PROVIDE (2) #10 & (1) #12 GND TO PANEL LP. PROVIDE CIRCUIT BREAKER WITH LOCK–OUT PROVISION.
8. JUNCTION BOX AND 3/4" CONDUIT TO SECURITY BACKBOARD FOR CARD READER. VERIFY REQUIREMENTS WITH THE SECURITY SYSTEM VENDOR.
9. JUNCTION BOX AND 3/4" CONDUIT TO SECURITY BACKBOARD FOR DOOR STRIKES. VERIFY REQUIREMENTS WITH THE SECURITY SYSTEM VENDOR.
10. 3/4"X2'X3' PLYWOOD BACKBOARD AND TWO POWER OUTLETS FOR SECURITY EQUIPMENT BOARD. VERIFY REQUIREMENTS WITH THE SECURITY SYSTEM VENDOR

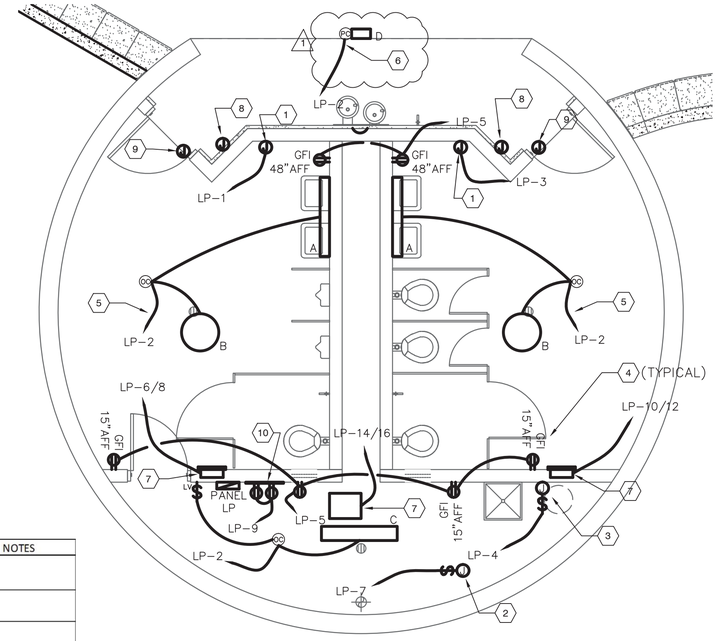

ELECTRICAL PLAN

SCALE: 1/4" = 1'-0"

NORTH

LIGHT FIXTURE SCHEDULE

DESIGNATION	DESCRIPTION	MANUFACTURER/MODEL	NOTES
A	VANDAL RESISTANT, CORNER MOUNT FLOURESCENT FIXTURE	LITHONIA VDC-1-32-120-GEB10IS OR EQUAL	
B	LED FIXTURE INTEGRAL TO SOLA-TUBE DAYLIGHTING MODULE	SEE ARCHITECTURAL SOLA-TUBE SPECIFICATIONS	
C	LED WRAP-AROUND FIXTURE, SURFACE MOUNTED	LITHONIA SBL4 LP835 OR EQUAL	
D	OUTDOOR LED WALL SCONCE	LITHONIA OLW 31	

PANELBOARD SCHEDULE

Panelboard	"LP"		Voltage	120/240V		Phase	1
Panel Type	NQOD		OCPD	100A M.C.B.		Wire	3
NEMA Type	12		Mounting	SURFACE		Buss	100A

Ckt. No.	DES	Load Description	Brkr. Size *	Phase	Brkr. Size *	Load Description	DES	Ckt. No.
1		HAND DRYER M	20/1	A	20/1	LIGHTS		2
3		HAND DRYER F	20/1	B	20/1	WATER HEATER		4
5		RECEPTACLES	20/1	A	30/2	EWH-1	LO	6
7		EXHAUST FAN	20/1	B				8
9		SECURITY SYSTEM	20/1	A	30/2	EWH-2	LO	10
11		SPARE	20/1	B				12
13		SPARE	20/1	A	20/2	CH-1	LO	14
15		SPARE	20/1	B				16

RESTROOM ELECTRICAL LOAD SUMMARY		
Load Type	Connected VA	NEC Demand VA
Lighting	281	351
Receptacles	1080	1080
HVAC (el heat)	12000	12000
Misc	5028	5028
Total	**18389**	**18459**
		76.9A at 240V 1 Phase

ELECTRICAL SPECIFICATIONS

1. THE ELECTRICAL CONTRACTOR SHALL APPLY FOR AND SECURE ALL COSTS AND CHARGES FOR PERMITS, CONSTRUCTION, AND MISCELLANEOUS WORK ASSOCIATED WITH AND REQUIRED FOR THE COMPLETION OF THE PROJECT ELECTRICAL WORK.
2. THE ELECTRICAL CONTRACTOR SHALL ARRANGE FOR ALL INSPECTIONS OF ELECTRICAL WORK BY ALL INSPECTION AUTHORITIES HAVING JURISDICTION. COPIES OF INSPECTION REPORTS SHALL BE MADE AVAILABLE TO THE OWNER UPON REQUEST, AND THREE (3) COPIES OF THE APPROVED FINAL INSPECTION REPORT SHALL ACCOMPANY THE REQUEST FOR FINAL PAYMENT.
3. ALL WORK SHALL BE IN STRICT ACCORDANCE WITH THE LATEST EDITION OF THE NATIONAL ELECTRICAL CODE, OHIO BUILDING CODE, LOCAL CODES AND ORDINANCES WHERE APPLICABLE, AND REQUIREMENTS OF O.S.H.A.
4. ALL MATERIALS AND EQUIPMENT FURNISHED AND INSTALLED BY THE ELECTRICAL CONTRACTOR SHALL BE NEW, U.L. LISTED OR LABELED, AND CONFORM TO NEMA AND ANSI STANDARD WHERE APPLICABLE.
5. THE CONTRACTOR SHALL VISIT THE SITE AND FULLY FAMILIARIZE HIMSELF WITH ALL CONDITIONS WHICH AFFECT HIS WORK PRIOR TO BID. COORDINATE AND SCHEDULE WORK WITH OTHER TRADES TO ENSURE SATISFACTORY PERFORMANCE, AVOID DELAYS AND DUPLICATIONS AND MEET THE OWNER'S COMPLETION SCHEDULE FOR THE USE OF THE BUILDING.
6. ALL WORK SHALL BE INSTALLED BY WORKMEN FULLY SKILLED IN THE WORK TO BE PERFORMED. REPAIR OR REPLACE EXISTING EQUIPMENT OR PROPERTY OF THE OWNER DAMAGED BY ELECTRICAL TRADES WORKMEN.
7. THE ELECTRICAL CONTRACTOR SHALL GUARANTEE MATERIALS AND WORKMANSHIP PROVIDED BY HIM FOR A PERIOD OF ONE (1) YEAR FROM THE DATE OF OWNER'S FINAL ACCEPTANCE. REPAIR OR REPLACE ANY DEFECTIVE MATERIALS OR EQUIPMENT AT NO ADDITIONAL COST TO THE OWNER WITHIN THE GUARANTEE PERIOD.
8. ALL ELECTRICAL WIRING SHALL BE INSTALLED IN CONDUIT. CONDUIT SHALL BE EMT, INTERMEDIATE, OR RIGID GALVANIZED IN ACCORDANCE WITH AND AS PERMITTED BY THE NATIONAL ELECTRICAL CODE OR LOCAL/STATE CODES AS APPLICABLE. UNDERGROUND CONDUIT SHALL BE SCHEDULE 40 PVC, 1" MINIMUM.
9. FURNISH AND INSTALL PULL BOXES, JUNCTION, AND DEVICE BOXES OF SUITABLE CODE GAUGE AND SIZE. ALL TERMINATIONS IN IN–GROUND PULL BOXES SHALL BE LIQUID–TIGHT.
10. ELECTRICAL WIRES SHALL BE MINIMUM #12 AWG, COPPER, 600 V RATED. #14 AWG COPPER SHALL BE PERMISSIBLE FOR CONTROL CIRCUITRY. AMPACITY RATINGS SHALL BE BASED UPON 75°C RATINGS.
    A. #14, #12, AND #10 AWG CONDUCTORS SHALL BE "THHN/THWN".
    B. #8 AND LARGER SHALL BE STRANDED "THHN/THWN".
11. FLEXIBLE METAL CONDUIT INCLUDING LIQUIDTIGHT SHALL BE PERMITTED WHERE IN ACCORDANCE WITH NATIONAL ELECTRICAL CODE AND LOCAL CODE PROVISIONS. FLEXIBLE METAL CONDUIT SHALL CONTAIN A SEPARATE GROUNDING CONDUCTOR AND BE TERMINATED WITH APPROPRIATE FITTINGS.
12. THE DRAWINGS ARE DIAGRAMMATIC AND INTENDED TO DESCRIBE THE WORK REQUIRED. THE ELECTRICAL CONTRACTOR SHALL ACCURATELY FIELD MEASURE AND LAY OUT HIS WORK TO EFFECTIVELY ACHIEVE A STRUCTURALLY COORDINATED INSTALLATION WITH THE BUILDING LAYOUT AND OTHER TRADES.
13. COORDINATE ALL SERVICE ENTRANCE REQUIREMENTS WITH THE LOCAL ELECTRIC UTILITY COMPANY TO ENSURE COMPLIANCE TO UTILITY COMPANY REQUIREMENTS. PROVIDE A COMPLETE GROUNDING SYSTEM.
14. DISCONNECTION, RECONNECTION, AND RELOCATION OF EQUIPMENT SHALL BE COORDINATED SO AS TO CAUSE MINIMAL DISRUPTION OF SERVICE.
15. RECEPTACLES SHALL BE 20 A, 125 V AC RATED, HUBBELL #5362, LEVITON, PASS & SEYMOUR, OR APPROVED EQUAL EQUIPMENT.
16. DEVICE COVER PLATES SHALL BE STAINLESS STEEL OF A TYPE TO SUIT DEVICE. MULTIPLE GANGED PLATES SHALL BE USED WHERE DEVICES ARE ADJACENT TO EACH OTHER. WEATHERPROOF RECEPTACLES SHALL BE EQUIPPED WITH SPRING TYPE CAP COVER PLATES.
17. LIGHTING FIXTURES SHALL BE AS SCHEDULED ON THE DRAWINGS. INSTALLATION SHALL BE IN ACCORDANCE WITH THE MANUFACTURER'S INSTRUCTIONS AND IN ACCORDANCE WITH APPLICABLE PROVISIONS OF NATIONAL ELECTRICAL CODE ARTICLE 410.
18. ELECTRICAL DISTRIBUTION PANEL SHALL BE SURFACE MOUNTED DEAD FRONT, WITH A 100A BUS RATING AND A 100A MAIN CIRCUIT BREAKER, WITH CODE GAUGE BACKBOX, LOCKABLE HINGED DOOR, 120/240 V, 1ø, 3 WIRE WITH SEPARATE NEUTRAL AND GROUND BARS, U.L. LISTED AND CONFORMING TO NEMA STANDARDS, SUITABLE FOR USE AS SERVICE ENTRANCE EQUIPMENT. PANEL SHALL BE EQUIPPED WITH SINGLE POLE OR DOUBLE POLE BOLTED BRANCH CIRCUIT BREAKERS AS INDICATED. CIRCUIT BREAKERS SHALL BE RATED 10,000 A.I.C. SYMMETRICAL. PANELBOARDS SHAL BE SQUARE D "NQOD", OR APPROVED EQUAL EQUIPMENT. MULTI–POLE CIRCUIT BREAKERS SHALL BE COMMON TRIP.
19. PROVIDE TYPEWRITTEN PANELBOARD CIRCUIT DIRECTORY IN PANELBOARD DOOR IDENTIFYING ALL ACTIVE CIRCUITS AND SPARES. ACTIVE CIRCUITS SHALL DESIGNATE EQUIPMENT SERVED.
20. IDENTIFY PANELBOARDS AND USAGE OF PANELBOARD CIRCUIT BREAKERS WITH PLASTIC LAMINOID NAMEPLATES. NAMEPLATES SHALL INDICATE PANEL DESIGNATION, VOLTAGE, AND USE.
21. BALANCE ALL LOADS IN PANELBOARDS.

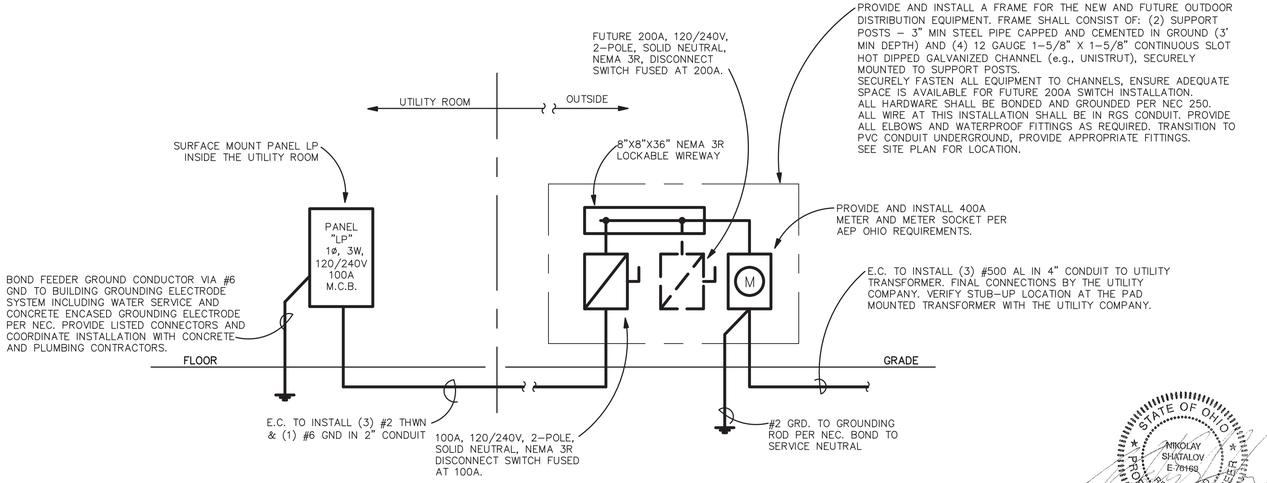

POWER RISER DIAGRAM

NTS

STATE OF OHIO
NIKOLAY SHATALOV
E-79169
REGISTERED PROFESSIONAL ENGINEER

CT Consultants
engineers | architects | planners
Northwoods I Building - 7065 N. High Street - Suite 240, Columbus, Ohio 43235
Phone: 614.885.1700 - Fax: 614.885.1791 - www.ctconsultants.com

NO.	REVISION	DATE
1	REVISION 1	11/7/16

DRAWING SCALE: AS NOTED
DATE: 11/1/16
DESIGNED BY: NSS
DRAWN BY: NSS
CHECKED BY: NSS

HOLDER WRIGHT PARK
VISITOR ORIENTATION CENTER
4729 BRIGHT RD, DUBLIN OH 43017

ELECTRICAL PLAN & DETAILS

PROJECT NO: 14626

E1

SHEET 1 OF 1

M:\2014\14626\DWG\ELE\ELECTRICAL.DWG – 11/8/2016 11:20:51 AM – SHATALOV

SECTION 033300 - ARCHITECTURAL CONCRETE

PART 1 - GENERAL

1.1 RELATED DOCUMENTS

A. Drawings and general provisions of the Contract, including General and Supplementary Conditions and Division 01 Specification Sections, apply to this Section.

1.2 SUMMARY

A. Section includes cast-in-place architectural concrete including form facings and integrally colored concrete materials.

B. Related Requirements:

1. Section 033000 "Cast in Place Concrete" for general requirements including reinforcement, accessories, concrete materials, concrete mixture design, placement procedures, and non-architectural concrete finishes.
2. Section 079200 "Joint Sealants" for elastomeric joint sealants in contraction and other joints in cast-in-place architectural concrete.

1.3 DEFINITIONS

A. Cast-in-Place Architectural Concrete: Formed concrete that is exposed to view on surfaces of completed structure or building and that requires special concrete materials, formwork, placement, or finishes to obtain specified architectural appearance.

B. Design Reference Sample: Sample designated by Architect in the Contract Documents that reflects acceptable surface quality and appearance of cast-in-place architectural concrete.

1.4 PREINSTALLATION MEETINGS

A. Preinstallation Conference: Conduct conference at Project site.

1. Before submitting design mixtures, review concrete design mixture and examine procedures for ensuring quality of concrete materials. Require representatives of each entity directly concerned with cast-in-place architectural concrete to attend, including the following:

a. Contractor's superintendent.
b. Independent testing agency responsible for concrete design mixtures.

c. Ready-mix concrete manufacturer.
d. Cast-in-place architectural concrete subcontractor.

2. Review concrete finishes and finishing, cold- and hot-weather concreting procedures, curing procedures, construction joints, forms and form-removal limitations, and protection of cast-in-place architectural concrete.

1.5 ACTION SUBMITTALS

A. Product Data: For each type of product.

B. Design Mixtures: For each concrete mixture. Submit alternate design mixtures when characteristics of materials, Project conditions, weather, test results, or other circumstances warrant adjustments.

1. Indicate amounts of mixing water to be withheld for later addition at Project site.

C. Formwork Shop Drawings: Show formwork construction including form-facing joints, rustications, construction and contraction joints, form joint-sealant details, form tie locations and patterns, inserts and embedments, cutouts, cleanout panels, and other items that visually affect cast-in-place architectural concrete.

D. Placement Schedule: Submit concrete placement schedule before start of placement operations. Include locations of all joints including construction joints.

E. Samples: For each of the following materials:

1. Form liners.

F. Samples for Verification: Architectural concrete Samples, cast vertically, approximately 18 by 18 by 2 inches (450 by 450 by 50 mm), of finishes, colors, and textures to match design reference sample. Include Sample sets showing the full range of variations expected in these characteristics.

1.6 INFORMATIONAL SUBMITTALS

A. Qualification Data: For manufacturer and testing agency.

B. Material Certificates: For each of the following:

1. Cementitious materials.
2. Admixtures.
3. Form materials and form-release agents.

C. Material Test Reports: For the following, by a qualified testing agency:

1. Aggregates. Include service record data indicating absence of deleterious expansion of concrete due to alkali-aggregate reactivity.

1.7 QUALITY ASSURANCE

A. Manufacturer Qualifications: A firm experienced in manufacturing ready-mixed concrete products and that complies with ASTM C 94/C 94M requirements for production facilities and equipment.

1. Manufacturer certified according to NRMCA's "NRMCA Quality Control Manual - Section 3, Certification of Ready Mixed Concrete Production Facilities."

B. Testing Agency Qualifications: Qualified according to ASTM C 1077 and ASTM E 329 for testing indicated.

C. Source Limitations for Cast-in-Place Architectural Concrete: Obtain each color, size, type, and variety of concrete material and concrete mixture from single manufacturer with resources to provide cast-in-place architectural concrete of consistent quality in appearance and physical properties.

D. ACI Publications: Comply with the following unless modified by requirements in the Contract Documents:

1. ACI 301, "Specification for Structural Concrete,"Sections 1 through 5 and Section 6, "Architectural Concrete."
2. ACI 303.1, "Specification for Cast-in-Place Architectural Concrete."

E. Mockups: Before casting architectural concrete, build mockups to verify selections made under Sample submittals and to demonstrate typical joints, surface finish, texture, tolerances, and standard of workmanship. Build mockups to comply with the following requirements, using materials indicated for the completed Work:

1. Build mockups in the location and of the size indicated or, if not indicated, as directed by Architect.
2. Build mockups of typical exterior wall of cast-in-place architectural concrete as shown on Drawings.
3. Demonstrate curing, cleaning, and protecting of cast-in-place architectural concrete, finishes, and contraction joints, as applicable.
4. In presence of Architect, damage part of the exposed-face surface for each finish, color, and texture, and demonstrate materials and techniques proposed for repair of tie holes and surface blemishes to match adjacent undamaged surfaces.
5. Obtain Architect's approval of mockups before casting architectural concrete.
6. Subject to compliance with requirements, approved mockups may become part of the completed Work if undisturbed at time of Substantial Completion.

PART 2 - PRODUCTS

2.1 FORM-FACING MATERIALS

A. General: Comply with Section 033000 "Cast-in-Place Concrete" for formwork and other form-facing material requirements.

B. Form-Facing Panels for As-Cast Finishes: Steel, glass-fiber-reinforced plastic, or other approved nonabsorptive panel materials that will provide continuous, true, and smooth architectural concrete surfaces. Furnish in largest practicable sizes to minimize number of joints.

C. Form Liners: Units of face design, texture, arrangement, and configuration to match basis of design product, Pattern #16939 - 8" Weathered Plank from Fitzgerald Formliners. Form liner is intended to impart a rustic board like finish. Furnish with manufacturer's recommended liquid-release agent that will not bond with, stain, or adversely affect concrete surfaces and will not impair subsequent surface treatments of concrete.

D. Form Joint Tape: Compressible foam tape; pressure sensitive; AAMA 800, "Specification 810.1, Expanded Cellular Glazing Tape"; minimum 1/4 inch (6 mm) thick.

E. Form Joint Sealant: Elastomeric sealant complying with ASTM C 920, Type M or Type S, Grade NS, that adheres to form joint substrates.

F. Sealer: Penetrating, clear, polyurethane wood form sealer formulated to reduce absorption of bleed water and prevent migration of set-retarding chemicals from wood.

G. Form-Release Agent: Commercially formulated, colorless form-release agent that will not bond with, stain, or adversely affect architectural concrete surfaces and will not impair subsequent treatments of those surfaces.

1. Formulate form-release agent with rust inhibitor for steel form-facing materials.

H. Form Ties: Factory-fabricated, glass-fiber-reinforced plastic, internally disconnecting, or removable ties designed to resist lateral pressure of fresh concrete on forms and to prevent spalling of concrete on removal.

1. Furnish internally disconnecting ties that will leave no metal closer than 1-1/2 inches (38 mm) from the architectural concrete surface.
2. Furnish ties with integral water-barrier plates to walls indicated to receive dampproofing or waterproofing.

2.2 STEEL REINFORCEMENT AND ACCESSORIES

A. General: Comply with Section 033000 "Cast-in-Place Concrete" for steel reinforcement and other requirements for reinforcement accessories.

2.3 CONCRETE MATERIALS

A. General: Comply with Section 033000 "Cast-in-Place Concrete" for concrete materials, mix designs, and curing requirements.

2.4 PIGMENT ADMIXTURES

A. Color Pigment: ASTM C 979, synthetic mineral-oxide pigments or colored water-reducing admixtures; color stable, free of carbon black, nonfading, and resistant to lime and other alkalis.

1. Manufacturers: Subject to compliance with requirements, provide products by one of the following:

    a. ChemMasters, Inc.
    b. Davis Colors.
    c. Dayton Superior.
    d. Hoover Color Corporation.
    e. Lambert Corporation.
    f. QC Construction Products.
    g. Rockwood Pigments NA, Inc.
    h. Scofield, L. M. Company.
    i. Solomon Colors, Inc.

2. Color: As selected by Architect from manufacturer's full range.

PART 3 - EXECUTION

3.1 FORMWORK

A. General: Comply with Section 033000 "Cast-in-Place Concrete" for formwork, embedded items, and shoring and reshoring.

B. Limit deflection of form-facing panels to not exceed ACI 303.1 requirements.

C. In addition to ACI 303.1 limits on form-facing panel deflection, limit cast-in-place architectural concrete surface irregularities, designated by ACI 347 as abrupt or gradual, as follows:

1. Class B, 1/4 inch (6 mm).

D. Fabricate forms to result in cast-in-place architectural concrete that complies with ACI 117, "Specifications for Tolerances for Concrete Construction and Materials."

E. Fabricate forms for easy removal without hammering or prying against concrete surfaces. Provide crush or wrecking plates where stripping may damage cast-in-place surfaces. Provide top forms for inclined surfaces steeper than 1.5 horizontal to 1 vertical. Kerf wood rustications, keyways, reglets, recesses, and the like, for easy removal.

1. Seal form joints and penetrations at form ties with form joint tape or form joint sealant to prevent cement paste leakage.
2. Do not use rust-stained steel form-facing material.

F. Provide temporary openings for cleanouts and inspection ports where interior area of formwork is inaccessible. Close openings with panels tightly fitted to forms and securely braced to prevent loss of concrete mortar. Locate temporary openings in forms at inconspicuous locations.

G. Chamfer exterior corners and edges of cast-in-place architectural concrete.

H. Form openings, chases, offsets, sinkages, keyways, reglets, blocking, screeds, and bulkheads required in the Work. Determine sizes and locations from trades providing such items.

I. Clean forms and adjacent surfaces to receive concrete. Remove chips, wood, sawdust, dirt, and other debris just before placing concrete.

J. Retighten forms and bracing before placing concrete, as required, to prevent mortar leaks and maintain proper alignment.

K. Coat contact surfaces of forms with form-release agent, according to manufacturer's written instructions, before placing reinforcement.

L. Place form liners accurately to provide finished surface texture indicated. Provide solid backing and attach securely to prevent deflection and maintain stability of liners during concreting. Prevent form liners from sagging and stretching in hot weather. Seal joints of form liners and form liner accessories to prevent mortar leaks. Coat form liner with form-release agent.

3.2 REINFORCEMENT AND INSERTS

A. General: Comply with Section 033000 "Cast-in-Place Concrete" for fabricating and installing steel reinforcement. Securely fasten steel reinforcement and wire ties against shifting during concrete placement.

B. Set wire ties with ends directed into concrete, not toward exposed concrete surfaces.

3.3 REMOVING AND REUSING FORMS

A. Formwork for sides of beams, walls, columns, and similar parts of the Work that does not support weight of concrete may be removed after cumulatively curing at not less than 50 deg F (10 deg C) for 24 hours after placing concrete if concrete is hard enough to not be damaged by form-removal operations and curing and protection operations are maintained.

1. Schedule form removal to maintain surface appearance that matches approved mockups.

B. Leave formwork for beam soffits, joists, slabs, and other structural elements that support weight of concrete in place until concrete has achieved 28-day design compressive strength. Remove forms only if shores have been arranged to permit removal of forms without loosening or disturbing shores.

C. Clean and repair surfaces of forms to be reused in the Work. Do not use split, frayed, delaminated, or otherwise damaged form-facing material. Apply new form-release agent.

D. When forms are reused, clean surfaces, remove fins and laitance, and tighten to close joints. Align and secure joints to avoid offsets. Do not use patched forms for cast-in-place architectural concrete surfaces.

3.4 JOINTS

A. Construction Joints: Install construction joints true to line with faces perpendicular to surface plane of cast-in-place architectural concrete so strength and appearance of concrete are not impaired, at locations indicated or as approved by Architect.

1. Place joints perpendicular to main reinforcement. Continue reinforcement across construction joints unless otherwise indicated.
2. Form keyed joints as indicated. Embed keys at least 1-1/2 inches (38 mm) into concrete. Align construction joint within rustications attached to form-facing material.
3. Space vertical joints in walls as indicated. Locate joints beside piers integral with walls, near corners, and in concealed locations where possible.

3.5 CONCRETE PLACEMENT

A. General: Comply with Section 033000 "Cast-in-Place Concrete" for concrete placement.

3.6 FINISHES, GENERAL

A. Architectural Concrete Finish: Match Architect's design reference sample and/or basis of design finish.

B. Maintain uniformity of special finishes over construction joints unless otherwise indicated.

3.7 FINISH SCHEDULE

A. Integrally colored concrete shall be used for all surfaces exposed to view for vertical walls, parapets, roof slab, and floor slab (only where indicated).

B. Utilize form liner to impart a rustic board like finish to all interior and exterior vertical surfaces exposed to view, except the inside face of parapet.

3.8 AS-CAST FORMED FINISHES

A. Smooth-Formed Finish: As-cast concrete texture imparted by form-facing material, arranged in an orderly and symmetrical manner with a minimum of seams. Remove fins and other projections exceeding specified limits on formed-surface irregularities. Repair and patch tie holes and defects.

B. Form-Liner Finish: Produce a textured surface free of pockets, streaks, and honeycombs, and of uniform appearance, color, and texture.

3.9 FIELD QUALITY CONTROL

A. General: Comply with field quality-control requirements in Section 033000 "Cast-in-Place Concrete."

3.10 REPAIRS, PROTECTION, AND CLEANING

A. Repair and cure damaged finished surfaces of cast-in-place architectural concrete when approved by Architect. Match repairs to color, texture, and uniformity of surrounding surfaces and to repairs on approved mockups.

1. Remove and replace cast-in-place architectural concrete that cannot be repaired and cured to Architect's approval.

B. Protect corners, edges, and surfaces of cast-in-place architectural concrete from damage; use guards and barricades.

C. Protect cast-in-place architectural concrete from staining, laitance, and contamination during remainder of construction period.

D. Clean cast-in-place architectural concrete surfaces after finish treatment to remove stains, markings, dust, and debris.

E. Wash and rinse surfaces according to concrete finish applicator's written instructions. Protect other Work from staining or damage due to cleaning operations.

1. Do not use cleaning materials or processes that could change the appearance of cast-in-place architectural concrete finishes.

END OF SECTION 033300