MARRIOTT HOTEL
CITY OF DUBLIN
FRANKLIN COUNTY, OHIO

GENERAL NOTES

1. City of Columbus and Ohio Department of Transportation Construction and Material Specifications, current editions, and any supplements thereto (hereafter referred to as Standard Specifications), shall govern all construction items unless otherwise noted. If a conflict between specifications is found, the more strict specification will apply as decided by the City Engineer. Item Numbers listed refer to City of Columbus Item Numbers unless otherwise noted.

2. The City Engineer will not be responsible for means, methods, procedures, techniques, or sequences of construction that are not specified herein. The City Engineer will not be responsible for safety on the work site, or for failure by the Contractor to perform work according to contract documents.

3. The Developer or Contractor shall be responsible to obtain all necessary permits including but not limited to Ohio EPA Permits to Install (PTI) and Notices of Intent (NOI), Building Permits, etc.

4. The Contractor shall notify the City of Dublin Division of Engineering in writing at least 3 working days prior to beginning construction.

5. The Contractor shall be solely responsible for complying with all federal, state and local safety requirements including the Occupational Safety and Health Act of 1970. The Contractor shall exercise precaution always for the protection of persons (including employees) and property. It shall also be the sole responsibility of the Contractor to initiate, maintain and supervise all safety requirements, precautions and programs in connection with the work, including the requirements for confined spaces per 29 CFR 1910.146.

6. Following completion of construction of the site improvements and before requesting occupancy, a proof survey shall be provided to the Division of Engineering that documents "as-built" elevations, dimensions, slopes and alignments of all elements of this project. The proof survey shall be prepared, signed and submitted by the Professional Engineer who sealed the constructions drawings.

7. The Contractor shall restrict construction activity to public right-of-way and areas defined as permanent and/or temporary construction easements, unless otherwise authorized by the City Engineer.

8. The Contractor shall carefully preserve benchmarks, property corners, reference points, stakes and other survey reference monuments or markers. In cases of willful or careless destruction, the Contractor shall be responsible for restorations. Resetting of markers shall be performed by an Ohio Professional Surveyor as approved by the City Engineer.

9. Non-rubber tired vehicles shall not be moved on or across public streets or highways without the written permission of the City Engineer.

10. The Contractor shall restore all disturbed areas to equal or better condition than existed before construction. Drainage ditches or watercourses that are disturbed by construction shall be restored to the grades and cross-sections that existed before construction.

11. Tracking or spilling mud, dirt or debris upon streets, residential or commercial drives, sidewalks or bike paths is prohibited according to Section 97.38 of the Dublin Code of Ordinances. Any such occurrence shall be cleaned up immediately by the Contractor at no cost to the City. If the Contractor fails to remove said mud, dirt, debris, or spillage, the City reserves the right to remove these materials and clean affected areas, the cost of which shall be the responsibility of the Contractor.

12. Disposal of excess excavation within Special Flood Hazard Areas (100-year floodplain) is not permitted.

13. All signs, landscaping, structures or other appurtenances within right-of-way disturbed or damaged during construction shall be replaced or repaired to the satisfaction of the City Engineer. The cost of this work shall be the responsibility of the Contractor.

14. All field tile broken or encountered during excavation shall be replaced or repaired and connected to the public storm sewer system as directed by the City Engineer. The cost of this work shall be the responsibility of the Contractor.

15. All precast concrete products shall be inspected at the location of manufacture. Approved precast concrete products will be stamped or have such identification noting that inspection has been conducted by the City of Columbus. Precast concrete products without proof of inspection shall not be approved for installation.

16. Backfill within a 1:1 influence line of existing structures (houses, garages, etc.) or public infrastructure (pavement, curbs, sidewalks, bike paths, etc.) shall be compacted granular backfill according to Item 912 of the Standard Specifications or Flowable CDF, Type III according to Item 636.1 Item 911 of the Standard Specifications shall be used elsewhere.

17. The Contractor shall submit a copy of the approved construction drawings and a list of proposed precast concrete product manufacturers to the City of Columbus Construction Inspection Division before commencing construction.

THE STANDARD SPECIFICATIONS OF THE STATE OF OHIO, DEPARTMENT OF TRANSPORTATION, INCLUDING CHANGES AND SUPPLEMENTAL SPECIFICATIONS LISTED IN THE PROPOSAL SHALL GOVERN THIS PROJECT UNLESS OTHERWISE SPECIFIED. WHEN IN CONFLICT, THE HAMILTON COUNTY REQUIREMENTS SHALL PREVAIL.

UTILITIES NOTIFICATION

AT LEAST TWO WORKING DAYS PRIOR TO COMMENCING CONSTRUCTION OPERATIONS IN AN AREA WHICH MAY INVOLVE UNDERGROUND UTILITY FACILITIES, THE CONTRACTOR SHALL NOTIFY THE ENGINEER, THE REGISTERED UTILITY PROTECTION SERVICE AND THE OWNERS OF EACH UNDERGROUND UTILITY FACILITY SHOWN ON THE PLAN.

THE OWNER OF THE UNDERGROUND FACILITY SHALL, WITHIN 48 HOURS (EXCLUDING SATURDAYS, SUNDAYS AND LEGAL HOLIDAYS), MARK THE LOCATION OF THE UNDERGROUND UTILITY FACILITIES IN THE CONSTRUCTION AREA IN SUCH A MANNER AS TO INDICATE THEIR COURSE AND THE APPROXIMATE DEPTH AT WHICH THEY WERE INSTALLED. THE MARKING OR LOCATING SHALL BE COORDINATED TO STAY APPROXIMATELY TWO DAYS AHEAD OF THE PLANNED CONSTRUCTION.

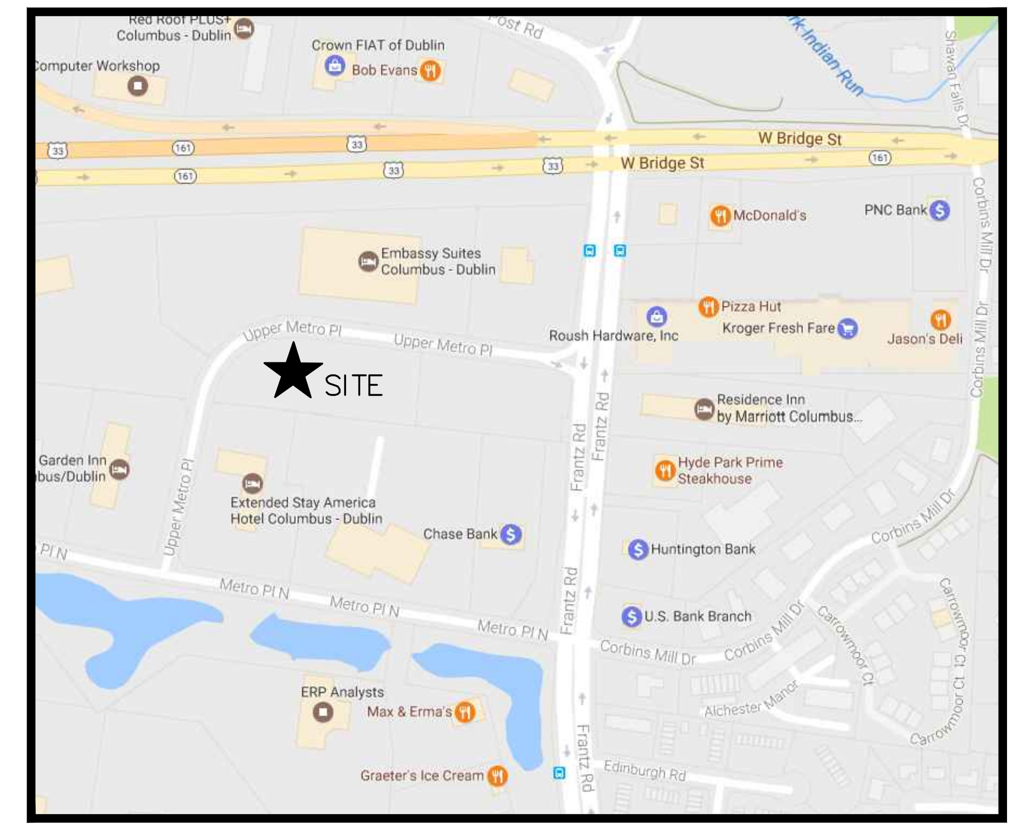

VICINITY MAP
N.T.S

INDEX

TITLE SHEET....................C100
BASEMAP & DEMOLITION PLAN....................C110
LOCATION PLAN....................C120
UTILITY PLAN....................C130
UTILITY PROFILES....................C131
GRADING PLAN....................C140
EROSION NOTES AND DETAILS....................C141
LANDSCAPE PLAN....................L100
LANDSCAPE PLAN DETAILS....................L200
SPECIFICATIONS & PLANTING DETAILS....................L300

ENGINEER
RVP ENGINEERING, LLC
6230 CENTRE PARK DRIVE, SUITE C
WEST CHESTER, OHIO 45069
(513) 823-2157

APPLICANT
STONEHENGE BUILDING GROUP
8825 CHAPEL SQUARE DRIVE, SUITE 100
CINCINNATI, OH 45249
(513) 266-7408

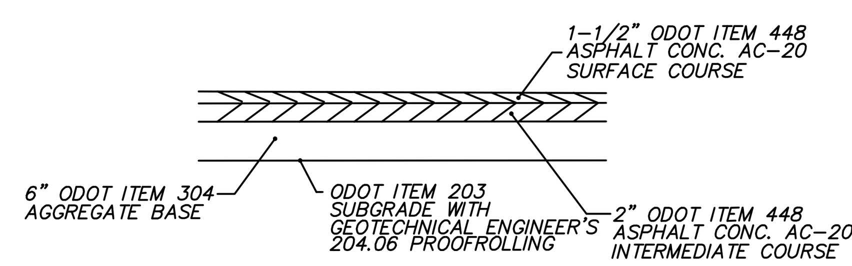

1 / C120 STANDARD ASPHALT PAVEMENT
N.T.S.

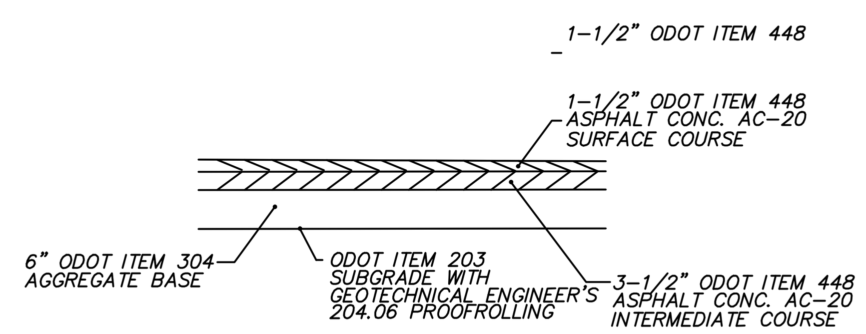

2 / C120 HEAVY DUTY ASPHALT PAVEMENT
N.T.S.

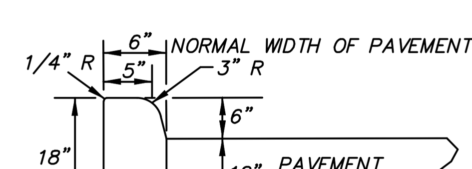

3 / C120 BARRIER CURB (ODOT TYPE 6)
N.T.S.

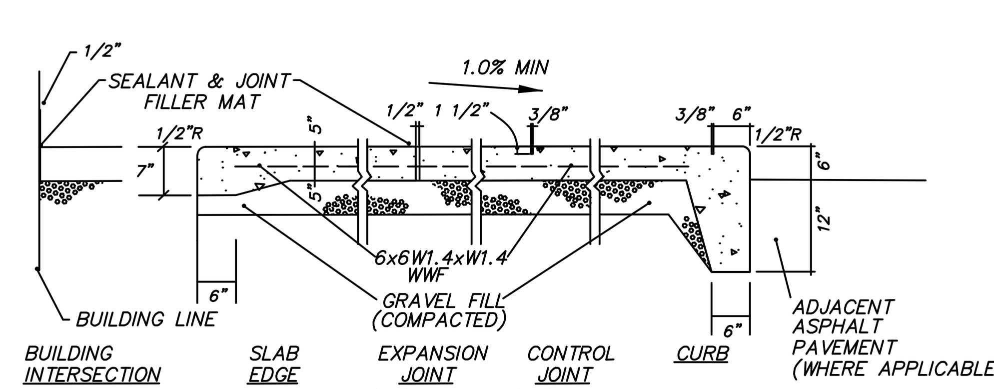

4 / C120 TYPICAL EXTERIOR CONCRETE SLAB WALK
N.T.S.

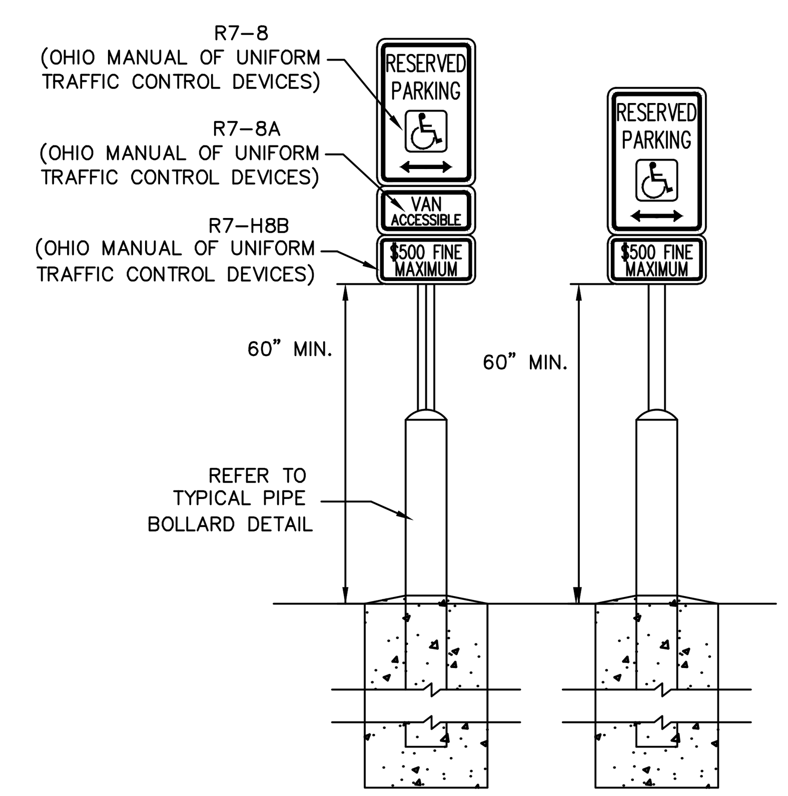

GENERAL NOTES:
1. U-TYPE FLANGED STEEL SIGN POST SET IN EARTH, IF OUTSIDE PAVEMENT EDGE, OR IN CONCRETE, IF WITHIN PAVEMENT, TO A MINIMUM DEPTH OF 3'-0".

R7-8 NOTES:
1. 12" X 18" X 16 GA. STEEL SIGN
2. GREEN LETTERING, BORDER, AND ARROW WITH WHITE BACKGROUND. WHITE HANDICAP SYMBOL IN BLUE BOX.

R7-8A NOTES:
1. 12" X 6" X 16 GA. STEEL SIGN
2. GREEN LETTERING AND BORDER WITH WHITE BACKGROUND.

R7-H8B NOTES:
1. 12" X 6" X 16 GA. STEEL SIGN
2. GREEN LETTERING AND BORDER WITH WHITE BACKGROUND.

NOTE: ONE PARKING SPACE MINIMUM SHALL BE DESIGNATED AS "VAN ACCESSIBLE". LOCATION AS NOTED ON THE DRAWINGS.

ONE SIGN TO BE INSTALLED AT EACH ACCESSIBLE PARKING SPACE

5 / C120 ACCESSIBLE PARKING SIGN DETAIL
N.T.S.

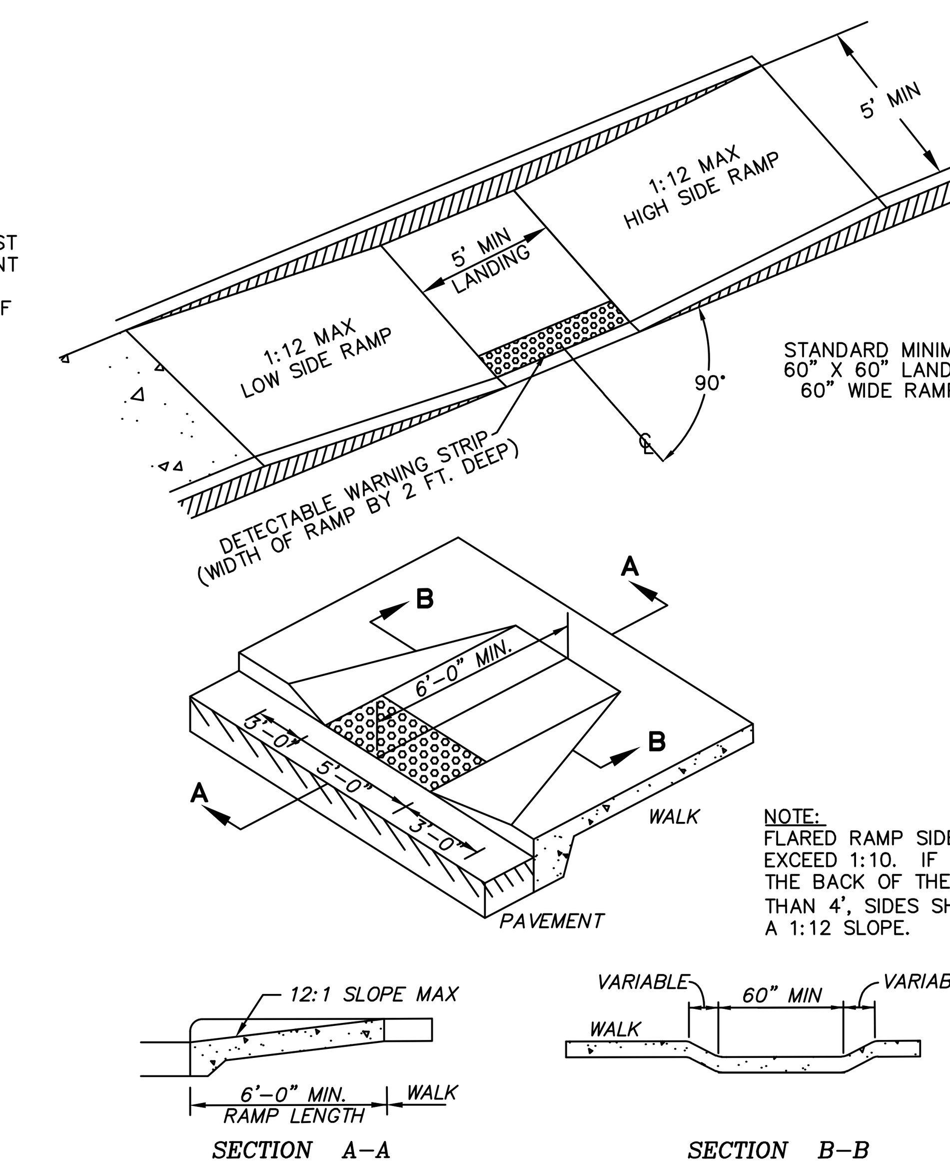

NOTE:
FLARED RAMP SIDES SHALL NOT EXCEED 1:10. IF THE DISTANCE TO THE BACK OF THE RAMP IS LESS THAN 4', SIDES SHALL NOT EXCEED A 1:12 SLOPE.

9 / C120 CURB RAMP DETAILS
N.T.S.

REVISIONS

TITLE SHEET

MARRIOTT HOTEL
LOT #4 UPPER METRO PLACE
CITY OF DUBLIN, FRANKLIN COUNTY, OHIO

SCALE: N.T.S
DATE: MAY 2, 2017
DRAWN: WCD
DESIGNED: SAD
CHECKED: RVP
XREF:
JOB NO.: 16061

STONEHENGE DUBLIN HOTEL

ELECTRONIC DATA FILES HAVE BEEN USED BY RVP ENGINEERING FOR THE SOLE PURPOSE OF GENERATING THIS PLAN DRAWING. THE APPROVED PLAN DRAWING REPRESENTS ACTUAL DESIGN INTENT IN CASE OF DISCREPANCIES BETWEEN ELECTRONIC DATA FILES AND THE APPROVED PLAN DRAWING. RVP ENGINEERING ASSUMES NO RESPONSIBILITY FOR ANY USE OR MANIPULATION OF ELECTRONIC DATA FILES BY OTHERS TO GENERATE BID PROPOSALS, PREPARE ESTIMATES, PERFORM CONSTRUCTION LAYOUT OR ANY OTHER USE. THE USE OR REUSE OF ELECTRONIC DATA FILES IS AT THE USER'S RISK AND FULL LEGAL RESPONSIBILITY.

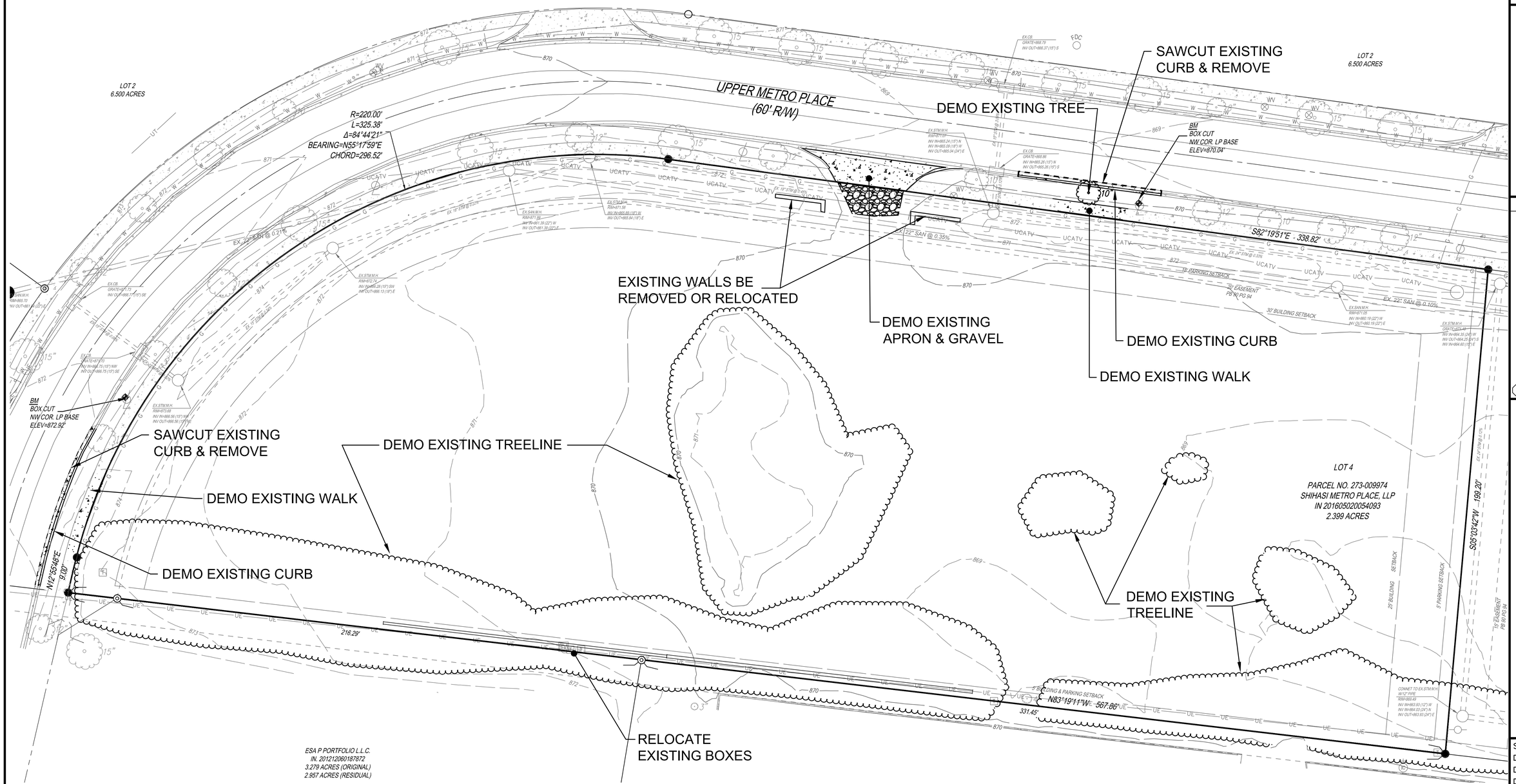

NOTE:
UNDERGROUND UTILITIES ARE PLOTTED FROM A COMPILATION OF AVAILABLE RECORD INFORMATION AND SURFACE INDICATIONS OF UNDERGROUND STRUCTURES AND MAY NOT BE INCLUSIVE. PRECISE LOCATIONS AND THE EXISTENCE OR NON EXISTENCE OF UNDERGROUND UTILITIES CANNOT BE VERIFIED. PLEASE NOTIFY THE OHIO UTILITY PROTECTION SERVICE AT 1-800-362-2764 BEFORE ANY PERIOD OF EXCAVATION OR CONSTRUCTION ACTIVITY.

OHIO Utilities Protection SERVICE
811 or 1-800-362-2764 Call Before You Dig

RVP ENGINEERING

REVISIONS

BASEMAP AND DEMOLITION PLAN
MARRIOTT HOTEL
LOT #4 UPPER METRO PLACE
CITY OF DUBLIN, FRANKLIN COUNTY, OHIO

SCALE: 1"=20'
DATE: MAY 2, 2017
DRAWN: WCD
DESIGNED: SAD
CHECKED: RVP
XREF:
JOB NO.: 16061

STONEHENGE DUBLIN HOTEL

Page
C110

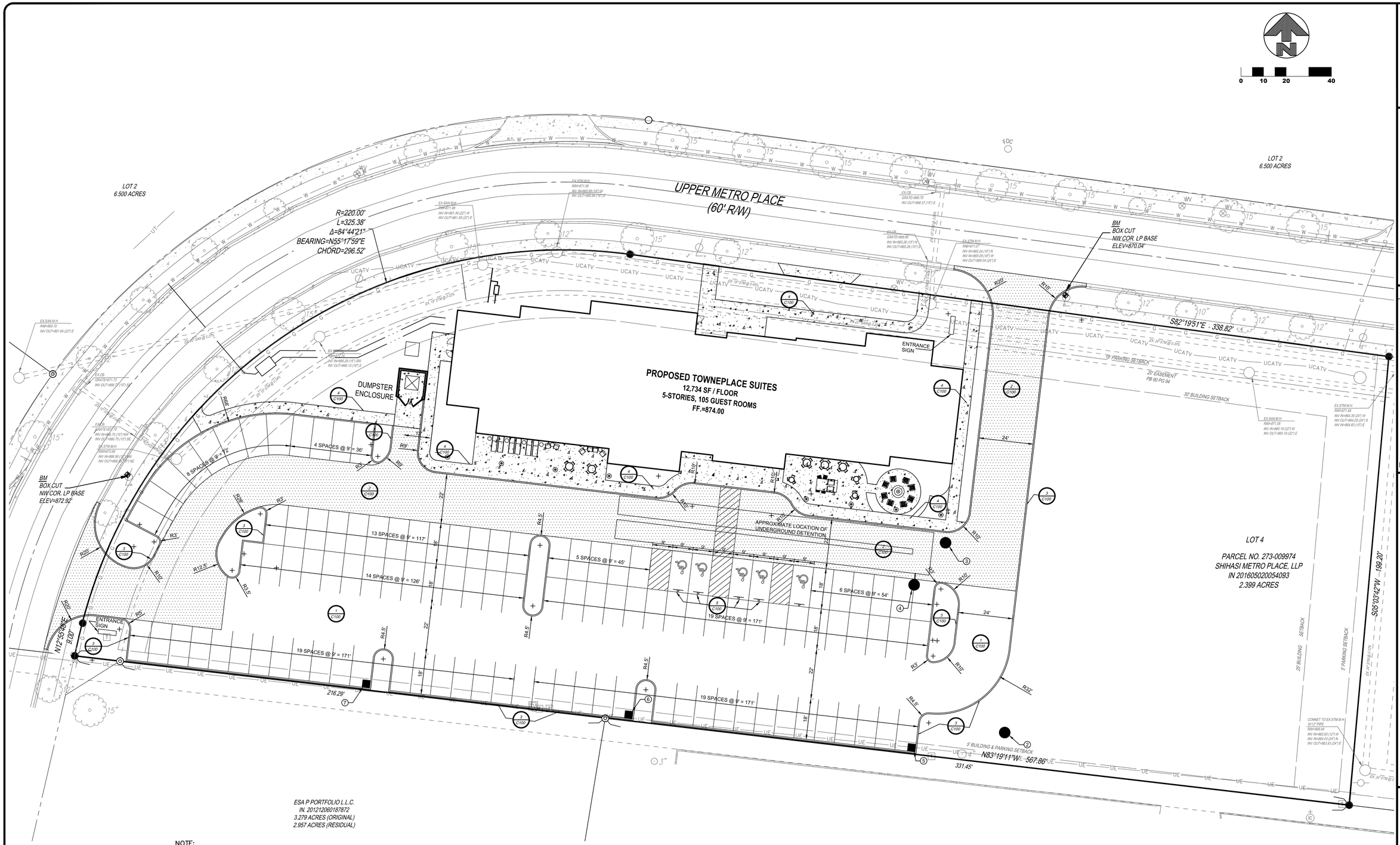

NOTE:
UNDERGROUND UTILITIES ARE PLOTTED FROM A COMPILATION OF AVAILABLE RECORD INFORMATION AND SURFACE INDICATIONS OF UNDERGROUND STRUCTURES AND MAY NOT BE INCLUSIVE. PRECISE LOCATIONS AND THE EXISTENCE OR NON EXISTENCE OF UNDERGROUND UTILITIES CANNOT BE VERIFIED. PLEASE NOTIFY THE OHIO UTILITY PROTECTION SERVICE AT 1-800-362-2764 BEFORE ANY PERIOD OF EXCAVATION OR CONSTRUCTION ACTIVITY.

OHIO Utilities Protection SERVICE
811 or 1-800-362-2764 Call Before You Dig

HEAVY DUTY ASPHALT

NOTE:
ALL DIMENSIONS ARE FACE OF CURB

RVP ENGINEERING

REVISIONS

LOCATION PLAN
MARRIOTT HOTEL
LOT #4 UPPER METRO PLACE
CITY OF DUBLIN, FRANKLIN COUNTY, OHIO

SCALE: 1"=20'
DATE: MAY 2, 2017
DRAWN: WCD
DESIGNED: SAD
CHECKED: RVP
XREF:
JOB NO.: 16061

STONEHENGE DUBLIN HOTEL

Page
C120

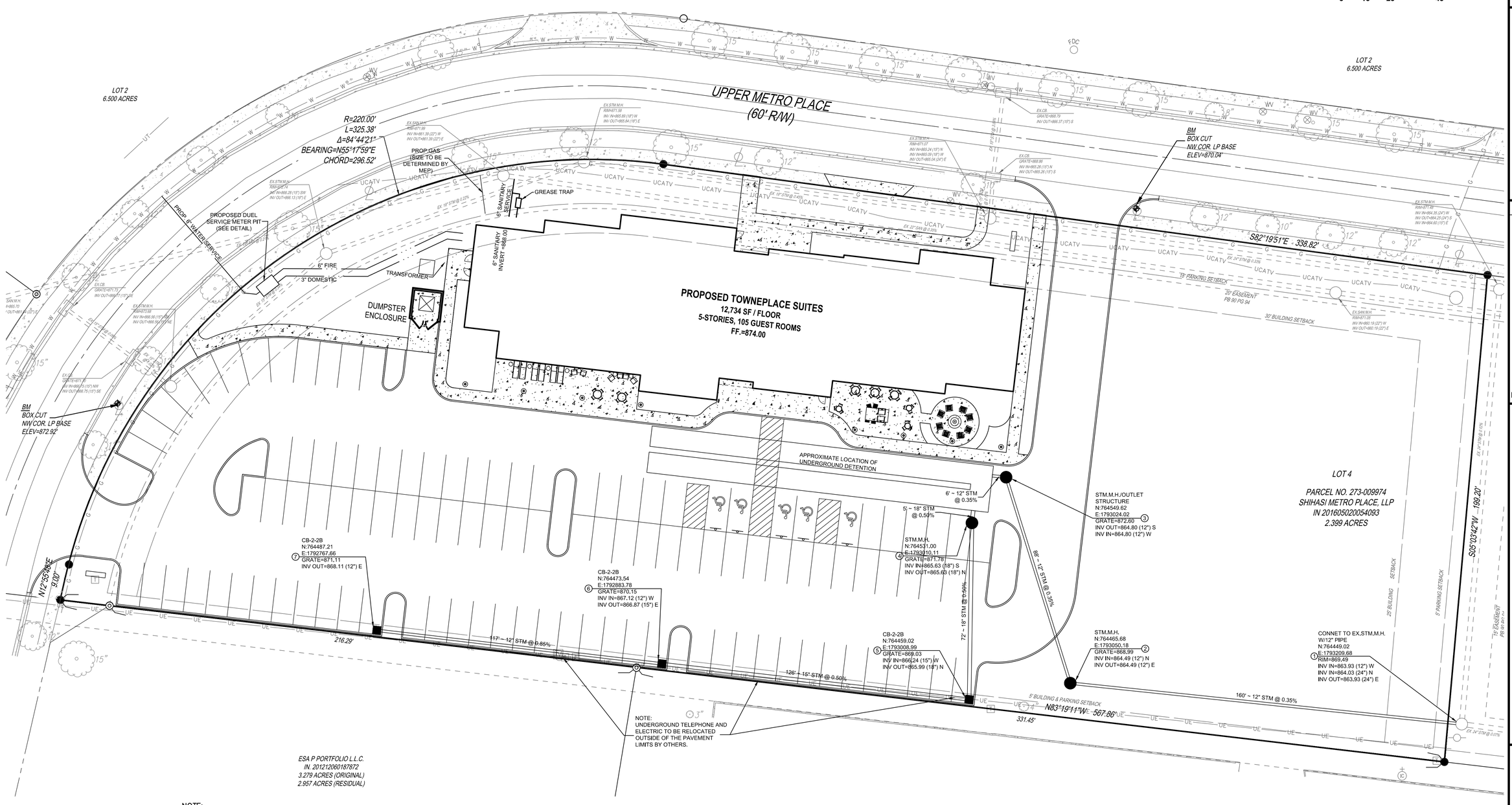

0 10 20 40

NOTE:
UNDERGROUND UTILITIES ARE PLOTTED FROM A COMPILATION OF AVAILABLE RECORD INFORMATION AND SURFACE INDICATIONS OF UNDERGROUND STRUCTURES AND MAY NOT BE INCLUSIVE. PRECISE LOCATIONS AND THE EXISTENCE OR NON EXISTENCE OF UNDERGROUND UTILITIES CANNOT BE VERIFIED. PLEASE NOTIFY THE OHIO UTILITY PROTECTION SERVICE AT 1-800-362-2764 BEFORE ANY PERIOD OF EXCAVATION OR CONSTRUCTION ACTIVITY.

OHIO Utilities Protection SERVICE
811 or 1-800-362-2764 Call Before You Dig

RVP ENGINEERING

REVISIONS

UTILITY PLAN
MARRIOTT HOTEL
LOT #4 UPPER METRO PLACE
CITY OF DUBLIN, FRANKLIN COUNTY, OHIO

SCALE: 1"=20'
DATE: MAY 2, 2017
DRAWN: WCD
DESIGNED: SAD
CHECKED: RVP
XREF:
JOB NO.: 16061

STONEHENGE DUBLIN HOTEL

Page
C130

ELECTRONIC DATA FILES, AS WELL AS ANY PRINTOUTS OR OTHER OUTPUT THEREOF, ARE INSTRUMENTS OF SERVICE PREPARED BY RVP ENGINEERING, INC. AND ARE THE PROPERTY OF RVP ENGINEERING, INC. THEY ARE NOT TO BE USED FOR ANY PURPOSE OTHER THAN THE SPECIFIC PROJECT FOR WHICH THEY WERE PREPARED, AND ARE NOT TO BE TRANSFERRED TO ANY OTHER PERSON OR ENTITY FOR USE ON ANY OTHER PROJECT OR EXTENSION OF THIS PROJECT, EXCEPT BY AGREEMENT IN WRITING AND WITH APPROPRIATE COMPENSATION TO RVP ENGINEERING, INC. ANY UNAUTHORIZED USE, REUSE, OR MODIFICATION OF ELECTRONIC DATA FILES OR PRINTOUTS OR OTHER OUTPUT THEREOF SHALL BE AT THE USER'S SOLE RISK AND WITHOUT LIABILITY TO RVP ENGINEERING, INC. BY APPROVING AND ACCEPTING ELECTRONIC DATA FILES OR PRINTOUTS OR OTHER OUTPUT THEREOF, THE USER OR RECIPIENT AGREES TO INDEMNIFY AND HOLD HARMLESS RVP ENGINEERING, INC. FROM ANY AND ALL CLAIMS, LIABILITIES, DAMAGES, LOSSES, AND EXPENSES ARISING OUT OF OR RESULTING THEREFROM.

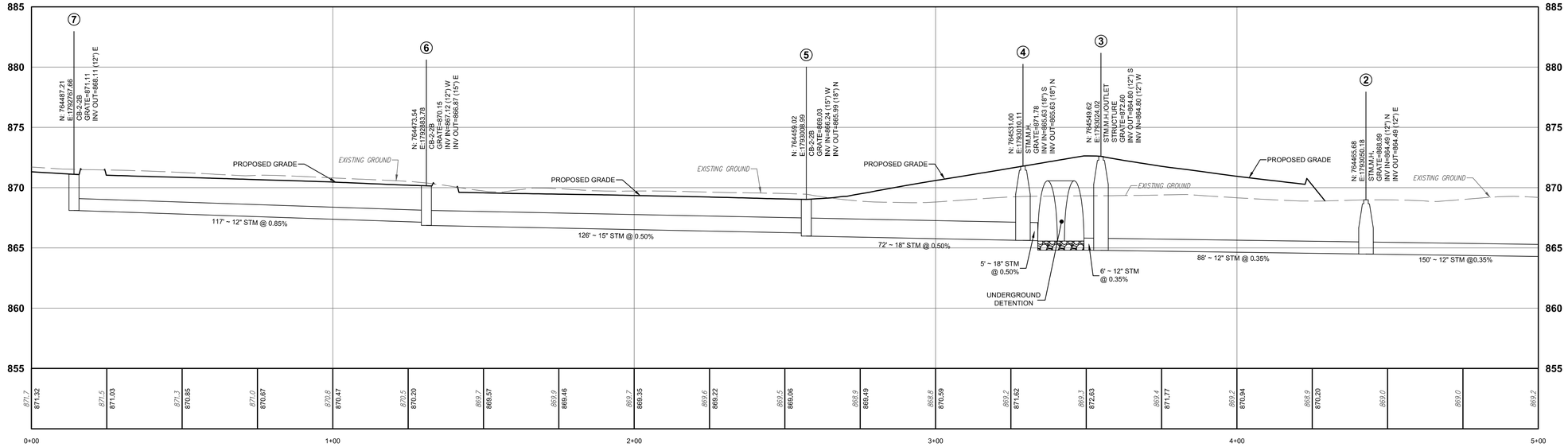

EX MH-1 TO CB-7 STA.0+00 TO STA.5+00

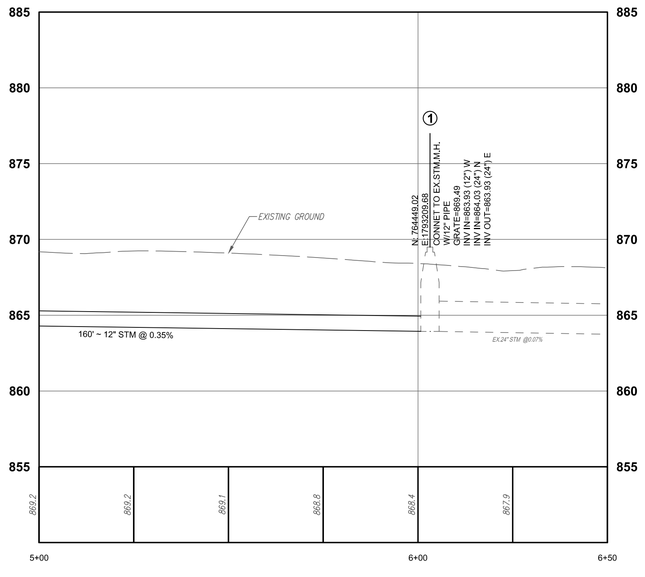

EX MH-1 TO CB-7 STA.5+00 TO STA.6+50

OHIO Utilities Protection SERVICE
811 or 1-800-362-2764
Call Before You Dig

NOTE:
UNDERGROUND UTILITIES ARE PLOTTED FROM A COMPILATION OF AVAILABLE RECORD INFORMATION AND SURFACE INDICATIONS OF UNDERGROUND STRUCTURES AND MAY NOT BE INCLUSIVE. PRECISE LOCATIONS AND THE EXISTENCE OR NON EXISTENCE OF UNDERGROUND UTILITIES CANNOT BE VERIFIED. PLEASE NOTIFY THE OHIO UTILITY PROTECTION SERVICE AT 1-800-362-2764 BEFORE ANY PERIOD OF EXCAVATION OR CONSTRUCTION ACTIVITY.

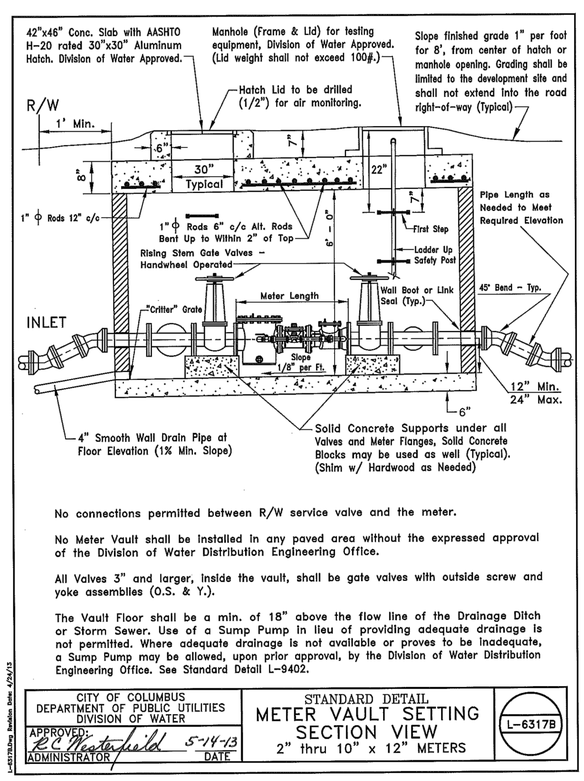

No connections permitted between R/W service valve and the meter.

No Meter Vault shall be installed in any paved area without the expressed approval of the Division of Water Distribution Engineering Office.

All Valves 3" and larger, inside the vault, shall be gate valves with outside screw and yoke assemblies (O.S. & Y.).

The Vault Floor shall be a min. of 18" above the flow line of the Drainage Ditch or Storm Sewer. Use of a Sump Pump in lieu of providing adequate drainage is not permitted. Where adequate drainage is not available or proves to be inadequate, a Sump Pump may be allowed, upon prior approval, by the Division of Water Distribution Engineering Office. See Standard Detail L-9402.

CITY OF COLUMBUS DEPARTMENT OF PUBLIC UTILITIES DIVISION OF WATER	STANDARD DETAIL METER VAULT SETTING SECTION VIEW 2" thru 10" x 12" METERS	L-6317B
APPROVED: RC Westenfeld 5-14-13 ADMINISTRATOR DATE		

L-6317Dwg Revision Date: 4/24/13

REVISIONS

UTILITY PROFILE
MARRIOTT HOTEL
LOT #4 UPPER METRO PLACE
CITY OF DUBLIN, FRANKLIN COUNTY, OHIO

SCALE: HOR:1"=20' VER:1"=5'
DATE: MAY 2, 2017
DRAWN: WCD
DESIGNED: SAD
CHECKED: RVP
XREF:
JOB NO.: 16061

STONEHENGE DUBLIN HOTEL

Page
C131

ELECTRONIC DATA FILES MADE AVAILABLE FOR USE BY CONTRACTORS ON THIS PROJECT ARE PROVIDED AS A CONVENIENCE TO CONTRACTORS. ANY REUSE OF ELECTRONIC DATA FILES FOR PURPOSES OTHER THAN THIS PROJECT, OR ANY ALTERATION OF ELECTRONIC DATA FILES WITHOUT THE EXPRESS WRITTEN CONSENT OF RVP ENGINEERING, SHALL BE AT USER'S SOLE RISK AND WITHOUT LIABILITY TO RVP ENGINEERING. ANY ALTERATION OF ELECTRONIC DATA FILES BY USER SHALL OBLITERATE ALL RVP ENGINEERING SEALS AND IDENTIFICATION. ELECTRONIC DATA FILES ARE NOT CONSTRUCTION DRAWINGS AND ARE NOT TO BE USED AS SUCH. ELECTRONIC DATA FILES ARE PROVIDED FOR INFORMATIONAL PURPOSES ONLY. RVP ENGINEERING SHALL NOT BE RESPONSIBLE FOR ANY MODIFICATIONS TO ELECTRONIC DATA FILES AFTER THEY HAVE BEEN SIGNED AND SEALED BY RVP ENGINEERING.

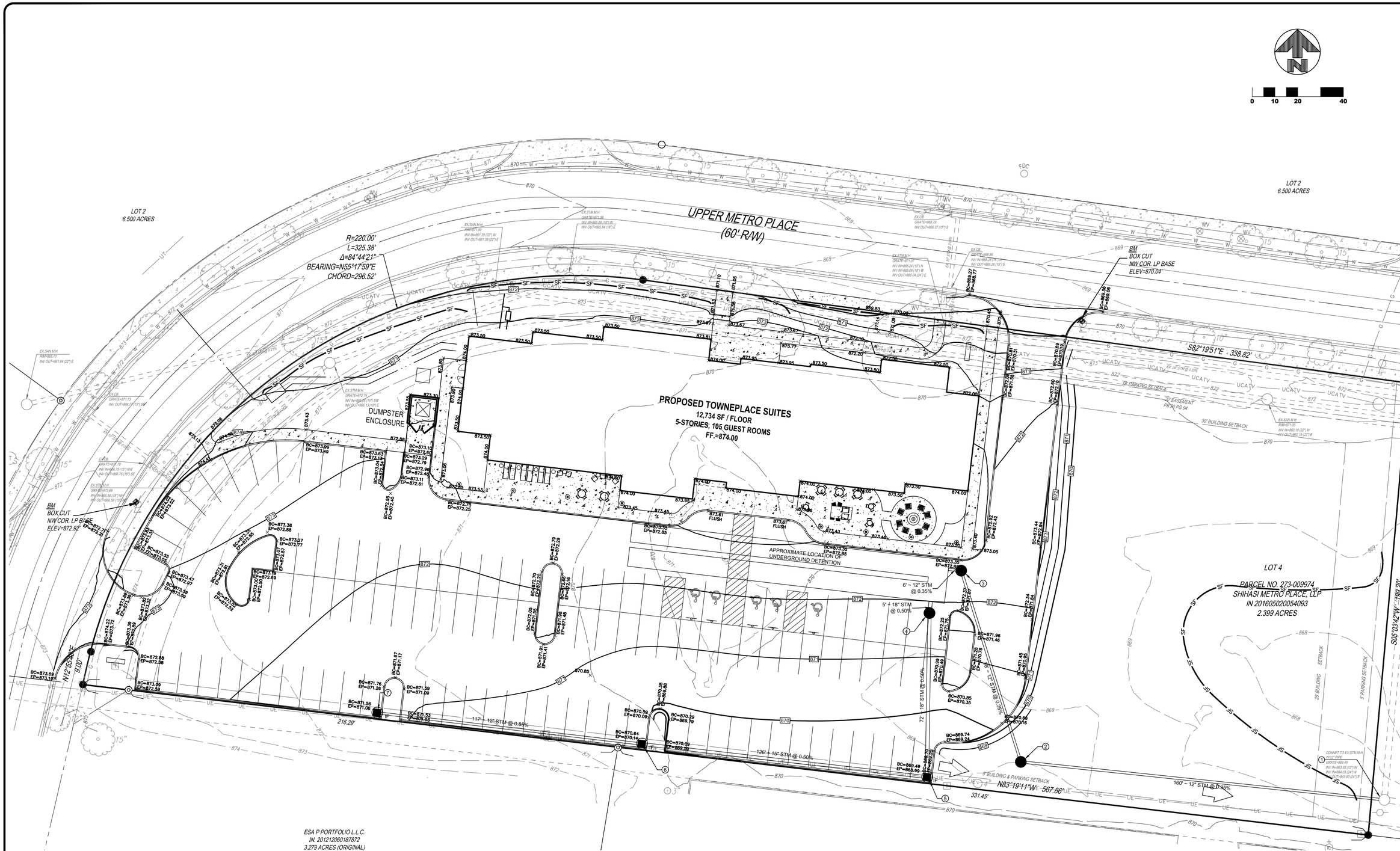

NOTE:
UNDERGROUND UTILITIES ARE PLOTTED FROM A COMPILATION OF AVAILABLE RECORD INFORMATION AND SURFACE INDICATIONS OF UNDERGROUND STRUCTURES AND MAY NOT BE INCLUSIVE. PRECISE LOCATIONS AND THE EXISTENCE OR NON EXISTENCE OF UNDERGROUND UTILITIES CANNOT BE VERIFIED. PLEASE NOTIFY THE OHIO UTILITY PROTECTION SERVICE AT 1-800-362-2764 BEFORE ANY PERIOD OF EXCAVATION OR CONSTRUCTION ACTIVITY.

OHIO Utilities Protection SERVICE
811 or 1-800-362-2764 Call Before You Dig

EROSION CONTROL LEGEND

- SF — SILT FENCE
- CD — CHECK DAM
- IF — INLET FILTER
- 100 YEAR DRAINAGE ROUTE

RVP ENGINEERING

REVISIONS

GRADING PLAN
MARRIOTT HOTEL
LOT #4 UPPER METRO PLACE
CITY OF DUBLIN, FRANKLIN COUNTY, OHIO

SCALE: 1"=20'
DATE: MAY 2, 2017
DRAWN: WCD
DESIGNED: SAD
CHECKED: RVP
XREF:
JOB NO.: 16061

STONEHENGE DUBLIN HOTEL

Page
C140

EROSION CONTROL NOTES:

1. DESCRIPTION OF CONSTRUCTION:

CONSTRUCTION OF A MULTI-LEVEL HOTEL. INSTALLATION OF PAVEMENT, STORM SEWER, AND OTHER UTILITIES

2. AREA AFFECTED BY CONSTRUCTION (GRADED AREA): APPROX. 2.39 ACRES

3. EXISTING SOIL DATA:

CrB	CROSBY SILT LOAM, SOUTHERN OHIO TILL PLAN, 2 TO 6 PERCENT SLOPES	86.2%
Ko	KOKOMO SILTY CLAY LOAM, 0 TO 2 PERCENT SLOPES	13.8%

4. RECEIVING WATERS:

UNNAMED TRIBUTARY TO THE COSGRAY DITCH.

5. POTENTIAL POLLUTION SOURCES:
- REMOVAL OF NATURAL PLANT COVER.
- CUT AND FILL AREAS EXPOSED TO EROSION AND RUNOFF PRIOR TO STABILIZATION.
- CHANGES IN VOLUME AND DURATION OF WATER CONCENTRATIONS CAUSED BY ALTERING STEEPNESS, DISTANCE AND SURFACE ROUGHNESS.
- PARKING SUBGRADE PRIOR TO PAVING.
- REDUCTION OF PERMEABILITY OF SOILS CAUSING ADDITIONAL RUNOFF DUE TO COMPACTION BY HEAVY EQUIPMENT.

6. CURVE NUMBERS:
PRE-DEVELOPMENT C VALUE = 0.40
POST CONSTRUCTION C VALUE = 0.90

7. PROJECT SCHEDULE:
BEGIN CONSTRUCTION: SUMMER 2017
END CONSTRUCTION: SPRING 2018

GENERAL CONSTRUCTION SEQUENCE *
A. INSTALL SEDIMENT CONTROL MEASURES
B. PRESERVE AND PROTECT EXISTING VEGETATION
C. INSTALL STORM WATER MANAGEMENT MEASURES
D. DEMOLITION ACTIVITES
E. CONSTRUCT SITE UTILITIES
F. GRADE SITE / STOCKPILE TOPSOIL
G. TEMPORARY VEGETATIVE STABILIZATION OF CONTROL MEASURES
H. VEGETATIVE COVER ON ALL AREAS TO BE EXPOSED LONGER THAN 45 DAYS
I. INSTALL ROAD AND PARKING SUBGRADE
J. SURFACE ROADS AND PARKING
K. PERMANENT VEGETATIVE STABILIZATION
L. HOURS OF OPPERATION ARE 7 DAYS A WEEK FROM 6 AM TO 9 PM

* TO BE FOLLOWED IN GENERAL ORDER FOR BEST MANAGEMENT PRACTICE, SOME INDIVIDUAL SITE CONSTRUCTION MAY NOT ALLOW FOR EXACT SEQUENCE.

8. CONTROL MEASURES FOR STORM WATER RUNOFF, EROSION AND SEDIMENT:

STABILIZATION OF DENUDED AREAS AND SOIL STOCKPILES

PERMANENT OR TEMPORARY SOIL STABILIZATION WILL BE APPLIED TO DENUDED AREAS WITHIN 7 DAYS AFTER FINAL GRADE IS REACHED ON ANY PORTION OF THE SITE. SOIL STABILIZATION WILL ALSO BE APPLIED TO DENUDED AREAS WHICH MAY NOT BE AT FINAL GRADE BUT WILL REMAIN UNDISTURBED FOR MORE THAN 45 DAYS. APPLICABLE PRACTICES INCLUDE VEGETATIVE ESTABLISHMENT, MULCHING, AND THE EARLY APPLICATION OF GRAVEL BASE ON AREAS TO BE PAVED. SOIL STABILIZATION MEASURES WILL BE SELECTED TO BE APPROPRIATE FOR THE TIME OF YEAR, SITE CONDITIONS, AND ESTIMATED DURATION OF USE. SOIL STOCKPILES WILL BE STABILIZED OR PROTECTED WITH SEDIMENT TRAPPING MEASURES TO PREVENT SOIL LOSS.

ESTABLISHMENT OF PERMANENT VEGETATION

A PERMANENT VEGETATIVE COVER WILL BE ESTABLISHED ON DENUDED AREAS NOT OTHERWISE PERMANENTLY STABILIZED. PERMANENT VEGETATION WILL NOT BE CONSIDERED ESTABLISHED UNTIL A GROUND COVER IS ACHIEVED WHICH IS MATURE ENOUGH TO CONTROL SOIL EROSION SATISFACTORILY AND TO SURVIVE SEVERE WEATHER CONDITIONS. (SEE VEGETATIVE PRACTICES – ITEM 10).

PROTECTION OF ADJACENT PROPERTIES

PROPERTIES ADJACENT TO THE SITE OF LAND DISTURBANCE WILL BE PROTECTED FROM SEDIMENT DEPOSITION. THIS WILL BE ACCOMPLISHED BY PRESERVING A WELL VEGETATED BUFFER STRIP AROUND THE LOWER PERIMETER OF LAND DISTURBANCE, BY INSTALLING PERIMETER CONTROLS SUCH AS SEDIMENT TRAPS, FILTERS OR DIKES, OR SEDIMENT BASINS, OR BY A COMBINATION OF SUCH MEASURES. VEGETATED FILTER STRIPS MAY BE USED ALONE ONLY WHERE RUNOFF IN SHEET FLOW IS EXPECTED. FILTER STRIPS SHOULD BE AT LEAST 15 FEET IN WIDTH. IF AT ANY TIME IT IS FOUND THAT A VEGETATED FILTER STRIP ALONE IS INEFFECTIVE IN STOPPING SEDIMENT MOVEMENT INTO ADJACENT PROPERTY, ADDITIONAL PERIMETER CONTROLS MUST BE PROVIDED.

TIMING AND STABILIZATION OF SEDIMENT TRAPPING MEASURES

SEDIMENT BASINS, DIVERSIONS, SEDIMENT TRAPS, AND OTHER MEASURES INTENDED TO TRAP SEDIMENT ON-SITE WILL BE CONSTRUCTED AS A FIRST STEP IN GRADING AND BE MADE FUNCTIONAL BEFORE UPSLOPE LAND DISTURBANCE TAKES PLACE. EARTHEN STRUCTURES SUCH AS DAMS, DIKES, AND DIVERSIONS WILL BE SEEDED AND MULCHED AFTER INSTALLATION.

SEDIMENT BASINS

STORMWATER RUNOFF CONTAINING DAMAGING AMOUNTS OF SEDIMENT SHALL PASS THROUGH A SEDIMENT BASIN OR OTHER SUITABLE SEDIMENT TRAPPING FACILITY.

CUT AND FILL SLOPES

CUT AND FILL SLOPES WILL BE DESIGNED AND CONSTRUCTED IN A MANNER WHICH WILL MINIMIZE EROSION. SLOPES WHICH ARE FOUND TO BE ERODING EXCESSIVELY WITHIN ONE YEAR OF CONSTRUCTION WILL BE PROVIDED WITH ADDITIONAL SLOPE STABILIZING MEASURES UNTIL THE PROBLEM IS CORRECTED.

STORMWATER MANAGEMENT

CONCENTRATED STORMWATER RUNOFF LEAVING THE SITE WILL BE DISCHARGED DIRECTLY INTO A WELL-DEFINED, ADEQUATELY-PROTECTED NATURAL OR MAN-MADE OFF SITE RECEIVING CHANNEL OR PIPE. IF NO OFF SITE CHANNEL OR PIPE EXISTS, THE STORMWATER WILL BE DETAINED ON SITE IN A SUITABLE RETENTION/DETENTION FACILITY.

STABILIZATION OF WATERWAYS AND OUTLETS

ALL ON SITE STORMWATER CONVEYANCE CHANNELS WILL BE DESIGNED AND CONSTRUCTED TO WITHSTAND THE EXPECTED VELOCITY OF FLOW FROM A 10 YEAR FREQUENCY STORM WITHOUT EROSION. DESIGN FOR A LARGER MAY BE NECESSARY FOR PROTECTION FROM THE STORMWATER FLOW. STABILIZATION ADEQUATE TO PREVENT EROSION WILL ALSO BE PROVIDED AT THE OUTLETS OF ALL PIPES AND PAVED CHANNELS.

STORM SEWER INLET PROTECTION

ALL STORM SEWER INLETS WHICH ARE MADE OPERABLE DURING CONSTRUCTION WILL BE PROTECTED SO THAT SEDIMENT-LADEN WATER WILL NOT ENTER THE CONVEYANCE SYSTEM WITHOUT FIRST BEING FILTERED OR OTHERWISE TREATED TO REMOVE SEDIMENT.

WORKING IN OR CROSSING WATERCOURSES

CONSTRUCTION VEHICLES WILL BE KEPT OUT OF WATERCOURSES WHENEVER POSSIBLE. WHERE IN-CHANNEL WORK IS NECESSARY, PRECAUTIONS WILL BE TAKEN TO STABILIZE THE WORK AREA DURING CONSTRUCTION TO MINIMIZE EROSION. THE CHANNEL (INCLUDING BED AND BANKS) WILL ALWAYS BE RESTABILIZED IMMEDIATELY AFTER IN-CHANNEL WORK IS COMPLETED. WHERE A LIVE WATERCOURSE MUST BE CROSSED BY CONSTRUCTION VEHICLES REGULARLY DURING CONSTRUCTION, A TEMPORARY STREAM CROSSING WILL BE PROVIDED.

CONSTRUCTION ACCESS ROUTES AND PARKING AREAS

WHENEVER CONSTRUCTION VEHICLE ACCESS ROUTES INTERSECT PAVED PUBLIC ROADS, PROVISIONS WILL BE MADE TO MINIMIZE THE TRANSPORT OF SEDIMENT (MUD) BY RUNOFF OR VEHICLE TRACKING ONTO THE PAVED SURFACE. TEMPORARY CONSTRUCTION ROADS WILL FOLLOW THE CONTOUR OF THE NATURAL TERRAIN TO THE EXTENT POSSIBLE. SLOPES SHOULD NOT EXCEED 10 PERCENT. ROADBEDS SHALL BE AT LEAST 14 FEET WIDE FOR ONE-WAY TRAFFIC AND 20 FEET WIDE FOR TWO-WAY TRAFFIC. TEMPORARY PARKING AREAS WILL BE LOCATED ON NATURALLY FLAT AREAS WHENEVER POSSIBLE TO MINIMIZE GRADING. GRADES FOR SAID PARKING AREAS SHOULD BE SUFFICIENT TO PROVIDE DRAINAGE BUT NOT EXCEED 4 PERCENT SLOPE. BOTH TEMPORARY AND PERMANENT ROADS AND PARKING AREAS MAY REQUIRE PERIODIC TOP DRESSING WITH NEW GRAVEL. SEEDED AREAS ADJACENT TO ROADS AND PARKING AREAS WILL BE CHECKED PERIODICALLY TO ENSURE THAT A VIGOROUS STAND OF VEGETATION IS MAINTAINED.

DISPOSITION OF TEMPORARY MEASURES

ALL TEMPORARY EROSION AND SEDIMENT CONTROL MEASURES WILL BE DISPOSED OF AFTER FINAL SITE STABILIZATION IS ACHIEVED OR AFTER THE TEMPORARY MEASURES ARE NO LONGER NEEDED. TRAPPED SEDIMENT AND OTHER DISTURBED SOIL AREAS RESULTING FROM THE DISPOSITION OF TEMPORARY MEASURES WILL BE PERMANENTLY STABILIZED TO PREVENT EROSION AND SEDIMENTATION.

MAINTENANCE

ALL TEMPORARY AND PERMANENT EROSION AND SEDIMENT CONTROL MEASURES WILL BE MAINTAINED AND REPAIRED AS NEEDED TO ASSURE CONTINUED PERFORMANCE OF THEIR INTENDED FUNCTION.

i.e. STORM INLET PROTECTION
INLET STRUCTURES SHALL BE INSPECTED AFTER EACH RAIN AND REPAIRS MADE AS NEEDED. SEDIMENT SHALL BE REMOVED AND THE INLET PROTECTION SHALL BE RESTORED TO ITS ORIGINAL WORKING CONDITION. AT NO TIME SHALL MORE THAN A 2" BUILD UP OF SEDIMENT REMAIN AROUND THE INLET PROTECTION.

i.e. FILTER STRIPS
A HEALTHY GROWTH OF VEGETATION CAN BEST BE MAINTAINED BY FERTILIZING, REMOVING SEDIMENT WHEN FILTER BECOMES CLOGGED, AND BY PREVENTING CONSTRUCTION TRAFFIC FROM DRIVING ACROSS FILTER STRIPS.

i.e. SILT FENCES AND FILTER BARRIERS
SILT FENCES AND FILTER BARRIERS SHALL BE INSPECTED IMMEDIATELY AFTER EACH RAINFALL AND AT LEAST DAILY DURING PROLONGED RAINFALL. ANY REQUIRED REPAIRS SHALL BE MADE IMMEDIATELY.

9. CONSTRUCTION CONTROL PRACTICES:

SILT FENCES (SF) SEE SILT FENCE DETAIL

MATERIAL: SYNTHETIC FILTER FABRIC SHALL BE A SHEET OF PROPYLENE, NYLON, POLYESTER OR ETHYLENE YARN AND SHALL BE CERTIFIED BY THE MANUFACTURER OR SUPPLIER AS CONFORMING TO THE FOLLOWING REQUIREMENTS.

PHYSICAL PROPERTY	REQUIREMENTS
FILTERING EFFICIENCY	75 PERCENT (MIN.)
TENSILE STRENGTH AT 20% (MAX.) ELONGATION	EXTRA STRENGTH 50 lbs/lin. in. (MIN.) STANDARD STRENGTH 30 lbs/lin. in. (MIN.)
FLOW RATE	0.3 gal./sq. ft./min. (MIN.)

* REQUIREMENTS REDUCED BY 50% AFTER 6 MONTHS OF INSTALLATION.

SYNTHETIC FILTER FABRIC SHALL CONTAIN ULTRAVIOLET RAY INHIBITORS AND STABILIZERS TO PROVIDE A MINIMUM OF 6 MONTHS OF EXPECTED USABLE CONSTRUCTION LIFE AT A TEMPERATURE OF ZERO DEGREES F TO 120 DEGREES F.

BURLAP SHALL BE 10 OUNCES PER SQ. YD. OF FABRIC.

POSTS FOR SILT FENCES SHALL BE EITHER 4" x 4" WOOD OR STEEL WITH A MIN. LENGTH OF 5 FEET. STEEL POSTS SHALL HAVE PROJECTIONS FOR FASTENING WIRE TO THEM.

WIRE FENCE REINFORCEMENT FOR SILT FENCES USING STANDARD STRENGTH FILTER CLOTH SHALL BE A MIN. OF 42 INCHES IN HEIGHT, A MIN. OF 14 GA. AND SHALL HAVE A MAX. MESH SPACING OF 6 INCHES.

THE STANDARD STRENGTH FILTER FABRIC SHALL BE STAPLED OR WIRED TO THE FENCE, AND 8 INCHES OF THE FABRIC SHALL BE EXTENDED INTO THE TRENCH. THE FABRIC SHALL NOT EXCEED 36 INCHES ABOVE THE ORIGINAL GROUND SURFACE. FILTER FABRIC SHALL NOT BE STAPLED TO EXISTING TREES.

THE FILTER FABRIC SHALL BE PURCHASED IN A CONTINUOUS ROLL CUT TO THE LENGTH OF THE BARRIER TO AVOID THE USE OF JOINTS. WHEN JOINTS ARE NECESSARY, FILTER CLOTH SHALL BE SPLICED TOGETHER ONLY AT A SUPPORT POST, WITH A MIN. 6 INCH OVERLAP, AND SECURELY SEALED.

POSTS SHALL BE SPACED AT A MAX. OF 10 FEET APART. WHEN EXTRA STRENGTH FABRIC IS USED WITHOUT THE WIRE SUPPORT FENCE, POST SPACING SHALL NOT EXCEED 6 FEET.

WHEN EXTRA STRENGTH FILTER FABRIC AND CLOSER POST SPACING ARE USED, THE WIRE MESH SUPPORT FENCE MAY BE ELIMINATED. IN SUCH A CASE, THE FILTER FABRIC IS STAPLED OR WIRED DIRECTLY TO THE POSTS WITH ALL OTHER PROVISIONS APPLYING.

FILTER BARRIERS (FB) SEE FILTER BARRIER DETAIL

MATERIAL	FLOW RATE (gal./sq. ft./min.)	FILTER EFFICIENCY %
STRAW	5.6	67
BURLAP (10 OZ. FABRIC)	2.4	84
SYNTHETIC FABRIC	0.3 (AVG.)	97 (AVG.)

THE HEIGHT OF A FILTER BARRIER SHALL BE A MIN. OF 15 INCHES AND SHALL NOT EXCEED 18 INCHES.

THE FILTER FABRIC SHALL BE PURCHASED IN A CONTINUOUS ROLL CUT TO THE LENGTH OF THE BARRIER TO AVOID THE USE OF JOINTS.

STAKES SHALL BE SPACED AT A MAX. OF 3 FEET APART AT THE BARRIER LOCATION AND DRIVEN SECURELY INTO THE GROUND (MIN. OF 8 INCHES).

A TRENCH SHALL BE EXCAVATED APPROX. 4 INCHES WIDE AND 4 INCHES DEEP ALONG THE LINE OF STAKES AND UPSLOPE FROM THE BARRIER.

THE FILTER MATERIAL SHALL BE STAPLED ON THE WOODEN STAKES, AND 8 INCHES OF FABRIC SHALL BE EXTENDED INTO THE TRENCH. HEAVY DUTY WIRE STAPLES AT LEAST 1/2 INCH LONG SHALL BE USED. FILTER MATERIAL SHALL NOT BE STAPLED INTO EXISTING TREES.

THE TRENCH SHALL BE BACKFILLED AND SOIL COMPACTED OVER THE FILTER MATERIAL.

IF A FILTER BARRIER IS TO BE CONSTRUCTED ACROSS A DITCH LINE OR SWALE, THE BARRIER SHALL BE OF SUFFICIENT LENGTH TO ELIMINATE END FLOW, AND THE PLAN CONFIGURATION SHALL RESEMBLE AN ARC OR HORSESHOE WITH THE ENDS ORIENTED UPSLOPE.

CHECK DAM (CD)
CHECK DAMS ARE USUALLY INEFFECTIVE FOR CATCHING SEDIMENT BUT CAN SLOW FLOW VELOCITIES AND REDUCE CHANNEL EROSION. ROCK TYPE AND SIZE OF THE DAM ARE TO BE DETERMINED BY THE ENGINEER.
IF AT ANY TIME IT IS FOUND THAT A CHECK DAM ALONE IS INEFFECTIVE IN ADEQUATELY PERFORMING ITS FUNCTION, ADDITIONAL CONTROL MEASURES MUST BE PROVIDED.

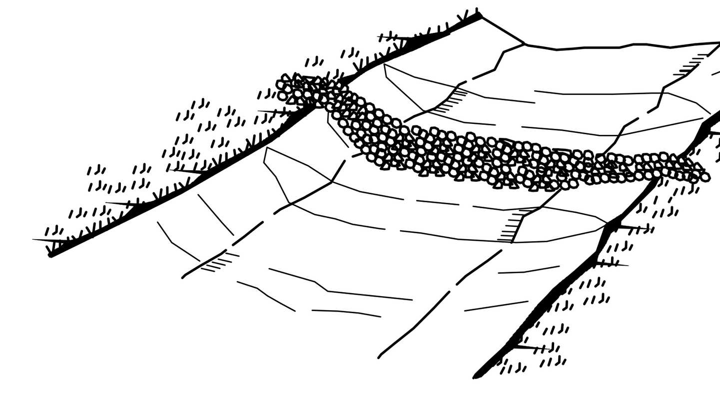

3D VIEW

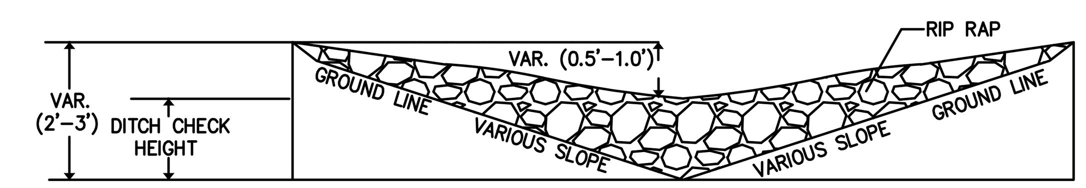

END VIEW

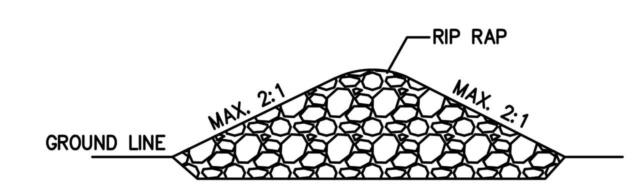

SIDE VIEW

CHECK DAM (CD)

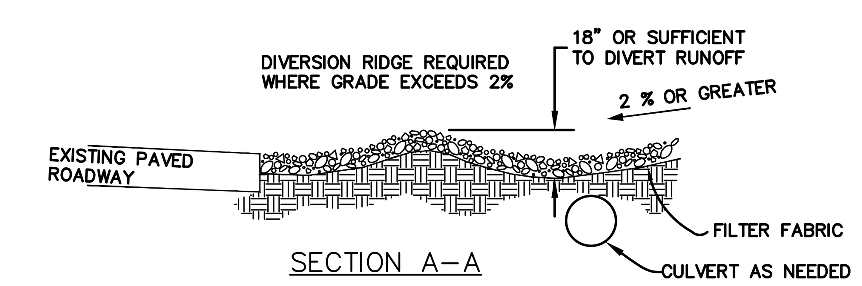

SECTION A–A

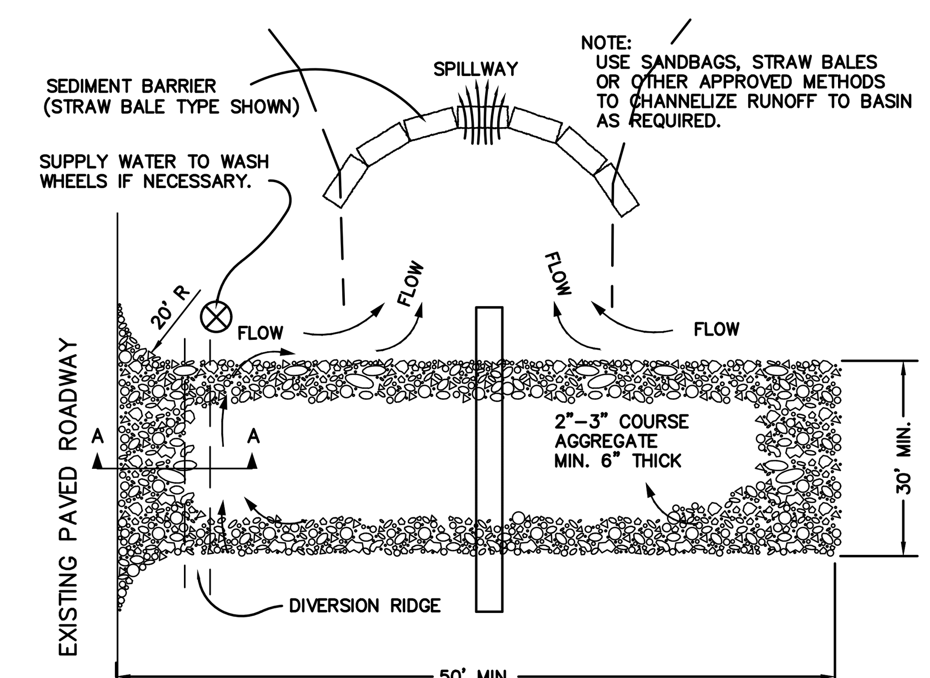

PLAN

TEMPORARY GRAVEL CONSTRUCTION ENTRANCE

1. SET POSTS AND EXCAVATE A 4" X 4" TRENCH UPSLOPE ALONG THE LINE OF POSTS.

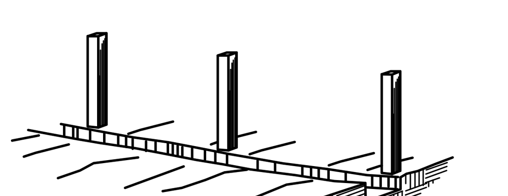

2. STAPLE WIRE FENCING TO THE POSTS.

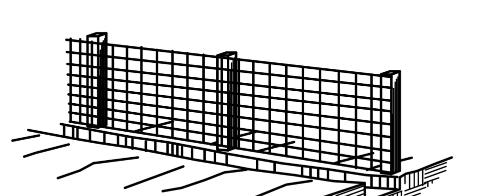

3. ATTACH THE FILTER FABRIC TO THE WIRE FENCE AND EXTEND IT INTO THE TRENCH.

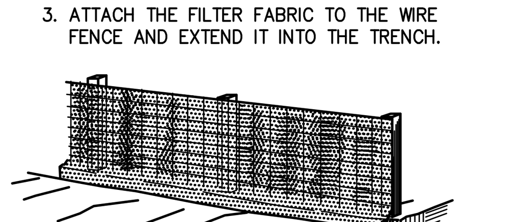

4. BACKFILL AND COMPACT THE EXCAVATED SOIL.

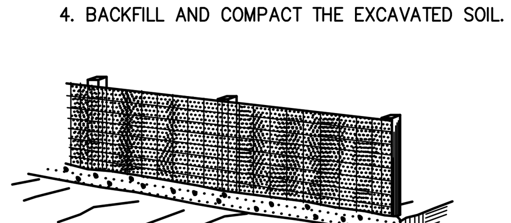

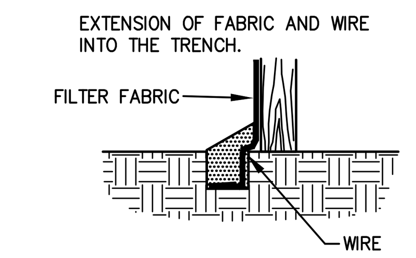

SILT FENCE (SF)

NOTE: STRAW BALE BARRIERS & SOD MAY BE SUBSTITUTED FOR SILT FENCE.

CONSTRUCTION SPECIFICATIONS
1. THE AGGREGATE SIZE FOR CONSTRUCTION OF THE PAD SHALL BE 2-TO 4-INCH STONE. PLACE THE GRAVEL TO THE SPECIFIC GRADE AND DIMENSIONS SHOWN ON THE PLANS, AND SMOOTH IT.
2. THE THICKNESS OF THE PAD SHALL NOT BE LESS THAN 6 INCHES. USE GEOTEXTILE FABRICS, IF NECESSARY, TO IMPROVE STABILITY OF THE FOUNDATION IN LOCATIONS SUBJECT TO SEEPAGE OR HIGH WATER TABLE. GEOTEXTILE SHALL HAVE A GRAB TENSILE STRENGTH OF 200 LB. AND A MULLEN BURST STRENGTH OF AT LEAST 190 LB.
3. THE WIDTH OF THE PAD SHALL NOT BE LESS THAN THE FULL WIDTH OF ALL POINTS OF INGRESS OR EGRESS AND IN ANY CASE SHALL NOT BE LESS THAN 12 FEET WIDE. CONDITIONS DEMAND, AND REPAIR AND/OR CLEANOUT OF ANY MEASURES USED
4. LOCATE CONSTRUCTION ENTRANCES AND EXITS TO LIMIT SEDIMENT LEAVING THE SITE AND TO PROVIDE FOR MAXIMUM UTILITY BY ALL CONSTRUCTION VEHICLES. AVOID ENTRANCES WHICH HAVE STEEP GRADES AND ENTRANCES AT CURVES IN PUBLIC ROADS.
5. THE ENTRANCE SHALL BE MAINTAINED IN A CONDITION THAT WILL PREVENT TRACKING OR FLOWING OF SEDIMENT ONTO PUBLIC RIGHTS OF WAY. THIS MAY REQUIRE PERIODIC TOP DRESSING WITH ADDITIONAL STONE AS

   TO TRAP SEDIMENT.
6. ALL SEDIMENT SPILLED, DROPPED, WASHED OR TRACKED ONTO PUBLIC RIGHTS-OF-WAY SHALL BE REMOVED IMMEDIATELY. PROVIDE DRAINAGE TO CARRY WATER TO A SEDIMENT TRAP OR OTHER SUITABLE OUTLET.
7. WHEN NECESSARY, WHEELS SHALL BE CLEANED TO REMOVE SEDIMENT PRIOR TO ENTRANCE ONTO PUBLIC RIGHTS-OF-WAY. WHEN WASHING IS REQUIRED, IT SHALL BE DONE ON AN AREA STABILIZED WITH CRUSHED STONE THAT DRAINS INTO AN APPROVED SEDIMENT TRAP OR SEDIMENT BASIN.
8. ALL SEDIMENT SHALL BE PREVENTED FROM ENTERING ANY STORM DRAIN, DITCH OR WATERCOURSE THROUGH USE OF SAND BAGS, GRAVEL, STRAW BALES, OR OTHER APPROVED METHODS.
9. A CULVERT SHALL BE CONSTRUCTED UNDER THE ENTRANCE IF NEEDED TO PREVENT SURFACE WATER FLOWING ACROSS THE ENTRANCE AND FROM BEING DIRECTED OUT ONTO PAVED SURFACES.

INSPECTION AND MAINTENANCE
1. MAINTAIN THE GRAVEL PAD IN A CONDITION TO PREVENT MUD OR SEDIMENT FROM LEAVING THE CONSTRUCTION SITE.
2. REPLACE GRAVEL MATERIAL WHEN SURFACE VOIDS ARE VISIBLE.
3. AFTER EACH RAINFALL, INSPECT ANY STRUCTURE USED TO TRAP SEDIMENT AND CLEAN IT OUT AS NECESSARY.
4. IMMEDIATELY REMOVE ALL OBJECTIONABLE MATERIALS SPILLED, WASHED, OR TRACKED ONTO PUBLIC ROADWAYS. REMOVE ALL SEDIMENT DEPOSITED ON PAVED ROADWAYS WITHIN 24 HOURS.

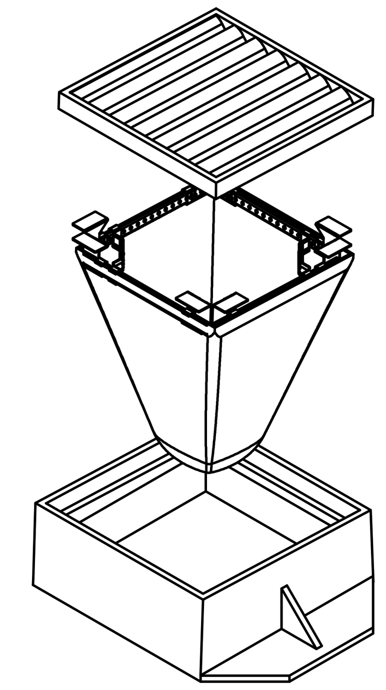

INLET FILTER FOR STANDARD INLETS

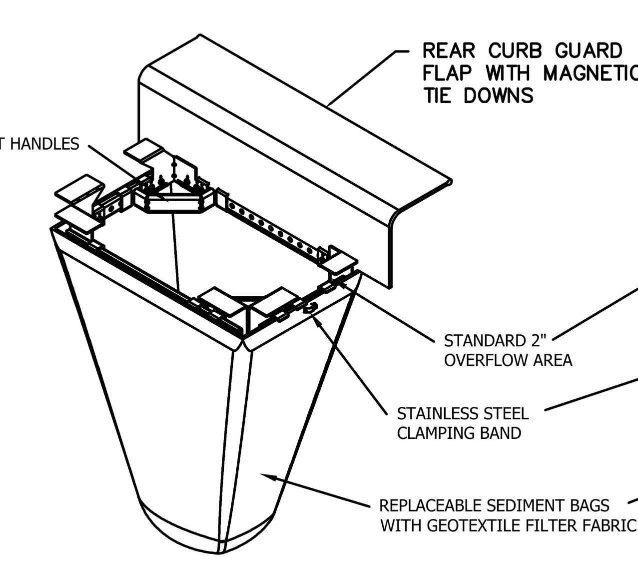

COMBINATION INLET FILTER FOR CURB HOODS

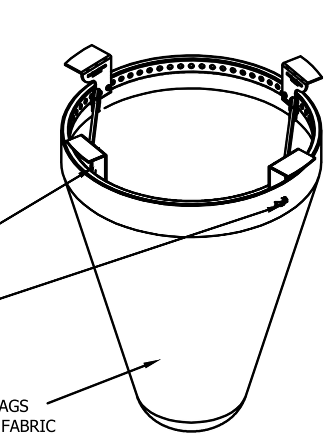

FILTER FOR ROUND INLETS

FILTERS FOR TEMPORARY INLET PROTECTION CONSULT MANUFACTURER FOR PRODUCT SELECTION

FLEX-STORM OR EQUIVALENT

INLET FILTER

RVP ENGINEERING

REVISIONS

EROSION NOTES AND DETAILS
MARRIOTT HOTEL
LOT #4 UPPER METRO PLACE
CITY OF DUBLIN, FRANKLIN COUNTY, OHIO

SCALE:
DATE: MAY 2, 2017
DRAWN: WCD
DESIGNED: SAD
CHECKED: RVP
XREF:
JOB NO.: 16061

STONEHENGE DUBLIN HOTEL

Page
C141

ELECTRONIC DATA FILES HAVE BEEN USED BY RVP ENGINEERING FOR THE SOLE PURPOSE OF GENERATING THIS PLAN DRAWING. THE APPROVED PLAN DRAWING REPRESENTS ACTUAL DESIGN INTENT IN CASE OF DISCREPANCIES BETWEEN ELECTRONIC DATA FILES AND THE APPROVED PLAN DRAWING. RVP ENGINEERING ASSUMES NO RESPONSIBILITY FOR ANY USE OR MANIPULATION OF ELECTRONIC DATA FILES BY OTHERS TO GENERATE BID PROPOSALS, PREPARE ESTIMATES, PERFORM CONSTRUCTION LAYOUT OR ANY OTHER USE. THE USE OR REUSE OF ELECTRONIC DATA FILES IS AT THE USER'S RISK AND FULL LEGAL RESPONSIBILITY.

A
1

LANDSCAPE PLAN OVERALL

SCALE: 1"=20.0'

OHIO Utilities Protection SERVICE
811 or 1-800-362-2764 Call Before You Dig

LOT 2
6.500 ACRES

UPPER METRO PLACE
(60' R/W)

existing street trees will be protected during construction, no utilities or trench's, tunnels, or driveways shall be installed within 10' radius of existing trees without the written approval of the City Forester

3 APOLLO SUGAR MAPLE
1 existing street trees to be removed for new driveway access

R=220.00'
L=325.38'
Δ=84°44'21"
BEARING=N55°17'59"E
CHORD=296.52'

S82°19'51"E 338.82'

3 CLUMP RIVER BIRCH
3 CRIMSON POINT PLUM
SEE BUILDING DETAIL NEXT SHEET

PROPOSED TOWNEPLACE SUITES
12,734 SF / FLOOR
5-STORIES, 105 GUEST ROOMS
FF.=874.00

DUMPSTER ENCLOSURE

5 APOLLO SUGAR MAPLE
1 NORWAY SPRUCE
2 ROSEHILL ENGLISH OAK
SEE DETAIL BELOW

APPROXIMATE LOCATION OF UNDERGROUND DETENTION

A
B
C
D
E

1 ROSEHILL ENGLISH OAK
9 SLENDER SILHOUETTE SWEETGUM
SEE ISLAND DETAILS A,B,&C SHEET L200
1 WILDFIRE BLACKGUM
2 SKLYLINE HONEYLOCUST
SEE ISLAND DETAILS D&E SHEET L200

2 NEW HARMONY ELM, SEE DETAIL SHEET 2

SEED OR SOD

N83°19'11"W 567

EROSION CONTROL LEGEND

- SF — SILT FENCE
- CD — CHECK DAM
- IF — INLET FILTER
- 100 YEAR DRAINAGE ROUTE

LOT 4
PARCEL NO. 273-009974
SHIHASI METRO PLACE, LLP
IN 201605020054093
2.399 ACRES

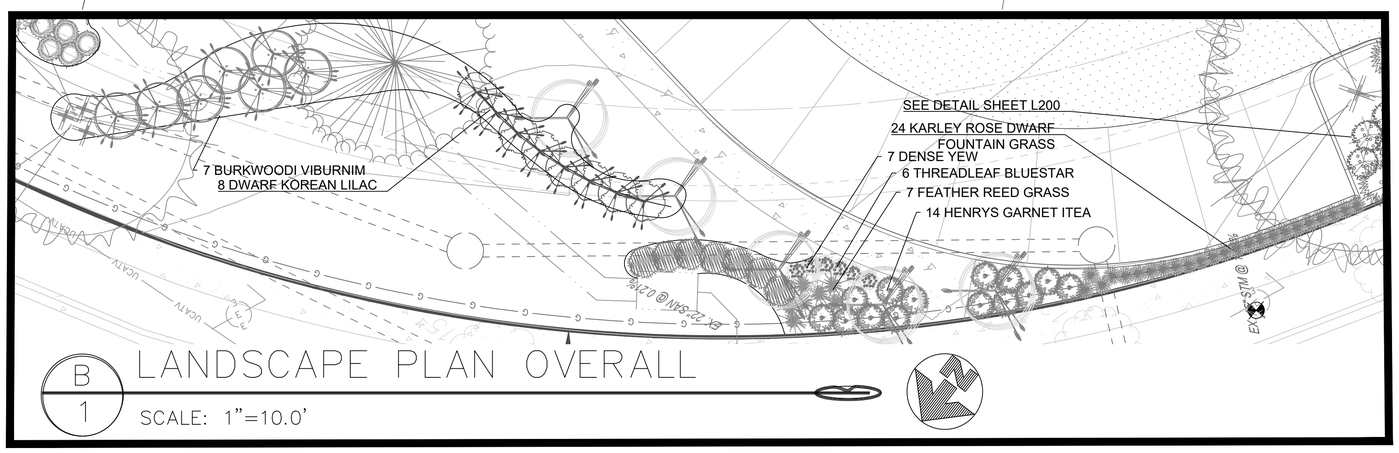

B
1

LANDSCAPE PLAN OVERALL

SCALE: 1"=10.0'

PLANT KEY

5.2.17

QNT	SIZE	BOTANICAL NAME	COMMON
8	2.5 in	*Acer saccharum 'Apollo Sugar '*	Apollo Sugar Maple
2	2.5 in	*Gleditsia triacanthos inermis 'Skyline'*	Skyline Honeylocust
9	2.5 in	*Liquidambar styraciflua 'Slender Silhouette'*	Sweetgum slender silhouette
1	2.5 in	*Nyssa sylvatica 'Wildfire '*	Black Gum Wildfire
3	2.5 in	*Quercus robur 'Rosehill'*	Rosehill Columnar English Oak
2	2.5 in	*Ulmus americana 'New Harmony'*	New Harmony American Elm
3	8'-10'	*Betula nigra 'Heritage '*	Heritage Birch
3	8'/1.75 in	*Prunus cerasifera 'Crimson Point'*	Crimson Point Plum
1	7'	*Picea abies*	Norway Spruce
3	5 gal	*Hydrangea arborescens "Incrediball"*	Incrediball Hydrangea
7	5gal	*Hydrangea macrophylla 'Blushing Bride'*	Blushing Bride Hydrangea
2	4'-5' standard	*Hydrangea paniculata 'Pee Gee'*	Pee Gee Hydrangea
20	3 gal	*Hydrangea quercifolia 'Pee Wee'*	Pee Wee Hydrangea
14	3 gal	*Itea virginica 'Henry's Garnet'*	Henry's Garnet Itea
39	2 gal	*Rosa 'Fragrant Spreader'*	Fragrant Spreader Rose
7	3 gal	*Spiraea x bumalda 'Goldflame'*	Goldflame Spirea
8	5 gal	*Syringa meyeri 'Palibin'*	Dwarf Korean Lilac
7	36 in	*Viburnum x burkwoodii*	Burkwood Viburnum
29	15-18 in	*Buxus x 'Green Gem'*	Green Gem Boxwood
4	15 in	*Buxus x 'Green Mountain'*	Green Mountain Boxwood
4	24 in	*Buxus x 'Green Mountain'*	Green Mountain Boxwood
4	36 in	*Buxus x 'Green Mountain'*	Green Mountain Boxwood
14	3 gal	*Juniperus conferta 'Blue Pacific'*	Blue Pacific Juniper
26	3 gal	*Juniperus procumbens Nana*	Dwarf Japanese Garden Juniper
24	3 gal	*Juniperus squamata 'Blue Star'*	Blue Star Juniper
15	18-24 in	*Taxus x media 'Densiformis'*	Dense Yew
27	6'	*Thuja occidentalis 'Emerald'*	Emerald Green Arborvitae
20	3 gal	*Calamagrostis x acutiflora 'Avalanche'*	Variegated Avalanche Feather Reed Grass
7	3 gal	*Panicum virgatum 'Heavy Metal'*	Heavy Metal Switch Grass
47	2 gal	*Pennisetum orientale 'Karley Rose'*	Karley Rose Fountain Grass
5	1 gal	*Hosta 'August Moon'*	August Moon Hosta
12	1 gal	*Hosta 'Blue Angel'*	Blue Angel Hosta
31	1 gal	*Geranium 'Rozanne'*	Rozanne Geranium
6	1 gal	*Amsonia hubrechtii*	Threadleaf Bluestar
3	1 gal	*Matteuccia Struthiopteris 'The King'*	The King Ostrich Fern
25	1 gal	*Vinca minor*	Creeping Myrtle
		PERENNIAL TBD	

PLAN BY:

Gayle A. Frazer
Registered Landscape Architect
7377 BRIDGEPOINT PASS CINCINNATI, OHIO 45248
513-607-8096 GAF1LA@FUSE.NET

Gayle A. Frazer
Registered Landscape Architect

REVISIONS

LANDSCAPE PLAN
MARRIOTT HOTEL
LOT #4 UPPER METRO PLACE
CITY OF DUBLIN, FRANKLIN COUNTY, OHIO

SCALE: 1"=20'
DATE: MAY 2, 2017
DRAWN: WCD
DESIGNED: SAD
CHECKED: RVP
XREF:
JOB NO.: 16061

STONEHENGE DUBLIN HOTEL

Page
L100

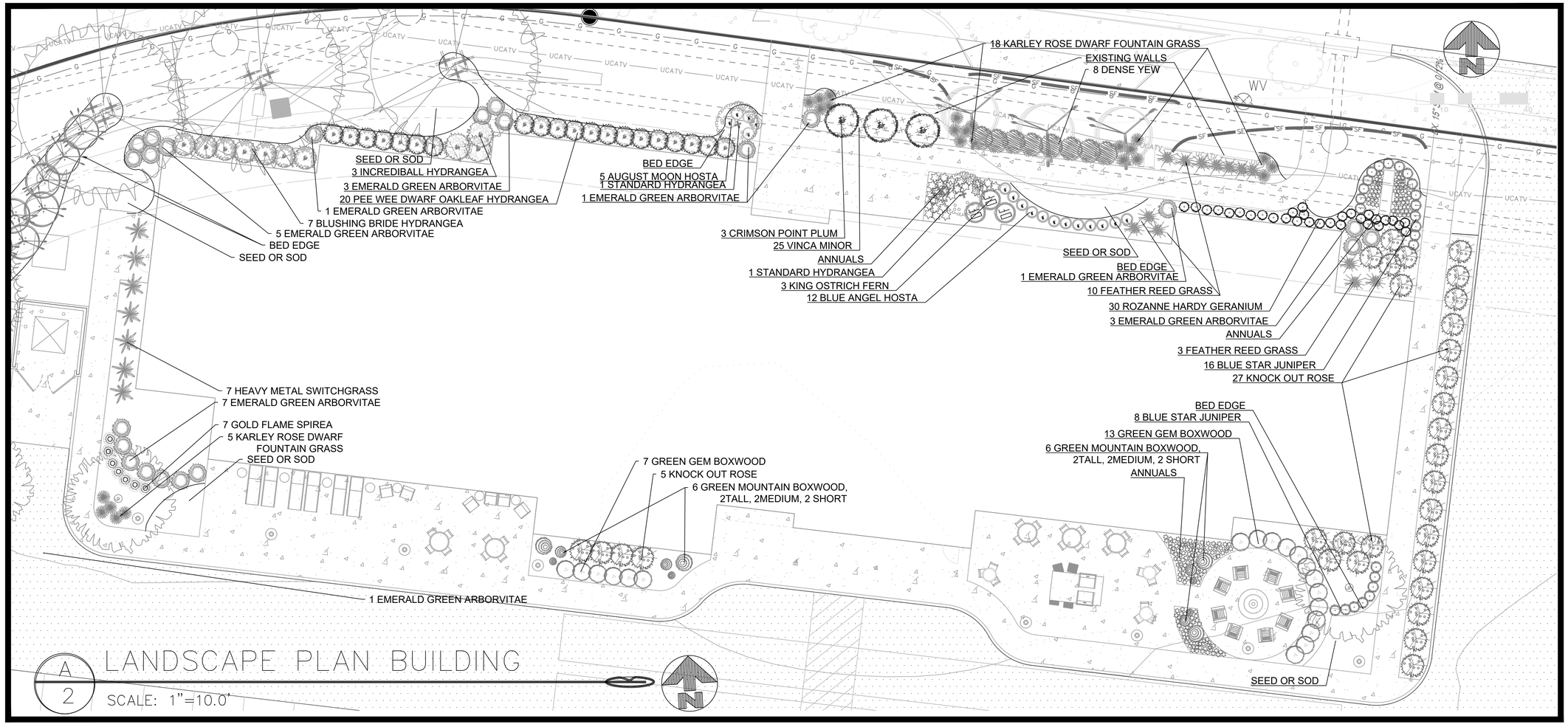

A/2 LANDSCAPE PLAN BUILDING

SCALE: 1"=10.0'

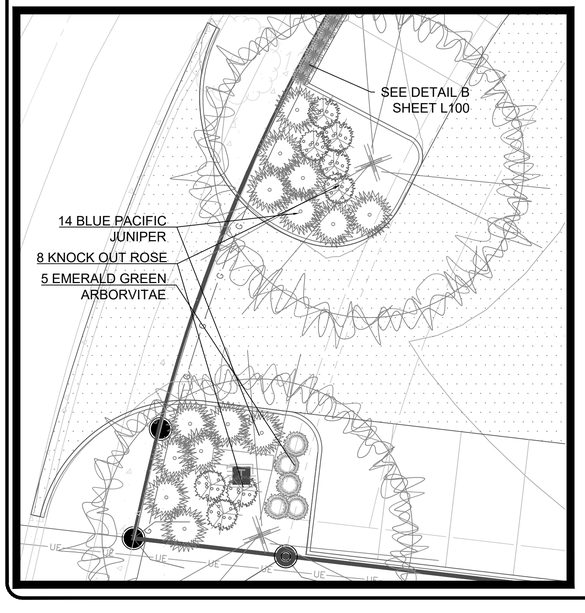

B/2 LANDSCAPE PLAN PARKING ISLANDS AND STREETSCAPE BUFFER PLANTINGS

SCALE: 1"=10.0'

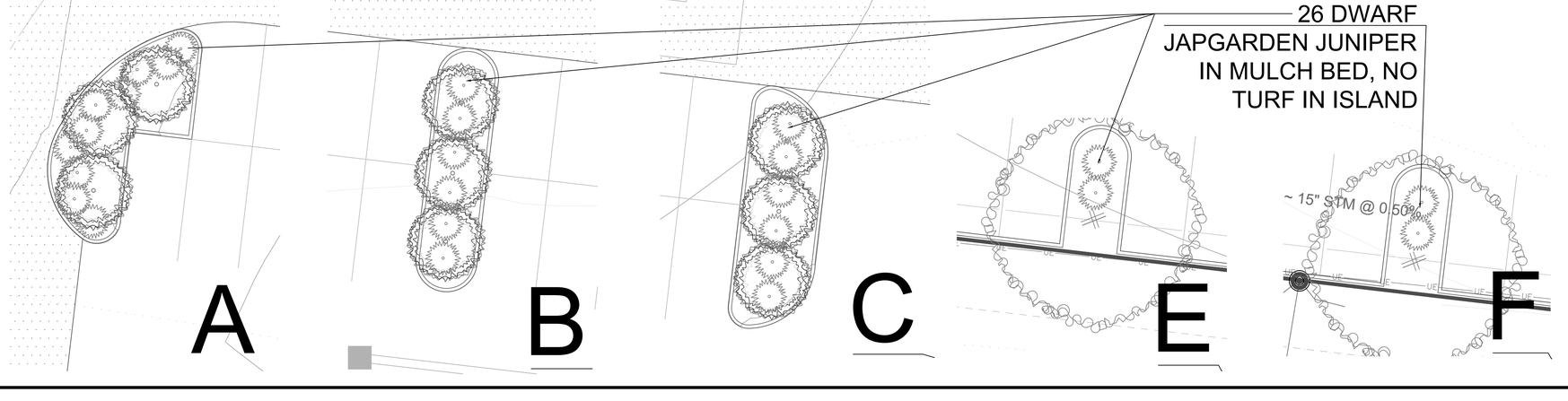

Gayle A. Frazer
Registered Landscape Architect

REVISIONS

LANDSCAPE PLAN DETAILS
MARRIOTT HOTEL
LOT #4 UPPER METRO PLACE
CITY OF DUBLIN, FRANKLIN COUNTY, OHIO

SCALE: 1"=20'
DATE: MAY 2, 2017
DRAWN: WCD
DESIGNED: SAD
CHECKED: RVP
XREF:
JOB NO.: 16061

STONEHENGE DUBLIN HOTEL

Page
L200

SPECIFICATIONS AND DETAILS

GENERAL NOTES

*ALL TREES AND SPECIMEN PLANT MATERIAL SHALL BE APPROVED BY LANDSCAPE ARCHITECT.

*PROVIDE QUALITY, SIZE, GENUS, SPECIES, AND VARIETY OF EXTERIOR PLANTS INDICATED, COMPLYING WITH APPLICABLE REQUIREMENTS IN ANSI Z60.1, "AMERICAN STANDARD FOR NURSERY STOCK."

*FURNISH NURSERY-GROWN TREES AND SHRUBS COMPLYING WITH ANSI Z60.1, WITH HEALTHY ROOT SYSTEMS DEVELOPED BY TRANSPLANTING OR ROOT PRUNING. PROVIDE WELL-SHAPED, FULLY BRANCHED, HEALTHY, VIGOROUS STOCK, FREE OF DISEASE, INSECTS, EGGS, LARVAE, AND DEFECTS SUCH AS KNOTS, SUN SCALD, INJURIES, ABRASIONS, AND DISFIGUREMENT.

*PROVIDE TREES AND SHRUBS OF SIZES AND GRADES COMPLYING WITH ANSI Z60.1 FOR TYPE OF TREES AND SHRUBS REQUIRED. TREES AND SHRUBS OF A LARGER SIZE MAY BE USED, IF ACCEPTABLE TO LANDSCAPE ARCHITECT, WITH A PROPORTIONATE INCREASE IN SIZE OF ROOTS OR BALLS.

*IF FORMAL ARRANGEMENTS OR CONSECUTIVE ORDER OF TREES OR SHRUBS IS SHOWN, SELECT STOCK FOR UNIFORM HEIGHT AND SPREAD, AND NUMBER LABEL TO ASSURE SYMMETRY IN PLANTING.

*LABEL AT LEAST ONE TREE AND ONE SHRUB OF EACH VARIETY AND CALIPER WITH A SECURELY ATTACHED, WATERPROOF TAG BEARING LEGIBLE DESIGNATION OF BOTANICAL AND COMMON NAME.

*LANDSCAPE ARCHITECT MAY OBSERVE TREES AND SHRUBS EITHER AT PLACE OF GROWTH OR AT SITE BEFORE PLANTING FOR COMPLIANCE WITH REQUIREMENTS FOR GENUS, SPECIES, VARIETY, SIZE, AND QUALITY. LANDSCAPE ARCHITECT RETAINS RIGHT TO OBSERVE TREES AND SHRUBS FURTHER FOR SIZE AND CONDITION OF BALLS AND ROOT SYSTEMS, INSECTS, INJURIES, AND LATENT DEFECTS AND TO REJECT UNSATISFACTORY OR DEFECTIVE MATERIAL AT ANY TIME DURING PROGRESS OF WORK. REMOVE REJECTED TREES OR SHRUBS IMMEDIATELY FROM PROJECT SITE.

*TOPSOIL SHALL BE ASTM D 5268, pH RANGE OF 5.5 TO 7, A MINIMUM OF 4 PERCENT ORGANIC MATERIAL CONTENT; FREE OF STONES 1 INCH OR LARGER IN ANY DIMENSION AND OTHER EXTRANEOUS MATERIALS HARMFUL TO PLANT GROWTH.

*COMPOST SHALL BE WELL-COMPOSTED, STABILE , AND WEED-FREE ORGANIC MATTER, pH RANGE OF 5.5 TO 8; MOISTURE CONTENT 35 TO 55 PERCENT BY WEIGHT; 100 PERCENT PASSING THROUGH ONE INCH SIEVE; SOLUBLE SALT CONTENT OF 5 TO 10 DECISIEMENS/M; NOT EXCEEDING 0.5 PERCENT INERT CONTAMINANTS AND FREE OF SUBSTANCES TOXIC TO PLANTINGS.

*FERTILIZER TO BE SLOW-RELEASE, GRANULAR OR PELLETED CONSISTING OF 50 PERCENT WATER-INSOLUBLE NITROGEN, PHOSPHORUS, AND POTASSIUM IN AMOUNTS RECOMMENDED FOR TYPE OF PLANT BEING GROWN.

*MULCH TO BE FREE FROM DELETERIOUS MATERIALS AND SUITABLE AS A TOP DRESSING OF TREES AND SHRUBS, AND WILL BE EITHER SHREDDED HARDWOOD OR PINE STRAW UNLESS NOTED OTHERWISE.

PREPARATION AND PLANTING

*LOCATE ALL UNDERGROUND UTILITIES PRIOR TO STARTING WORK . IF A PLANT IS SHOWN ON THE PLAN WITHIN THREE FEET OF AN UNDERGROUND UTILITY, NOTIFY LANDSCAPE ARCHITECT FOR ADJUSTMENT INSTRUCTIONS.

*PROTECT STRUCTURES, UTILITIES, SIDEWALKS, PAVEMENTS, AND OTHER FACILITIES, AND LAWNS AND EXISTING EXTERIOR PLANTS FROM DAMAGE CAUSED BY PLANTING OPERATIONS.

*PROVIDE EROSION-CONTROL MEASURES TO PREVENT EROSION OR DISPLACEMENT OF SOILS AND DISCHARGE OF SOIL-BEARING RUNOFF OR AIRBORNE DUST TO ADJACENT PROPERTIES AND WALKWAYS.

*LAY OUT INDIVIDUAL TREE AND SHRUB LOCATIONS AND AREAS FOR MULTIPLE EXTERIOR PLANTINGS. STAKE LOCATIONS, OUTLINE AREAS, ADJUST LOCATIONS WHEN REQUESTED, AND OBTAIN LANDSCAPE ARCHITECT'S ACCEPTANCE OF LAYOUT BEFORE PLANTING. MAKE MINOR ADJUSTMENTS AS REQUIRED.

*TREES SHALL BE SITED IN FIELD BY LANDSCAPE ARCHITECT WHERE NOTED ON PLANS.

*ALL PLANTING BEDS ARE TO BE PREPARED AS FOLLOWS :
- LOOSEN SUBGRADE TO A DEPTH OF 4 – 6". REMOVE STONES LARGER THAN 1" IN ANY DIMENSION AND STICKS, ROOTS, RUBBISH, AND OTHER EXTRANEOUS MATTER, AND LEGALLY DISPOSE OF THEM OFF OWNER'S PROPERTY.
- SPREAD COMPOST AT A DEPTH OF 4 – 6" AND TILL WITH LOOSENED SUBGRADE , MIXING THOROUGHLY.
- GRADE PLANTING BEDS TO A SMOOTH, UNIFORM SURFACE PLANE WITH LOOSE, UNIFORMLY FINE TEXTURE. ROLL AND RAKE, REMOVE RIDGES, AND FILL DEPRESSIONS TO MEET FINISH GRADES.
- EDGE BEDS 3 – 4" DEEP (SEE DETAIL).

*NOTIFY LANDSCAPE ARCHITECT IF SUBSOIL CONDITIONS SHOW EVIDENCE OF UNEXPECTED WATER SEEPAGE OR RETENTION IN TREE OR SHRUB PITS.

*ALL PLANTS ARE TO BE FERTILIZED WITH A SLOW- RELEASE FERTILIZER PER MANUFACTURER'S WRITTEN INSTRUCTIONS.

*REFER TO TYPICAL PLANTING DETAILS FOR PLANT INSTALLATION.

*IT IS THE CONTRACTOR'S OPTION WHETHER OR NOT TO STAKE A TREE, BUT IT IS ALSO THE CONTRACTOR'S RESPONSIBILITY TO ASSURE PLANTS REMAIN IN AN UPRIGHT POSITION UNTIL THE END OF THE WARRANTY PERIOD.

*ALL PLANTING BEDS AND INDIVIDUAL TREES AND SHRUBS ARE TO BE MULCHED AT A DEPTH OF 2 – 3". APPLY PRE-EMERGENT HERBICIDE BEFORE MULCHING PER MANUFACTURER'S WRITTEN INSTRUCTIONS.

*FOR ALL PLANT MATERIALS, PRUNE TO REMOVE DEAD OR INJURED BRANCHES ONLY, UNLESS OTHERWISE DIRECTED BY LANDSCAPE ARCHITECT.

*IT IS THE CONTRACTOR'S RESPONSIBILITY TO:
- KEEP ADJACENT PAVINGS AND CONSTRUCTION CLEAN, AND MAINTAIN WORK AREA IN AN ORDERLY CONDITION, FOR DURATION OF PROJECT.
- PROTECT EXTERIOR PLANTS FROM DAMAGE DUE TO LANDSCAPE OPERATIONS, OPERATIONS BY OTHER CONTRACTORS AND TRADES, AND OTHERS. MAINTAIN PROTECTION DURING INSTALLATION AND MAINTENANCE PERIODS. TREAT, REPAIR, OR REPLACE DAMAGED EXTERIOR PLANTING.
- REMOVE SURPLUS SOIL AND WASTE MATERIAL , INCLUDING EXCESS SUBSOIL , UNSUITABLE SOIL, TRASH, AND DEBRIS, AND LEGALLY DISPOSE OF THEM OFF OWNER'S PROPERTY.

WARRANTY

*CONTRACTOR SHALL PROVIDE OWNER WITH A WRITTEN WARRANTY FOR LABOR AND MATERIALS.

*CONTRACTOR SHALL WARRANT EXTERIOR PLANTS AGAINST DEFECTS, INCLUDING DEATH AND UNSATISFACTORY GROWTH, EXCEPT FOR DEFECTS RESULTING FROM LACK OF ADEQUATE MAINTENANCE, NEGLECT OR ABUSE BY OWNER, OR INCIDENTS THAT ARE BEYOND CONTRACTOR'S CONTROL .

*WARRANTY SHALL INCLUDE SPECIFIC WARRANTY PERIODS FOR TREES AND SHRUBS, GROUND COVERS, AND OTHER EXTERIOR PLANTS.

*SERVICES PROVIDED BY WARRANTY SHALL INCLUDE :
- MAINTAINING UPRIGHT POSITION OF EXTERIOR PLANTINGS DURING WARRANTY PERIOD.
- IMMEDIATE REMOVAL OF DEAD EXTERIOR PLANTS AND IMMEDIATE REPLACEMENT, UNLESS REQUIRED TO PLANT IN THE SUCCEEDING PLANTING SEASON.
- REPLACEMENT OF EXTERIOR PLANTS THAT ARE MORE THAN 25 PERCENT DEAD OR IN UNHEALTHY CONDITION AT END OF WARRANTY PERIOD.

*WARRANTY SHALL BE LIMITED TO ONE REPLACEMENT OF EACH EXTERIOR PLANT, EXCEPT FOR LOSSES OR REPLACEMENTS DUE TO FAILURE OF CONTRACTOR TO COMPLY WITH REQUIREMENTS.

SEEDING:

*SEED ALL DISTURBED AREAS. THE FINAL GRADE AND TOPSOIL WITHIN +/- .10 FEET WILL BE IN PLACE FOR SEEDING CONTRACTOR.

*APPLY A HIGH PHOSPHORUS FERTILIZER AT THE RATE OF 2-3 LB PER 1000 SF.

*TILL AREA TO BE SEEDED TO A DEPTH OF 4". RAKE TILLED AREA TO REMOVE DEBRIS 1" OR LARGER IN SIZE THAT HAS BEEN BROUGHT TO THE SURFACE DURING TILLING.

*SEED WITH APPROPRIATE MIXTURE AT THE MANUFACTURER'S WRITTEN RECOMMENDED RATE.

*RAKE SEED LIGHTLY INTO TOP OF TOPSOIL, ROLL LIGHTLY, AND WATER WITH FINE SPRAY.

*PROTECT SEEDED AREAS WITH SLOPES EXCEEDING 1:6 WITH EROSION-CONTROL FIBER MESH INSTALLED AND STAPLED ACCORDING TO MANUFACTURER'S WRITTEN INSTRUCTIONS.

*PROTECT ALL OTHER SEEDED AREAS BY SPREADING STRAW MULCH AT A UNIFORM RATE OF 2 TONS PER ACRE TO FORM A CONTINUOUS BLANKET 1-1/2" IN LOOSE DEPTH OVER SEEDED AREAS.

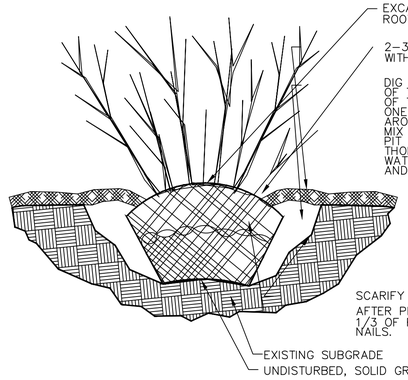

PLANTING DETAIL : BALLED AND BURLAPPED SHRUB
NOT TO SCALE

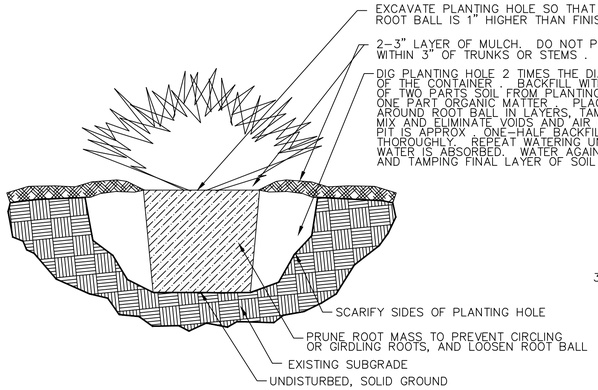

PLANTING DETAIL : CONTAINERIZED PLANTS
NOT TO SCALE

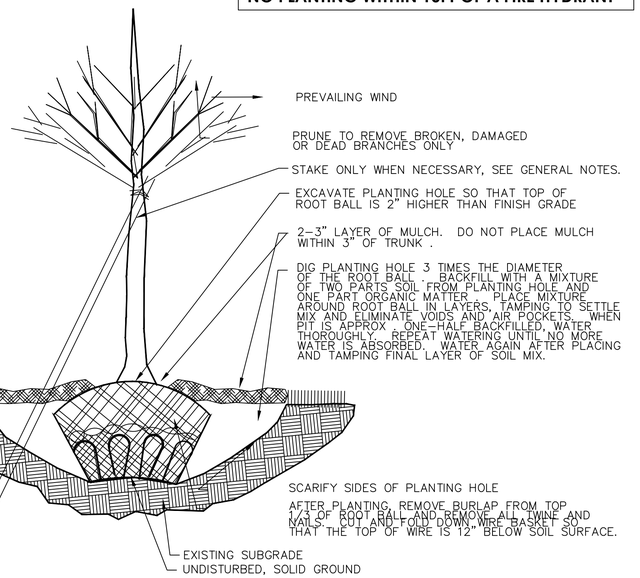

PLANTING DETAIL : BALLED AND BURLAPPED TREE
NOT TO SCALE

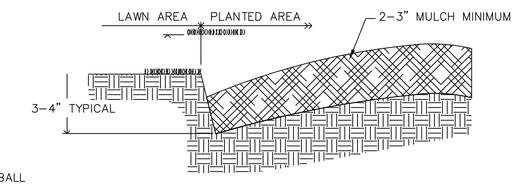

BED EDGE SHALL NOT BE ROUGH, BUT CLEAN, SMOOTH, AND CONTINUOUS AS SHOWN ON PLANS. MINOR FIELD ADJUSTMENTS ARE ALLOWED DUE TO UNEXPECTED OBSTRUCTIONS.

PLANTING DETAIL : BED EDGE
NOT TO SCALE

OHIO Utilities Protection SERVICE
811 or 1-800-362-2764 Call Before You Dig

NOTE:
UNDERGROUND UTILITIES ARE PLOTTED FROM A COMPILATION OF AVAILABLE RECORD INFORMATION AND SURFACE INDICATIONS OF UNDERGROUND STRUCTURES AND MAY NOT BE INCLUSIVE. PRECISE LOCATIONS AND THE EXISTENCE OR NON EXISTENCE OF UNDERGROUND UTILITIES CANNOT BE VERIFIED. PLEASE NOTIFY THE OHIO UTILITY PROTECTION SERVICE AT 1-800-362-2764 BEFORE ANY PERIOD OF EXCAVATION OR CONSTRUCTION ACTIVITY.

***Site will not be irrigated.
***All dead, damaged, or missing landscape materials will be replaced per the City of Dublin landscape code.
*** Any changes made to the approved plan will be approved by the City of Dublin
NO PLANTING WITHIN 10FT OF A FIRE HYDRANT

GF Gayle A. Frazer
Registered Landscape Architect

REVISIONS

SPECIFICATIONS AND PLANTING DETAILS
MARRIOTT HOTEL
LOT #4 UPPER METRO PLACE
CITY OF DUBLIN, FRANKLIN COUNTY, OHIO

SCALE: 1"=20'
DATE: MAY 2, 2017
DRAWN: WCD
DESIGNED: SAD
CHECKED: RVP
XREF:
JOB NO.: 16061

STONEHENGE DUBLIN HOTEL

Page
L300