GPD GROUP
Glaus, Pyle, Schomer, Burns & DeHaven, Inc.

Columbus Office
1801 Watermark Drive
Suite 210
Columbus, OH 43215
tel 614.210.0751
fax 614.210.0752
www.gpdgroup.com

City of Dublin
OHIO, USA

April 19, 2018
2017085.03

Addendum Date: April 19, 2018
Original Bid Due Date: April 24, 2018
ADDENDUM NO. 1

To the Plans and Specifications for
COFFMAN PARK – FESTIVAL ELECTRICAL, LIGHTING, AND DATA INFRASTRUCTURE PROJECT

To the Bidders of Record:

This Addendum modifies and forms a part of the BIDDING DOCUMENTS dated April 2018. Acknowledge receipt of this Addendum in the space provided herein and include with Bid Proposal. Failure to do so may subject the Bidder to disqualification.

A. Responses to Pre-Bid Meeting Questions / Discussion

a. How is the project paying for the new AEP transformers and "Make Ready" work?
   i. Response: The project has a $41,000 allowance for the AEP "Make Ready" work as specified in the Item 625 - Power Service, As Per Plan note on Sheet 4.

b. Are underdrains to be installed with pull boxes?
   i. Response: No underdrains are to be installed with pull boxes. Item 625 - Pull Box, Misc.: Pull Box, 725.06 note has been updated on sheet 4.

c. Is directional boring allowed in place of trenching?
   i. Response: Directional boring will be permitted as outlined on the Item 625 – Trench, As Per Plan updated note on sheet 4 and trench details on sheet 8.

d. The art lighting quantity has been updated to two (2) and additional installation notes have been added on sheet 5.

e. Can the CT unit be located in the AEP transformer enclosure instead of the electric meter cabinet?
   i. Response: Plan notes have been updated to specify that the CT unit be housed in the AEP transformer enclosure and the contractor shall coordinate with AEP during the "Make Ready" work. Notes have been updated on sheet 6.

f. How does the power service cable terminate at the location of the future well location? Currently the plans show cable in a conduit that is stubbed at the future well location.
   i. Response: Plans have been updated to add a pull box at the future well location and stub the empty conduit (without power service cable) from the new 480v breaker cabinet to the pull box location. Power service cable to be added by others and notes have been updated on sheets 5 and 7.

g. Estimated Project Construction Cost is as follows with the bidding remains lump sum:

Power Work	$253,154
Lighting Work	$176,628
Fiber (Data) Work	$ 36,822
Power Work (Pull Box 7 & 8)	$ 47,811
Total Estimate Project Cost	$514,415

B. Response to RFI's

a. RFI Question #1 - Are the power company transformers for MDP and DP1 existing? If not, where do the primary conduits come from so the power company can feed the transformers? Please advise.
   i. Response: No, the two transformers are to be installed by AEP and coordinated by the contractor per the Item 625 - Power Service, As Per Plan note on sheet 4 and notes on sheet 6. AEP is responsible for the primary conduit access to the switch box per existing conduit stubs or included with AEP "Make Ready" work. This applies to all three existing switch boxes on the project.

b. RFI Question #2 - I would like to request for the Pedestrian Light Pole, as detailed on plan page 4/10, if Nova Pole Industries would be considered as an approved equal to the specified Valmont and Sternberg light poles. Nova Pole Ind. Support # NPT8050C20AB-TB1-17 complies will all plan requirements as detailed, including the required Ohio PE Stamped Calculations for the required loading.
   i. Response: The above Pedestrian Light Pole approved equal request has been review and the Nova Pole Industries Support # NPT8050C20AB-TB1-17 is approved with a note update on sheet 4.

C. Bid Document Revisions

a. Revised plan sheets: 4, 5, 6, 7, 8, 9, 10.
b. Estimated quantities have been on Sheet 10 and bidding remains lump sum.

D. Bid Form Revisions

a. Bid Form page 2.2 has been updated to include Addendum No. 1 and Issue Date.

E. Attachments

a. Bid Form page 2.2
b. Complete 10 sheet plan set including revised plan sheets 4, 5, 6, 7, 8, 9, 10.

Please attach this Addendum to the copy of the bidding documents/construction plans in your possession and submit it with your bid. This addendum has the same force and effect as if it had been part of the bid documents originally issued.

Prepared by: GPD Group

Scott D. Seaman, PE

Received by (Print): _____

Signature: _____

Company: _____

Date: _____

END OF ADDENDUM No. 1

PROPOSAL

Coffman Park – Festival Electrical, Lighting, and Data Infrastructure Project

_____ (the "Bidder") submits this/these Proposal(s) having read and examined the contract documents, including but not limited to the Invitation to Bid; the City of Dublin, Ohio

All bids will be based upon elements indicated within the Drawings and Specifications. All changes to actual length, either additions or subtractions, will be through Change Order(s) using unit price(s) provided by contractor on proposal form.

Addenda Number	Date of Receipt
ADDENDUM NO. 1	APRIL 19, 2018 *
_____	_____
_____	_____

The Bidder proposes to provide portions or all of the above named COFFMAN PARK - FESTIVAL ELECTRICAL, LIGHTING, AND DATA INFRASTRUCTURE PROJECT in accordance with the contract documents for the following sum(s) [note: if no bid is to be offered on a particular contract, write "NO BID" in the places provided for entering figures and words]:

Total Base Bid (in figures): $_____

Total Base Bid (in words): $_____

_____

Unless otherwise specified in the Bid Document the amount of the total bid is based on the unit prices or lump sum set forth in the Bid Schedule attached hereto and incorporated herein.

The Bidder understands and agrees that delivery under the Agreement for **Coffman Park - Festival Electrical, Lighting, and Data Infrastructure Project** shall be completed by **July 13, 2018,** or as specified in bid documents unless an extension of time is granted by the **Director of Parks & Recreation**.

* Revised April 19, 2018

CITY OF DUBLIN, OHIO

COFFMAN PARK - FESTIVAL ELECTRICAL, LIGHTING, AND DATA INFRASTRUCTURE PROJECT

INDEX

PLANS ARE REQUIRED TO BE PRINTED IN COLOR TO FULLY CONVEY THE INTENT OF THE ENGINEERING DESIGN.

City of Dublin
OHIO, USA

VICINITY MAP
N.T.S.

VICINITY MAP
N.T.S.

ENGINEERS SEAL:

STATE OF OHIO
SCOTT D. SEAMAN
#E-68083
REGISTERED
PROFESSIONAL ENGINEER

Scott D. Seaman
REGISTERED ENGINEER

4-9-18
DATE

Ohio Utilities Protection Service
Call 811 before you dig

PLAN PREPARED BY:

GPD GROUP®
Glaus, Pyle, Schomer, Burns & DeHaven, Inc.
1801 Watermark Drive, Suite 210
Columbus, Ohio 43215
614.210.0751 Fax: 614.210.0752

STANDARD CONSTRUCTION DRAWINGS

CITY OF DUBLIN		ODOT	
SL-02		HL-30-11	1-19-18
SL-04			
SL-05			
SL-07			

REV. NO.	REVISION DESCRIPTION	SHEET OR SHEETS	INITIAL	DATE
1	ADDENDUM 1	4, 5, 6, 7, 8, 9, 10	SDS	4/19/18

4-5-18 FINAL SUBMITTAL

1-S	2-S	3-S
P.I.= Sta. 2+88.55	P.I.= Sta. 6+07.96	P.I.= Sta. 8+71.66
D = 73° 13′ 00″	D = 52° 32′ 39″	D = 85° 29′ 46″
Dc = 14° 57′ 35″	Dc = 24° 41′ 47″	Dc = 32° 00′ 32″
R = 383.000	R = 232.000	R = 179.000
T = 284.53′	T = 114.52′	T = 165.45′
L = 489.43′	L = 212.76′	L = 267.10′
E = 94.12	E = 26.73	E = 64.75
C = 456.80	C = 205.38	C = 243.00
C. B. = S 49° 27′ 22″ E	C. B. = S 59° 47′ 33″ E	C. B. = S 76° 16′ 06″ E
P. C. = STA. 4+04.02	P. R. C. = STA. 4+93.44	P. R. C. = STA. 7+06.20
P. R. C. = STA. 4+93.44	P. R. C. = STA. 7+06.20	P. T. = STA. 9+73.31

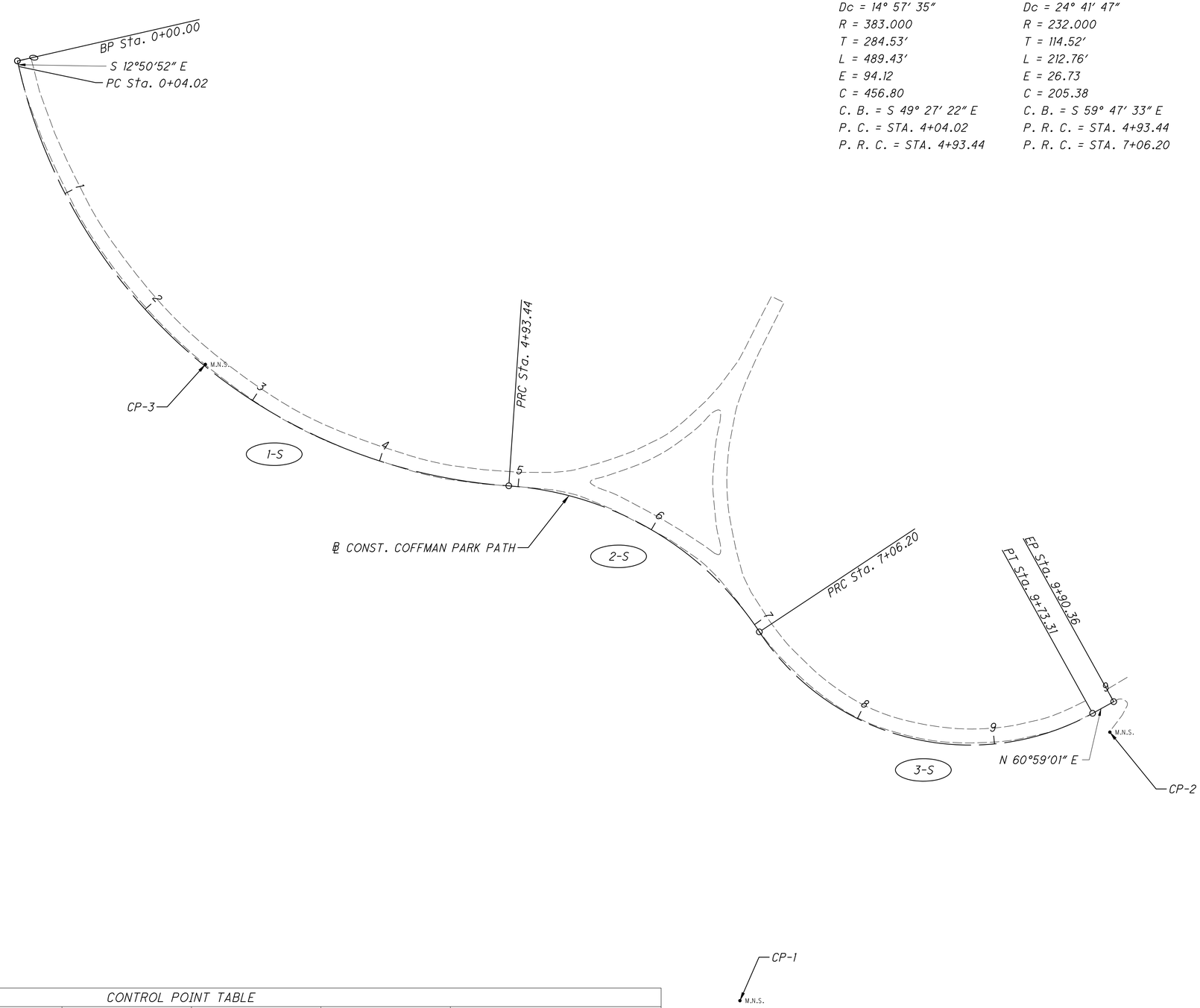

CONTROL POINT TABLE					
NAME	DESCRIPTION	NORTHING	EASTING	ELEVATION	CL STATION
CP-1	MAGNAIL SET	766233.9750	1790623.5100	882.52	8+06.58, 216.32′ RT.
CP-2	MAGNAIL SET	766424.0510	1790885.5530	882.92	9+77.40, 17.44′ RT.
CP-3	MAGNAIL SET	766684.4500	179024.8710	886.20	2+57.88, 1.05′ LT.

HORIZONTAL SCALE IN FEET
0 30 60 120

CALCULATED LMC
CHECKED SDS

HORIZONTAL AND VERTICAL CONTROL PLAN

COFFMAN PARK

GENERAL

1. CITY OF COLUMBUS AND OHIO DEPARTMENT OF TRANSPORTATION CONSTRUCTION AND MATERIAL SPECIFICATIONS, CURRENT EDITIONS, AND ANY SUPPLEMENTS THERETO (HEREAFTER REFERRED TO AS STANDARD SPECIFICATIONS), SHALL GOVERN ALL CONSTRUCTION ITEMS UNLESS OTHERWISE NOTED. THE CONTRACTOR SHALL FURNISH AND INSTALL THE COFFMAN PARK FESTIVAL ELECTRICAL, LIGHTING, AND DATA INFRASTRUCTURE IN COMPLIANCE WITH THESE PLANS AND SPECIFICATIONS. ITEM NUMBERS LISTED REFER TO CITY OF COLUMBUS ITEM NUMBERS UNLESS OTHERWISE NOTED.

   THE ELECTRICAL, LIGHTING AND DATA INFRASTRUCTURE IMPROVEMENTS SHALL MEET OR EXCEED THE STANDARDS SPECIFIED IN THE FOLLOWING DOCUMENTS:

   (A) CITY OF DUBLIN STANDARD DRAWINGS:
   (B) 2016 ODOT CONSTRUCTION AND MATERIAL SPECIFICATIONS AND ODOT STANDARD CONSTRUCTION DRAWINGS (FOR ALL LIGHTING ITEMS);
   (C) NATIONAL ELECTRIC CODE
   (D) 2012 CITY OF COLUMBUS CONSTRUCTION AND MATERIALS SPECIFICATIONS.

   IN CASE OF A CONFLICTING SPECIFICATION STATEMENT, THE SPECIFICATION DOCUMENT HIERARCHY SHALL BE IN THE ORDER LISTED FROM (A), HIGHEST, TO (D), LOWEST.

2. THE CITY ENGINEER WILL NOT BE RESPONSIBLE FOR MEANS, METHODS, PROCEDURES, TECHNIQUES, OR SEQUENCES OF CONSTRUCTION THAT ARE NOT SPECIFIED HEREIN. THE CITY ENGINEER WILL NOT BE RESPONSIBLE FOR SAFETY ON THE WORK SITE, OR FOR FAILURE BY THE CONTRACTOR TO PERFORM WORK ACCORDING TO CONTRACT DOCUMENTS.

3. (DELETED)

4. THE CONTRACTOR SHALL NOTIFY THE CITY OF DUBLIN DIVISION OF ENGINEERING IN WRITING AT LEAST 3 WORKING DAYS PRIOR TO BEGINNING CONSTRUCTION.

5. THE CONTRACTOR SHALL BE SOLELY RESPONSIBLE FOR COMPLYING WITH ALL FEDERAL, STATE AND LOCAL SAFETY REQUIREMENTS INCLUDING THE OCCUPATIONAL SAFETY AND HEALTH ACT OF 1970. THE CONTRACTOR SHALL EXERCISE PRECAUTION ALWAYS FOR THE PROTECTION OF PERSONS (INCLUDING EMPLOYEES) AND PROPERTY. IT SHALL ALSO BE THE SOLE RESPONSIBILITY OF THE CONTRACTOR TO INITIATE, MAINTAIN AND SUPERVISE ALL SAFETY REQUIREMENTS, PRECAUTIONS AND PROGRAMS IN CONNECTION WITH THE WORK, INCLUDING THE REQUIREMENTS FOR CONFINED SPACES PER 29 CFR 1910.146.

6. FOLLOWING COMPLETION OF CONSTRUCTION, A PROOF SURVEY SHALL BE PROVIDED BY THE CONTRACTOR TO THE DIVISION OF ENGINEERING THAT DOCUMENTS AS-BUILT INFORMATION OF ALL ELEMENTS OF THIS PROJECT. THE SURVEY SHALL BE PREPARED AND SIGNED BY AN OHIO PROFESSIONAL SURVEYOR. THE CONTRACTOR SHALL REVISE THE ORIGINAL MYLARS IN RED INK, TO THE SATISFACTION OF THE CITY, SHOWING ALL CHANGES IN THE WORK. THE COST OF THE PROOF SURVEY, INCLUDING MYLAR REVISIONS, WILL BE PAID AT THE LUMP SUM PRICE BID FOR ITEM SPECIAL, PROOF SURVEY.

7. THE CONTRACTOR SHALL RESTRICT CONSTRUCTION ACTIVITY TO PUBLIC RIGHT-OF-WAY AND AREAS DEFINED AS PERMANENT AND/OR TEMPORARY CONSTRUCTION EASEMENTS, UNLESS OTHERWISE AUTHORIZED BY THE CITY ENGINEER.

8. THE CONTRACTOR SHALL CAREFULLY PRESERVE BENCHMARKS, PROPERTY CORNERS, REFERENCE POINTS, STAKES AND OTHER SURVEY REFERENCE MONUMENTS OR MARKERS. IN CASES OF WILLFUL OR CARELESS DESTRUCTION, THE CONTRACTOR SHALL BE RESPONSIBLE FOR RESTORATIONS. RESETTING OF MARKERS SHALL BE PERFORMED BY AN OHIO PROFESSIONAL SURVEYOR AS APPROVED BY THE CITY ENGINEER.

9. NON-RUBBER TIRED VEHICLES SHALL NOT BE MOVED ON OR ACROSS PUBLIC STREETS OR HIGHWAYS WITHOUT THE WRITTEN PERMISSION OF THE CITY ENGINEER.

10. THE CONTRACTOR SHALL RESTORE ALL DISTURBED AREAS TO EQUAL OR BETTER CONDITION THAN EXISTED BEFORE CONSTRUCTION. DRAINAGE DITCHES OR WATERCOURSES THAT ARE DISTURBED BY CONSTRUCTION SHALL BE RESTORED TO THE GRADES AND CROSS-SECTIONS THAT EXISTED BEFORE CONSTRUCTION.

11. TRACKING OR SPILLING MUD, DIRT OR DEBRIS UPON STREETS, RESIDENTIAL OR COMMERCIAL DRIVES, SIDEWALKS OR BIKE PATHS IS PROHIBITED ACCORDING TO SECTION 97.38 OF THE DUBLIN CODE OF ORDINANCES. ANY SUCH OCCURRENCE SHALL BE CLEANED UP IMMEDIATELY BY THE CONTRACTOR AT NO COST TO THE CITY. IF THE CONTRACTOR FAILS TO REMOVE SAID MUD, DIRT, DEBRIS, OR SPILLAGE, THE CITY RESERVES THE RIGHT TO REMOVE THESE MATERIALS AND CLEAN AFFECTED AREAS, THE COST OF WHICH SHALL BE THE RESPONSIBILITY OF THE CONTRACTOR.

12. DISPOSAL OF EXCESS EXCAVATION WITHIN SPECIAL FLOOD HAZARD AREAS (100-YEAR FLOODPLAIN) IS NOT PERMITTED.

13. ALL SIGNS, LANDSCAPING, STRUCTURES OR OTHER APPURTENANCES WITHIN RIGHT-OF-WAY DISTURBED OR DAMAGED DURING CONSTRUCTION SHALL BE REPLACED OR REPAIRED TO THE SATISFACTION OF THE CITY ENGINEER. THE COST OF THIS WORK SHALL BE THE RESPONSIBILITY OF THE CONTRACTOR.

14. ALL FIELD TILE BROKEN OR ENCOUNTERED DURING EXCAVATION SHALL BE REPLACED OR REPAIRED AND CONNECTED TO THE PUBLIC STORM SEWER SYSTEM AS DIRECTED BY THE CITY ENGINEER. THE COST OF THIS WORK SHALL BE THE RESPONSIBILITY OF THE CONTRACTOR.

15. (DELETED)

16. BACKFILL WITHIN A 1:1 INFLUENCE LINE OF EXISTING STRUCTURES (HOUSES, GARAGES, ETC.) OR PUBLIC INFRASTRUCTURE (PAVEMENT, CURBS, SIDEWALKS, BIKE PATHS, ETC.) SHALL BE COMPACTED GRANULAR BACKFILL ACCORDING TO ITEM 912 OF THE STANDARD SPECIFICATIONS OR FLOWABLE CDF, TYPE III ACCORDING TO ITEM 636. ITEM 911 OF THE STANDARD SPECIFICATIONS SHALL BE USED ELSEWHERE.

17. (DELETED)

18. ALL TRENCHES WITHIN PUBLIC RIGHT-OF-WAY SHALL BE BACKFILLED ACCORDING TO THE APPROVED CONSTRUCTION DRAWINGS OR SECURELY PLATED DURING NONWORKING HOURS. TRENCHES OUTSIDE THESE AREAS SHALL BE BACKFILLED OR SHALL BE PROTECTED BY APPROVED TEMPORARY FENCING OR BARRICADES DURING NONWORKING HOURS. CLEAN UP SHALL FOLLOW CLOSELY BEHIND THE TRENCHING OPERATION.

19. ALL TREES WITHIN THE CONSTRUCTION AREA NOT SPECIFICALLY DESIGNATED FOR REMOVAL SHALL BE PRESERVED, WHETHER SHOWN OR NOT SHOWN ON THE APPROVED CONSTRUCTION DRAWINGS. TREES TO BE PRESERVED SHALL BE PROTECTED WITH HIGH VISIBILITY FENCING PLACED A MINIMUM 15 FEET FROM THE TREE TRUNK. TREES 6 - INCHES OR GREATER AT DBH (DIAMETER BREAST HEIGHT) MUST BE PROTECTED WITH FENCING PLACED AT THE CRITICAL ROOT ZONE OR 15 FEET, WHICHEVER IS GREATER. TREES NOT INDICATED ON THE APPROVED CONSTRUCTION DRAWINGS FOR REMOVAL MAY NOT BE REMOVED WITHOUT PRIOR APPROVAL OF THE DIVISION OF ENGINEERING.

20. CONDUIT MUST BE DIRECTIONALLY BORED ACROSS STREETS AND PAVED PATHS INSTEAD OF OPEN CUT, UNLESS SPECIFICALLY APPROVED BY THE CITY ENGINEER. USE OF PNEUMATIC AIR RAM DEVICES IS NOT PERMITTED. PERMITS TO CONSTRUCT IN THE RIGHT-OF-WAY OF EXISTING STREETS MUST BE OBTAINED FROM THE CITY OF DUBLIN DIVISION OF ENGINEERING BEFORE COMMENCING CONSTRUCTION. SHOULD OPEN CUTTING OF EXISTING PAVEMENT BE PERMITTED, CONTROLLED DENSITY BACKFILL (TYPE III) SHALL BE USED IN PLACE OF COMPACTED GRANULAR BACKFILL, ACCORDING TO ITEM 636 OF THE STANDARD SPECIFICATIONS.

21.

22. THE CONTRACTOR SHALL BE RESPONSIBLE FOR THE CONDITION OF TRENCHES WITHIN THE RIGHT-OF-WAY AND PUBLIC EASEMENTS FOR A PERIOD OF ONE YEAR FROM THE FINAL ACCEPTANCE OF THE WORK, AND SHALL MAKE ANY NECESSARY REPAIRS AT NO COST TO THE CITY.

22. PAVEMENTS SHALL BE CUT IN NEAT, STRAIGHT LINES THE FULL DEPTH OF THE EXISTING PAVEMENT, OR AS REQUIRED BY THE CITY ENGINEER. PAVEMENT REPLACEMENT SHALL BE CONDUCTED ACCORDING TO CITY OF COLUMBUS STANDARD DRAWING 1441 DR. A AND APPLICABLE CITY OF DUBLIN STANDARD DRAWINGS. THE REPLACEMENT OF DRIVEWAYS, HANDICAPPED RAMPS, SIDEWALKS, BIKE PATHS, PARKING LOT PAVEMENT, ETC. SHALL BE PROVIDED ACCORDING TO THE APPROVED CONSTRUCTION DRAWINGS AND CITY OF DUBLIN STANDARD CONSTRUCTION DRAWINGS.

23. TREE TRIMMING WITHIN THE CONSTRUCTION ZONE IS TO BE COMPLETED BY A CERTIFIED ARBORIST. AT THE COMPLETION OF THE PROJECT, THE ARBORIST IS TO RETURN AND TRIM ANY BROKEN BRANCHES AS NEEDED.

24. ANY MODIFICATION TO THE WORK SHOWN ON DRAWINGS MUST HAVE PRIOR WRITTEN APPROVAL BY THE CITY ENGINEER, CITY OF DUBLIN.

25. ALL INLETS SHALL BE CHANNELIZED.

26. PARK AREAS SHALL BE FINE-GRADED AND SEEDED WITH THE FOLLOWING MIXTURE:

    IMPROVED KENTUCKY BLUEGRASS: 40% OF WEIGHT (2 VARIETIES IN EQUAL PARTS) IMPROVED PERENNIAL RYE: 60% OF WEIGHT (2 VARIETIES IN EQUAL PARTS)
    GERMINATION RATE: 85%
    APPLICATION RATE: 7 LBS PER 1000 SQ FT OR AS DIRECTED BY THE DIVISION OF PARKS AND RECREATION, CITY OF DUBLIN, OHIO.

    CONTRACTOR IS RESPONSIBLE FOR PROVIDING WATER REQUIRED TO MEET THE SPECIFIED LAWN COVERAGE REQUIREMENTS.

27. (DELETED)

28. (DELETED)

UTILITIES

1. THE FOLLOWING UTILITIES ARE KNOWN TO BE LOCATED WITHIN THE LIMITS OF THIS PROJECT:

AMERICAN ELECTRIC POWER
5721 SHIER RINGS ROAD
DUBLIN, OHIO 43016
TEL: 614-932-1926
CELL: 614-398-9915
CONTACT: WILLIAM COULSON

CITY OF DUBLIN
DIVISION OF ENGINEERING
(WATER, SEWER, SANITARY)
6555 SHIER RINGS ROAD
DUBLIN, OHIO 43016
TEL: 614-410-4621
CONTACT: MIKE SWEDER, P.E.

CITY OF COLUMBUS
DIVISION OF WATER
910 DUBLIN ROAD
COLUMBUS, OHIO 43215
TEL: 614-645-7788

DUBLINK (TEAM FISHEL)
1600 WALCUTT ROAD
COLUMBUS, OHIO 43228
TEL: 614-921-8524
CELL: 614-395-9701
CONTACT: MATT BLACKSTONE

CITY OF DUBLIN
PARKS AND RECREATION
6555 SHIER RINGS ROAD
DUBLIN, OH 43016
TEL: 614-410-4707
CONTACT: SHAWN KRAWETZKI, PLA, ASLA, CPSI

COLUMBIA GAS
3550 JOHNNY APPLESEED COURT
COLUMBUS, OH 43230
TEL: 614-818-2113
CELL: 614-315-3770
CONTACT: MATT MYERS

2. THE CONTRACTOR SHALL GIVE NOTICE OF INTENT TO CONSTRUCT TO OHIO UTILITIES PROTECTION SERVICE (TELEPHONE NUMBER 800-362-2764), PRODUCER'S UNDERGROUND PROTECTION SERVICE (TELEPHONE NUMBER 614-587-0486), AND TO OWNERS OF UNDERGROUND UTILITIES THAT ARE NOT MEMBERS OF A REGISTERED UNDERGROUND PROTECTION SERVICE. NOTICE SHALL BE GIVEN AT LEAST 2 WORKING DAYS BEFORE START OF CONSTRUCTION.

3. THE IDENTITY AND LOCATIONS OF EXISTING UNDERGROUND UTILITIES IN THE CONSTRUCTION AREA HAVE BEEN SHOWN ON THE APPROVED CONSTRUCTION DRAWINGS AS ACCURATELY AS PROVIDED BY THE OWNER OF THE UNDERGROUND UTILITY. THE CITY OF DUBLIN AND THE CITY ENGINEER ASSUMES NO RESPONSIBILITY FOR THE ACCURACY OR DEPTHS OF UNDERGROUND FACILITIES SHOWN ON THE APPROVED CONSTRUCTION DRAWINGS. IF DAMAGE IS CAUSED, THE CONTRACTOR SHALL BE RESPONSIBLE FOR REPAIR OF THE SAME AND FOR ANY RESULTING CONTINGENT DAMAGE.

4. LOCATION, SUPPORT, PROTECTION AND RESTORATION OF ALL EXISTING UTILITIES AND APPURTENANCES, WHETHER SHOWN OR NOT SHOWN ON THE APPROVED CONSTRUCTION DRAWINGS, SHALL BE THE RESPONSIBILITY OF THE CONTRACTOR.

5. WHEN UNKNOWN OR INCORRECTLY LOCATED UNDERGROUND UTILITIES ARE ENCOUNTERED DURING CONSTRUCTION, THE CONTRACTOR SHALL IMMEDIATELY NOTIFY THE OWNER AND THE CITY ENGINEER.

6. PUBLIC STREET LIGHTING MAY BE IN THE VICINITY OF THIS PROJECT. CONTACT THE CITY OF DUBLIN, DIVISION OF ENGINEERING AT 410-4637, TWO DAYS PRIOR TO BEGINNING WORK.

TRAFFIC

1. TRAFFIC CONTROL SHALL BE FURNISHED, ERECTED, MAINTAINED, AND REMOVED BY THE CONTRACTOR ACCORDING TO OHIO MANUAL OF UNIFORM TRAFFIC CONTROL DEVICES (OMUTCD), CURRENT EDITION.

2. ALL TRAFFIC LANES OF PUBLIC ROADWAYS SHALL BE FULLY OPEN TO TRAFFIC FROM 7:00 AM TO 9:00 AM AND FROM 4:00 PM TO 6:00 PM UNLESS AUTHORIZED DIFFERENTLY BY THE CITY ENGINEER. AT ALL OTHER HOURS THE CONTRACTOR SHALL MAINTAIN MINIMUM ONE-LANE TWO-WAY TRAFFIC. UNIFORMED, OFF-DUTY POLICE OFFICERS SHALL REPLACE FLAGMEN DESIGNATED BY THE OMUTCD, AND SHALL BE PRESENT WHENEVER ONE-LANE, TWO-WAY TRAFFIC CONTROL IS IN EFFECT. POLICE CRUISERS MAY BE REQUIRED AS DIRECTED BY THE CITY ENGINEER.

3. IF THE CITY ENGINEER DETERMINES THAT THE CONTRACTOR IS NOT PROVIDING PROPER PROVISIONS FOR TRAFFIC CONTROL, THE CITY ENGINEER SHALL ASSIGN UNIFORMED, OFF-DUTY POLICE OFFICERS TO THE PROJECT AT NO COST TO THE CITY.

4. STEADY-BURNING, TYPE "C" LIGHTS SHALL BE REQUIRED ON ALL BARRICADES, DRUMS, AND SIMILAR TRAFFIC CONTROL DEVICES IN USE AT NIGHT.

5. ACCESS FROM PUBLIC ROADWAYS TO ALL ADJOINING PROPERTIES FOR EXISTING RESIDENTS OR BUSINESSES SHALL BE MAINTAINED THROUGHOUT THE DURATION OF THE PROJECT FOR MAIL, PUBLIC WATER AND SANITARY SEWER SERVICE, AND EMERGENCY VEHICLES. THE CONTRACTOR SHALL PROVIDE A TRAFFIC CONTROL PLAN DETAILING THE PROPOSED MAINTENANCE OF TRAFFIC PROCEDURES. THE TRAFFIC CONTROL PLAN MUST INCORPORATE ANY TRAFFIC CONTROL DETAILS CONTAINED HEREIN. THE TRAFFIC CONTROL PLAN PROPOSED BY THE CONTRACTOR MUST BE APPROVED BY THE CITY ENGINEER PRIOR TO CONSTRUCTION.

EROSION AND SEDIMENT CONTROL

1. THE CONTRACTOR OR DEVELOPER IS RESPONSIBLE FOR SUBMITTING A NOTICE OF INTENT (NOI) TO BE REVIEWED AND APPROVED BY THE OHIO EPA. THE NOI MUST BE SUBMITTED TO OEPA 45 DAYS PRIOR TO THE START OF CONSTRUCTION AND MAY ENTITLE COVERAGE UNDER THE OHIO EPA GENERAL PERMIT FOR STORMWATER DISCHARGES ASSOCIATED WITH CONSTRUCTION ACTIVITY. A PROJECT LOCATION MAP MUST BE SUBMITTED WITH THE NOI. A SEDIMENT AND EROSION CONTROL PLAN MUST BE SUBMITTED TO THE CITY ENGINEER FOR APPROVAL IF A SEDIMENT AND EROSION CONTROL PLAN HAS NOT ALREADY BEEN INCLUDED WITH THE APPROVED CONSTRUCTION DRAWINGS. THIS PLAN MUST BE MADE AVAILABLE AT THE PROJECT SITE AT ALL TIMES. THE DESIGN OF EROSION CONTROL SYSTEMS SHALL FOLLOW THE REQUIREMENTS OF OHIO EPA, ITEM 207 OF OHIO DEPARTMENT OF TRANSPORTATION STANDARD SPECIFICATIONS, AND THE CITY ENGINEER. AN INDIVIDUAL NPDES STORMWATER DISCHARGE PERMIT MAY BE REQUIRED. THE CONTRACTOR SHALL BE CONSIDERED THE PERMITTEE.

2. THE CONTRACTOR SHALL PROVIDE SEDIMENT CONTROL AT ALL POINTS WHERE STORM WATER RUNOFF LEAVES THE PROJECT, INCLUDING WATERWAYS, OVERLAND SHEET FLOW, AND STORM SEWERS.

3. ACCEPTED METHODS OF PROVIDING EROSION/SEDIMENT CONTROL INCLUDE BUT ARE NOT LIMITED TO: SEDIMENT BASINS, SILT FILTER FENCE, AGGREGATE CHECK DAMS, AND TEMPORARY GROUND COVER. HAY OR STRAW BALES ARE NOT PERMITTED.

4. THE CONTRACTOR SHALL PROVIDE ADEQUATE DRAINAGE OF THE WORK AREA AT ALL TIMES CONSISTENT WITH EROSION CONTROL PRACTICES.

5. DISTURBED AREAS THAT WILL REMAIN UNWORKED FOR 30 DAYS OR MORE SHALL BE SEEDED OR PROTECTED WITHIN SEVEN CALENDAR DAYS OF THE DISTURBANCE. OTHER SEDIMENT CONTROLS THAT ARE INSTALLED SHALL BE MAINTAINED UNTIL VEGETATIVE GROWTH HAS BEEN ESTABLISHED. THE CONTRACTOR SHALL BE RESPONSIBLE FOR THE REMOVAL OF ALL TEMPORARY SEDIMENT DEVICES AT THE CONCLUSION OF CONSTRUCTION BUT NOT BEFORE GROWTH OF PERMANENT GROUND COVER.

BLASTING (If Permitted)

1. (DELETED)

SANITARY SEWERS

1. TO 20. (DELETED)

WATER LINE

1. TO 17. (DELETED)

STORM SEWER

1. TO 7. (DELETED)

MAIL DELIVERY

1. (DELETED)
2. (DELETED)

USE OF FIRE HYDRANTS

1. (DELETED)
2. (DELETED)

REVISIONS		
NO.	DESCRIPTION	DATE
1	ADDENDUM 1	4/19/18

ITEM 625 – LUMINAIRE, (BY LED SIZE), AS PER PLAN

LUMINAIRES SHALL BE LED WITH A TYPE III DISTRIBUTION AND MANUFACTURED BY CREE (EDGE AREA LED, MODEL ARE-EDR-3M-R5-06-E-UL-BZ-700-40K-P), NOVA POLE INDUSTRIES (SIMILAR TO DRAWING NO. NPT 8050C20AB-TB1) OR APPROVED EQUAL. LUMINAIRES SHALL BE MULTIPLE LEDS, DIRECT MOUNTED WITH 120 VOLT SINGLE PHASE POWER. LUMINAIRES SHALL BE POWDER COATED BLACK TO MEET FEDERAL SPECIFICATION NO. 595B AND CONFORM TO COLOR NO. 27038. PHOTOCELL SHALL BE INTEGRAL TO THE FIXTURE. THE COATING SHALL INCLUDE A 5 YEAR WARRANTY.

PAYMENT SHALL BE MADE PER ITEM 625 AT THE UNIT PRICE FOR EACH LUMINAIRE INSTALLED.

ITEM 625 – LUMINAIRE, MISC.: ART WORK LUMINAIRE, (BY LED SIZE), AS PER PLAN

LUMINAIRES SHALL BE MANUFACTURED BY LITHONIA – (MODEL OLBF 8 50K MVOLT DDB) OR APPROVED EQUAL AND HAVE A LED LUMINAIRE WITH 5X4 FLOOD OPTICS DISTRIBUTION (AS SPECIFIED ON THE LIGHTING PLAN DETAIL SHEETS). LUMINAIRES SHALL BE MULTIPLE LED, GROUND MOUNTED WITH 120 VOLT SINGLE PHASE POWER. LUMINAIRES SHALL BE POWDER COATED BLACK TO MEET FEDERAL SPECIFICATION NO. 595B AND CONFORM TO COLOR NO. 27038. THE COATING SHALL INCLUDE A 5 YEAR WARRANTY.

PAYMENT SHALL BE MADE PER ITEM 625 AT THE UNIT PRICE FOR EACH LUMINAIRE INSTALLED.

ITEM 625 – POWER SERVICE, AS PER PLAN

POWER SERVICE SHALL BE PROVIDED IN ACCORDANCE WITH ODOT C&MS 625 AND 725. ELECTRIC POWER SHALL BE OBTAINED FROM AEP AT THE LOCATIONS INDICATED ON THE PLANS. CONTRACTOR SHALL COORDINATE WITH AEP (WILL COULSON, 614-932-1926). POWER SUPPLIED SHALL BE 480V AND 208V, 3 PHASE AND SHALL BE METERED.

CONTRACTOR TO COORDINATE WITH THE CITY TO OBTAIN THE SERVICE ADDRESS FOR THE NEW POWER SERVICE. CONTACT SHAWN KRAWETZKI AT 614-410-4707.

THIS PAY ITEM INCLUDES A TOTAL AEP "MAKE READY" COST ALLOWANCE OF $41,000 FOR THE PROJECT. THE CONTRACTOR IS RESPONSIBLE FOR PAYMENT OF THE AEP "MAKE READY" INVOICE TO PROVIDE (1)-480V, 3PH AND (4)-208V, 3PH TRANSFORMERS AS INDICATED IN THE PLANS. CONTRACTOR WILL SUBMIT THE AEP INVOICE FOR REIMBURSEMENT. THE CITY WILL RECEIVE A REFUND FROM THE CONTRACTOR OR PAY THE DIFFERENCE TO THE CONTRACTOR BASED ON THE SET ALLOWANCE OF $41,000.

PAYMENT FOR THIS ITEM SHALL BE AT THE UNIT PRICE BID PER EACH COMPLETE AND IN PLACE, ALL CONNECTIONS TESTED AND ACCEPTED.

ITEM 625 – LIGHT POLE FOUNDATION, AS PER PLAN

FOUNDATION SHALL CONFORM WITH CITY OF DUBLIN STANDARD CONSTRUCTION DRAWING SL-04 AND THE DETAILS PROVIDED HEREIN. ALL ROCK EXCAVATION REQUIRED TO PROVIDE FOUNDATION DEPTH AS SPECIFIED AS IN SL-04 SHALL BE CONSIDERED INCIDENTAL TO THIS ITEM OF WORK.

PAYMENT SHALL BE AS PER ITEM 625.

ITEM 625 – CONDUIT, JACKED OR BORED, 725.051 (BY SIZE), AS PER PLAN

IN ADDITION TO THE SPECIFICATIONS OF ODOT C&MS 625 AND 725, ALL CONDUIT BORED UNDER PAVED PATHS SHALL BE SCHEDULE 80.

PAYMENT FOR THIS ITEM SHALL BE MADE AT THE UNIT PRICE BID PER LINEAR FOOT.

ITEM 625 – CONDUIT, MISC.: CONDUIT SLEEVE, (BY SIZE), SCHEDULE 80 PVC

IN ADDITION TO THE SPECIFICATIONS OF ODOT C&MS 625 AND 725, CONDUIT SLEEVES SHALL BE SCHEDULE 80 PVC AND SHALL EXTEND 3 FEET BEYOND ASPHALT PATHS OR DRIVEWAY APPROACHES.

PAYMENT FOR THIS ITEM SHALL BE MADE AT THE UNIT PRICE BID PER LINEAR FOOT.

ITEM 625 – PULL BOX, MISC.: PULL BOX, 725.06

IN ADDITION TO THE SPECIFICATIONS OF ODOT ITEM 625, THE UNIT SUPPLIED AND INSTALLED SHALL BE A HUBBELL POWER SYSTEMS, PART NUMBER QUAZITE PG2424BA24 OR APPROVED EQUAL. PULL BOX SHALL CARRY AN ANSI 77, T22 RATING. OVERALL DIMENSIONS OF THE PULL BOX SHALL BE 24" WIDE BY 24" LONG BY 24" DEEP. "ELECTRIC" SHALL BE ON RAISED LETTERS OR EMBOSSED LETTERS ON THE PULL BOX COVER. UNDERDRAINS ARE NOT TO BE INSTALLED. LIQUID TIGHT CONDUIT AND FITTINGS PER THE PLAN DETAILS SHALL BE CONSIDERED INCIDENTAL TO THIS PAY ITEM.

PAYMENT FOR THIS ITEM SHALL BE AT THE UNIT PRICE BID, COMPLETE, IN PLACE AND ACCEPTED.

ITEM 625 – PLASTIC CAUTION TAPE, AS PER PLAN

IN ADDITION TO ITEM 625 AND 725 OF THE ODOT STANDARD SPECIFICATIONS, THE FOLLOWING SHALL ALSO APPLY:

THE TAPE SHALL BE THREE (3") RED PLASTIC CAUTION TAPE WITH BLACK LETTERING. THE TAPE SHALL BE INSTALLED OVER ALL 725.05 CONDUIT, OUTSIDE OF DRIVEWAYS AND ROADWAYS. AS PER CITY SPECIFICATIONS.

PAYMENT FOR THIS ITEM SHALL BE AT THE UNIT PRICE BID FOR THIS ITEM, COMPLETE AND IN PLACE.

ITEM 625 – LIGHT POLE, AS PER PLAN

LIGHT POLES SHALL BE MANUFACTURED BY VALMONT (SIMILAR TO DRAWING NO. QT99313), STERNBERG OR APPROVED EQUAL, CONFORM WITH THE DETAILS SHOWN ON SHEET 9, PROVIDE FOR A 3" TENON PER THE LUMINAIRE MANUFACTURER'S RECOMMENDATIONS, PROVIDE FOR A 17" TRANSFORMER BASE PER MANUFACTURER'S RECOMMENDATION AND SHALL BE SHOWN ON THE PLANS. LIGHT POLES AND TRANSFORMER BASES SHALL BE POWDER COATED BLACK TO MEET FEDERAL SPECIFICATION NO. 595B AND CONFORM TO COLOR NO. 27038. THE COATING SHALL INCLUDE A 5 YEAR WARRANTY.

IN ADDITION TO THE REQUIREMENTS OF ITEM 625, LIGHT POLE STRUCTURES SHALL BE DESIGNED AND CONSTRUCTED BY THE SUPPLIER TO SUPPORT THE LOADS THAT THE PLAN REQUIRES THE CONTRACTOR TO INSTALL. THE USE OF STANDARD DESIGN DESIGNATIONS AND ANY DETAILS PROVIDED IN THIS PLAN ARE INTENDED TO PROMOTE UNIFORMITY OF DESIGN AND ARE NOT WARRANTED TO BE STRUCTURALLY ADEQUATE. THE CONTRACTOR SHALL VERIFY THE ANCHOR BOLT CIRCLE, ANCHOR BOLT DIAMETER AND ORIENTATION PATTERN WITH THE LIGHT POLE MANUFACTURER. THE MANUFACTURER SHALL BE RESPONSIBLE FOR VERIFYING THE POLE DESIGN, AND SHALL PREPARE SHOP DRAWINGS AND STRUCTURAL DESIGN CALCULATIONS STAMPED BY AN OHIO PROFESSIONAL ENGINEER. THE SHOP DRAWINGS AND CALCULATIONS SHALL BE SUBMITTED TO THE CITY OF DUBLIN FOR APPROVAL PRIOR TO FABRICATION.

PAYMENT SHALL BE MADE PER ITEM 625 AT THE UNIT PRICE FOR EACH LIGHT POLE INSTALLED.

ITEM 625 – PULL BOX, MISC.: PULL BOX COVER, 725.06

IN ADDITION TO THE SPECIFICATIONS OF ODOT C&MS 625 AND 725, THE PULL BOX COVER SHALL BE COMPATIBLE WITH THE UNITS INSTALLED WITH THIS PROJECT, HUBBELL POWER SYSTEMS PART NUMBER QUAZITE PG2424BA24 OR APPROVED EQUAL. "ELECTRIC" SHALL BE ON RAISED OR EMBOSSED LETTERS ON THE PULL BOX COVER.

THE PULL BOX COVER SHALL HAVE A 4" OPENING FOR CABLE CONNECTIONS. THE REQUIRED NUMBER OF GROMMETS TO FASTEN THE COVER TO THE PULL BOX SHALL BE INCLUDED AND INCIDENTAL TO THIS PAY ITEM.

PAYMENT FOR THIS ITEM SHALL BE AT THE UNIT PRICE BID, COMPLETE, IN PLACE AND ACCEPTED.

ITEM 625 – TRENCH, AS PER PLAN

ALL TRENCHING SHALL CONFORM WITH CITY OF DUBLIN STANDARD CONSTRUCTION DRAWING SL-05 AND THE DETAILS PROVIDED ON SHEET 8 . ALL ROCK EXCAVATION REQUIRED TO PROVIDE FOUNDATION DEPTH AS SPECIFIED IN SL-05 SHALL BE CONSIDERED INCIDENTAL TO THIS ITEM OF WORK. THE INCLUSION OF SAND BEDDING, TOP SOIL AND THE REMOVAL AND DISPOSAL OF ANY EXCESS CLEAN EXCAVATION SHALL BE CONSIDERED INCIDENTAL TO THIS PAY ITEM. DIRECTIONAL BORING THAT MEETS ALL THE TRENCHING DEPTH & CLEARANCE REQUIREMENTS AS SHOWN ON SHEET 8 SHALL BE ALLOWED ON THE PROJECT IF IT CAN BE SHOWN TO BE FINANCIALLY BENEFICIAL TO THE PROJECT. SAND BEDDING WILL NOT BE REQUIRED NOR WILL TOPSOIL & SEEDING IN THE NON DISTURBED BORED AREA.

PAYMENT SHALL BE AS PER ITEM 625.

CALCULATED LMC
CHECKED SDS

GENERAL NOTES
SHEET 2

COFFMAN PARK

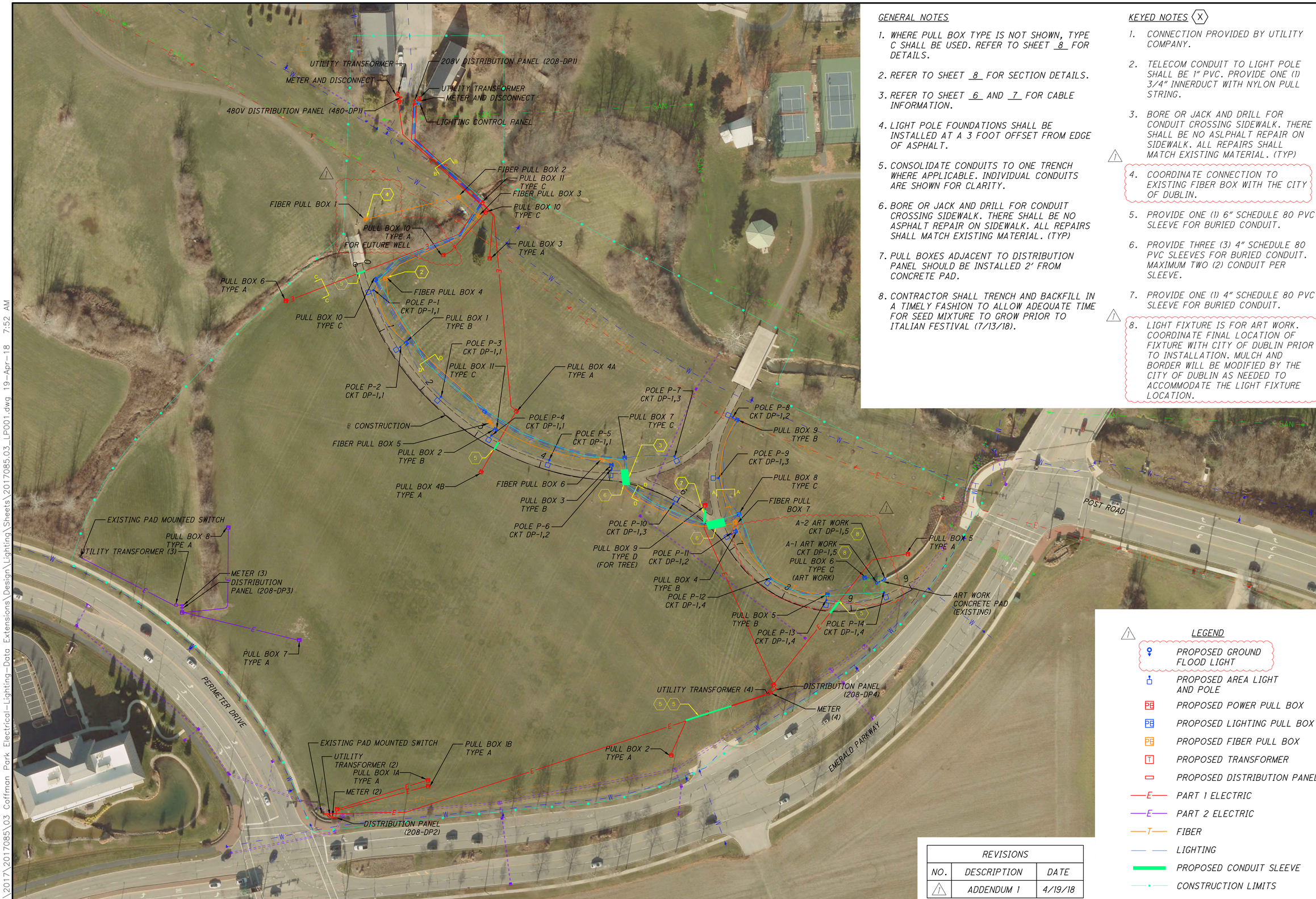

GENERAL NOTES

1. WHERE PULL BOX TYPE IS NOT SHOWN, TYPE C SHALL BE USED. REFER TO SHEET 8 FOR DETAILS.
2. REFER TO SHEET 8 FOR SECTION DETAILS.
3. REFER TO SHEET 6 AND 7 FOR CABLE INFORMATION.
4. LIGHT POLE FOUNDATIONS SHALL BE INSTALLED AT A 3 FOOT OFFSET FROM EDGE OF ASPHALT.
5. CONSOLIDATE CONDUITS TO ONE TRENCH WHERE APPLICABLE. INDIVIDUAL CONDUITS ARE SHOWN FOR CLARITY.
6. BORE OR JACK AND DRILL FOR CONDUIT CROSSING SIDEWALK. THERE SHALL BE NO ASPHALT REPAIR ON SIDEWALK. ALL REPAIRS SHALL MATCH EXISTING MATERIAL. (TYP)
7. PULL BOXES ADJACENT TO DISTRIBUTION PANEL SHOULD BE INSTALLED 2' FROM CONCRETE PAD.
8. CONTRACTOR SHALL TRENCH AND BACKFILL IN A TIMELY FASHION TO ALLOW ADEQUATE TIME FOR SEED MIXTURE TO GROW PRIOR TO ITALIAN FESTIVAL (7/13/18).

KEYED NOTES (X)

1. CONNECTION PROVIDED BY UTILITY COMPANY.
2. TELECOM CONDUIT TO LIGHT POLE SHALL BE 1" PVC. PROVIDE ONE (1) 3/4" INNERDUCT WITH NYLON PULL STRING.
3. BORE OR JACK AND DRILL FOR CONDUIT CROSSING SIDEWALK. THERE SHALL BE NO ASLPHALT REPAIR ON SIDEWALK. ALL REPAIRS SHALL MATCH EXISTING MATERIAL. (TYP)
4. COORDINATE CONNECTION TO EXISTING FIBER BOX WITH THE CITY OF DUBLIN. (1)
5. PROVIDE ONE (1) 6" SCHEDULE 80 PVC SLEEVE FOR BURIED CONDUIT.
6. PROVIDE THREE (3) 4" SCHEDULE 80 PVC SLEEVES FOR BURIED CONDUIT. MAXIMUM TWO (2) CONDUIT PER SLEEVE.
7. PROVIDE ONE (1) 4" SCHEDULE 80 PVC SLEEVE FOR BURIED CONDUIT.
8. LIGHT FIXTURE IS FOR ART WORK. COORDINATE FINAL LOCATION OF FIXTURE WITH CITY OF DUBLIN PRIOR TO INSTALLATION. MULCH AND BORDER WILL BE MODIFIED BY THE CITY OF DUBLIN AS NEEDED TO ACCOMMODATE THE LIGHT FIXTURE LOCATION. (1)

LEGEND

- PROPOSED GROUND FLOOD LIGHT
- PROPOSED AREA LIGHT AND POLE
- PROPOSED POWER PULL BOX
- PROPOSED LIGHTING PULL BOX
- PROPOSED FIBER PULL BOX
- PROPOSED TRANSFORMER
- PROPOSED DISTRIBUTION PANEL
- PART 1 ELECTRIC
- PART 2 ELECTRIC
- FIBER
- LIGHTING
- PROPOSED CONDUIT SLEEVE
- CONSTRUCTION LIMITS

REVISIONS		
NO.	DESCRIPTION	DATE
1	ADDENDUM 1	4/19/18

HORIZONTAL SCALE IN FEET 0 30 60 120

CALCULATED LMC CHECKED SDS

ELECTRICAL DISTRIBUTION PLAN

COFFMAN PARK

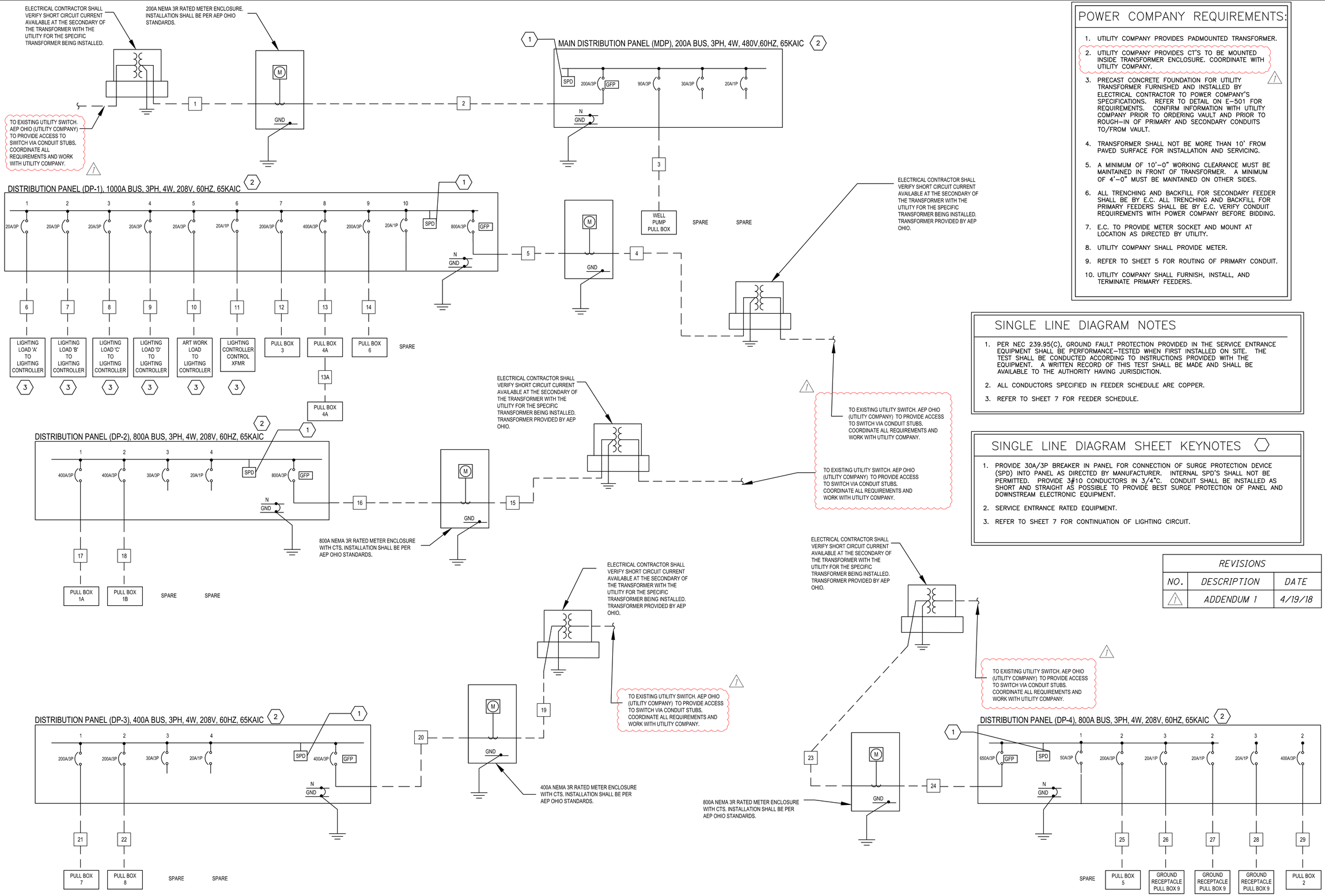

POWER COMPANY REQUIREMENTS:

1. UTILITY COMPANY PROVIDES PADMOUNTED TRANSFORMER.
2. UTILITY COMPANY PROVIDES CT'S TO BE MOUNTED INSIDE TRANSFORMER ENCLOSURE. COORDINATE WITH UTILITY COMPANY.
3. PRECAST CONCRETE FOUNDATION FOR UTILITY TRANSFORMER FURNISHED AND INSTALLED BY ELECTRICAL CONTRACTOR TO POWER COMPANY'S SPECIFICATIONS. REFER TO DETAIL ON E-501 FOR REQUIREMENTS. CONFIRM INFORMATION WITH UTILITY COMPANY PRIOR TO ORDERING VAULT AND PRIOR TO ROUGH-IN OF PRIMARY AND SECONDARY CONDUITS TO/FROM VAULT.
4. TRANSFORMER SHALL NOT BE MORE THAN 10' FROM PAVED SURFACE FOR INSTALLATION AND SERVICING.
5. A MINIMUM OF 10'-0" WORKING CLEARANCE MUST BE MAINTAINED IN FRONT OF TRANSFORMER. A MINIMUM OF 4'-0" MUST BE MAINTAINED ON OTHER SIDES.
6. ALL TRENCHING AND BACKFILL FOR SECONDARY FEEDER SHALL BE BY E.C. ALL TRENCHING AND BACKFILL FOR PRIMARY FEEDERS SHALL BE BY E.C. VERIFY CONDUIT REQUIREMENTS WITH POWER COMPANY BEFORE BIDDING.
7. E.C. TO PROVIDE METER SOCKET AND MOUNT AT LOCATION AS DIRECTED BY UTILITY.
8. UTILITY COMPANY SHALL PROVIDE METER.
9. REFER TO SHEET 5 FOR ROUTING OF PRIMARY CONDUIT.
10. UTILITY COMPANY SHALL FURNISH, INSTALL, AND TERMINATE PRIMARY FEEDERS.

SINGLE LINE DIAGRAM NOTES

1. PER NEC 239.95(C), GROUND FAULT PROTECTION PROVIDED IN THE SERVICE ENTRANCE EQUIPMENT SHALL BE PERFORMANCE-TESTED WHEN FIRST INSTALLED ON SITE. THE TEST SHALL BE CONDUCTED ACCORDING TO INSTRUCTIONS PROVIDED WITH THE EQUIPMENT. A WRITTEN RECORD OF THIS TEST SHALL BE MADE AND SHALL BE AVAILABLE TO THE AUTHORITY HAVING JURISDICTION.
2. ALL CONDUCTORS SPECIFIED IN FEEDER SCHEDULE ARE COPPER.
3. REFER TO SHEET 7 FOR FEEDER SCHEDULE.

SINGLE LINE DIAGRAM SHEET KEYNOTES

1. PROVIDE 30A/3P BREAKER IN PANEL FOR CONNECTION OF SURGE PROTECTION DEVICE (SPD) INTO PANEL AS DIRECTED BY MANUFACTURER. INTERNAL SPD'S SHALL NOT BE PERMITTED. PROVIDE 3#10 CONDUCTORS IN 3/4"C. CONDUIT SHALL BE INSTALLED AS SHORT AND STRAIGHT AS POSSIBLE TO PROVIDE BEST SURGE PROTECTION OF PANEL AND DOWNSTREAM ELECTRONIC EQUIPMENT.
2. SERVICE ENTRANCE RATED EQUIPMENT.
3. REFER TO SHEET 7 FOR CONTINUATION OF LIGHTING CIRCUIT.

REVISIONS		
NO.	DESCRIPTION	DATE
1	ADDENDUM 1	4/19/18

CALCULATED LMC
CHECKED SDS

ONE LINE DIAGRAM

COFFMAN PARK

FEEDER SCHEDULE

TAG	CONDUIT AND CABLE	LOAD AMPERAGE	CABLE LENGTH (FT)	TO	FROM	NOTES
1	ONE (1) 2-1/2" CONDUIT FOR ONE (1) SET OF 4#250KCMIL 90°, XHHWN COPPER CONDUCTORS. NO GROUNDING ELECTRODE CONDUCTOR REQUIRED FOR SECONDARY FEEDERS.	200	20	480V METER	UTILITY TRANSFORMER	
2	ONE (1) 2-1/2" CONDUIT FOR ONE (1) SET OF 4#250 KCMIL 90°, XHHWN COPPER CONDUCTORS. NO GROUNDING ELECTRODE CONDUCTOR REQUIRED FOR SECONDARY FEEDERS.	200	5	MDP	480V METER	
3	1-1/2" C	52	320	MDP	WELL PUMP	CABLE PROVIDED BY OTHERS. PULL STRING SHALL BE PROVIDED IN CONDUIT.
4	TWO(2) 4" CONDUIT FOR TWO (2) SETS OF 4#500KCMIL 90°, XHHWN COPPER CONDUCTORS. NO GROUNDING ELECTRODE CONDUCTOR REQUIRED FOR SECONDARY FEEDERS.	800	15	UTILITY TRANSFORMER (1)	208V METER (1)	
5	TWO(2) 4" CONDUIT FOR TWO (2) SETS OF 4#500KCMIL 90°, XHHWN COPPER CONDUCTORS. NO GROUNDING ELECTRODE CONDUCTOR REQUIRED FOR SECONDARY FEEDERS.	800	15	208V METER (1)	DP-1	
6	2#12 AWG, 1 #12 GND, 1"C	14.5	10	LIGHTING CABINET	DP-1	
7	2#12 AWG, 1 #12 GND, 1"C	9.15	10	LIGHTING CABINET	DP-1	
8	2#12 AWG, 1 #12 GND, 1"C	8.4	10	LIGHTING CABINET	DP-1	
9	2#12 AWG, 1 #12 GND, 1"C	8.65	10	LIGHTING CABINET	DP-1	
10	2#12 AWG, 1 #12 GND, 1"C	4.6	10	LIGHTING CABINET	DP-1	
11	2#12 AWG, 1 #12 GND, 1"C	15	10	LIGHTING CABINET	DP-1	
12	4#4/0 AWG, 1#4 GND, 2-1/2"C	173	289	PULL BOX 3	DP-1	
13	4#500 KCMIL, 1#3 GND, 4" C	355	510	PULL BOX 4A	DP-1	VOLTAGE DROP FOR THIS RUN IS 7% DUE TO SOURCE LOCATION AND LOAD. TYPE W - 4#4/0 AWG, 1#3GND.
13A	4#500 KCMIL, 1#3 GND, 4" C	355	115	PULL BOX 4B	PULL BOX 4A	VOLTAGE DROP FOR THIS RUN IS 8.2% DUE TO SOURCE LOCATION AND LOAD. TYPE W - 4#4/0 AWG, 1#3GND.
14	4#500 KCMIL, 1#3 GND, 4" C	173	515	PULL BOX 6	DP-1	CABLE SIZE INCREASE DUE TO VOLTAGE DROP. TYPE W - 4#1 AWG, 1#6GND.
15	TWO(2) 4" CONDUIT FOR TWO (2) SETS OF 4#500KCMIL 90°, XHHWN COPPER CONDUCTORS. NO GROUNDING ELECTRODE CONDUCTOR REQUIRED FOR SECONDARY FEEDERS.	760	15	UTILITY TRANSFORMER (2)	208V METER (2)	
16	TWO(2) 4" CONDUIT FOR TWO (2) SETS OF 4#500KCMIL 90°, XHHWN COPPER CONDUCTORS. NO GROUNDING ELECTRODE CONDUCTOR REQUIRED FOR SECONDARY FEEDERS.	760	5	208V METER (2)	DP-2	
17	4#500 KCMIL, 1#3 GND, 4" C	355	155	PULL BOX 1A	DP-2	TYPE W - 4#1 AWG, 1#6GND.
18	4#500 KCMIL, 1#3 GND, 4" C	355	150	PULL BOX 1B	DP-2	TYPE W - 4#1 AWG, 1#6GND.
19	ONE (1) 4" CONDUIT FOR ONE (1) SET OF 4#500KCMIL 90°, XHHWN COPPER CONDUCTORS. NO GROUNDING ELECTRODE CONDUCTOR REQUIRED FOR SECONDARY FEEDERS.	370	15	UTILITY TRANSFORMER (3)	208V METER (3)	
20	ONE (1) 4" CONDUIT FOR ONE (1) SET OF 4#500KCMIL 90°, XHHWN COPPER CONDUCTORS. NO GROUNDING ELECTRODE CONDUCTOR REQUIRED FOR SECONDARY FEEDERS.	370	5	208V METER (3)	DP-3	
21	4#4/0 AWG, 1#4 GND, 2-1/2"C	173	190	PULL BOX 7	DP-3	TYPE W - 4#1 AWG, 1#6GND.
22	4#4/0 AWG, 1#4 GND, 2-1/2"C	173	200	PULL BOX 8	DP-3	TYPE W - 4#1 AWG, 1#6GND.
23	TWO(2) 3" CONDUIT FOR TWO (2) SETS OF 4#350 KCMIL 90°, XHHWN COPPER CONDUCTORS. NO GROUNDING ELECTRODE CONDUCTOR REQUIRED FOR SECONDARY FEEDERS.	580	5	UTILITY TRANSFORMER (4)	208V METER (4)	
24	TWO(2) 3" CONDUIT FOR TWO (2) SETS OF 4#350 KCMIL 90°, XHHWN COPPER CONDUCTORS. NO GROUNDING ELECTRODE CONDUCTOR REQUIRED FOR SECONDARY FEEDERS.	580	5	208V METER (4)	DP-4	
25	4#250 KCMIL, 1#4 GND, 2-1/2"C	173	295	PULL BOX 5	DP-4	CABLE SIZE INCREASE DUE TO VOLTAGE DROP. TYPE W - 4#1 AWG, 1#6GND.
26	2#4 AWG, 1#10 GND, 1"C	16	295	PULL BOX 9 (RECEPTACLE)	DP-4	CABLE SIZE INCREASE DUE TO VOLTAGE DROP
27	2#4 AWG, 1#10 GND, 1"C	16	295	PULL BOX 9 (RECEPTACLE)	DP-4	CABLE SIZE INCREASE DUE TO VOLTAGE DROP
28	2#4 AWG, 1#10 GND, 1"C	16	295	PULL BOX 9 (RECEPTACLE)	DP-4	CABLE SIZE INCREASE DUE TO VOLTAGE DROP
29	4#500 KCMIL, 1#4 GND, 4"C	355	195	PULL BOX 2	DP-4	TYPE W - 4#4/0 AWG, 1#3GND.

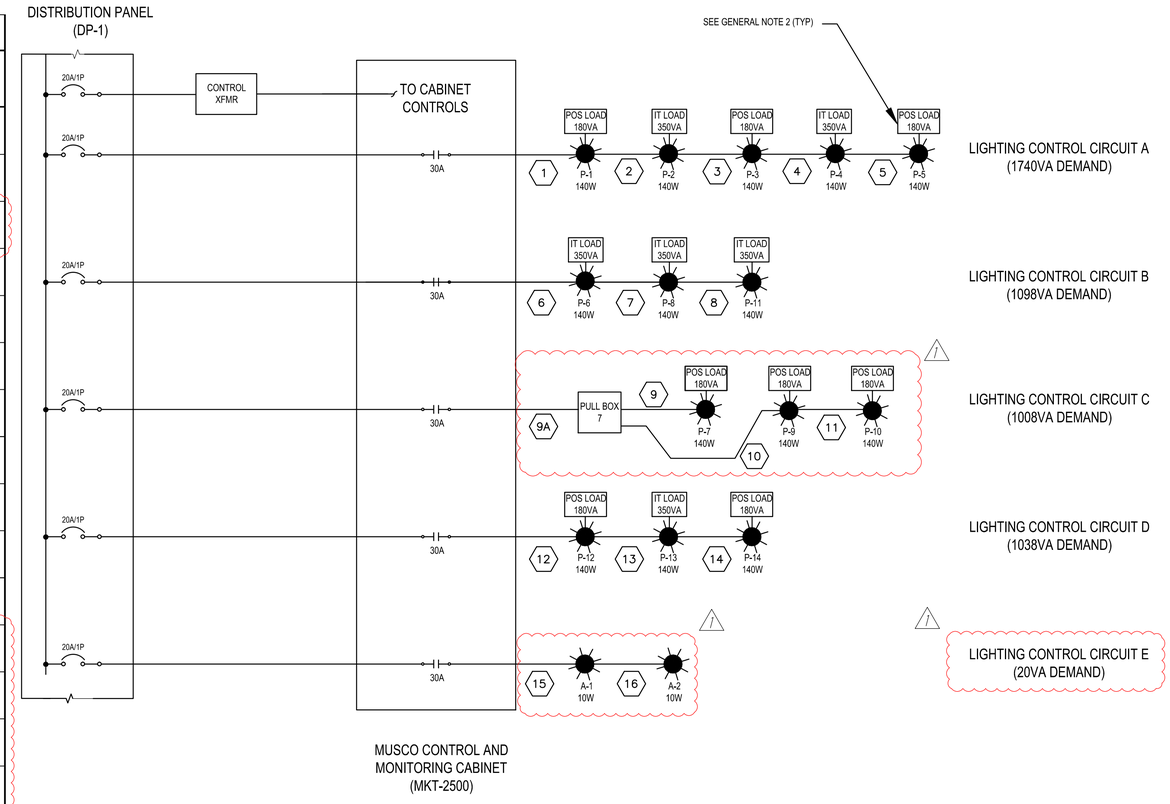

LIGHTING CONTROL CIRCUIT DIAGRAM

SHEET FEEDER SCHEDULE

TAG	CABLE AND CONDUIT	LOAD AMPERAGE	CABLE LENGTH	NOTES
1	2#2 AWG, 1#8 GND, 1" C	16.83 AMPS	400 FEET	CABLE SIZE INCREASED DUE TO VOLTAGE DROP
2	2#4 AWG, 1#10 GND, 1" C	14.03 AMPS	95 FEET	CABLE SIZE INCREASED DUE TO VOLTAGE DROP
3	2#4 AWG, 1#10 GND, 1" C	9.83 AMPS	95 FEET	CABLE SIZE INCREASED DUE TO VOLTAGE DROP
4	2#4 AWG, 1#10 GND, 1" C	7.02 AMPS	95 FEET	CABLE SIZE INCREASED DUE TO VOLTAGE DROP
5	2#4 AWG, 1#10 GND, 1" C	2.80 AMPS	95 FEET	CABLE SIZE INCREASED DUE TO VOLTAGE DROP
6	2#1 AWG, 1#8 GND, 1-1/4" C	12.5 AMPS	840 FEET	CABLE SIZE INCREASED DUE TO VOLTAGE DROP
7	2#2 AWG, 1#8 GND, 1-1/4" C	8.33 AMPS	200 FEET	CABLE SIZE INCREASED DUE TO VOLTAGE DROP
8	2#2 AWG, 1#8 GND, 1-1/4" C	4.17 AMPS	170 FEET	CABLE SIZE INCREASED DUE TO VOLTAGE DROP
9A	2#2 AWG, 1#8 GND, 1" C	8.00 AMPS	850 FEET	CABLE SIZE INCREASED DUE TO VOLTAGE DROP
9	2#2 AWG, 1#8 GND, 1" C	2.67 AMPS	80 FEET	CABLE SIZE INCREASED DUE TO VOLTAGE DROP
10	2#2 AWG, 1#8 GND, 1" C	5.33 AMPS	80 FEET	CABLE SIZE INCREASED DUE TO VOLTAGE DROP
11	2#8 AWG, 1#10 GND, 1" C	2.67 AMPS	80 FEET	CABLE SIZE INCREASED DUE TO VOLTAGE DROP
12	2#1 AWG, 1#8 GND, 1-1/4" C	9.82 AMPS	1140 FEET	CABLE SIZE INCREASED DUE TO VOLTAGE DROP
13	2#2 AWG, 1#8 GND, 1-1/4" C	7.02 AMPS	90 FEET	CABLE SIZE INCREASED DUE TO VOLTAGE DROP
14	2#2 AWG, 1#8 GND, 1-1/4" C	2.08 AMPS	90 FEET	CABLE SIZE INCREASED DUE TO VOLTAGE DROP
15	2#12 AWG, 1#12 GND, 1" C	0.5 AMPS	1340 FEET	
16	2#12 AWG, 1#12 GND, 1" C	0.5 AMPS	20 FEET	

GENERAL SHEET NOTES

1. THE DESIGN INTENT FOR THE LIGHTING CONTROL IS AS FOLLOWS; THE LIGHTING SHALL BE CONTROLLED VIA THE LIGHTING CONTROL PANEL CONTACTOR AND INDIVIDUAL PHOTOCELL. PHOTOCELLS ARE INTEGRAL TO EACH LUMINAIRE. RECEPTACLES FOR THE IT AND POS LOADS SHALL BE WIRED AHEAD OF THE PHOTOCELL. RECEPTACLES WILL BE FULLY POWERED ONLY WHEN THE CONTACTOR IS CLOSED AT THE LIGHTING CONTROL PANEL.
2. CABLE TO POS AND IT LOADS SHALL BE REDUCED VIA SPLICE TO ACCOMMODATE LUG SIZE ON RECEPTACLES. MINIMUM CABLE SIZE ALLOWED IS #12AWG.

REVISIONS		
NO.	DESCRIPTION	DATE
1	ADDENDUM 1	4/19/18

CALCULATED LMC
CHECKED SDS

CIRCUIT DIAGRAM AND FEEDER SCHEDULE

COFFMAN PARK

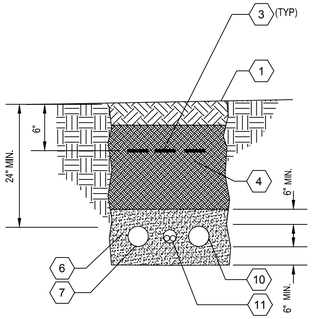

SECTION 'A'

B1 LIGHTING AND TELECOM TRENCH

N.T.S

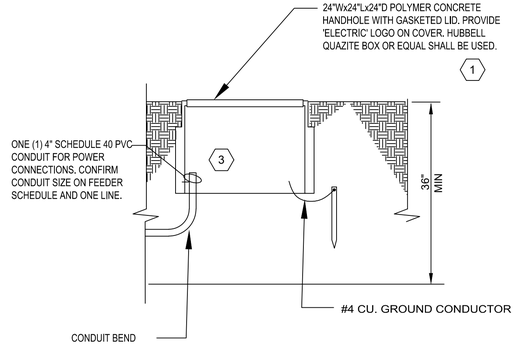

PULL BOX TYPE A

N.T.S.

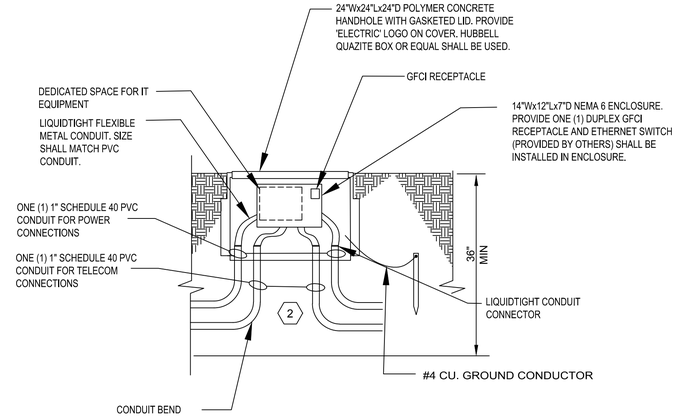

PULL BOX TYPE B

N.T.S.

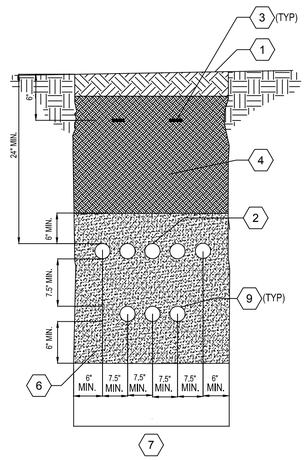

SECTION 'B'

B2 POWER CABLE TRENCH

N.T.S

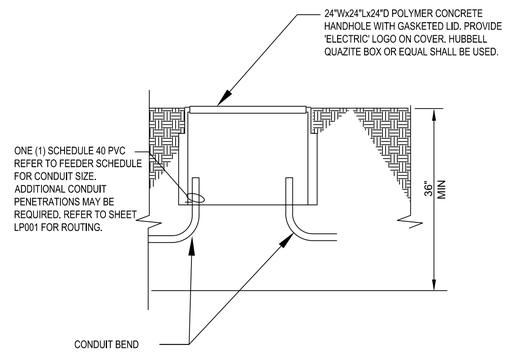

PULL BOX TYPE C

N.T.S.

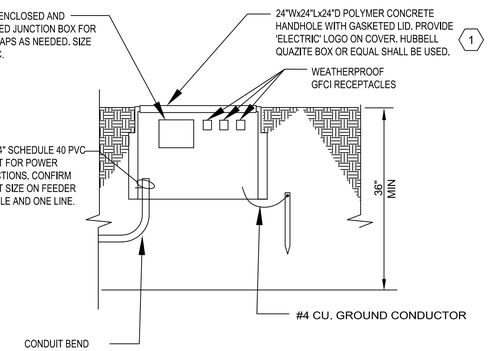

PULL BOX TYPE D

N.T.S.

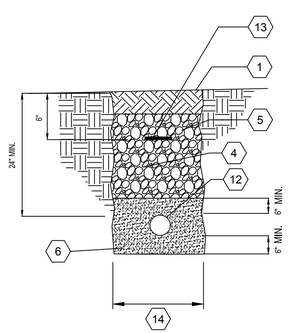

SECTION 'C'

B3 SINGLE CONDUIT TRENCH DETAIL ELECTRICAL OR TELECOM

N.T.S

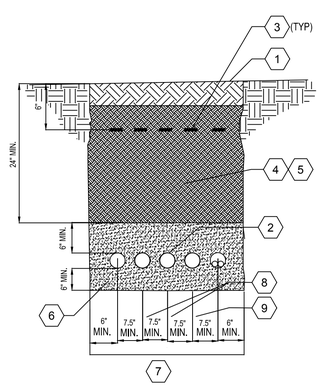

SECTION 'D'

B4 LIGHTING AND TELECOM TRENCH

N.T.S

REVISIONS		
NO.	DESCRIPTION	DATE
1	ADDENDUM 1	4/19/18

GENERAL NOTES FOR THIS SHEET

1. ALL ELECTRICAL WORK PERFORMED SHALL BE IN ACCORDANCE WITH THE LATEST EDITION OF THE NATIONAL ELECTRIC CODE(NEC), WHICH IS PUBLISHED BY THE NATIONAL FIRE PROTECTION ASSOCIATION (NFPA) AND IS A UNITED STATES STANDARD FOR THE SAFE INSTALLATION OF ELECTRICAL WIRING AND EQUIPMENT, AND ALL STATE OR LOCAL CODES THAT MAY APPLY.
2. THE CONTRACTOR/OWNER/DEVELOPER SHALL SUBMIT MANUFACTURER'S SPECIFICATION SHEETS TO THE CITY ENGINEER FOR APPROVAL PRIOR TO INSTALLATION. MANUFACTURER'S SPECIFICATION SHEETS ARE REQUIRED FOR THE FOLLOWING ITEMS:

   LUMINAIRE
   POLE
   SERVICE ENCLOSURE
   DISTRIBUTION PANELS
   HAND HOLES
   CABLE
   CONDUIT
   RECEPTACLES AND ENCLOSURES
   ALL OTHER RELATED ELECTRICAL ITEMS
3. ALL TRENCHING AND BACKFILL BY E.C.
4. TELECOMMUNICATIONS CONDUIT SHALL BE 2" PVC CONDUIT. TWO (2) 3/4" INNERDUCTS SHALL BE PROVIDED IN CONDUIT. PROVIDE PULL STRINGS IN INNERDUCTS AND CONDUIT.
5. NOT ALL TRENCH LAYOUTS ARE PROVIDED. REFER TO TRENCH SECTION B (DETAIL B2) FOR REQUIRED CONDUIT SPACING.
6. DIRECTIONAL BORING IS PERMITTED IN LIEU OF TRENCHING PER THE PAY ITEM NOTE ON SHEET 4 . 1

PULL BOX KEY NOTES

1. ONE(1) SPARE HANDHOLE LID SHALL BE PROVIDED. THE SPARE LID SHALL HAVE A 4" OPENING FOR CABLE CONNECTIONS.
2. PROVIDE (1) ONE GFCI , 20A, DUPLEX RECEPTACLES IN THIS PULL BOX. DIN RAIL SHALL BE MOUNTED TO THE INSIDE WALL OF THE PULL BOX. RECEPTACLES SHALL BE MOUNTED TO DIN RAIL IN A WEATHER ENCLOSURE WITH WHILE IN USE COVER. ALL PENETRATIONS MADE IN PULL BOX SHALL BE SEALED TO ENSURE NO WATER SEEPAGE. COORDINATE WITH CITY OF DUBLIN IT DEPARTMENT PRIOR TO INSTALLATION.
3. TYPE A PULL BOX SHALL HAVE 2 FEET OF INCOMING CABLE SLACK COILED UP IN BOX. POWER CABLE SHALL CONNECT TO TYPE W CABLE SIZED PER THE AMPERAGE OF THE LOAD. THE CONNECTION TO TYPE W CABLE SHALL BE MADE VIA CABLE REDUCER SPLICES. PROVIDE 5 FEET OF TYPE W SLACK IN THE PULL BOX. HUBBELL TYPE CAM LOK (OR APPROVED EQUAL) AND CAPS SHALL BE PROVIDED AT THE ENDS OF THE TYPE W CABLE. CAM LOKS CONNECTORS SHALL BE AS FOLLOWS; 1-GREEN MALE , 1- WHITE FEMALE, 1-BLUE FEMALE, 1-BLACK FEMALE, AND 1-RED FEMALE.
4. PROVIDE CABLE REDUCERS OR TAPS IN HANDHOLE TO REDUCE WIRE GAUGE TO #12 PRIOR TO ENTERING RECEPTACLES. RECEPTACLES SHALL BE 20A, 120V, GFI DUPLEX TYPE IN WEATHER PROOF ENCLOSURE. WHILE IN USE COVERS SHALL BE PROVIDED FOR EACH ENCLOSURE. RECEPTACLES SHALL BE MOUNTED TO THE INSIDE OF THE HANDHOLE. ENSURE ALL PENETRATIONS ARE WATER SEALED.

TRENCH DETAIL KEY NOTES

1. TOPSOIL AND SEED .
2. PROVIDE SWEEPING NON-ACUTE ANGLED BENDS FOR ALL CONDUITS.
3. DETECTABLE WARNING TAPE RED WITH BLACK LETTERING INDICATING "ELECTRIC" AND ROUTED ALONG CONDUIT PATH.
4. CLEAN NATIVE MATERIALS MAY BE USED FOR BACKFILL IN LANDSCAPED AREAS. MATERIALS SHALL BE FREE OF STONES, RUBBLE, AND FROZEN BACKFILL; OTHERWISE, CONTRACTOR SHALL BRING IN CLEAN BACKFILL. COMPACT BACKFILL IN LIFTS.
5. GRANULAR BACKFILL TO BE USED UNDER PAVEMENT AND IN RIGHT OF WAY, TO A DEPTH PER CITY OF DUBLIN STANDARDS, WITH COMPACTED BACKFILL FOR REMAINDER PER CITY OF DUBLIN STANDARDS.
6. SAND BEDDING.
7. VERIFY WIDTH OF TRENCH REQUIRED. REFER TO SINGLE LINE DIAGRAM ON SHEET E-601 AND FEEDER SCHEDULE ON SHEET LB-002 FOR CONDUIT FILL.
8. NOT USED.
9. NUMBER OF CONDUIT SHOWN IS FOR REFERENCE ONLY. REFER TO DRAWINGS FOR NUMBER OF CONDUITS REQUIRED FOR THIS TRENCH. SPACING SHOWN SHALL BE MAINTAINED. PROVIDE SWEEPING NON-ACUTE ANGLED BENDS FOR ALL CONDUITS.
10. PVC SCHEDULE 40 (MINIMUM). SEE ELECTRICAL SITE PLANS FOR SIZE AND QUANTITY OF CONDUITS REQUIRED ALONG TRENCH. IF MULTIPLE CONDUITS ARE ROUTED TOGETHER IN A COMMON TRENCH, PROVIDE 6" (MINIMUM) OF SOIL SEPARATION BETWEEN THE EXTERIOR OF EACH CONDUIT.
11. 2" PVC SCHEDULE 40 WITH TWO (2) 3/4" INNERDUCTS WITH NYLON PULLSTRINGS - FIBER..
12. PVC SCHEDULE 40 (MINIMUM). SEE ELECTRICAL SITE PLANS FOR SIZE AND QUANTITY OF CONDUITS REQUIRED ALONG TRENCH. IF MULTIPLE CONDUITS ARE ROUTED TOGETHER IN A COMMON TRENCH, PROVIDE 6" (MINIMUM) OF SOIL SEPARATION BETWEEN THE EXTERIOR OF EACH CONDUIT.
13. DETECTABLE 6" WIDE WARNING TAPE RED WITH BLACK LETTERING INDICATING "ELECTRIC" FOR POWER FEEDS OR ORANGE WITH BLACK LETTERING INDICATING "COMMUNICATIONS LINE" FOR TELECOMMUNICATIONS AND ROUTED ALONG CONDUIT PATH.
14. EXCAVATE WIDTH OF TRENCH AS REQUIRED. REFER TO ELECTRICAL SITE PLAN ON SHEET 5 FOR ROUTING

CALCULATED LMC
CHECKED SDS

ELECTRICAL DETAILS AND GENERAL NOTES

COFFMAN PARK

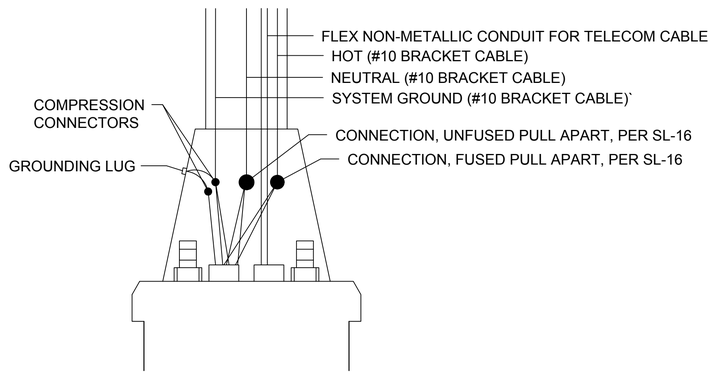

POLE WIRING DETAIL, 120V

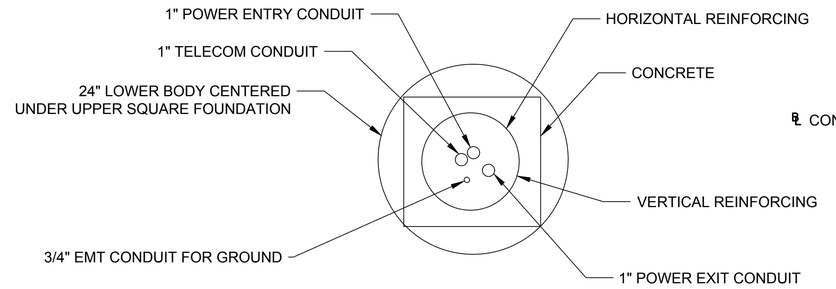

TOP VIEW

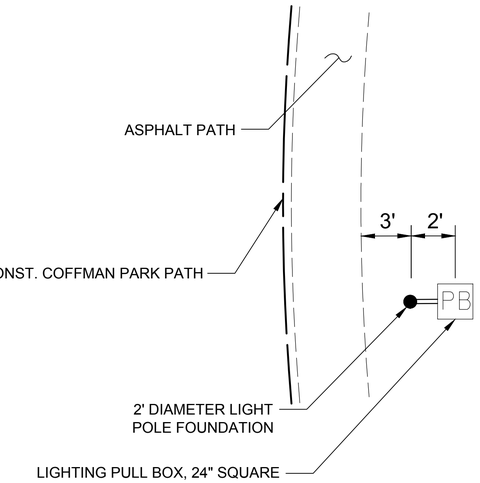

PULL BOX TYPE B LOCATION DETAIL

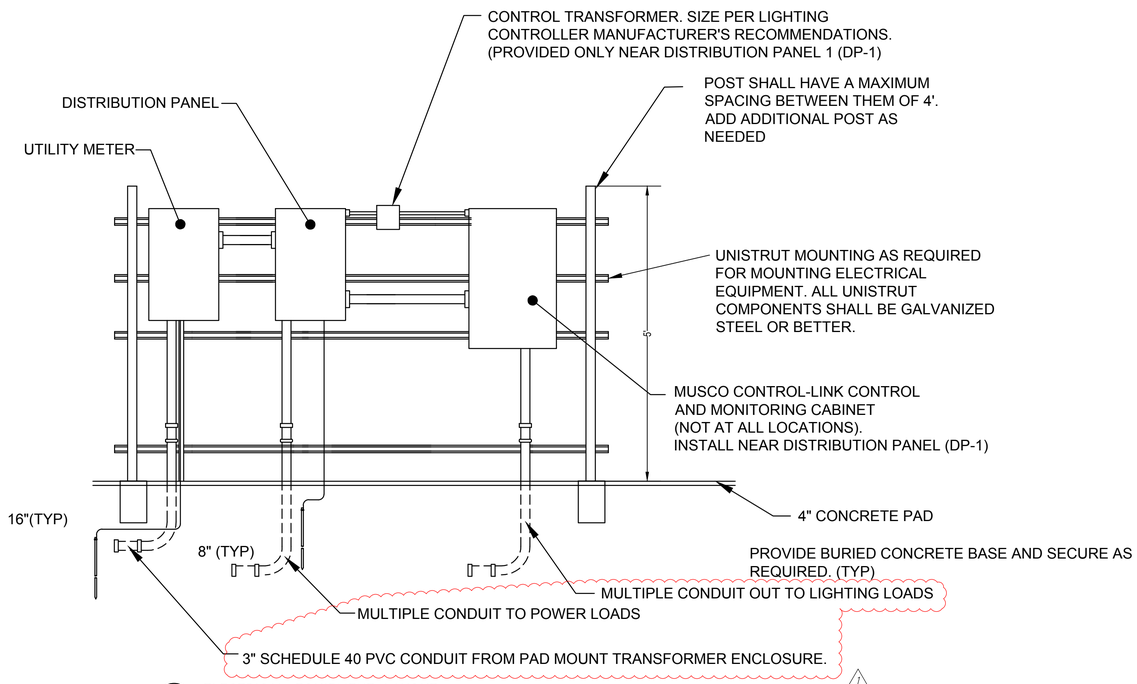

D1 ELECTRICAL EQUIPMENT LAYOUT
N.T.S.

NOTE: ALL EQUIPMENT SHALL BE PAINTED BLACK TO MEET FEDERAL SPECIFICATION NO. 595B AND CONFORM TO COLOR NO. 27038.

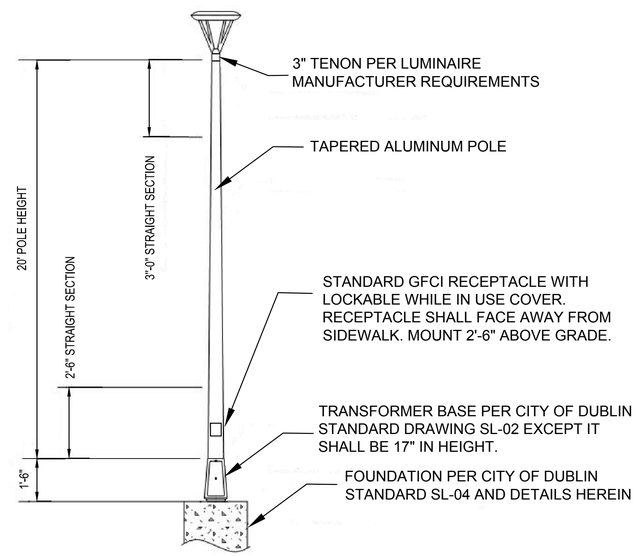

D2 POST TOP LIGHT POLE, AS PER PLAN
N.T.S.

NOTE: ALL EQUIPMENT SHALL BE POWDER COATED BLACK TO MEET FEDERAL SPECIFICATION NO. 595B AND CONFORM TO COLOR NO. 27038.

REVISIONS		
NO.	DESCRIPTION	DATE
1	ADDENDUM 1	4/19/18

HORIZONTAL SCALE IN FEET 0 30 60 120

CALCULATED LMC CHECKED SDS

ELECTRICAL DETAILS

COFFMAN PARK

QUANTITIES TABLE

ITEM	DESCRIPTION	QUANTITY	UNIT
	POWER		
	120V, 20A DUPLEX GFCI OUTLET ONLY	3	EACH
	WHILE IN USE COVERS FOR DUPLEX RECEPTACLE	3	EACH
	ELECTRICAL PANEL MOUNTING (INCLUDES UNISTRUT, BRACKETS, AND CONCRETE PAD) AS PER PLAN	4	EACH
	DISTRIBUTION PANEL, 480V, 200A BUS, 200A MCB, 12 SPACES, 3P, 4W, 65KAIC (BREAKERS PER PLAN)	1	EACH
	DISTRIBUTION PANEL, 208V, 1000A BUS, 800A MCB, 12 SPACES, 3P, 4W, 65KAIC (BREAKERS PER PLAN)	1	EACH
	DISTRIBUTION PANEL, 208V, 400A BUS, 400A MCB, 12 SPACES, 3P, 4W, 65 KAIC (BREAKERS PER PLAN)	1	EACH
	DISTRIBUTION PANEL, 208V, 800A BUS, 650A MCB, 12 SPACES, 3P, 4W, 65 KAIC (BREAKERS PER PLAN)	1	EACH
	METER SOCKETS	4	EACH
* 625	CONDUIT, 4", 725.051	1,690	FT
* 625	CONDUIT, 3", 725.051	20	FT
* 625	CONDUIT, 2-1/2", 725.051	609	FT
* 625	CONDUIT, 1-1/2", 725.051	320	FT
* 625	CONDUIT, 1", 725.051	885	FT
* 625	CONDUIT, MISC.: CONDUIT, SLEEVE, 6", SCH 80	124	FT
* 625	CONDUIT, JACKED OR DRILLED, 725.051, 6"	48	FT
* 625	NO. 500 KCMIL 600V DISTRIBUTION CABLE	6,860	FT
* 625	NO. 350 KCMIL 600V DISTRIBUTION CABLE	80	FT
* 625	NO. 250 KCMIL 600V DISTRIBUTION CABLE	1,280	FT
* 625	NO. 4/0 AWG 600V DISTRIBUTION CABLE	1,156	FT
* 625	NO. 4 AWG 600 VOLT DISTRIBUTION CABLE	1,770	FT
* 625	NO. 10 AWG 600V GROUND WIRE	885	FT
* 625	NO. 4 AWG 600V GROUND WIRE	779	FT
* 625	NO. 3 AWG 600V GROUND WIRE	1,445	FT
* 625	TRENCH, AS PER PLAN	2,197	FT
* 625	PLASTIC CAUTION TAPE	2,197	FT
* 625	POWER SERVICE, AS PER PLAN (INCLUDES CONTINGENCY FOR AEP CONNECTION/TRANSFORMERS)	4	EACH
	GROUND ROD (NON-LIGHTING)	8	EACH
* 625	PULL BOX, MISC.: PULL BOX, 725.06, 24" x 24" x 24" WITH COVER	16	EACH
* 625	PULL BOX, MISC.: PULL BOX COVER, 24" x 24" x 24"	8	EACH
	TYPE W WIRE #4/0	100	FT
	TYPE W WIRE #3	25	FT
	TYPE W WIRE #1	60	FT
	TYPE W WIRE #6	15	FT
	SERIES 1016 CAM LOCK #4/0 AWG	25	EACH
	SERIES 1016 CAM LOCK #3 AWG	5	EACH
	SERIES 1016 CAM LOCK #1 AWG	15	EACH
	SERIES 1016 CAM LOCK #6 AWG	3	EACH
	LIGHTING		
* 625	DISTRIBUTION CABLE, MISC.: NO. 1 AWG 600 VOLT DISTRIBUTION CABLE	2,920	FT
* 625	DISTRIBUTION CABLE, MISC.: NO. 2 AWG 600 VOLT DISTRIBUTION CABLE	4,880	FT
* 625	NO. 4 AWG 600 VOLT DISTRIBUTION CABLE	760	FT
* 625	NO. 8 AWG 600 VOLT DISTRIBUTION CABLE	320	FT
* 625	DISTRIBUTION CABLE, MISC.: NO. 12 AWG 600 VOLT DISTRIBUTION CABLE	3,920	FT
* 625	NO. 8 AWG 600V GROUND WIRE	4,000	FT
* 625	NO. 10 AWG 600V GROUND WIRE	1,425	FT
* 625	NO. 12 AWG 600V GROUND WIRE	1,420	FT
* 625	CONDUIT, JACKED OR DRILLED, 725.051, 4"	60	FT
* 625	TRENCH, AS PER PLAN	2,292	FT
* 625	PLASTIC CAUTION TAPE	2,292	FT
* 625	GROUND ROD	14	EACH
* 625	BARE COPPER TO GROUND ROD #6	300	FT
* 625	NO. 10 AWG POLE AND BRACKET CABLE	1,050	FT
* 625	CONDUIT, 1-1/4", 725.051	2,430	FT
* 625	CONDUIT, 1", 725.051	4,015	FT
* 625	CONNECTION, UNFUSED PULL APART	14	EACH
* 625	CONNECTION, UNFUSED PERMANENT	14	EACH
* 625	CONNECTION, FUSED PULL APART	14	EACH
* 625	PULL BOX, MISC.: PULL BOX, 725.06, 24" x 24" x 24" WITH COVER	11	EACH
	120V, 20A DUPLEX GFCI OUTLET ONLY	6	EACH
* 625	LIGHTING, MISC.: ART LIGHTING	2	EACH
* 625	T-BASE	14	EACH
* 625	LIGHT POLE AND LUMINAIRE (PHOTOCELL BUFFER ADDED)	14	EACH
* 625	LIGHT POLE FOUNDATION	14	EACH
* 625	LIGHTING CONTROL SYSTEM	1	LS
	FIBER		
625	CONDUIT, 2", 725.051	1,368	FT
	NEMA 6 ENCLOSURE	6	EACH
* 625	PULL BOX, MISC.: PULL BOX, 725.06, 24" x 24" x 24" WITH COVER	7	EACH
* 625	PLASTIC CAUTION TAPE	942	FT
* 625	TRENCH, AS PER PLAN	942	FT
* 625	GROUND ROD	7	EACH
* 625	CONDUIT, MISC.: INNERDUCT, 1"	2,736	FT
	POWER (PULL BOXES 7 & 8)		
	METER SOCKETS	1	EACH
	ELECTRICAL PANEL MOUNTING (INCLUDES UNISTRUT, BRACKETS, AND CONCRETE PAD) AS PER PLAN	1	EACH
	DISTRIBUTION PANEL, 208V, 800A BUS, 800A MCB, 12 SPACES, 3P, 4W, 65 KAIC (BREAKERS PER PLAN)	1	EACH
625	PULL BOX, MISC.: PULL BOX, 725.06, 24" x 24" x 24" WITH COVER	3	EACH
625	PULL BOX, MISC.: PULL BOX COVER, 24" x 24" x 24"	2	EACH
	GROUND ROD (NON-LIGHTING)	2	EACH
625	CONDUIT, 2-1/2", 725.051	390	FT
625	CONDUIT, 4", 725.051	20	FT
625	NO. 4/0 AWG 600V DISTRIBUTION CABLE	1,560	FT
626	NO. 4 AWG 600V GROUND WIRE	390	FT
625	NO. 500 KCMIL 600V DISTRIBUTION CABLE	100	FT
	SERIES 1016 CAM LOCK #1 AWG	8	EACH
	SERIES 1016 CAM LOCK #6 AWG	2	EACH
	TYPE W WIRE #1	40	FT
	TYPE W WIRE #6	10	FT
625	TRENCH, AS PER PLAN	493	FT
625	PLASTIC CAUTION TAPE	493	FT
625	POWER SERVICE, AS PER PLAN (INCLUDES CONTINGENCY FOR AEP CONNECTION/TRANSFORMERS)	1	EACH

STATIONING TABLES

LIGHT POLES

ITEM #	STATION	SIDE	OFFSET
POLE P-1	0+42.2	LT	14.9'
POLE P-2	1+33.7	LT	15.2'
POLE P-3	2+27.0	LT	15.0'
POLE P-4	3+19.4	LT	14.0'
POLE P-5	4+10.7	LT	14.2'
POLE P-6	5+00.6	LT	14.5'
POLE P-7	5+71.0	LT	55.9'
POLE P-8	6+04.6	LT	141.7'
POLE P-9	6+26.0	LT	60.2'
POLE P-10	5+96.3	RT	4.3'
POLE P-11	6+84.4	LT	22.8'
POLE P-12	7+71.3	LT	15.2'
POLE P-13	8+63.5	LT	15.6'
POLE P-14	9+52.7	LT	14.5'

DISTRIBUTION PANELS

ITEM #	STATION	SIDE	OFFSET
DISTRIBUTION PANEL (208-DP2)	2+00.8	RT	449.3'
DISTRIBUTION PANEL (208-DP3)	3+51.3	RT	559.7'
DISTRIBUTION PANEL (208-DP4)	8+29.5	RT	121.4'

POWER PULL BOXES

ITEM #	STATION	SIDE	OFFSET
PULL BOX 1A, TYPE A	3+94.1	RT	462.9'
PULL BOX 1B, TYPE A	3+95.3	RT	470.6'
PULL BOX 2, TYPE A	7+83.8	RT	266.6'
PULL BOX 3, TYPE A	0+60.6	LT	182.7'
PULL BOX 4A, TYPE A	3+35.3	LT	60.4'
PULL BOX 4B, TYPE A	3+31.3	RT	37.3'
PULL BOX 5, TYPE A	10+09.4	LT	46.2'
PULL BOX 6, TYPE A	0+22.9	RT	106.1'
PULL BOX 7, TYPE A	2+73.9	RT	372.3'
PULL BOX 8, TYPE A	1+79.6	RT	327.4'
PULL BOX 9, TYPE D	5+99.7	LT	74.6'
PULL BOX 10, TYPE A	0+19.4	LT	122.6'

FIBER PULL BOXES

ITEM #	STATION	SIDE	OFFSET
FIBER PULL BOX 4	0+31.1	LT	36.0'
FIBER PULL BOX 5	3+06.6	LT	28.8'
FIBER PULL BOX 6	4+86.0	LT	28.5'
FIBER PULL BOX 7	6+75.3	LT	30.9'

LIGHTING PULL BOXES

ITEM #	STATION	SIDE	OFFSET
PULL BOX 1, TYPE B	1+33.7	LT	17.2'
PULL BOX 2, TYPE B	3+19.4	LT	16.0'
PULL BOX 3, TYPE B	5+00.6	LT	16.5'
PULL BOX 4, TYPE B	6+84.4	LT	24.8'
PULL BOX 5, TYPE B	8+63.5	LT	17.6'
PULL BOX 6, TYPE C	9+30.1	LT	42.6'
PULL BOX 7, TYPE C	5+15.9	LT	34.2'
PULL BOX 8, TYPE C	6+71.1	LT	42.1'
PULL BOX 9, TYPE B	6+06.6	LT	141.7'
PULL BOX 10, TYPE C	0+28.4	LT	22.2'
PULL BOX 11, TYPE C	2+92.0	LT	37.5'

REVISIONS

NO.	DESCRIPTION	DATE
1	ADDENDUM 1	4/19/18

CALCULATED LMC
CHECKED SDS

QUANTITY AND COORDINATE TABLES

COFFMAN PARK

10
10

O:\2017\2017085\03 Coffman Park Electrical-Lighting-Data Extensions\Design\Lighting\Sheets\2017085.03-LQ001.dwg 19-Apr-18 7:59 AM