Myers Surveying Company, Inc.

2740 East Main Street, Columbus 43209 (Bexley), Ohio
614-235-8677 FAX: 614-235-4559

A Boundary Survey prepared for and certified to:
Christopher McCormick

Legal Description: Situated in Ohio, County of Franklin, City of Dublin, Being Part InLot 126 Village of Dublin, Plat Book 3, Page 199

Applicant:

Posted Address: 8 & 12 Bridge St., Dublin, Ohio

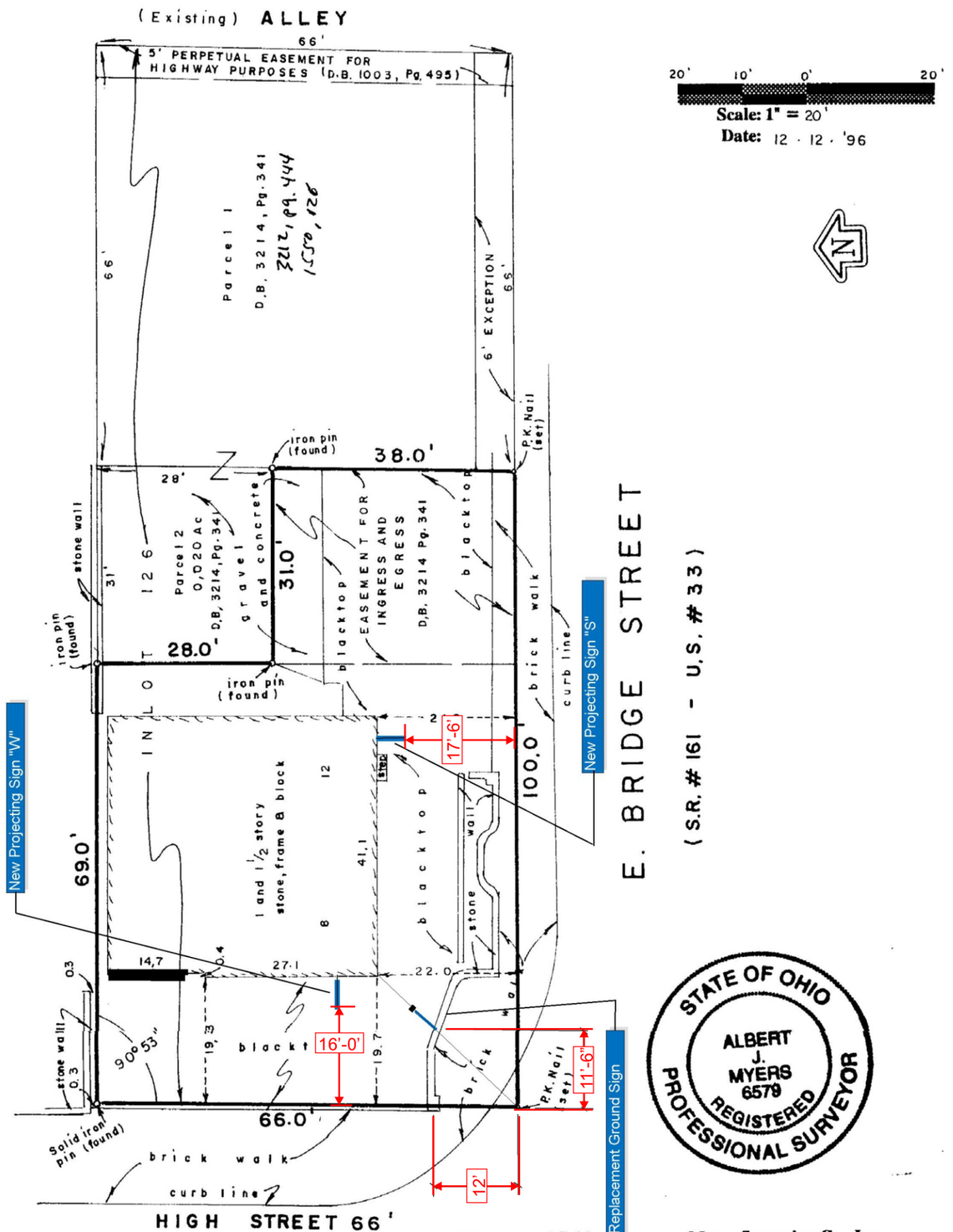

We hereby certify that the foregoing Boundary Survey was prepared from actual field measurements in accordance with Chapter 4733-37 Ohio Administrative Code. Iron pins set are 30"x1" O.D. with an orange plastic plug inscribed "P.S. 6579", unless otherwise noted. Basis of bearing is non-applicable

Myers Surveying Co., Inc.

By _____
Professional Surveyor

Myers Order No. - 21-12/02/96	Rec.	Field JN	DWG JN	Ltr. JN	ck.

DāNite Sign Co.

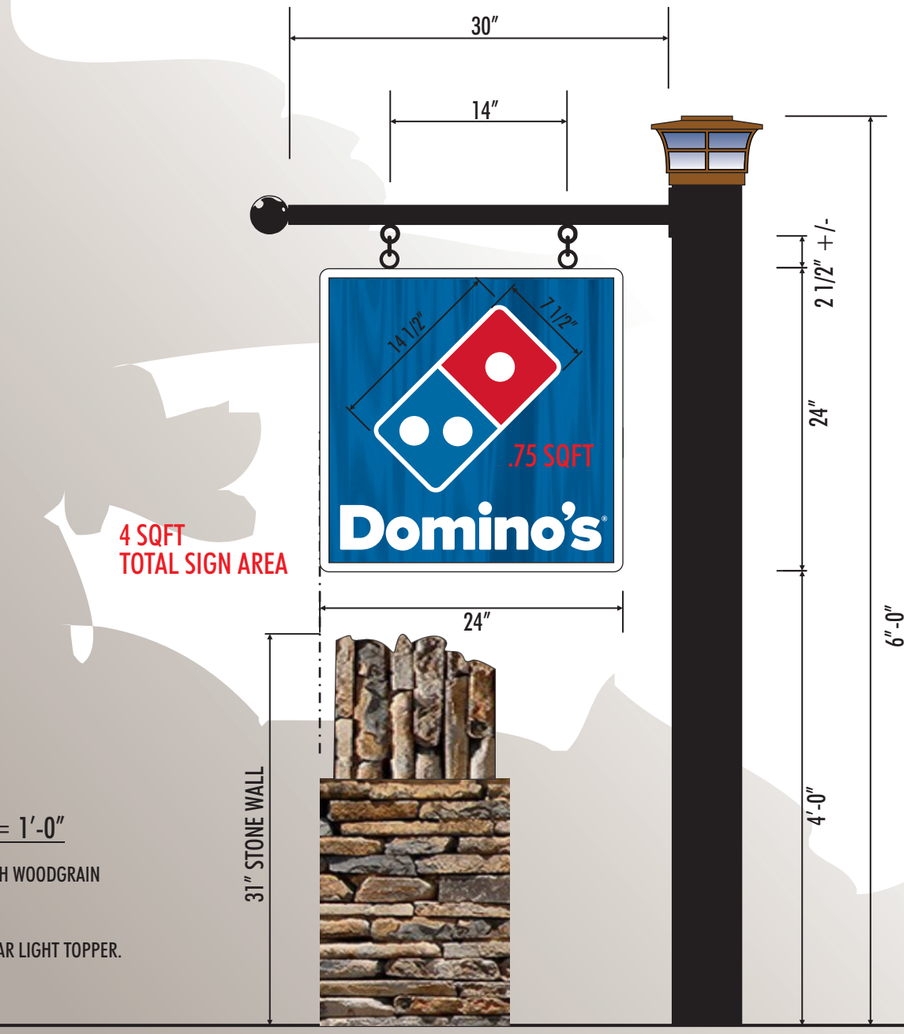

#S2-35003-R3: D/F NON-ILLUMINATED GROUND SIGN 1″ = 1′-0″

- SIGN: ROUTED HDU WITH ALL WHITE AREAS RAISED, BLUE BACKGROUND RECESSED WITH WOODGRAIN TEXTURE AND PAINTED PMS 307 BLUE. LOGO OVERLAID WITH BLUE AND RED VINYL.
- BRACKET: 33″ CLASSIC HANGING SIGN BRACKET - PAINTED BLACK.
- SUPPORT POST: 6" X 6" TREATED WOOD POST - PAINTED BLACK WITH DECORATIVE SOLAR LIGHT TOPPER.

DāNite Sign Co.
Proudly Serving Central Ohio Since 1954
1640 Harmon Ave Columbus, Ohio, 43223
(614) 444-3333 (FAX) 444-3026
www.danitesign.com

UL LISTED via STANDARD UL48
FILE NO:E60042 DaNITE SIGN CO.

For electrical illuminated signs. For non-illuminated signs, UL does not apply.

COLORS

- WHITE
- 3630-127 INTENSE BLUE VINYL (PMS 307 BLUE)
- 3630-33 RED VINYL (PMS 186 RED)
- BLACK

APPROVED-CUSTOMER DATE

JOB NAME	DOMINOS - DUBLIN OH #S2-35003-R3
STREET	8 EAST BRIDGE STREET
CITY, STATE	DUBLIN, OH
SIGN TYPE	NON-ILLUMINATED GROUND SIGN
DATE	8/24/18 REV DATE: 7/7/20
FILE NAME	DOMINOS - DUBLIN OH .CDR
DIRECTORY	GRAIG > DOMINOS

SCALE AS NOTED SALE MC DESIGNER TK

This project is an original unpublished design concept protected by copyright laws of The United States of America. Prior to sale or paid design fees, all visual materials, specifications, annexes and revisions remain the exclusive property of DaNite Sign Company. The use of any part herein to manufacture, sell or adopt this concept to other mediums by unauthorized parties constitutes an actionable plagiarism. ©

DāNite Sign Co.

DāNite Sign Co.

SIDE VIEW

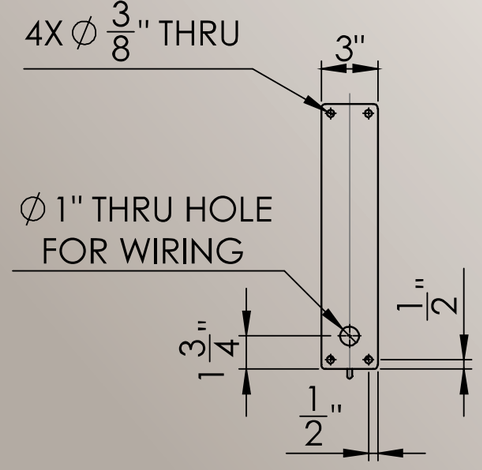

FRONT VIEW

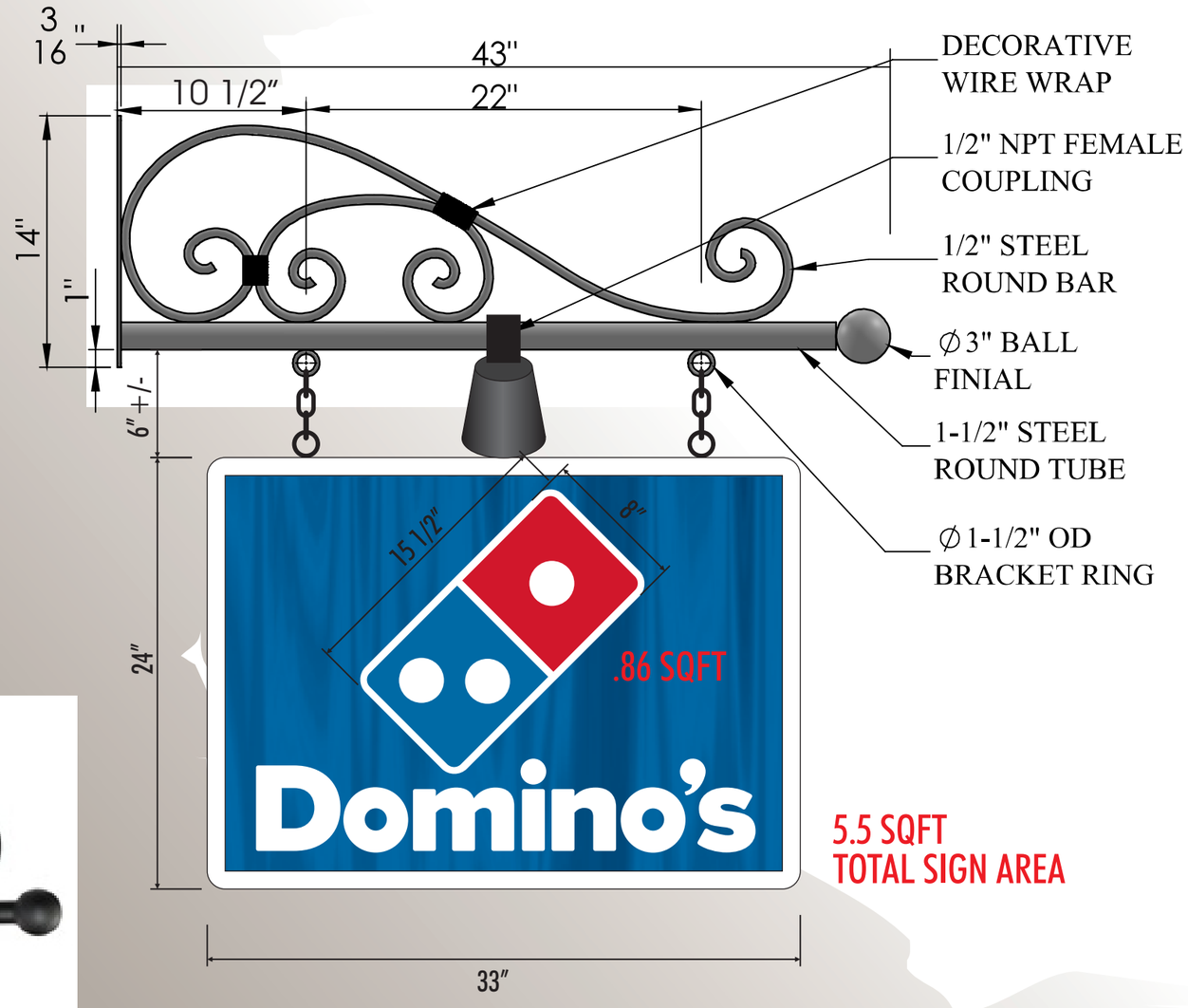

5.5 SQFT
TOTAL SIGN AREA

BRACKET WITH DOWN LIGHTING

#S1-35003-R3: D/F ILLUMINATED PROJECTING SIGN 1 1/2" = 1'-0"

- BRACKET: 43" CLASSIC LIGHTED SIGN BRACKET - PAINTED BLACK.
- SIGN: ROUTED HDU WITH ALL WHITE AREAS RAISED, BLUE BACKGROUND RECESSED WITH WOODGRAIN TEXTURE AND PAINTED PMS 307 BLUE. LOGO OVERLAID WITH BLUE AND RED VINYL.

DāNite Sign Co.
Proudly Serving Central Ohio Since 1954
1640 Harmon Ave Columbus, Ohio, 43223
(614) 444-3333 (FAX) 444-3026
www.danitesign.com

UL LISTED via STANDARD UL48
FILE NO:E60042 DaNITE SIGN CO.
For electrical illuminated signs. For non-illuminated signs, UL does not apply.

COLORS

- WHITE
- 3630-127 INTENSE BLUE VINYL (PMS 307 BLUE)
- 3630-33 RED VINYL
- BLACK

APPROVED-CUSTOMER DATE

JOB NAME	DOMINOS - DUBLIN OH	#S1-35003-R3
STREET	8 EAST BRIDGE STREET	
CITY, STATE	DUBLIN, OH	
SIGN TYPE	NON-ILLUMINATED PROJECTING SIGN	
DATE	8/24/18	REV DATE: 7/7/20
FILE NAME	DOMINOS - DUBLIN OH .CDR	
DIRECTORY	GRAIG > DOMINOS	

SCALE AS NOTED SALE MC DESIGNER TK

This project is an original unpublished design concept protected by copyright laws of The United States of America. Prior to sale or paid design fees, all visual materials, specifications, annexes and revisions remain the exclusive property of DaNite Sign Company. The use of any part herein to manufacture, sell or adapt this concept to other mediums by unauthorized parties constitutes an actionable plagiarism. ©

DāNite Sign Co.

SIDE VIEW

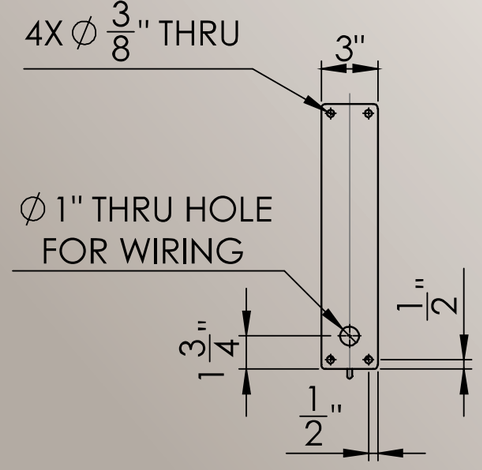

FRONT VIEW

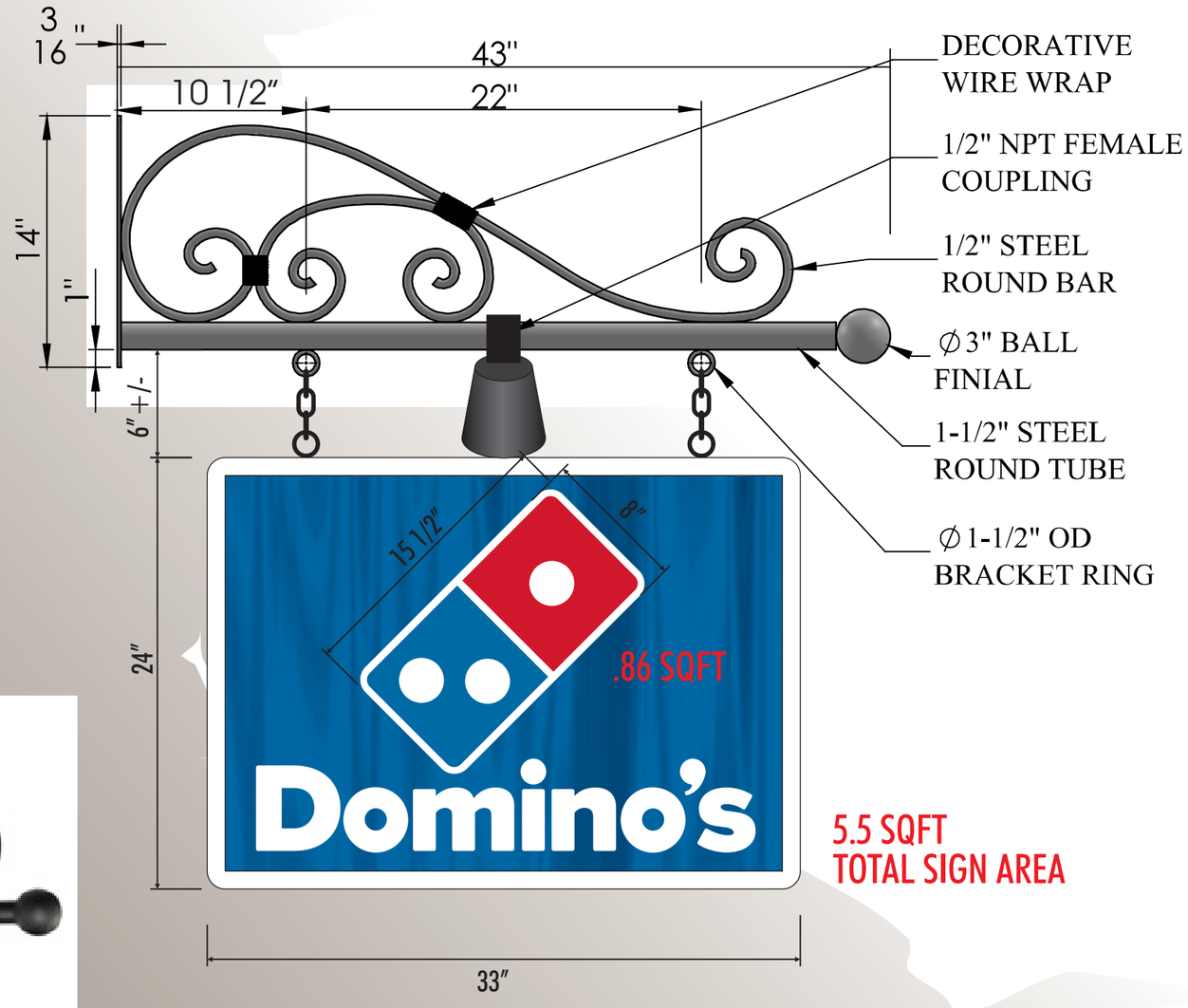

5.5 SQFT
TOTAL SIGN AREA

BRACKET WITH DOWN LIGHTING

#S1-35003-R3: D/F ILLUMINATED PROJECTING SIGN 1 1/2" = 1'-0"

- BRACKET: 43" CLASSIC LIGHTED SIGN BRACKET - PAINTED BLACK.
- SIGN: ROUTED HDU WITH ALL WHITE AREAS RAISED, BLUE BACKGROUND RECESSED WITH WOODGRAIN TEXTURE AND PAINTED PMS 307 BLUE. LOGO OVERLAID WITH BLUE AND RED VINYL.

DāNite Sign Co.
Proudly Serving Central Ohio Since 1954
1640 Harmon Ave Columbus, Ohio, 43223
(614) 444-3333 (FAX) 444-3026
www.danitesign.com

UL LISTED via STANDARD UL48
FILE NO:E60042 DaNITE SIGN CO.
For electrical illuminated signs. For non-illuminated signs, UL does not apply.

COLORS

- WHITE
- 3630-127 INTENSE BLUE VINYL (PMS 307 BLUE)
- 3630-33 RED VINYL
- BLACK

APPROVED-CUSTOMER DATE

JOB NAME	DOMINOS - DUBLIN OH	#S1-35003-R3
STREET	8 EAST BRIDGE STREET	
CITY, STATE	DUBLIN, OH	
SIGN TYPE	NON-ILLUMINATED PROJECTING SIGN	
DATE	8/24/18	REV DATE: 7/7/20
FILE NAME	DOMINOS - DUBLIN OH .CDR	
DIRECTORY	GRAIG > DOMINOS	

SCALE AS NOTED SALE MC DESIGNER TK

This project is an original unpublished design concept protected by copyright laws of The United States of America. Prior to sale or paid design fees, all visual materials, specifications, annexes and revisions remain the exclusive property of DaNite Sign Company. The use of any part herein to manufacture, sell or adapt this concept to other mediums by unauthorized parties constitutes an actionable plagiarism. ©

DāNite Sign Co.

12'-7"
3'-7" SIGN
9'-0"

EAST BRIDGE STREET ELEVATION 3/16" = 1'-0"

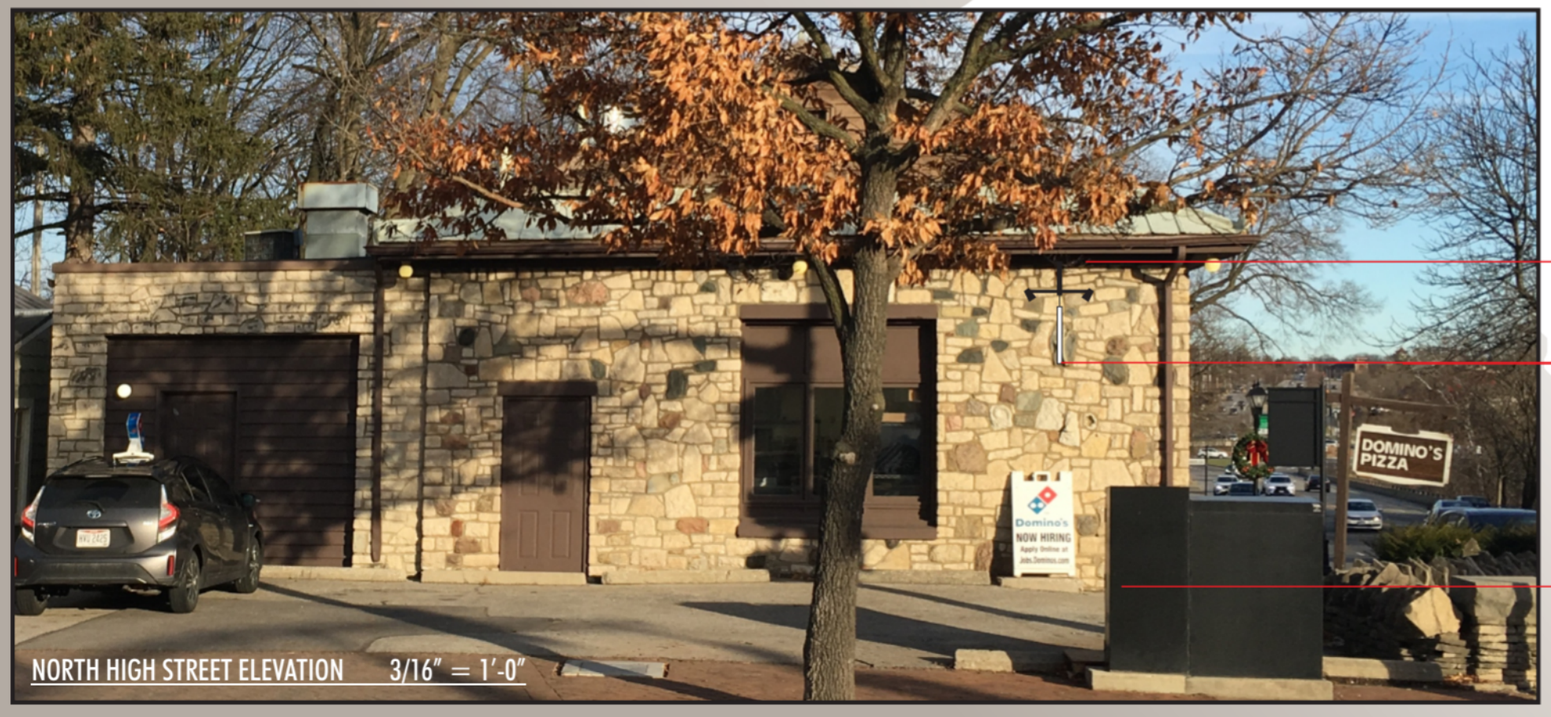

11'-7"
3'-7" SIGN
8'-0"

NORTH HIGH STREET ELEVATION 3/16" = 1'-0"

DāNite Sign Co.
Proudly Serving Central Ohio Since 1954
1640 Harmon Ave Columbus, Ohio, 43223
(614) 444-3333 (FAX) 444-3026
www.danitesign.com

UL LISTED via STANDARD UL48
FILE NO:E60042 DaNITE SIGN CO.
For electrical illuminated signs. For non-illuminated signs, UL does not apply.

COLORS

- WHITE
- 3630-127 INTENSE BLUE VINYL (PMS 307 BLUE)
- 3630-33 RED VINYL
- BLACK

APPROVED-CUSTOMER DATE

JOB NAME	DOMINOS - DUBLIN OH #S1-35003-R3
STREET	8 EAST BRIDGE STREET
CITY, STATE	DUBLIN, OH
SIGN TYPE	NON-ILLUMINATED PROJECTING SIGN
DATE	8/24/18 REV DATE: 7/7/20
FILE NAME	DOMINOS - DUBLIN OH .CDR
DIRECTORY	GRAIG > DOMINOS

SCALE AS NOTED SALE MC DESIGNER TK

This project is an original unpublished design concept protected by copyright laws of The United States of America. Prior to sale or paid design fees, all visual materials, specifications, annexes and revisions remain the exclusive property of DaNite Sign Company. The use of any part herein to manufacture, sell or adapt this concept to other mediums by unauthorized parties constitutes an actionable plagiarism. ©